SCHEMATIC DIAGRAM

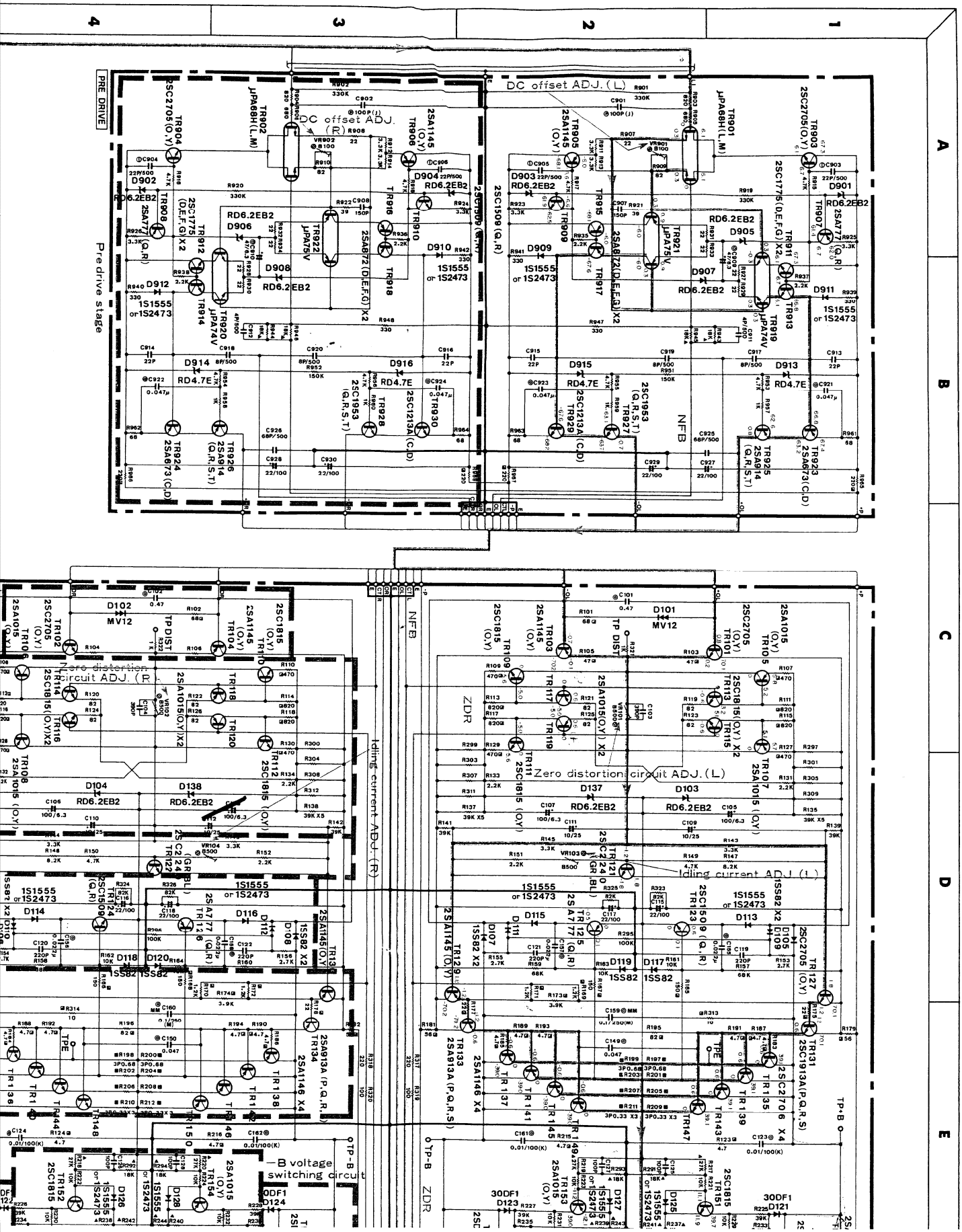

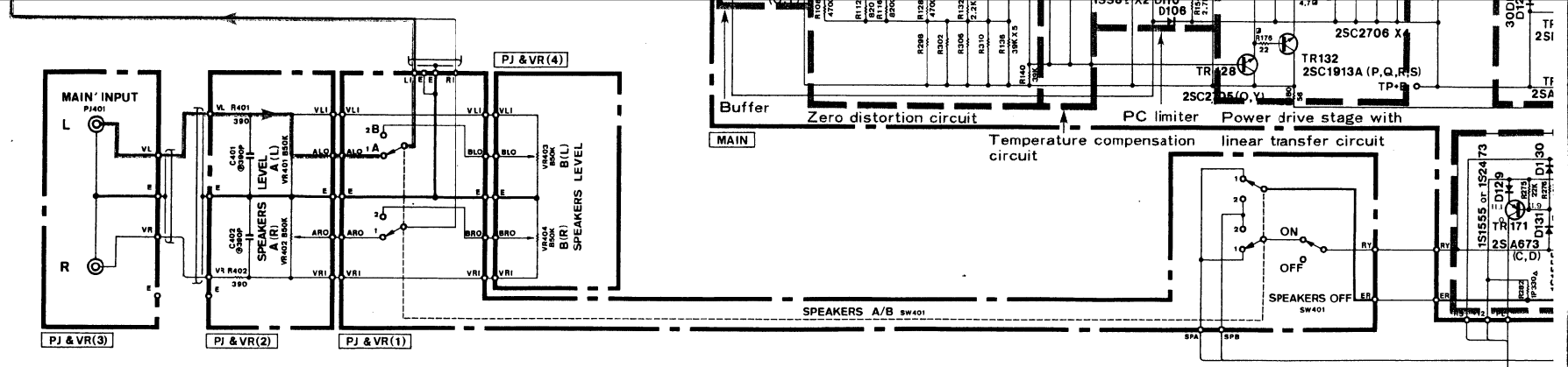

Australian & British models

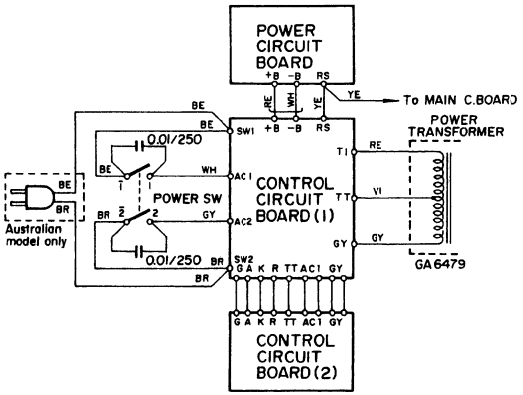

European model

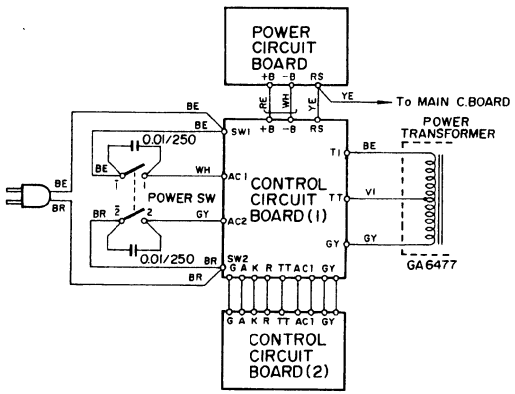

General model

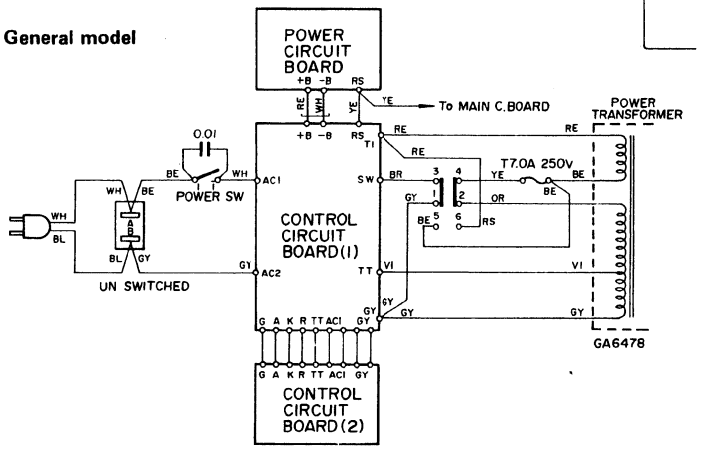

PIN CONNECTION DIAGRAM OF TRANSISTORS, DIODES AND ICS.

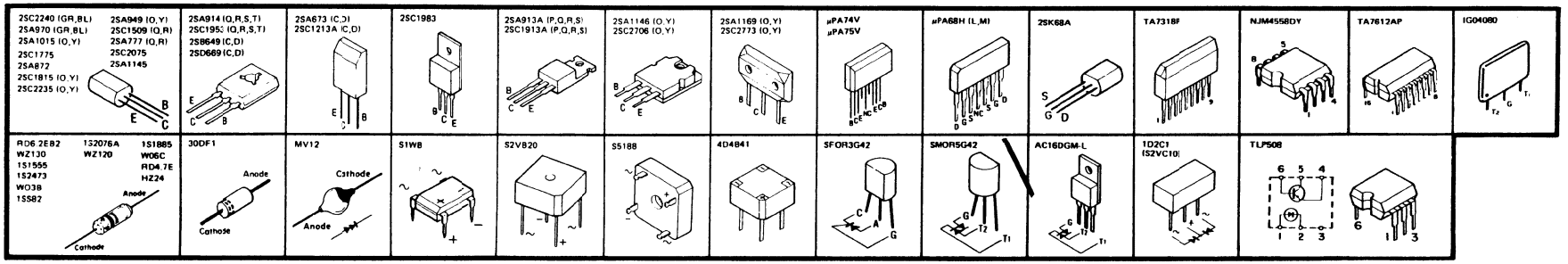

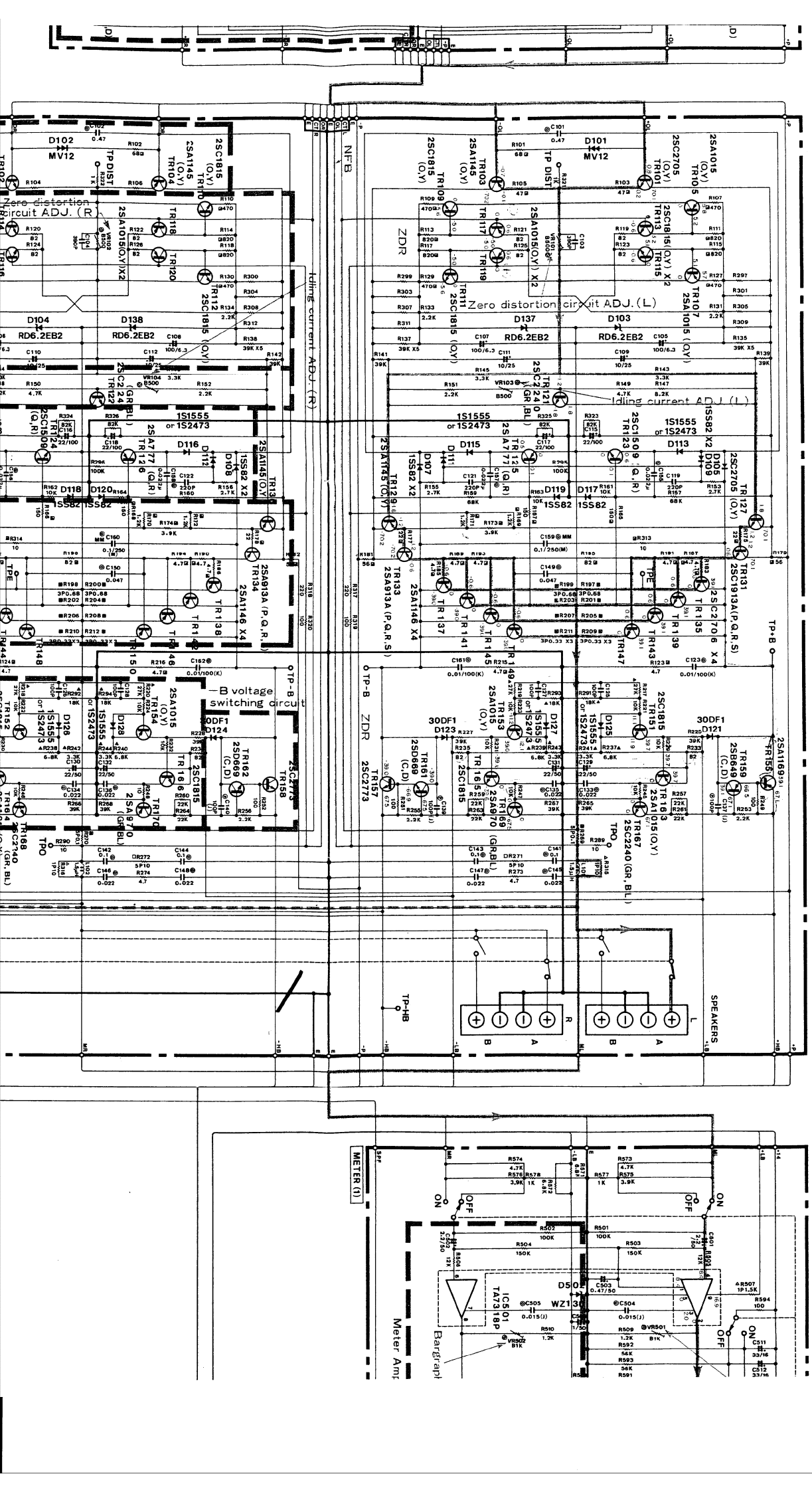
Zero distortion circuit ADJ. (R)
Idling current ADJ. (R)
Zero distortion circuit ADJ. (L)
Idling current ADJ. (L)
-B voltage switching circuit
NFB
ZDR
TPO
TP-B
TP-HB
SPEAKERS
METER (1)
Meter Amp
Bargraph
ON
OFF
C
D
E
F
G

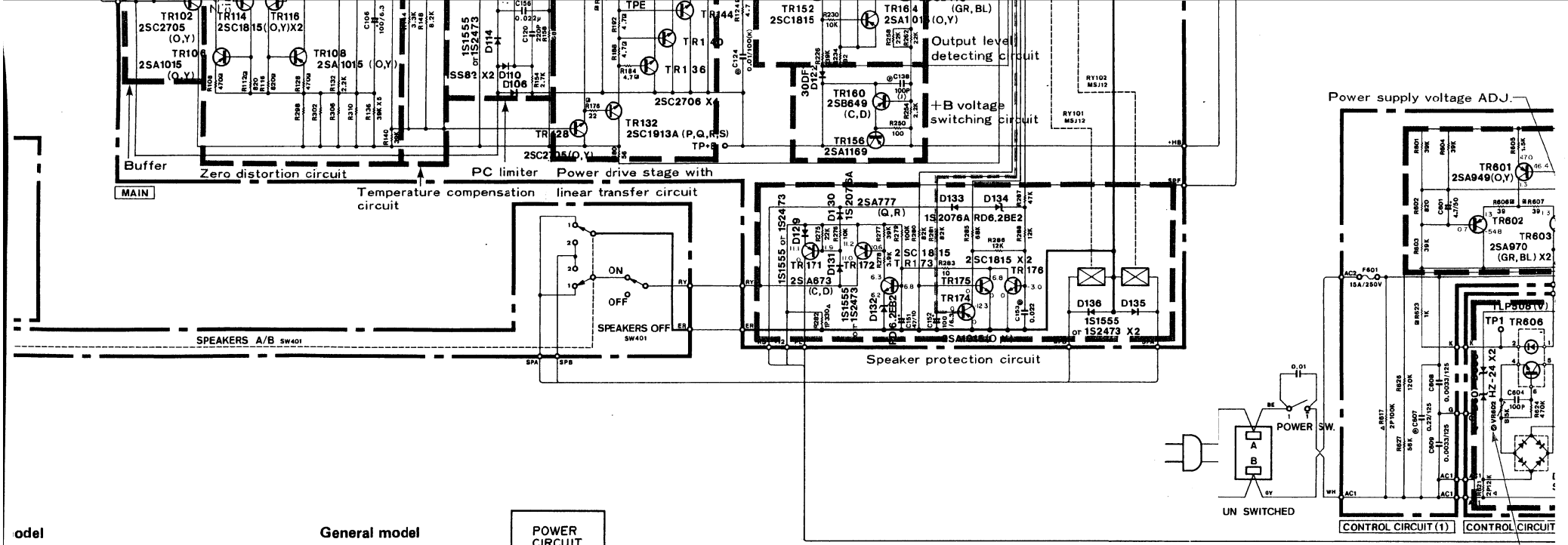

odel

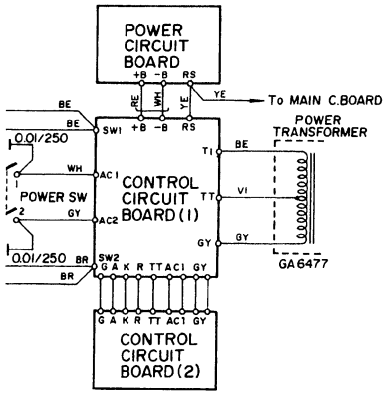

General model

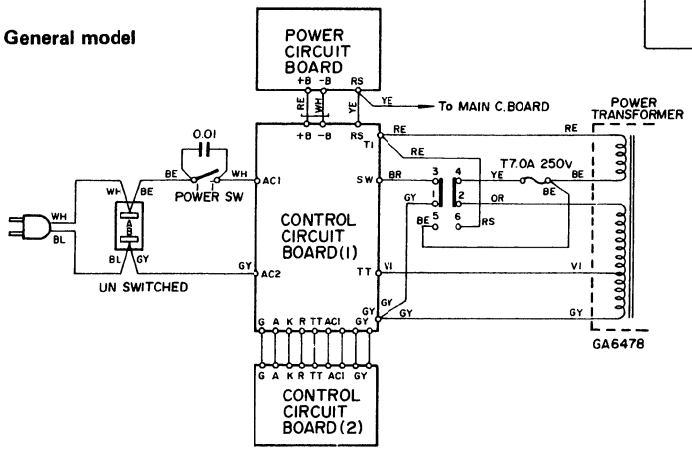

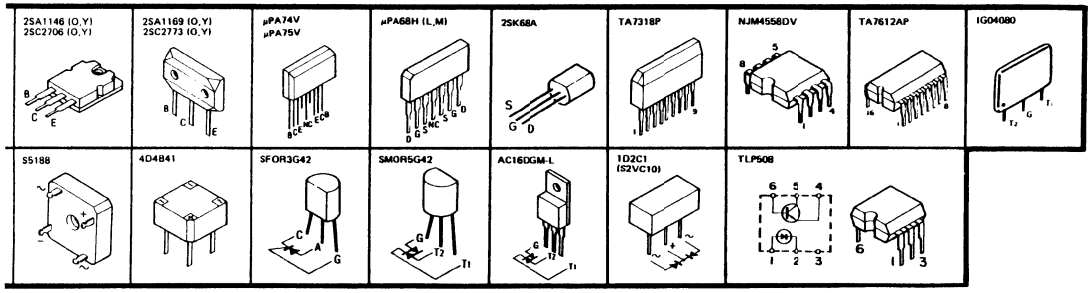

IC BLOCK & SCHEMATIC DIAGRAM

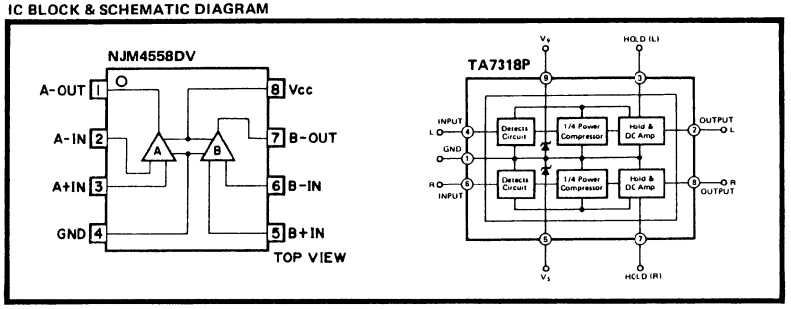

This schen
the follow
refer to th

No.
F701, 70

* All voltage
under no-si
* Schematic

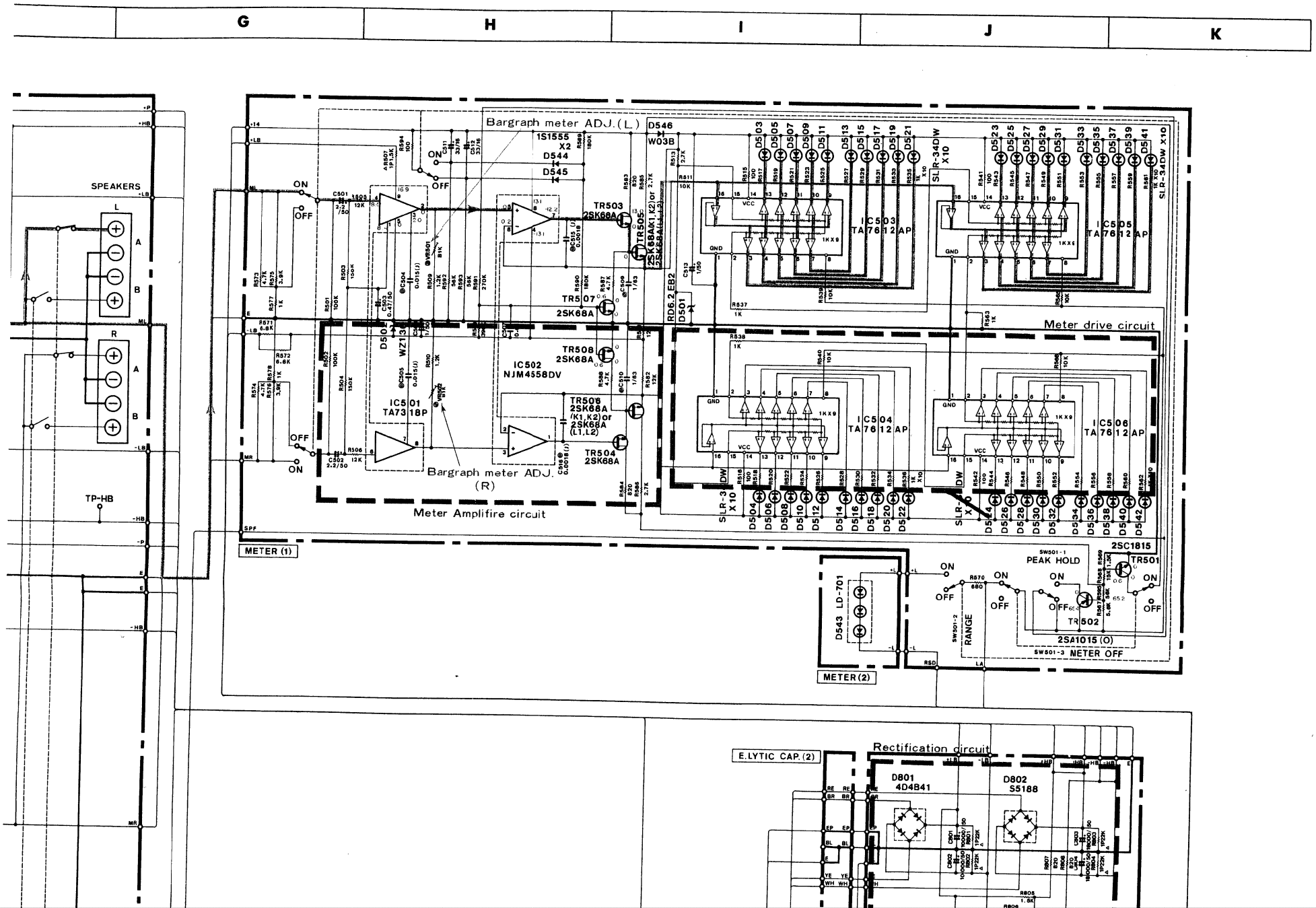
G
H
I
J
K
SPEAKERS
L
R
A
B
TP-HB
Bargraph meter ADJ.(L)
Bargraph meter ADJ.(R)
Meter Amplifire circuit
Meter drive circuit
IC501 TA7318P
IC502 NJM4558DV
IC503 TA7612AP
IC504 TA7612AP
IC505 TA7612AP
IC506 TA7612AP
TR503 2SK68A
TR505 2SK68A(K1,K2)or 2SK68A(L1,L2)
TR507 2SK68A
TR508 2SK68A
TR506 2SK68A(K1,K2)or 2SK68A(L1,L2)
TR504 2SK68A
TR501 2SC1815
TR502 2SA1015(O)
D543 LD-701
PEAK HOLD
RANGE
METER OFF
METER(1)
METER(2)
E.LYTIC CAP.(2)
Rectification circuit
D801 4D4B41
D802 S5188

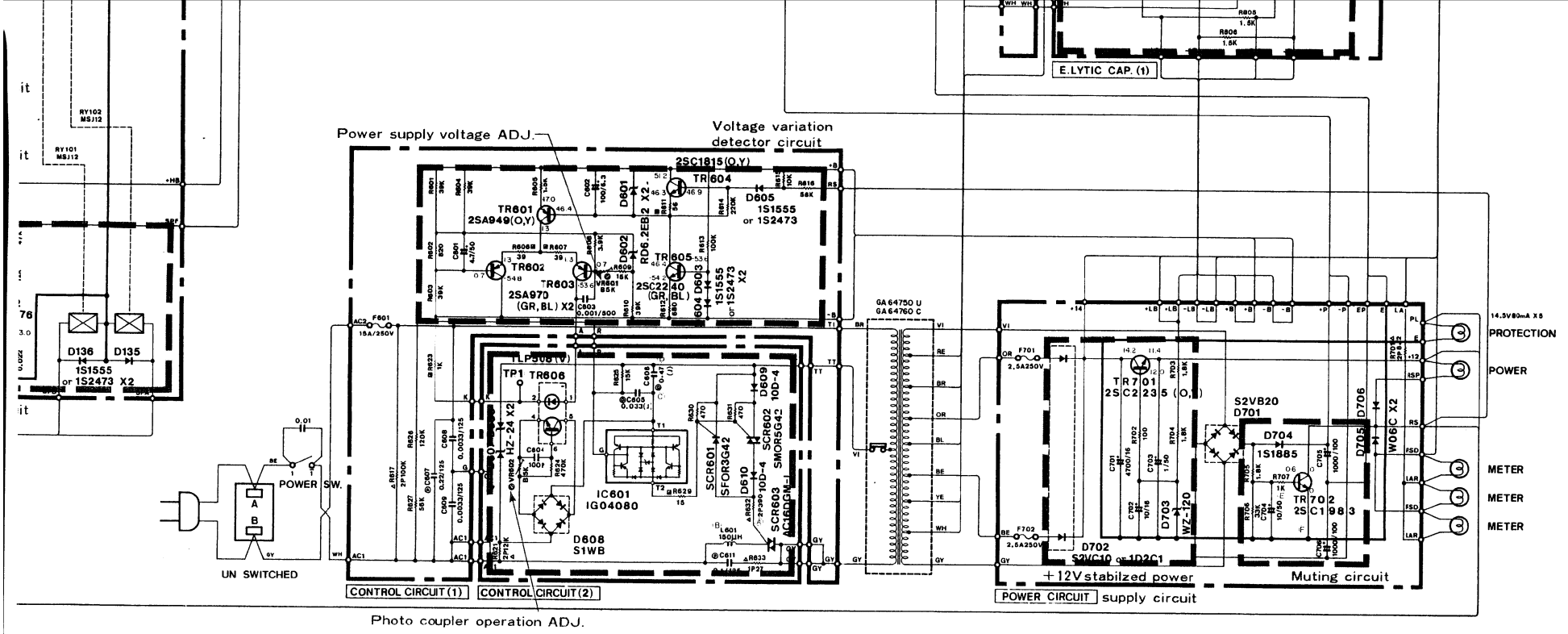

RESISTOR

REMARKS	PARTS NAME
NO MARK	CARBON FILM RESISTOR
▲	METAL FILM RESISTOR
△	METAL OXIDE FILM RESISTOR
■	METAL PLATE RESISTOR
□	CEMENT MOLDED RESISTOR
◪	FLAME PROOF CARBON FILM RESISTOR
⊘	SEMI VARIABLE RESISTOR

CAPACITOR

REMARKS	PARTS NAME	
NO MARK	CERAMIC CAPACITOR	
◉	POLYESTEL FILM CAPACITOR	ǂ
⊛	POLYPROPYLENE FILM CAPACITOR	ǂ
NO MARK	ELECTROLYTIC CAPACITOR	#
		#

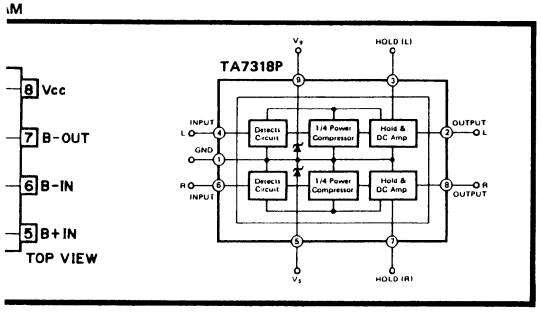

This schematic diagram is for U.S. and Canadian models. As the following parts and values differ from each model, so refer to the corresponding column.

No.	R	U, C	A, G, B
F701, 702	T2.5A 250V	2.5A 250V	T2.0A 250V

* All voltages measured with a 10MΩ/V DC electric volt meter, under no-signal condition.

* Schematic Diagram is subject to change without notice.

Note 1) When measuring control circuit board wave forms, voltages are applied very readily to the oscilloscope body etc. For this reason do not touch oscilloscope and other related objects during these measurements. It is also necessary to check that the oscilloscope body is not connected to ground in any way.

Note 2) Always check voltages by measuring the voltage between reffer-ence measuring point and check points.

Note 3) Do not touch E(emitter) of TR702 in the power circuit board error amplifier circuit with the multimeter electrode since this will increase the noise and heat generated by the transformer.