YAMAHA
SYNTHESIZER
CS-30L

●OWNERS MANUAL

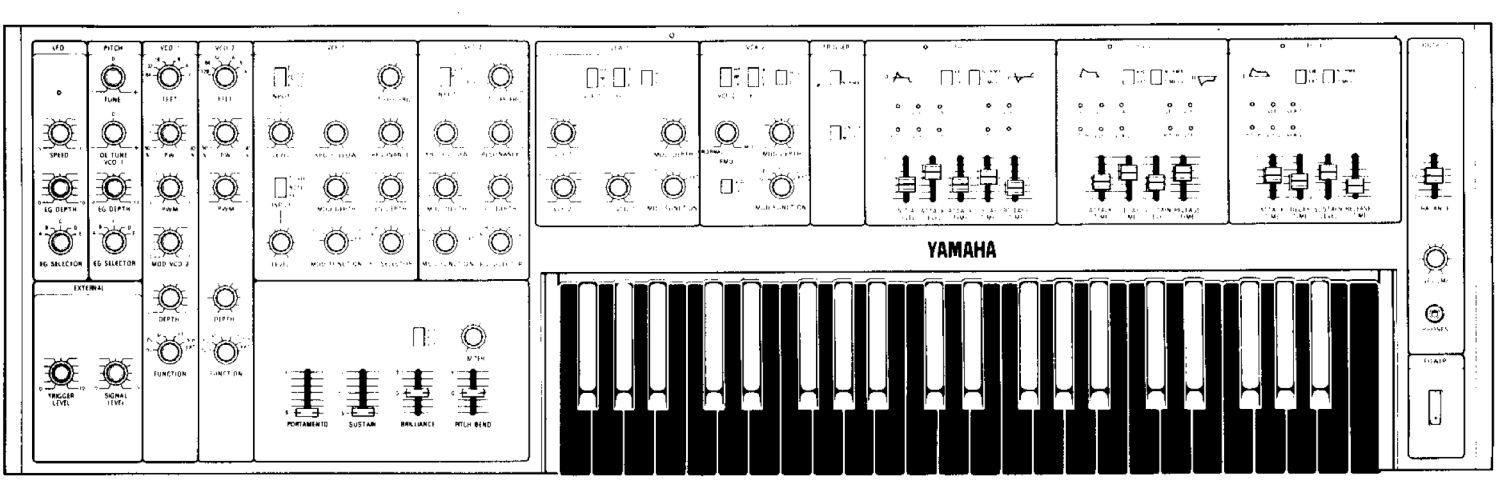

SYNTHESIZER CS-30L

We thank you very much for your purchase of our YAMAHA synthesizer CS-30L. The CS-30L is a full-fledged synthesizer developed based on YAMAHA's superior technology and rich experience cultivated over the years with YAMAHA Electone Organs and by giving full play to the latest in IC technology.

The synthesizer, unlike other musical instruments, has no fixed sound of its own. However, it has the capacity of producing, with practically unlimited freedom, new sounds that no other instruments can produce. The new sounds that you have created yourself with the CS-30L, will no doubt direct you along a path that will lead you into a new world of music.

The CS-30L is a synthesizer equipped with 2 systems of VCO, VCF and VCA as well as 3 EGs. Further, it is provided on its rear panel with terminals that will enable its use also as a guitar synthesizer as well as connection to 2, or more, other synthesizers. To make full use of such functions and to discover original sounds that are uniquely yours, we urge you to read the contents of this Owner's Manual carefully.

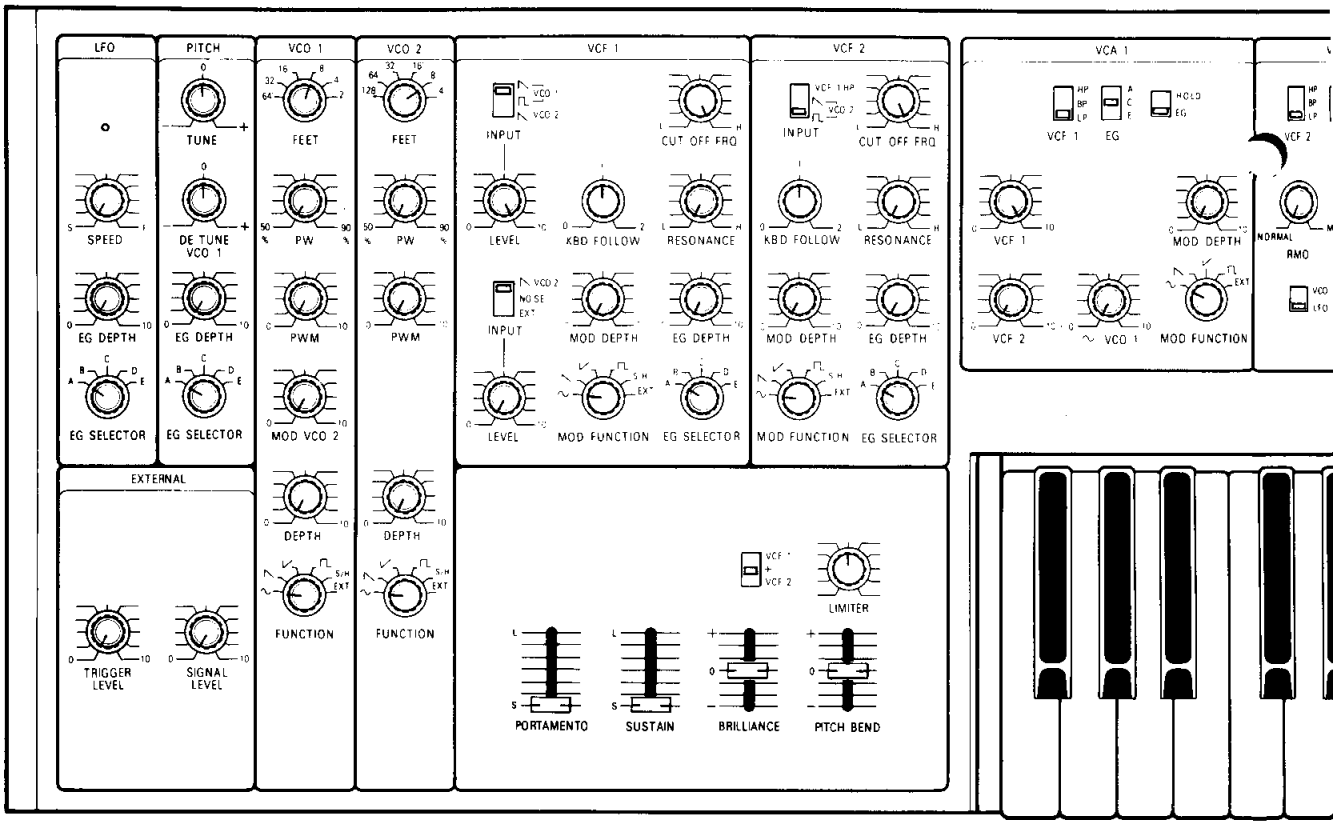

- **Full attention should be paid to the following points prior to operation.**
- **Place of installation**

  When installing the synthesizer, such places as those subjected to direct sunshine, or dusty or highly humid places should be avoided. Furthermore, in no case should it be installed close to fire, or heat-generating objects such as a power amplifier, as it may not only cause disorders and cabinet deformation but may also lead to a fire disaster.
- **Cleaning**

  When cleaning the set, do not wipe the panel, or keyboard with a thinner-type liquid, or spray of the same-type liquid; as it will cause discoloration, or stains. Always wipe it with a soft and dry piece of cloth.
- **Connection**

  Connections such as to amplifiers should be carried out properly with full care. Erroneous connections will lead to disorders of the synthesizer and amplifier.
- **VOLUME**

  The application of an excessive input to the amplifier may cause damage of the amplifier or speakers. For this reason, careful consideration must be given when setting the volume.

CONTENTS

	PAGE
CHARACTERISTIC POINTS OF SYNTHESIZERS	4
CONNECTION	6
BASIC SETTING	7
FUNCTIONS OF EACH SECTION	
KEYBOARD/PITCH	8
VCO1/VCO2	9
VCF1/VCF2	10
VCA1/VCA2	11
TRIGGER/EG	12
EG/EFFECT	13
LFO/EFFECT	14
EXTERNAL	15
OPERATION SEQUENCE	16
TROUBLE SHOOTING	19
SOUND MEMO	20
BLOCK DIAGRAM	21
SPECIFICATIONS	22

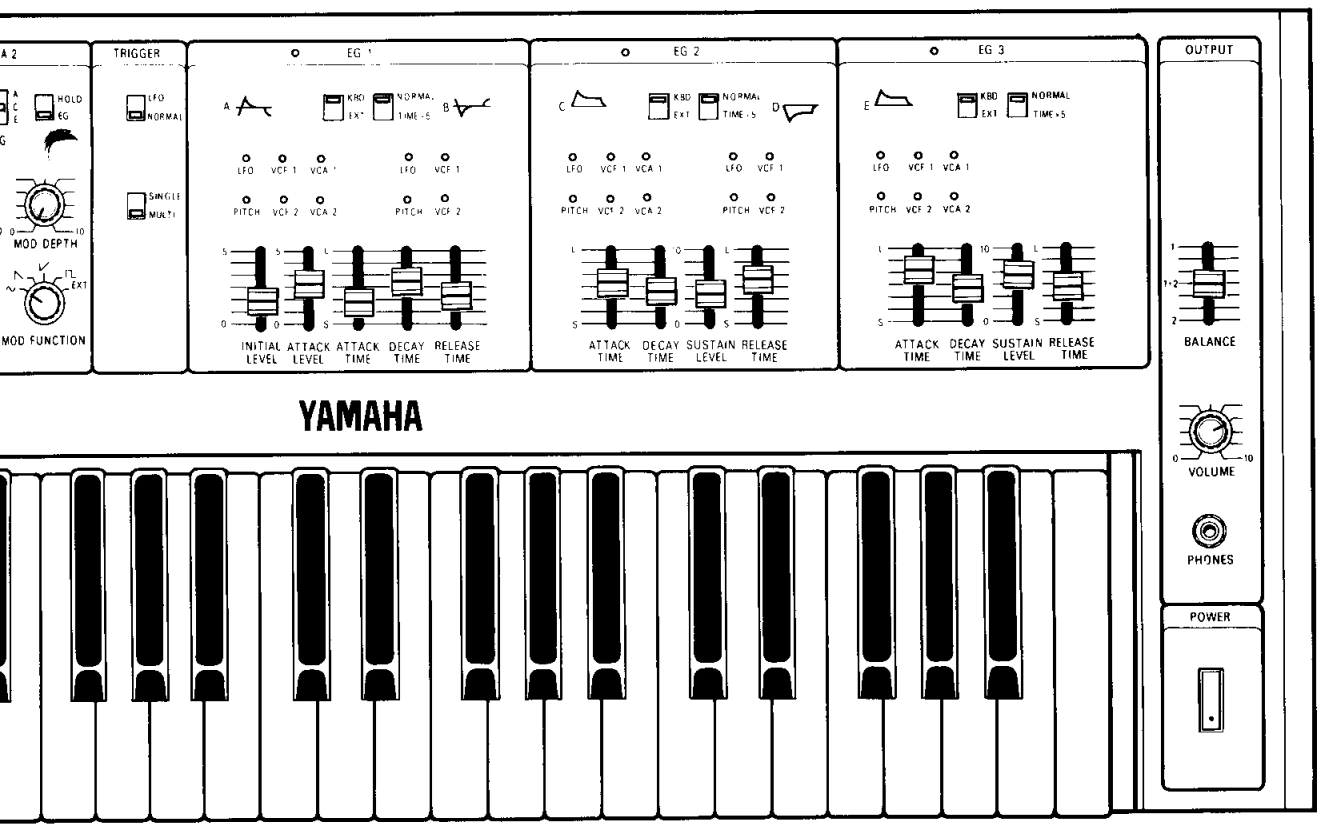

CHARACTERISTIC POINTS OF SYNTHESIZERS

The function of the synthesizer is to electrically synthesize and control the three elements of sound, that is, interval, tone and volume as well as the timewise change from the instant a sound is generated to the point it fades away.

The interval is controlled by the VCO, tone by the VCF, volume by the VCA and the timewise variation of sound by the EG. "VC" in VCO, VCF and VCA stands for "voltage-controlled". Now, let us consider what kind of function this voltage control has in the synthesizer. The drawing at the right is the block diagram showing the basic composition of a synthesizer.

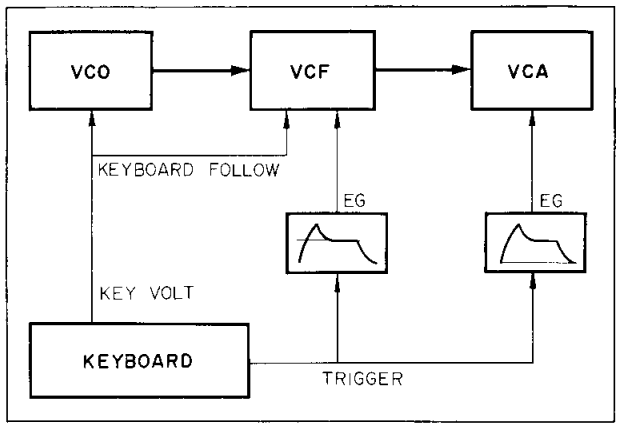

- **KEYBOARD CIRCUIT**

This circuit generates the key's voltage (KEY VOLT) that corresponds to the interval, and the signal voltage (TRIGGER) that indicates that the key is being depressed. Although the TRIGGER will become "o" volt when the finger is released from the key, the KEY VOLT that indicates the interval will be memorized by the SAMPLE AND HOLD (S/H) circuit until the next key is depressed.

The drawing at the right shows the relationship between the key's interval and KEY VOLT voltage together with the wave forms of the TRIGGER and KEY VOLT signals mi (E) → do (C) → sol (G) are depressed.

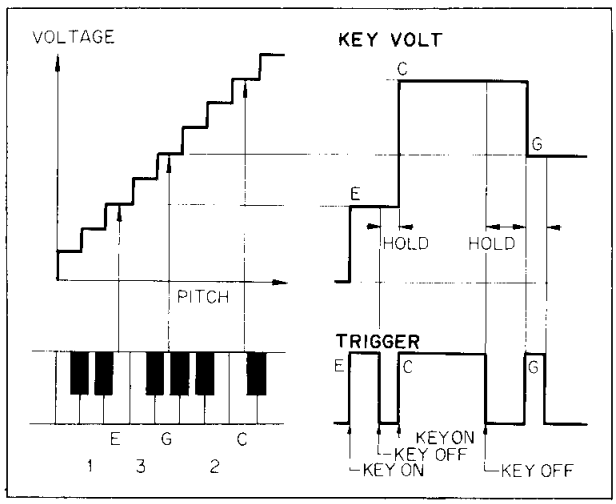

- **VCO (Voltage control oscillator)**

The VCO makes a sound source of a frequency that corresponds to the KEY VOLT of the keyboard circuit. It oscillates simultaneously such sound source wave forms as saw-tooth waves and square waves that have a great number of harmonics and sine waves of a single frequency. Although the oscillator frequency corresponds linearly to the KEY VOLT value, if the oscillator should be controlled while adding an AC voltage such as low frequency oscillator (LFO) to the KEY VOLT voltage, it will be possible to modulate the key interval with the LFO, or the like. The function of adding this voltage is carried out by an adder. Regarding this voltage value that is used to control the VCO, it is possible to freely control the VCO's oscillating frequency in accordance with the voltage value since a synthetic voltage formed by several AC wave forms is used instead of a fixed DC voltage.

The drawing at the right shows a case of VCO control in which the sine waves of the LFO is added to the KEY VOLT. Needless to say, it is also possible to add an EG voltage in place of, or simultaneously with, the LFO.

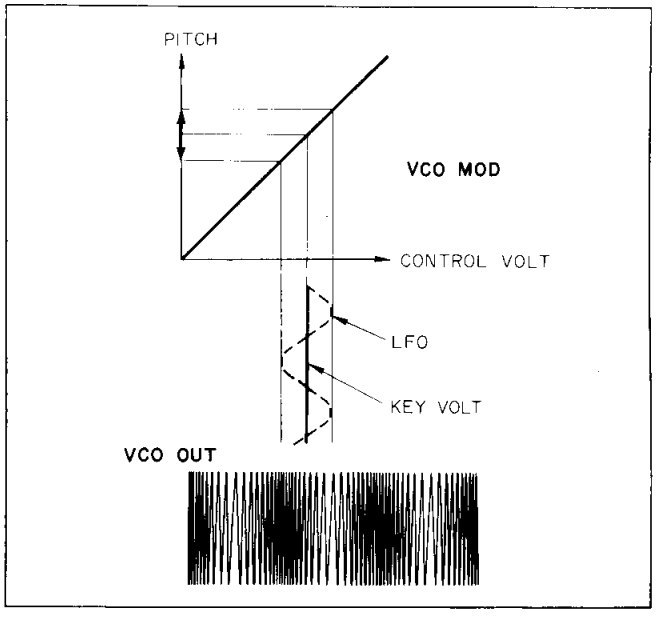

- **VCF (Voltage controlled filter)**

The VCF, which is the heart of the synthesizer,

creates the tone by changing the harmonic structure by cutting, or emphasizing, with the filter a part of the harmonics of VCO-produced sound source having a large number of harmonics.

The VCF creates the tone by changing the cut-off frequency (existing on the borderline between the passage and shield-off sections) by controlling the voltage. To eliminate any harmonics structure deviation (KEY BOARD FOLLOW) caused by the difference in intervals, it is designed so that the cut-off frequency will shift along with the shift in the interval, by adding the KEY VOLT voltage of the keyboard circuit to the DC voltage generated with the use of the control. The tone can be rendered with a timewise variation by adding to these control voltages a voltage such as that of the LFO, or EG, that changes with time as in the case of the VCO.

The drawing at the right illustrates the mode in which the cut-off frequency of the LPF is controlled by the EG.

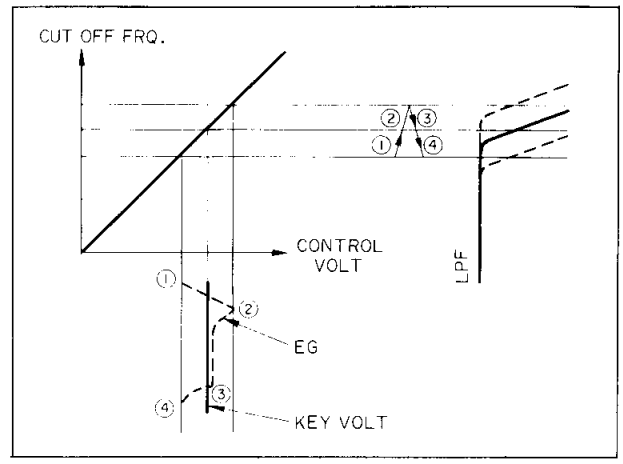

- **VCA (Voltage controlled amplifier)**

The VCA is an amplifier block whose amplification degree is varied by the control voltage.

The drawing at the right shows a case in which the amplification degree of the amplifier is controlled by the EG voltage to give a timewise variation (envelope) to the volume, from the point the sound starts up to the point it fades away. Naturally, as in the cases of the VCO and VCF, it is possible to add a voltage such as of the LFO to the EG voltage and use the resulting voltage as VCA's control voltage.

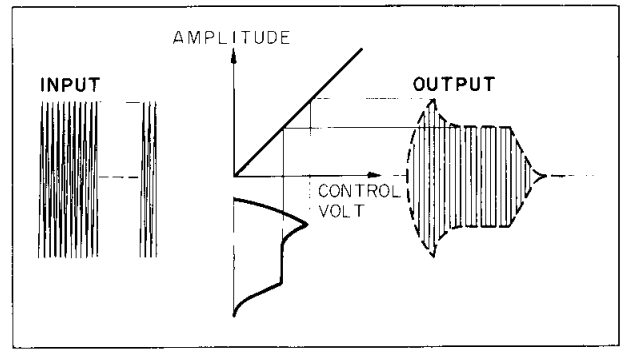

- **EG (Envelope Generator)**

The EG has the function of producing the voltage curve that indicates the condition in which the sound changes in order to render the sound with a timewise variation. Given a signal to initiate the start and end of the envelope by the TRIGGER voltage of the keyboard circuit, the EG generates signals that will be used as the control signals for the VCO, VCF, VCA, etc.

In addition to the elements described above, the synthesizer has such elements as the LFO (low frequency oscillator) that functions to give a periodical variation, and controls to enhance the effects of the performance. But in any case, the fact remains the same that something is controlled by changing the voltage.

In this way, since all controls in a synthesizer are effected by using the voltage value as a medium, the synthesizer is capable of producing various variations of sounds with ease.

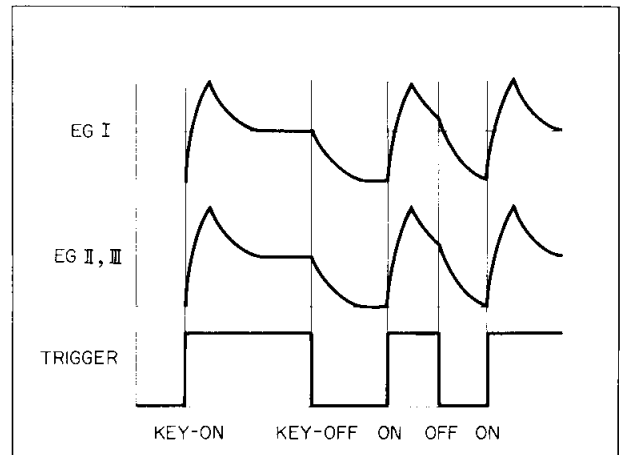

Difference in envelope waveforms caused by trigger waveforms.

CONNECTION

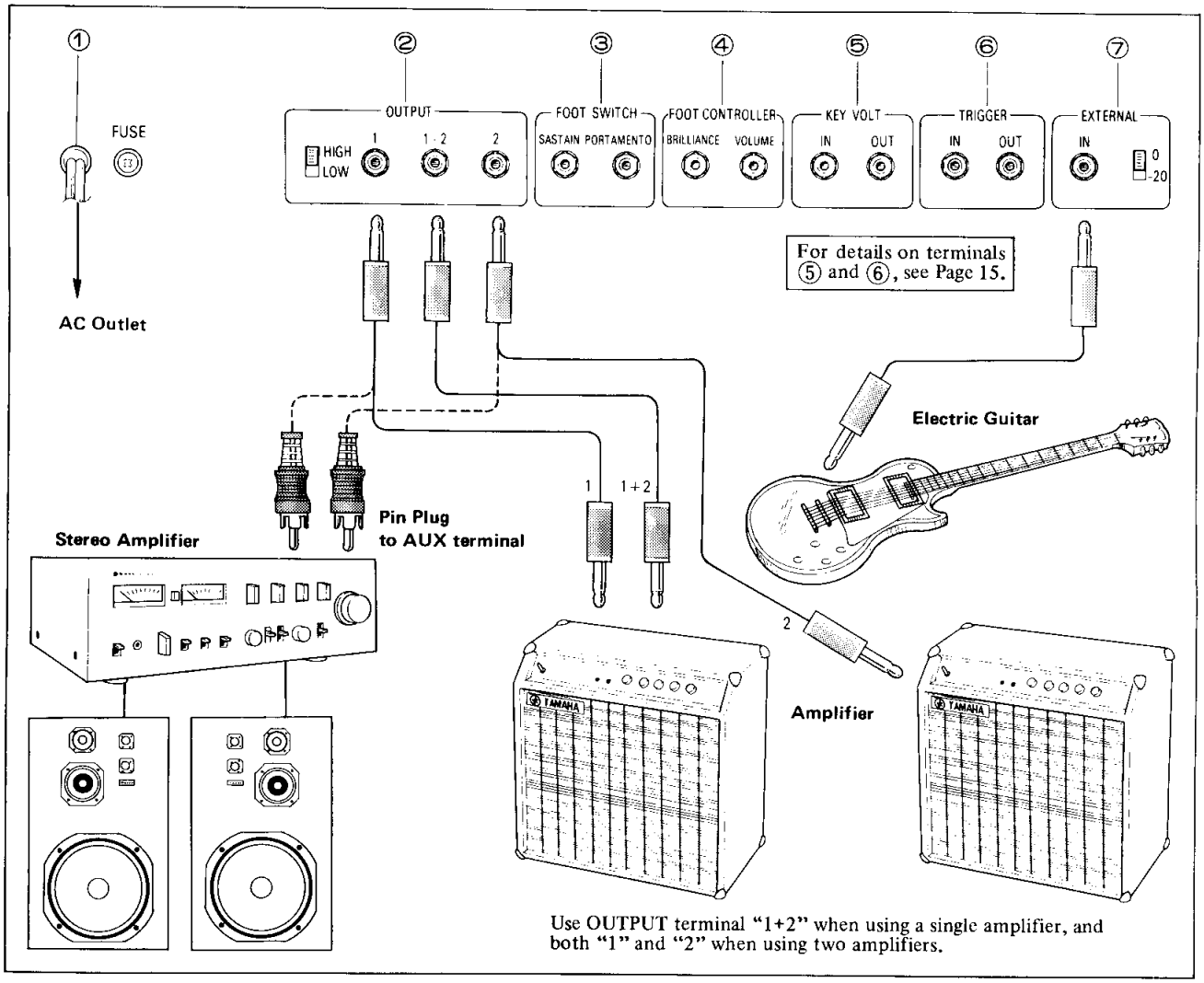

① POWER CORD

Connect the power cord plug into an AC outlet.

② OUTPUT

These are output terminals. They are terminals for three different outputs: "1" and "2" will feed out outputs respectively of VCA-1 and VCA-2, while "1 + 2" will feed out an output wherein VCA-1 and VCA-2 are mixed.

- Switchover can be effected among the voltage levels to be fed out.
- The amplifier to be connected to the synthesizer should have as flat as possible frequency response.

③ FOOT SWITCH SUSTAIN/PORTAMENTO

By connecting the FOOT switch, the effects of the SUSTAIN and PORTAMENTO levers can be cancelled.

④ FOOT CONTROLLER BRILLIANCE/VOLUME

By the use of the FOOT CONTROLLER, the BRILLIANCE and VOLUME levers can be operated.

⑤ KEY VOLT & ⑥ TRIGGER

By connecting the set with another synthesizer having KEY VOLT and TRIGGER terminals, this set can be used as a multiple-system synthesizer. See Page 15 for further details.

⑦ EXTERNAL

By connecting an electric guitar, or an electric piano to this terminal, a synthesizer effect can be given to the sound source. For further details, please refer to Page 15.

- Connections should be carried out carefully as an erroneous connection will become the cause of troubles of the synthesizer and amplifier.
- Never apply an excessive input (5V, or more) to the KEY VOLT's IN terminal as it will cause trouble to generate in the synthesizer.

BASIC SETTING

The functions of the respective controls and switches will be described in the section starting from Page 8. Here we shall merely refer to how basic setting is carried out when sounds are to be produced experimentally to check the synthesizer, or amplifier.

This is for the case in which the saw-tooth waves (⩘) of VCO-1 are fed out from OUTPUT 1 and the square waves (⊓) of VCO-2 from OUTPUT 2 in their original form. OUTPUT 1 + 2 will feed out a waveform wherein the two are mixed.

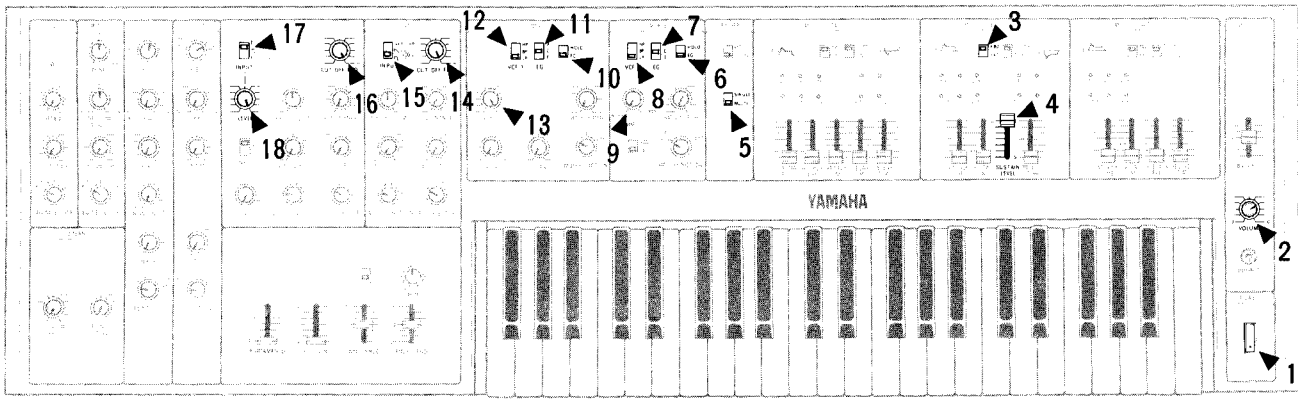

- Setting is carried out by checking the controls and switches from 1 to 18.
- Once the controls and switches are set in the state of basic setting, sounds will be produced no matter how other controls and switches may be set. However, to acquire a better understanding of the functions of each section, we suggest that you set them as shown in the diagram.
- When sounds cannot be produced for some unknown reason, the setting should be brought back to the basic setting.

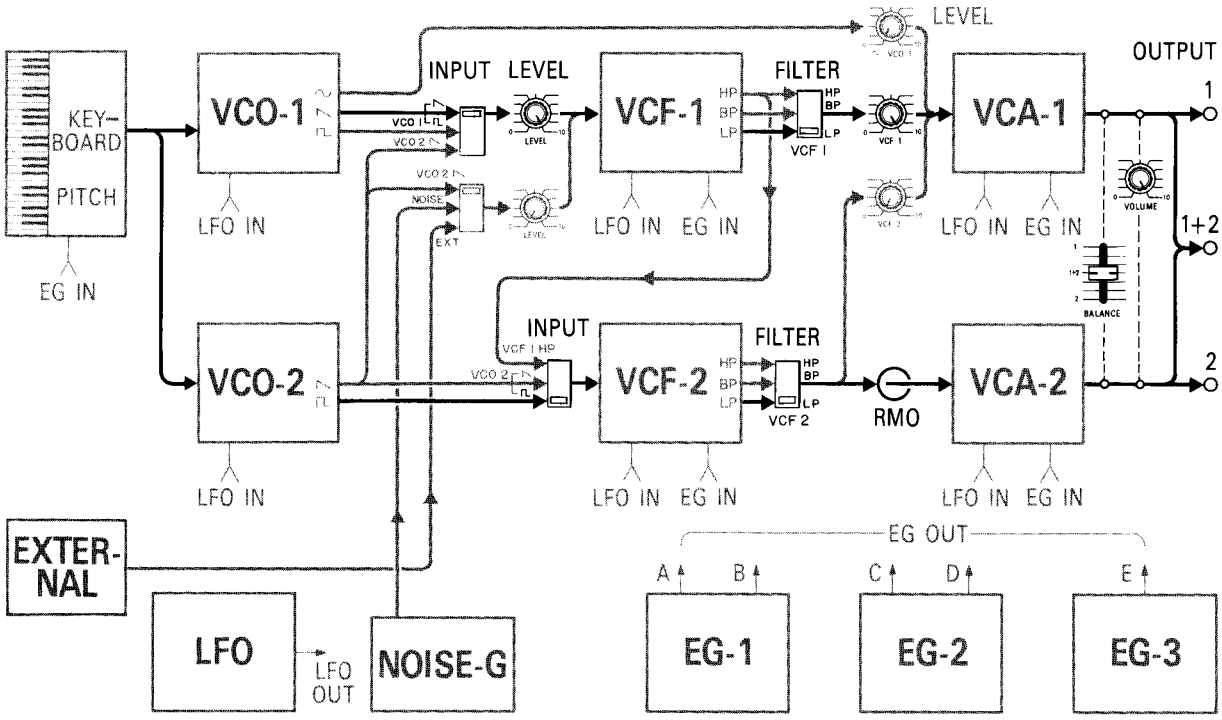

FUNCTIONS KEYBOARD/PITCH

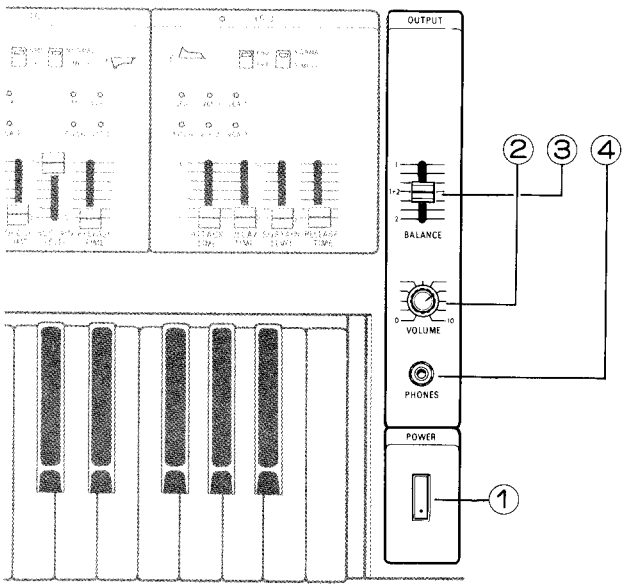

KEYBOARD

The CS-30 is a monotone synthesizer that covers 3-1/2 octaves with its 44 keys. When 2, or more, keys are depressed simultaneously, priority will be given to the key of the higher, or highest interval. (Priority to higher sound)

POWER

① POWER

This is the power switch. When switched ON, the POWER indicator will illuminate.

OUTPUT

② VOLUME

These controls are used to control the overall volume of CS-30L. The control on the amplifier side should be fixed to an optimum position.

③ BALANCE

Used to control the volume balance between VCA-1 and VCA-2 in the CS-30L which has 2 systems of the VCO, VCF and VCA.

④ PHONES

This is an output terminal for the headphones.

PITCH

① TUNE

Used for adjusting the intervals. VCO-1 and VCO-2 will change in the same manner.

- It takes roughly 30 minutes for the stabilizer's intervals to stabilize. Accordingly, when tuning is to be carried out, power should be switched on approximately 30 minutes prior to tuning.

② DE TUNE

Used for adjusting the intervals of VCO-1 alone. The interval of VCO-2 will remain unchanged.

③ EG SELECTOR

Effects switchover of envelope generator (EG).

④ EG DEPTH

Used when modulating the VCO with the envelope generator: adjusts the depth.

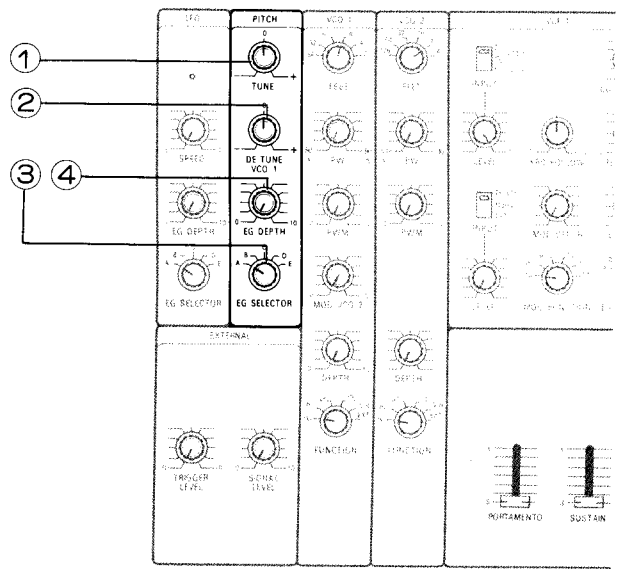

FUNCTIONS VCO 1 /VCO 2

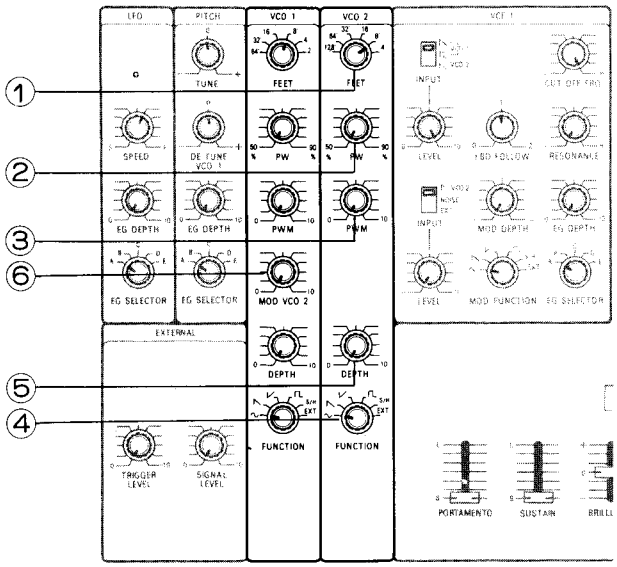

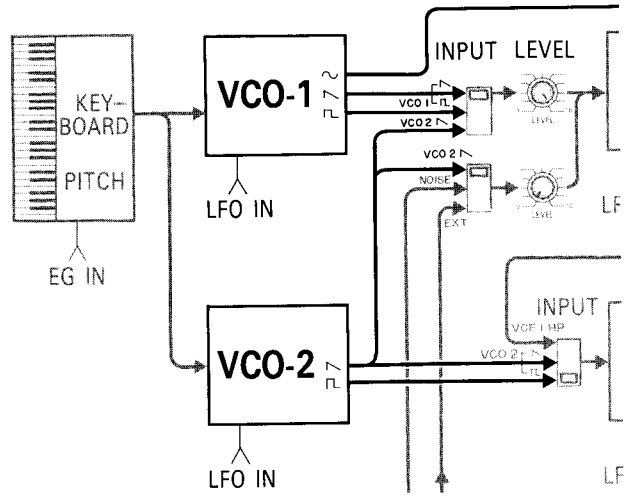

① FEET

As stated earlier, the keyboard covers 3-1/2 octaves with its 44 keys. By making use of this FEET Switch, the sound range to be covered can be shifted as shown in the diagram.

- VCO1: Covers 2′ ~ 64′
- VCO2: Covers 4′ ~ 128′

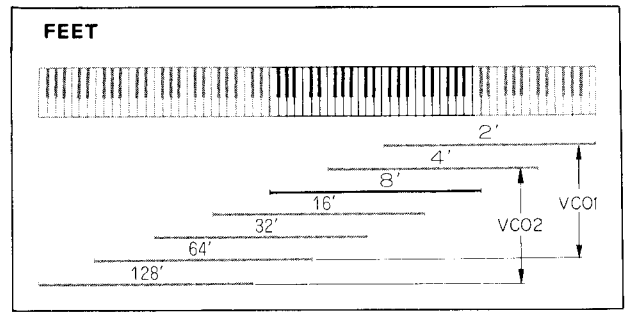

② PW

Adjusts the pulse width of the square wave output of VCO. (50% ~ 90%)

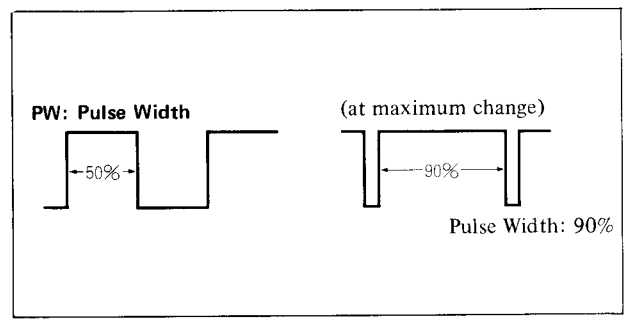

③ PWM

Changes the pulse width at intervals equivalent to LFO's period. (10% ~ 90%)

④ MODULATION FUNCTION

Used for switching over the way in which VCO modulation is to be applied.

- At S/H, sounds whose intervals vary in an irregular manner will be fed out.
- At EXT, the intervals will be varied by the external input.

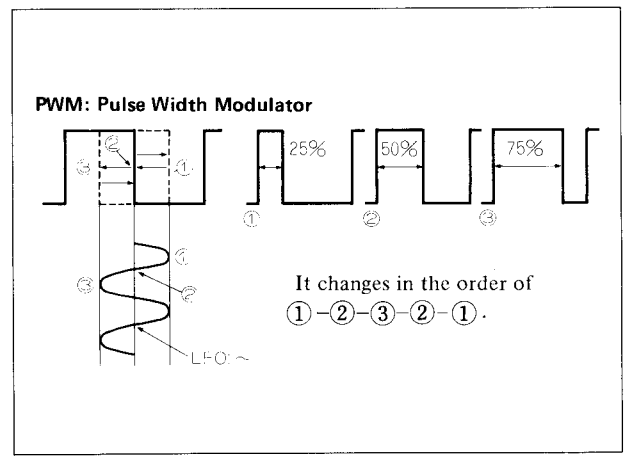

⑤ MODULATION DEPTH

Modulates the VCO using the period of LFO.

⑥ MOD VCO2

VCO1 will be modulated by the output of VCO2.

FUNCTIONS VCF1 /VCF2

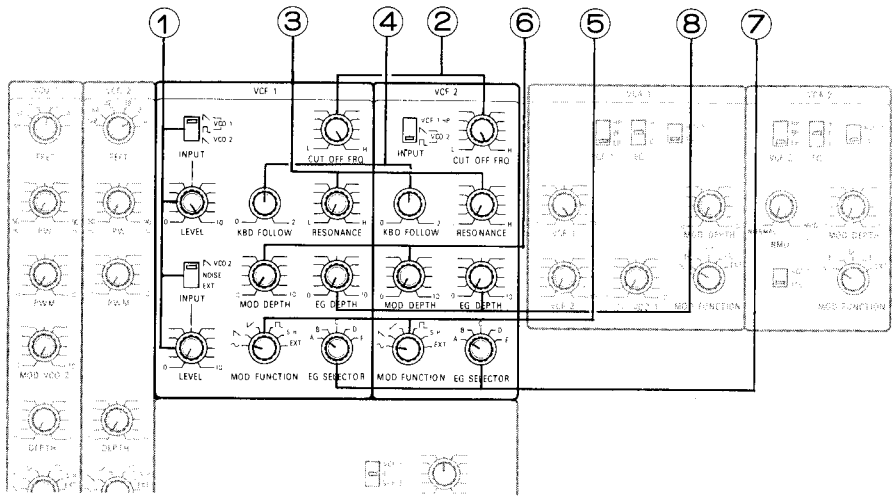

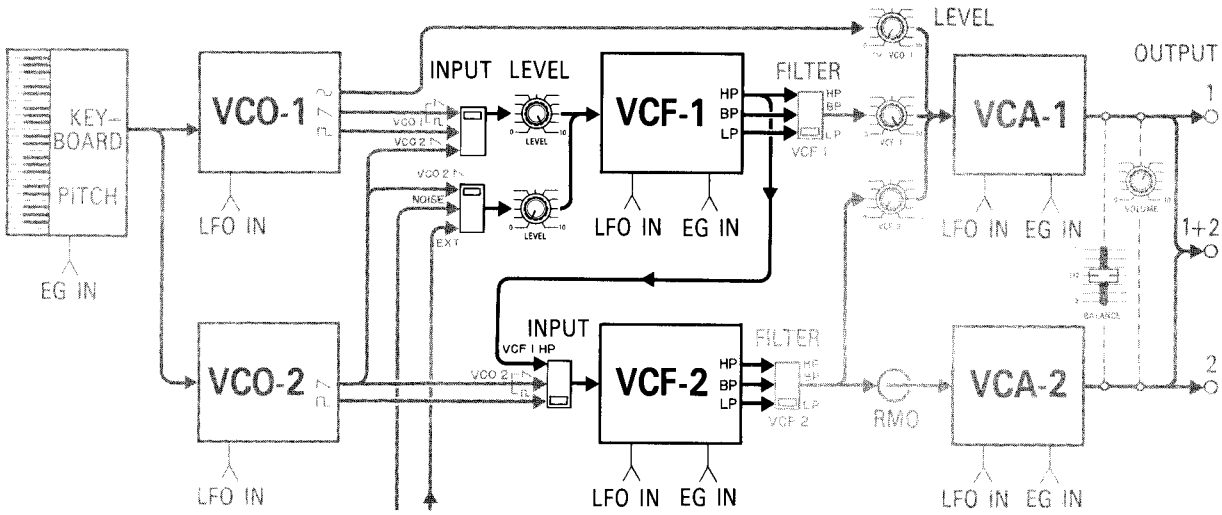

① INPUT/LEVEL

These are input changeover switches and a control for the VCF.

- No control is provided for the VCF-2 side.

② CUT OFF FRQ

Adjusts the cut off frequency of the VCF.

③ RESONANCE

Adjusts the resonance in the neighborhood of the VCF cut off frequency.

④ KBD FOLLOW

It is designed so that the cut off frequency of the VCF will shift, following the intervals of the keys. This is the control used for adjusting the following properties.

⑤ MOD FUNCTION

Selects waveform of LFO with which VCF is to be modulated.

- At S/H, sounds whose tones vary in an irregular manner will be fed out.
- At EXT, the tones will be modulated by the external input.

⑥ MOD DEPTH

Adjusts modulation degree.

⑦ EG SELECTOR

Selects envelope generator.

⑧ EG DEPTH

Adjusts the way in which EG is to be applied.

FUNCTIONS VCA 1 /VCA 2

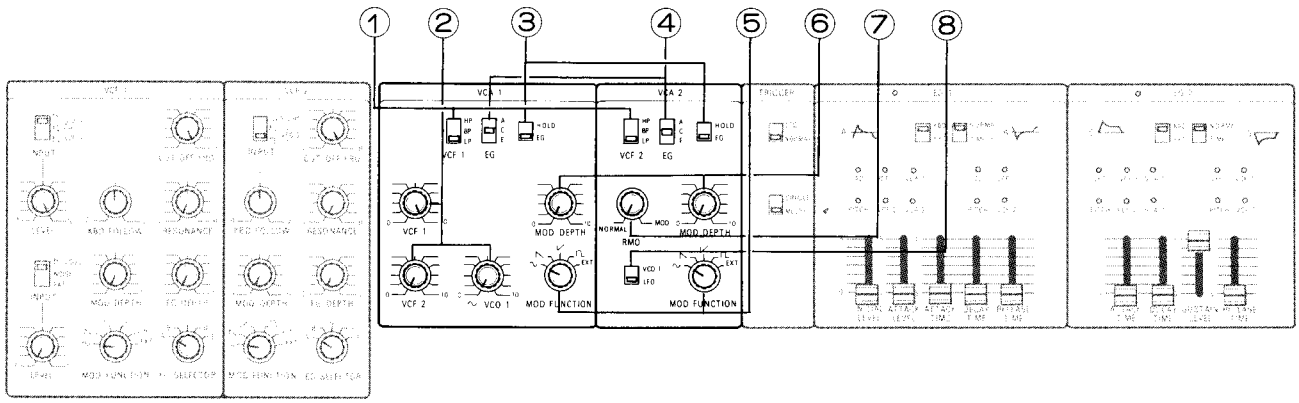

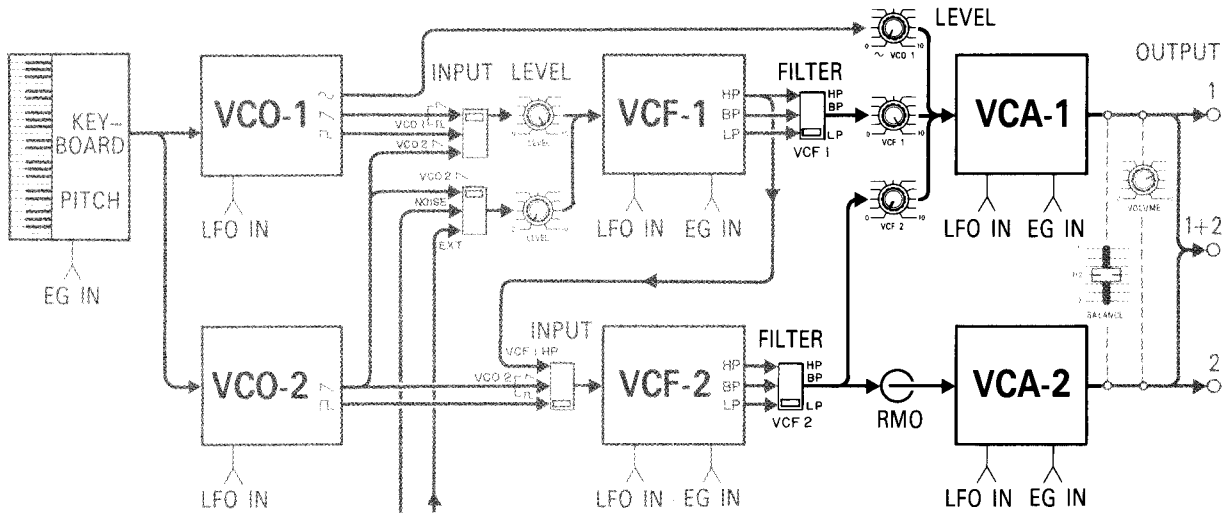

① HP/BP/LP

This is a switch used for changing over the filter characteristics of the VCF.

HP: High pass filter
BP: Band pass filter
LP: Low pass filter

② VCF1, VCF2 ∿ VCO1

Permits mixing of sine waves of VCF1, VCF2 and VCO1 at VCA1.

③ HOLD/EG

When positioned toward the HOLD side, the interval of the key that has been depressed immediately before operating this switch will be continued to be fed out regardless of the EG.

- Offers convenience for pitch matching.
- When positioned toward the EG side, the volume variation set by the EG will be gained.

④ EG A/C/E

A switch used for changing over the envelope generator employed for the VCA.

⑤ MOD FUNCTION

A switch for selecting the modulation waveform.

- When set to EXT, permits modulation to be carried out by the use of external signals.

⑥ MOD DEPTH

Used for modulating the VCA with the period of LFO.

RMO (Ring Modulator)

Enables unique effects to be gained by ring-modulating the VCF 2 output, by using the sine waves of VCO 1, or LFO.

⑦ NORMAL/RMO.

Adjusts the modulation degree of ring modulation.

⑧ VCO 1/LFO.

Selects the modulation wave of ring modulation.

FUNCTIONS TRIGER/EG

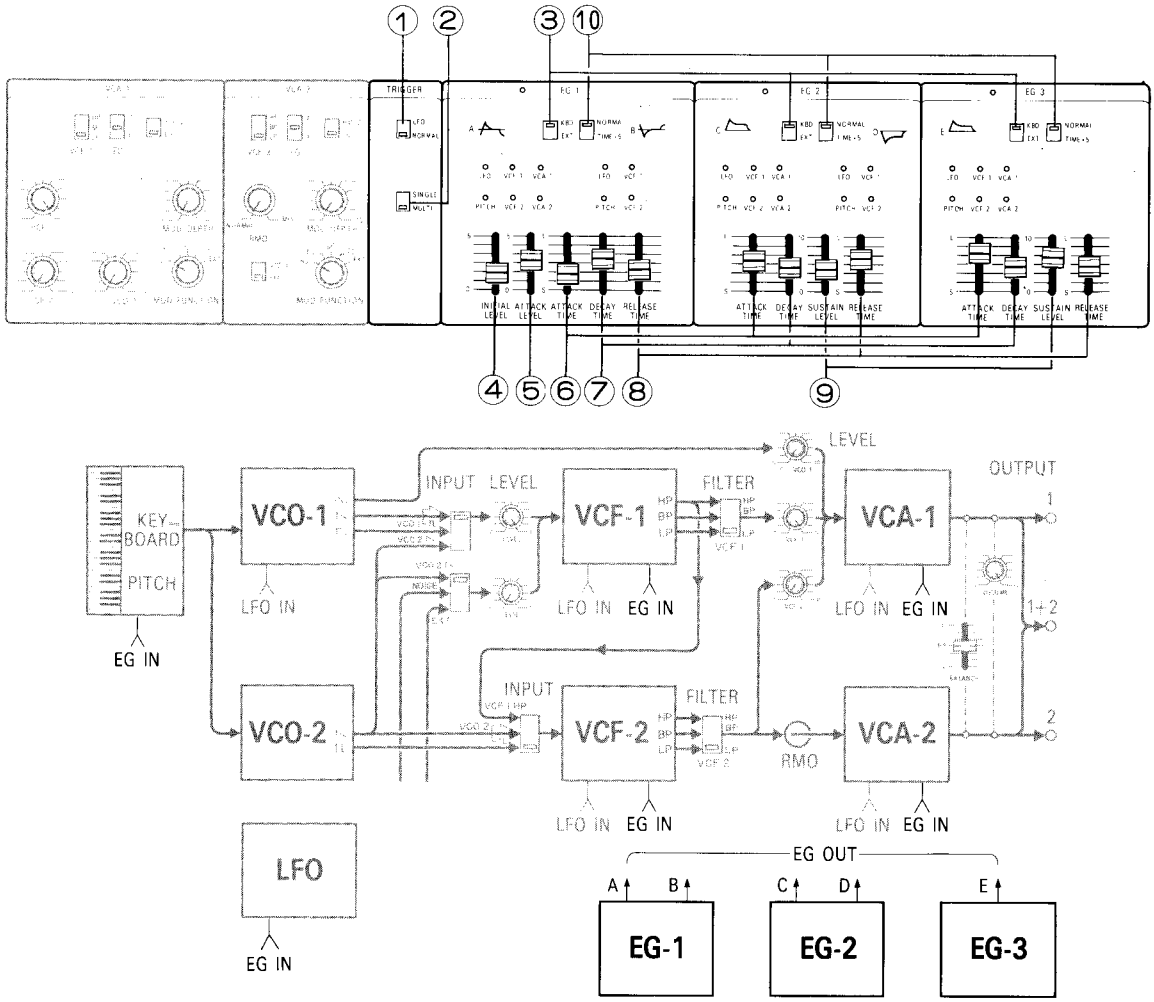

TRIGGER

① LFO/NORMAL

When set to the LFO side, a trigger will be applied synchronizing with the LFO period for the whole duration the key is kept depressed.

When set to the NORMAL side, a trigger will be applied the instant the key is depressed.

② SINGLE/MULTI

When positioned to the MULTI side, slur execution toward a higher interval is possible.

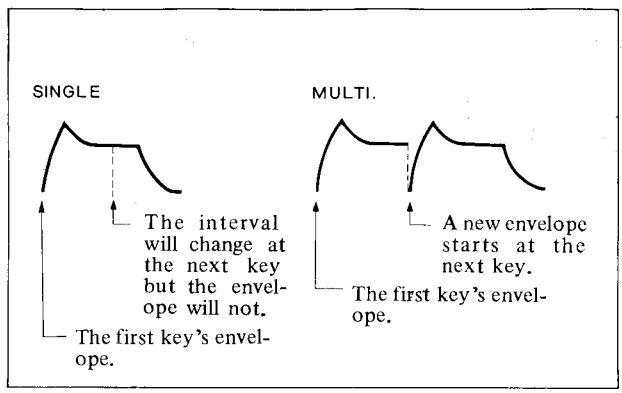

EG1, EG2 and EG3

These are envelope generators which are used for making envelopes with trigger signals developed by means of the keyboard, or by external signals, to control the PITCH, VCF, VCA and LFO blocks.

To enable changeover, an EG SELECT switch is provided for each of the blocks (i.e., PITCH, VCF, VCA and LFO).

- At each envelope generator, an indicator will illuminate whenever the EG is in use to enable confirmation of which block an EG is being used for.

Regarding the PITCH block, EG signals will cause a change in the intervals.

As regards the VCF, EG signals will cause the cut-off frequency to change.

Meanwhile, for the VCA, EG signals are used for controlling volume variation (from the point a key is depressed up to the point the sound fades away).

With regard to the LFO, EG signals will cause the period to change.

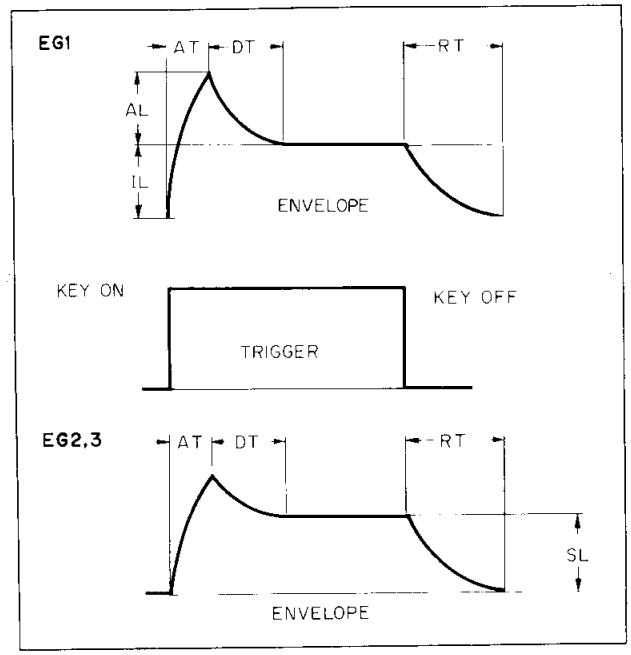

③ KBD/EXT

This is a switch used for selecting the trigger input.

Switch this over toward the KBD side for keyboard performances and toward the EXT side when the trigger is to be applied with external inputs.

④ INITIAL LEVEL (IL)
⑤ ATTACK LEVEL (AL)
⑥ ATTACK TIME (AT)
⑦ DECAY TIME (DT)
⑧ RELEASE TIME (RT)
⑨ SUSTAIN LEVEL (SL)

⑩ NORMAL/TIME x 5

When positioned to the "TIME x 5" side, the lengths of AT, DT and RT will become 5 times the NORMAL time.

- The B outputs of EG-1 are inverted-A outputs, while the D output of EG-2 is an inverted- C output.
- In the PITCH, VCF and LFO blocks, the EG's A, B, C, D and E can be used by effecting changeover to any of them that is desired.
- In the VCA block, the A, C and E outputs can be used by changeover operations.
- When the EG outputs C, D and E of EGs 2 and 3 are used for the PITCH block, the intervals will shift as set by the SUSTAIN LEVEL.

FUNCTIONS LFO/EFFECT

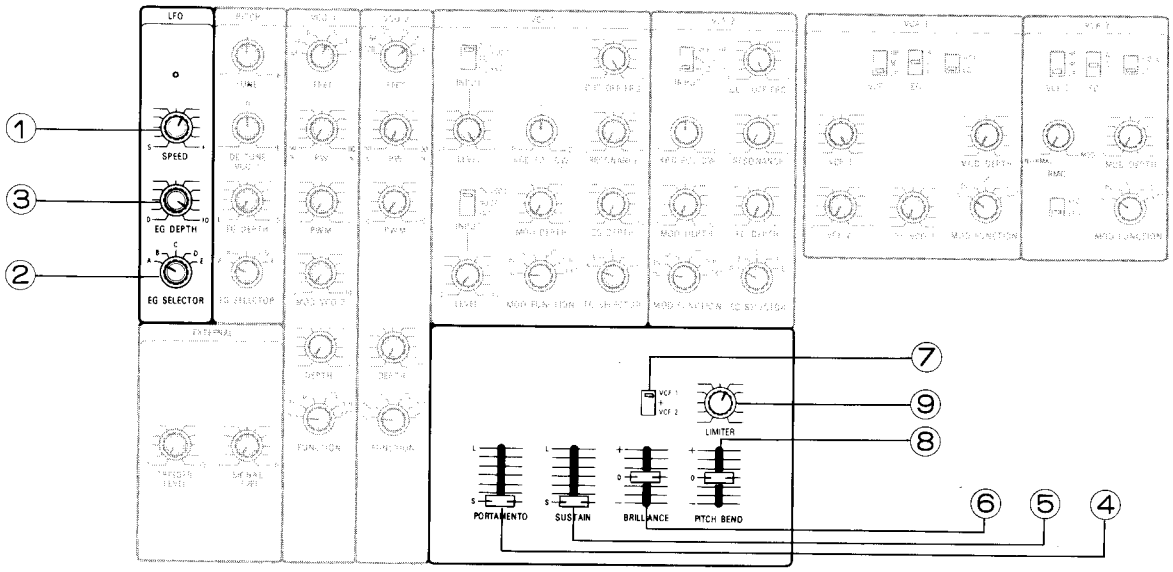

LFO

① SPEED

Used for adjusting the period of LFO. (0.1 ~ 100Hz)

② EG SELECTOR

A switch used for changing over the envelope generator.

③ EG DEPTH

Used for modulating the period of LFO with the envelope generator.

EFFECT

④ PORTAMENTO

Determines the time for which the PORTAMENTO effect is to be varied.

- By connecting the FOOT switch to the terminal on the rear panel, the PORTAMENTO effect can be switched ON and OFF.

⑤ SUSTAIN

Controls the RELEASE TIME of the envelope generators.

- If the SUSTAIN lever is positioned to a higher point than the envelope generator s RT lever, priority will be given to SUSTAIN.
- The SUSTAIN effect can be switched ON and OFF by making use of the FOOT SWITCH.

⑥ BRILLIANCE

The cut-off frequencies of the VCF can be changed continuously by manual operation by sliding the BRILLIANCE lever vertically.

⑦ VCF1 + VCF2

Switches over the VCF that is to be controlled by BRILLIANCE.

- Foot-controlled BRILLIANCE performance is possible by connecting the FOOT CONTROLLER.

⑧ PITCH BEND

By sliding the PITCH BEND lever longitudinally, the pitch can be changed continuously through manual operation.

⑨ LIMITTER

Determines the variable range for PITCH BEND.

- Enables intervals to be changed within the range of MAX ± 1 octave.

FUNCTIONS EXTERNAL

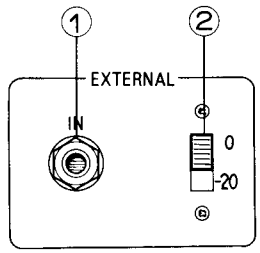

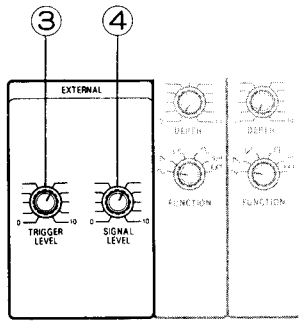

By connecting external signals to the EXTERNAL terminal provided on the rear panel, it is possible to use these external signals as sound sources. It is also possible to make the trigger signals with which the start of the envelope generator (EG) is controlled, by detecting the waveforms of these signals. Accordingly, synthesized sounds can be gained (by the unit functioning, for example, as a guitar synthesizer), when an electric guitar, or an electric piano is connected.

① EXTERNAL

This is a terminal used for feeding in external signals such as those of an electric guitar, or electronic piano.

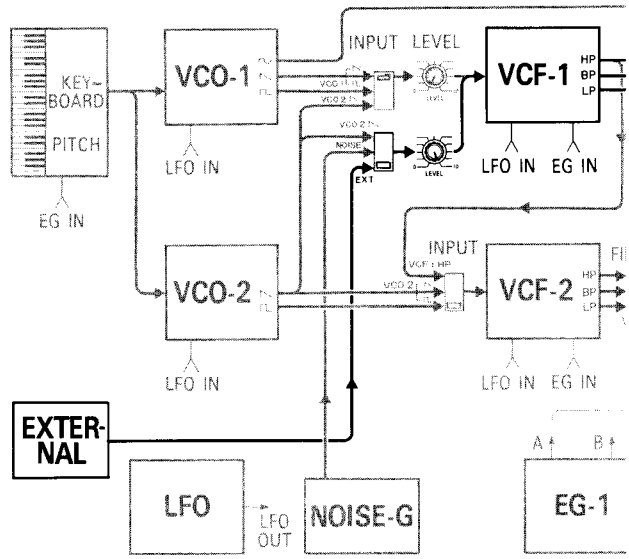

② 0/-20

Switching is to be carried out in accordance with the external signal levels.

- INPUT & LEVEL (VCF1)

When external signals are used as the sound source, the INPUT switch is to be set to the EXT side and the volume should be adjusted by means of the LEVEL control.

③ TRIGGERLEVEL

When the trigger is to be applied by external signals, the EG block's trigger switch, KBD/EXT is to be set to EXT. Then, the condition of trigger application should be adjusted by means of LEVEL.

④ SIGNAL LEVEL

Used for adjusting the input level of external signals.

WHEN USING TWO SYNTHESIZERS

By using the KEY VOLT, TRIGGER and SEQUENCER terminals to transmit the data of this CS-30L to another CS-30L (or to other synthesizers having similar terminals), this synthesizer can be used as a multiple-system synthesizer.

① KEY VOLT

This is the voltage by which the intervals of the VCO are determined.

② TRIGGER

This is the signal to indicate the KEY-ON and KEY-OFF timings of the keyboard.

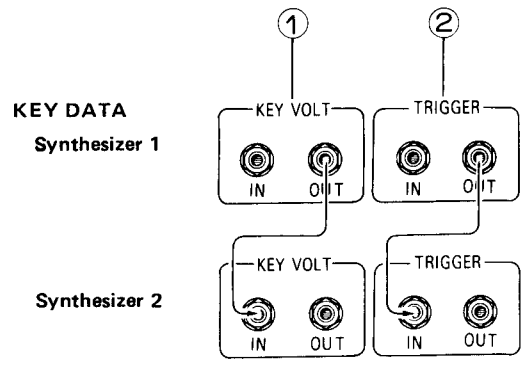

Fig. 1

- Fig. 1 shows the connections for the case of keyboard performance of Synthesizer 1, with control effected Synthesizer 2 by Synthesizer 1.

OPERATION SEQUENCE

BASIC SETTING

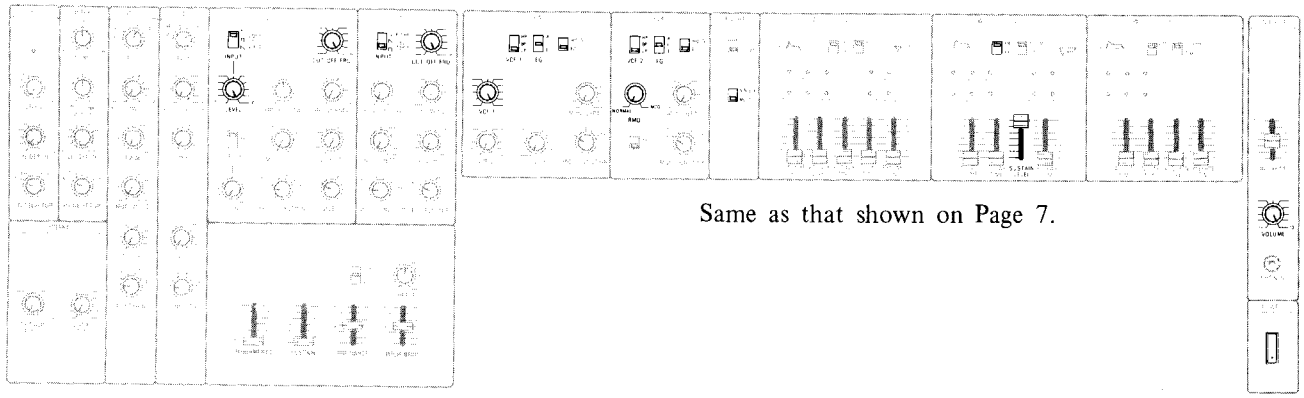

Same as that shown on Page 7.

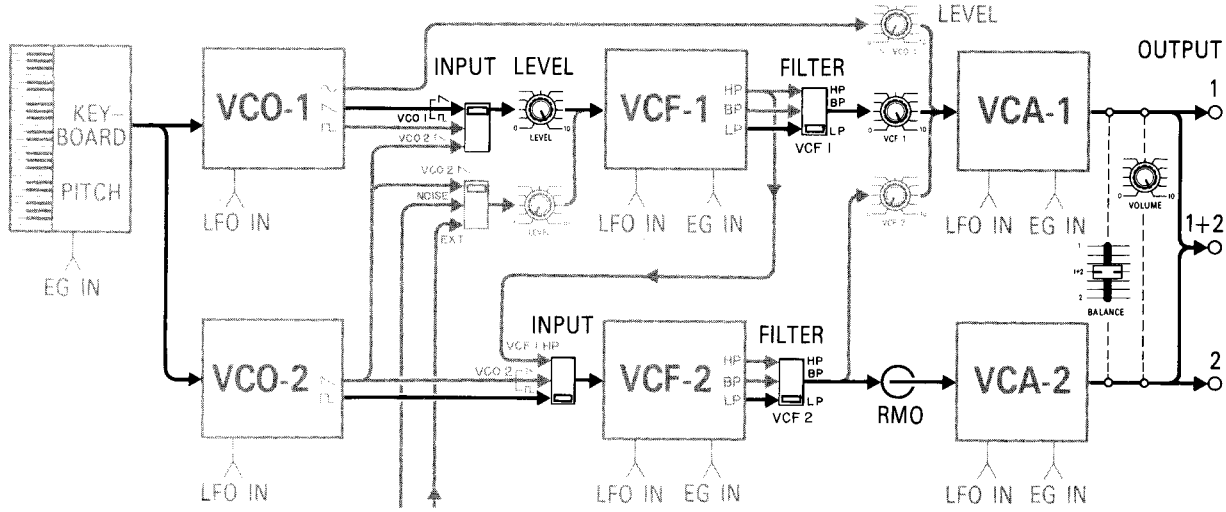

SETTING

① Referring to "CONNECTION", set the synthesizer.

② Switch on the synthesizer and amplifier and set the amplifier's VOLUME control to an optimum position.

③ When carrying out tuning, remember to switch on power about 30 minutes prior to tuning.

SOUND MAKING

① Before playing the synthesizer, you must start by making your own original sounds.

② The signals, which flow from the left side of the control panel to the right, can be controlled by the respective control knobs.

③ Set the controls of the VCF and VCA as shown in the above drawing (Basic Setting). The signal of the interval of the key that has been depressed will be produced without receiving any "spicing" from either the VCF, or VCA.

- With the synthesizer in this mode, if the BALANCE lever is positioned toward the "1" side, saw-tooth waves of VCO-1 will be fed out without any modulation, and when positioned toward the "2" side, square waves will be fed out.

④ Starting from Basic Setting, make sounds for one system each. Finally, mix the 2 systems, and complete the overall sound. In the CS-30L, the signal flows can be combined into several kinds of patterns by selecting the input selector and by carrying out mixing operations.

⑤ The operational sequence of three signal flow patterns is described below.

⑥ In actual sound making, the sequence can be freely changed, while confirming the sounds with your own ears and adjusting the control knobs, or changing the flow pattern. However, if you adjust the controls in a disorderly manner, you would eventually become too confused to understand which block you are controlling, or which control to use for which block. When carrying out adjustment, you should be always mindful of the flow of the sound source signal flow as well as of the control signal flow.

OPERATION SEQUENCE

VCO-2 → VCF-2 → VCA-2 Pattern

As the most basic and simple pattern, the case in which sounds are made by the VCO-2 → VCF-2 → VCA-2 flow is described below. Push down the BALANCE lever to the "2" side.

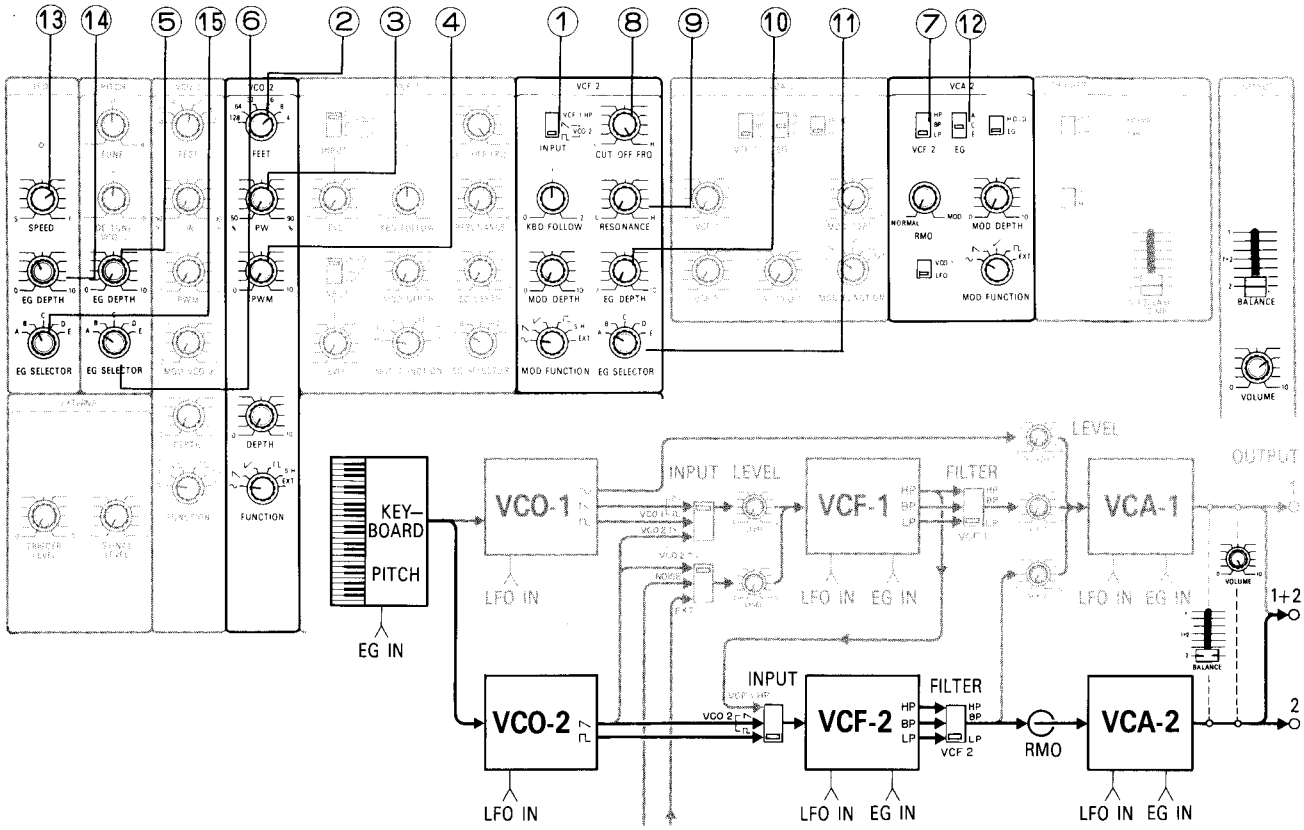

① VCO BLOCK

- Select the sound source that is to become the fundamental sound, using the INPUT switch ① of the VCF block.
- Determine the keyboard's interval range by means of the FEET switch ②.
- When a ⊓ wave is being used, it is possible to change the pulse width of the VCO by means of the PW ③.
- Further, by using the PWM ④, it can be utilized as a sound source of a further different touch.
- By using the EG DEPTH ⑤ and EG SELECTOR ⑥ of the PITCH block, the intervals can be rendered with an evelope.

② VCF BLOCK

- This is the stage at which the basic harmonic structure is made. First, select the filter using the FILTER switch ⑦ of the VCA block.
- Produce the tone of your preference by adjusting the CUT OFF FRQ ⑧ and RESONANCE ⑨.
- Apply an envelope to the tone by using the EG DEPTH ⑩, EG SELECTOR ⑪ and EG (envelope generator).

③ VCA BLOCK

- By the use of the EG changing switch ⑫, select the envelope generators for A, C and E. Apply an envelope to the volume by operating the respective levers of the envelope generators.

④ LFO BLOCK

- Adjust SPEED ① to an adequate speed.
- It is also possible to control the LFO period by adjusting the MODULATION of VCO, VCF and VCA.
- It is also possible to modulate the LFO period (SPEED) by using the EG SELECTOR ② and EG DEPTH ③.

⑤ Steps 1 through 4 are the basic sequence to be followed for making sounds. Actually, however, you can create sounds that best fits your image by adopting a freer sequence.

OPERATION SEQUENCE

PATTERN USING TWO VCOs

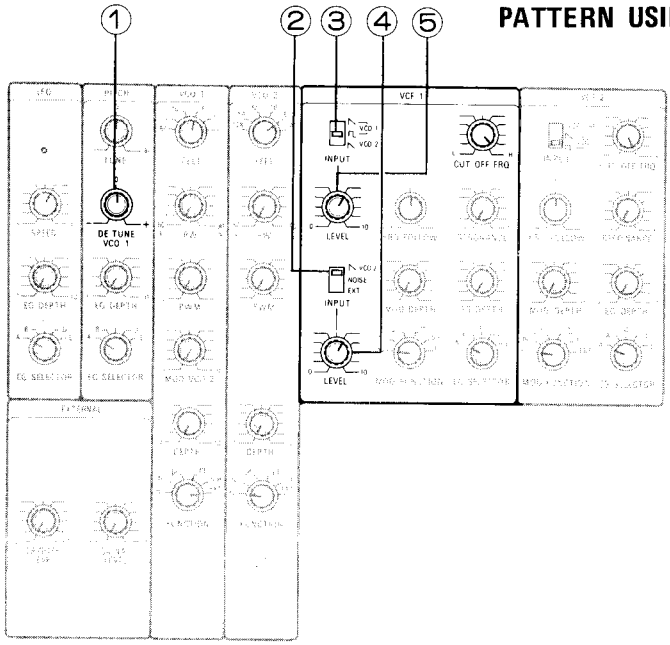

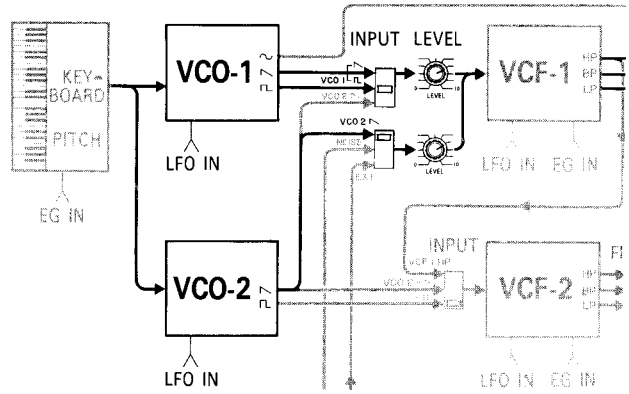

①VCO BLOCK

- The intervals of VCO-1 and VCO-2 can be applied by means of DE TUNE ① of the PITCH block.
- The saw-tooth waves of VCO-1 will be fed into VCF-1.

②VCF BLOCK

- Set the INPUT changing switch ② to VCO-2 ⟍.
- Position the INPUT changing switch ③ to ⟍, or ⊓ of VCO-1.
- Mix VCO-1 and VCO-2 by means of the INPUT LEVEL controls ④ and ⑤.

PATTERN IN WHICH TWO VCFs ARE USED IN SERIES

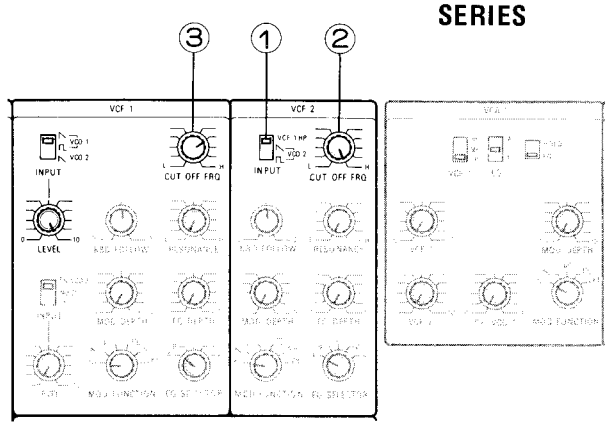

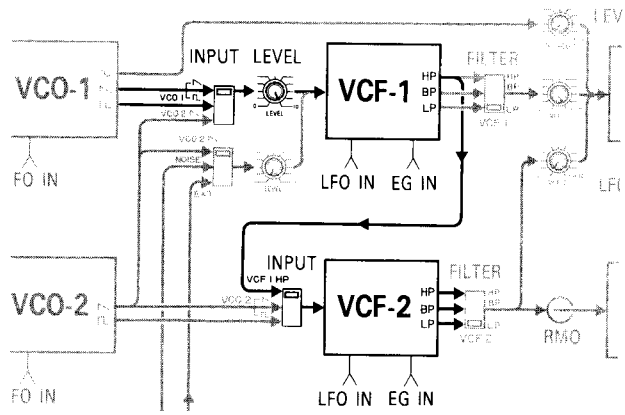

②VCF BLOCK

- Position the FILTER switch ① of VCF-2 to VCF-1 HP.
- When VCF-2 is set to either LP, or BP, and the CUT OFF FRQ ② is set to a frequency lower than that of VCF-1's CUT OFF FRQ ③, sometimes sounds will not be produced.

The controls of the respective blocks, even in the case any block of the 2 systems is arranged in series or in parallel, is to be carried out in a manner similar to that carried out for the VCO-2 → VCF-2 → VCA-2 Pattern described on Page 17. When you reach the stage where you can understand, by referring to the block diagram, what kind of positions the controls and switches of the panel occupy in the overall signal flow, then you will no doubt be able to discover a greater number of patterns.

Try to get an understanding of the function of each control by actually producing sounds and adjusting the control with your own hands, while confirming the difference in sounds with your own ears.

TROUBLE SHOOTING

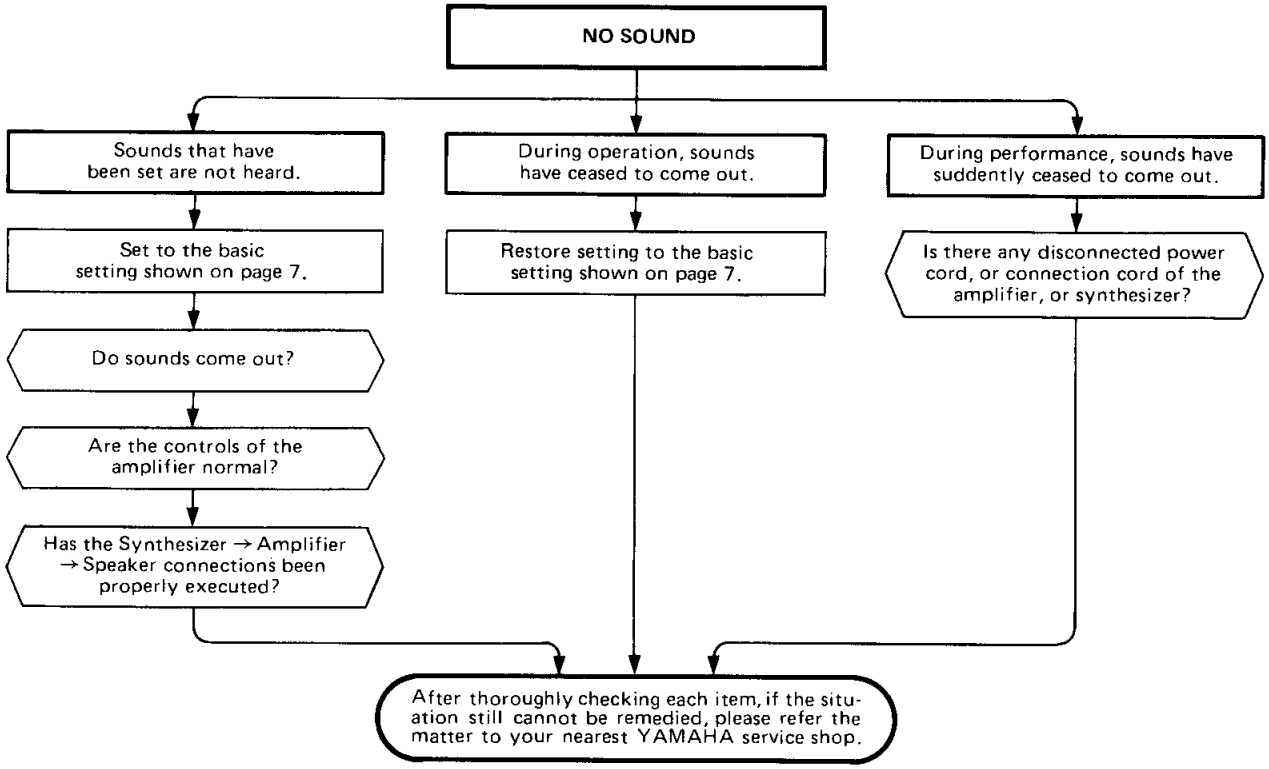

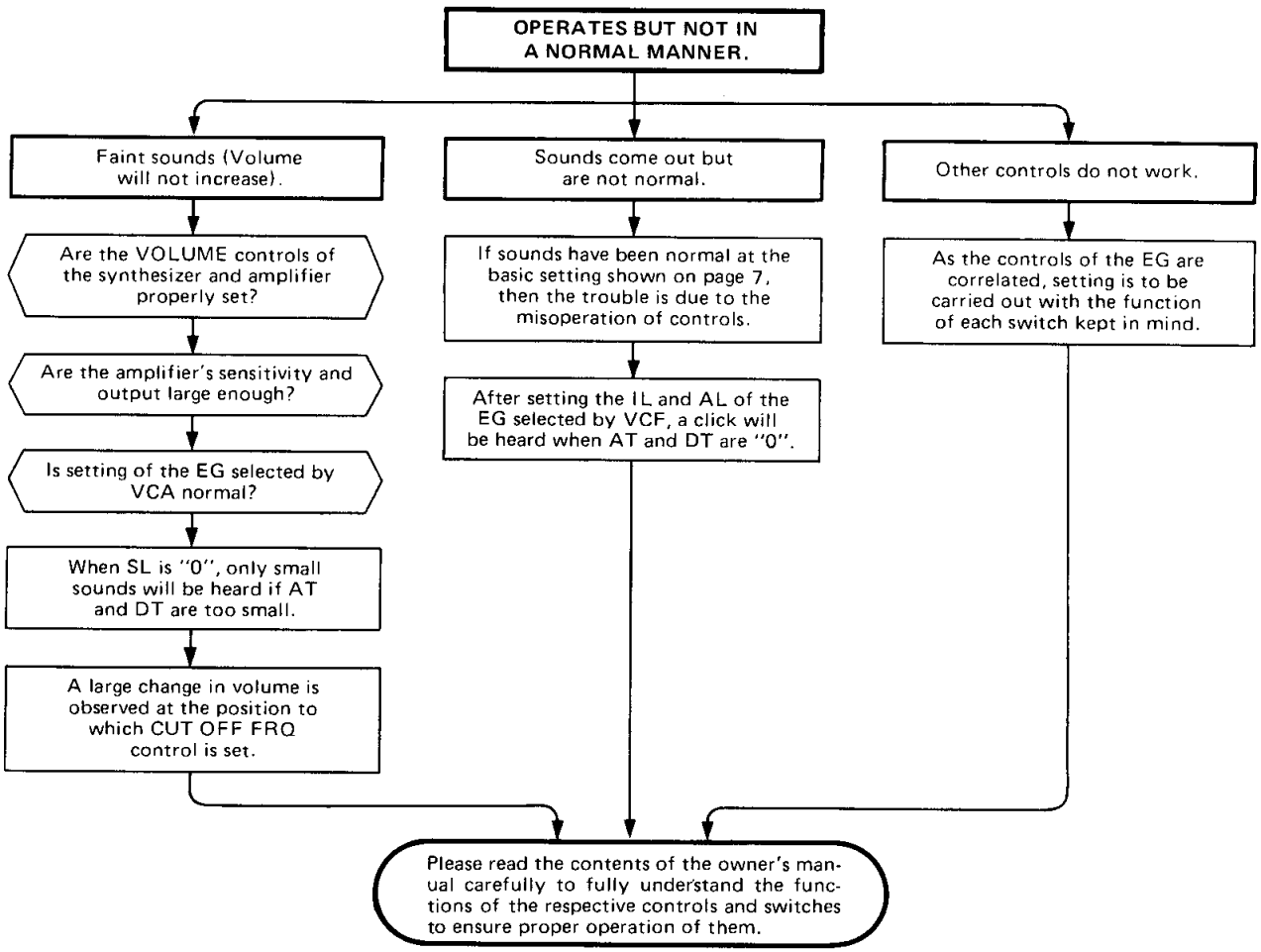

SOUND MEMO

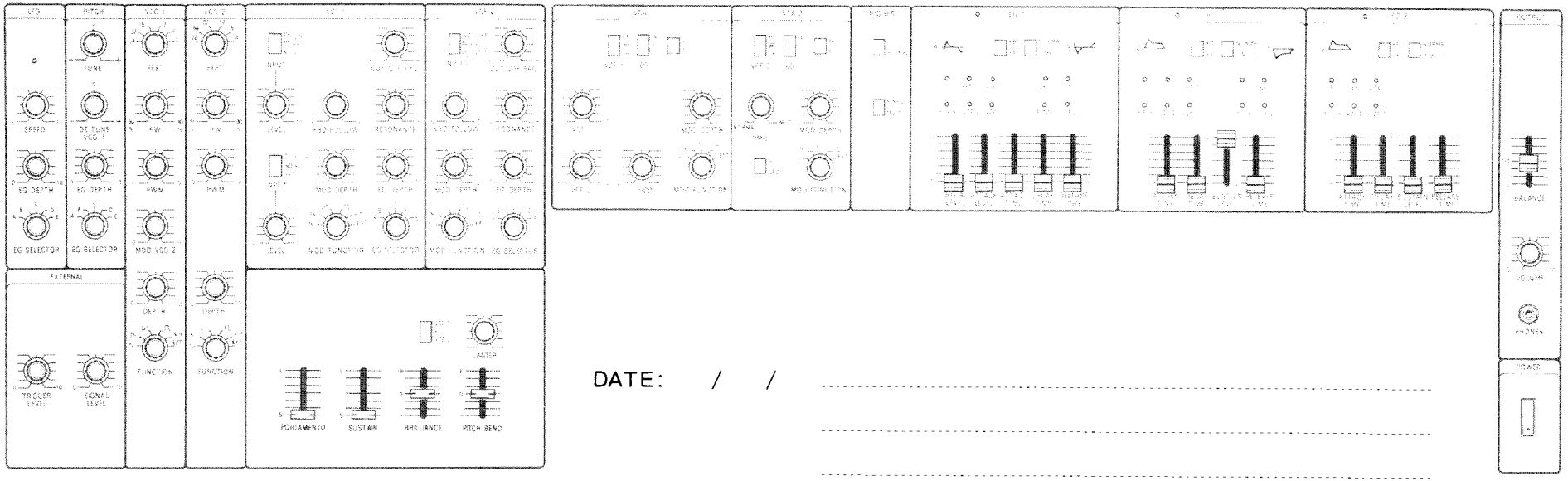

DATE: / /

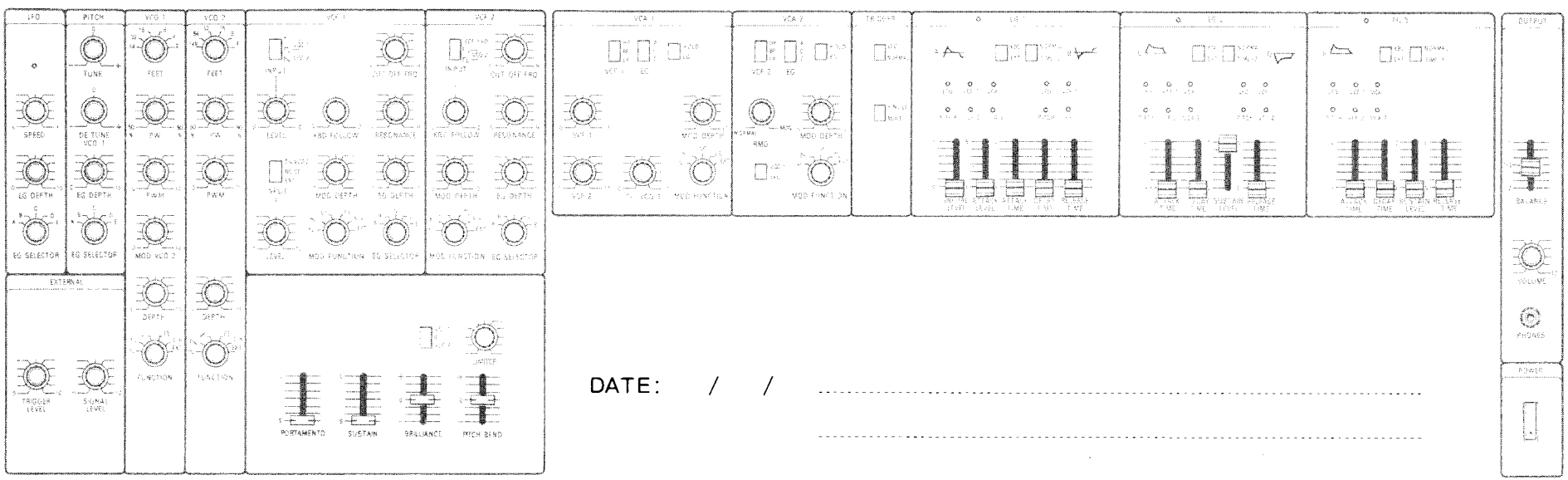

DATE: / /

Please copy the drawing and use it as a memorandum for your "original sounds."

BLOCK DIAGRAM

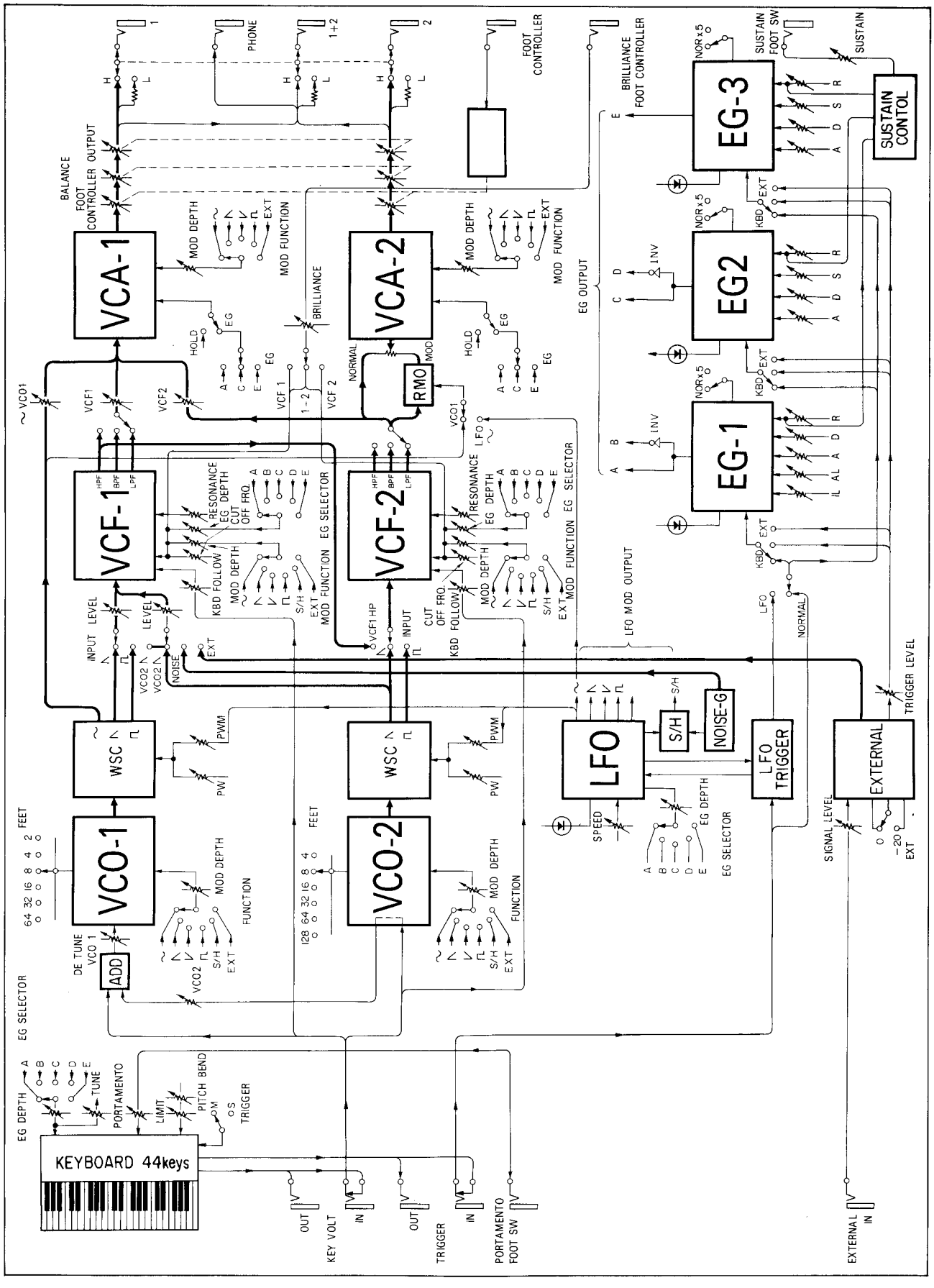

SPECIFICATIONS

SPECIFICATIONS

Keyboard . . . . . 44 keys, 3½ octaves

CONTROLS

PITCH . . . . . TUNE: +60 cents to –60 cents
DE TUNE; VCO 1: +700 cents to –550 cents
EG: SELECTOR, DEPTH

VCO . . . . . FEET;
VCO 1: 2' 4' 8' 16' 32' 64'
VCO 2: 4' 8' 16' 32' 64' 128'
PW: 50~90%
PWM: 10~90% (LFO sine)
MOD VCO 2 (VCO 1 only)
MODULATION: FUNCTION, DEPTH
+750 ~ –1,200 cents (⌉)
+160 ~ –160 cents (∿)
0 ~ +850 cents (⌐)

VCF . . . . . VCF 1: 2 input SELECTORs and LEVELs
VCF 2: Input SELECTOR
KBD FOLLOW
MODULATION: FUNCTION, DEPTH
CUT OFF FRQ
RESONANCE
EG: SELECTOR, DEPTH
CUT OFF FRQ. Variable range 10 octaves (max.)

VCA . . . . . FILTER: HP/BP/LP
VCA 1; Input selectors: VCF 1, VCF 2 and ~VCO 1
HOLD: HOLD/EG
EG selector: A, C and E

TRIGGER . . . . . LFO/NORMAL, SINGLE/MULTI

EG . . . . . TRIGGER: KBD/EXT
EG TIME: NORMAL/TIMEx5
EG 1; IL . . . 0 ~ –5
AL . . . 0 ~ +5
AT . . . 1msec.~ 1sec.
DT . . . 10msec.~10sec.
RT . . . 10msec.~10sec.
EG 2; AT . . . 1msec.~ 1sec.
DT . . . 10msec.~10sec.
SL . . . 0 ~ 10
RT . . . 10msec.~10sec.

LFO . . . . . EG: SELECTOR, DEPTH
SPEED: 0.1 ~ 100Hz

EXTERNAL . . . . . Sensitivity: 0/–20 (dBm)
TRIGGER LEVEL: Trigger-ON at 60mV$_{p-p}$ (Min.)
SIGNAL LEVEL

PORTAMENTO . . . . 3.5sec. at LONG
SUSTAIN
BRILLIANCE

PITCH BEND . . . . . ±1 octave at LIMITER max.

OUTPUT . . . . . BALANCE
VOLUME

TERMINALS

OUTPUT . . . . . 1, 1+2, 2;
HIGH: 0dBm/600Ω
LOW: –20dBm/600Ω

FOOT CONTROLLER . . . . VOLUME, BRILLIANCE

FOOT SWTCH . . . . . PORTAMENTO
SUSTAIN

KEY VOLT . . . . . IN/OUT

TRIGGER . . . . . IN/OUT

EXTERNAL . . . . . IN

PHONES . . . . . for headphones

POWER SOURCE: AC 50/60Hz

POWER CONSUMPTION: 40W

DIMENSIONS . . . . . 1,117(W)x368(D)x140(H)mm
45-5/8(W)x15(D)x5-1/2(H)in.
(with legs) 1,117(W)x368(D)x790(H)mm
45-5/8(W)x15(D)x31-1/8(H)in.
(packaged) 1,117(W)x368(D)x210(H)mm
45-5/8(W)x15(D)x8-5/16(H)in.

WEIGHT . . . . . 16kg, 35.2 lbs
(with legs) 18kg, 39.6 lbs
(packaged) 24kg, 52.8 lbs

SINCE 1887

YAMAHA

NIPPON GAKKI CO., LTD. HAMAMATSU, JAPAN

Printed in Japan 7710 ㊫