YAMAHA
ELECTRIC GRAND
PARTS LIST

CP-70
CP-70B
CP-80

006511

'82.4 1.65K Printed in Japan

Notes

Old Part No.	New Part No.	Description		CP-70	CP-70B	CP-80
30 03 00 13 00 01 80	BX 50 00 30	Top Hinge	ロングヒンジ			●
30 03 00 10 00 07 00	BX 50 00 40	Damper Rod	ダンパーロッド			●
30 03 00 67 00 01 60	CX 50 00 20	Latch Cover(1)	クランプカバー(1)	●	●	●
30 03 00 67 00 01 70	CX 50 00 30	〃 (2)	〃 (2)	●	●	●
30 05 00 30 00 27 20	CX 50 00 40	Black Key Top	黒鍵	●	●	●
30 03 70 95 08 02 10	DX 50 00 90	Top Lid(Front)	屋根（前）	●	●	
30 03 80 00 08 02 10	DX 50 01 00	〃 (〃)	〃			●
30 03 70 95 08 02 20	DX 50 01 10	〃 (Back)	屋根（後）	●	●	
30 03 80 00 08 02 20	DX 50 01 20	〃 (〃)	〃			●
30 03 70 95 08 39 20	DX 50 01 30	Harp Section Cover Assy	上ケース蓋 Assy	●	●	
30 03 80 00 08 39 20	DX 50 01 40	〃	〃			●
30 03 70 95 08 39 30	DX 50 01 50	Keyboard Section Cover Assy	下ケース蓋 Assy	●	●	
30 03 80 00 08 39 30	DX 50 01 60	〃	〃			●
30 03 70 95 08 17 10	DX 50 01 70	Upstop Rail	鍵盤押え	●	●	
30 03 80 00 08 17 10	DX 50 01 80	〃	〃			●
30 03 80 00 08 15 00	DX 50 01 90	Keyslip	口棒			●
30 03 71 00 08 54 60	NX 50 28 90	Bass String(Set)	巻線		●	
30 03 80 00 08 54 60	NX 50 29 00	〃 (Set)	〃			●

Since the left side parts numbers in the above description have been revised to the right side new ones, please order them with new numbers.

上記リストの部品はパーツNo.を変更しました。今後は新No.でオーダー下さい。

PARTS LIST

CONTENTS

1. Electronic Components (電気部品) 1
2. Harp Section (上本体) 3
3. Front Panel (前板) 5
4. Side Panel (左右パネル) 7
5. Keyboard Section (下本体) 9
6. Cover (蓋) 11
7. Pedal, Leg (ペダル, 脚) 13
8. Pedal Lever, Rod (ペダルレバー, ロッド) 15
9. Damper Assy (ダンパー Assy) 17
10. Hammer Assy, Whippen Assy (ハンマー, サポート Assy) 21
11. Key Assy (鍵盤 Assy) 23
12. Frame Section (フレーム部品) 27

1. Electronic Components（電気部品）

Ref. No.	Part No.	Description		部品名	CP-70	CP-70B	CP-80		
	NA 50 01 50	Circuit Board, TR		T R シート	●				
	NA 50 03 10	– do. – , TR		〃		●			
	NA 50 03 50	– do. – , TR		〃			●		
	NA 50 01 70	– do. – , DC		D C シート	●				
	NA 50 01 80	– do. – , LT		L T シート	●				
	NA 50 03 20	– do. – , PS		P S シート		●	●		
	LC 50 55 00	P.C. Board, BR		BRシートプリント基板			●		
	iG 00 13 90	IC	NJM4558DV	I C	●	●	●		
	iG 02 78 00	– do. – ➡ iG027850	FS7812L	〃		●	●		
	iG 02 78 50	– do. –	μPC78L12	〃		●	●		
	iC 04 58 30	Transistor	2SC458(C)	トランジスタ		●	●		
	iC 13 45 30	– do. –	2SC1345(D)	〃	●				
	iE 00 00 10	FET	2SK30A-Y	F E T	●	●	●		
	iF 00 00 40	Diode	1S1555	ダイオード		●	●		
	iF 00 06 00	LED	BD-301RR	L E D		●	●		
	iF 00 06 50	Zener Diode	WZ162	ツェナーダイオード		●	●		
	iF 00 08 80	– do. –	WZ050	〃	●	●	●		
	iH 00 02 40	Diode	1S1885	ダイオード	●				
	iK 00 01 50	Photo-Coupler	MCD527	フォトカプラー	●				
	iK 00 01 80	– do. – (Low Noise)	MCD527	〃		●	●		
	HS 42 01 10	Variable Resistor (Volume)	A100KΩ x 2	可変抵抗器	●	●	●		
	HS 42 01 20	– do. – (Bass)	A50KΩ	〃	●	●	●		
	HS 42 01 30	– do. – (Middle)	A1KΩ	〃	●	●	●		
	HS 42 01 40	– do. – (Treble)	B10KΩ	〃	●	●	●		
	HS 42 01 50	– do. – (Speed)	B100KΩ x 2	〃	●	●	●		
	HS 42 01 60	– do. – (Depth)	C20KΩ x 2	〃	●	●	●		
	HT 41 00 70	Semi Variable Resistor	B10KΩ	半固定抵抗	●	●	●		
	HT 41 00 80	– do. –	B22KΩ	〃	●	●	●		
	HT 41 00 90	– do. –	B100KΩ	〃		●	●		
	FM 11 61 00	B.P. Capacitor	1μF/50V	BPコンデンサ	●	●	●		
	FM 11 62 20	– do. –	2.2μF/50V	〃		●	●		
	FP 35 54 70	Tantalum Capacitor	0.47μF/35V	タンタルコン		●	●		
	GA 50 04 30	Power Transformer	(J, U, C)	電源トランス	●				
	GA 50 04 50	– do. –	(SA, AU)	〃	●				
	GA 50 04 70	– do. –	(NE)	〃	●				
	GA 50 06 10	AC Adaptor	(J)	ACアダプター		●	●		
	GA 50 06 30	– do. –	(U, C)	〃		●	●		
	GA 50 06 50	– do. –	(AU, SA)	〃		●	●		
	GA 50 06 60	– do. –	(NE)	〃		●	●		
	GA 50 06 90	– do. –	(G)	〃		●	●		
	GD 90 02 50	Line Transformer		ラントランス	●	●	●		

J: Japanese, U: U.S., C: Canadian, AU: Australian, SA: S. African, NE: N. European G: General

Ref. No.	Part No.	Description			部品名	CP-70	CP-70B	CP-80		
	JB 00 03 60	Pilot Lamp			パイロットランプ	●				
	KA 20 04 60	Lever Switch	(POWER)	(J, U. C)	レバースイッチ	●				
	KA 20 04 70	— do. —	(— do. —)	(SA, AU, NE)	〃	●				
	KA 20 05 70	— do. —	(BRILLIANCE)		〃			●		
	KA 20 07 00	— do. —	(TREMOLO)		〃	●	●	●		
	KA 40 06 10	Slide Switch	(POWER)		スライドスイッチ		●	●		
	KB 00 02 00	Fuse	125V 0.5A	(J)	ヒューズ	●				
	KB 00 03 10	— do. —	250V 0.5A	(SA, AU)	〃	●				
	KB 00 07 10	— do. —	— do. — (Mini)	(NE)	〃	●				
	KB 00 10 10	— do. —	— do. —	(U, C)	〃	●				
	LB 20 06 30	Phone Jack	(OUTPUT)		フォーンジャック	●	●	●		
	LB 20 08 60	— do. —	(PATCH)		〃		●	●		
	LB 20 11 70	— do. —	(— do. —)		〃	●				
	LB 30 01 60	Connector	XLR3-32	(3P Male)	キャノンソケット	●	●	●		
	LB 20 07 60	— do. —	XLR2-32	(2P Male)	〃		●	●		
	LB 20 07 80	— do. —	XLR2-11C	(2P Female)	キャノンプラグ		●	●		
	LB 30 05 60	AC Socket			ACソケット	●				
	BD 50 00 20	Piezoelectric Pickup			ピックアップユニット		●	●		
	BD 50 05 10	— do. —	➡ BD500020		〃	●				
	MG 00 05 60	AC Cord		(J)	電源コード	●				
	MG 00 05 80	— do. —		(U, C)	〃	●				
	MG 00 03 60	— do. —		(NE)	〃	●				
	MZ 80 06 50	— do. —		(SA)	〃	●				
	MZ 80 17 40	— do. —		(AU)	〃	●				
	FZ 00 01 10	Spark Suppressor Cap.		(J, U)	スパークキラー	●				
	FZ 00 09 50	— do. —		(C)	〃	●				

J: Japanese, U: U.S., C: Canadian, AU: Australian, SA: S. African, NE: N. European, G: General

2. Harp Section（上本体）

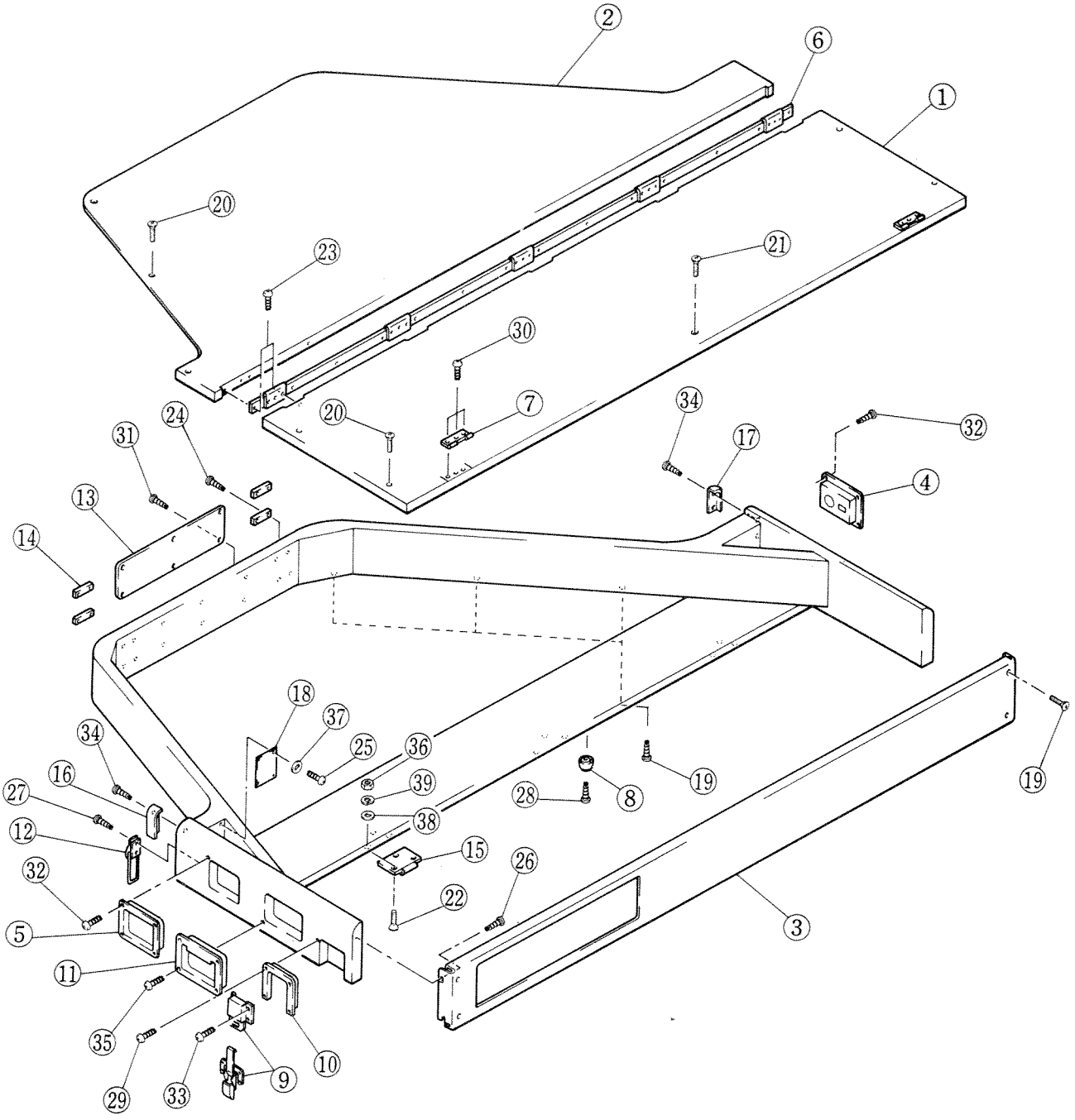

Ref. No.	Part No.	Description		部品名	CP-70	CP-70B	CP-80		
1	DX 50 00 90	Top Lid (Front)		屋根（前）	●	●			
〃	DX 50 01 00	– do. – (– do. –)		〃			●		
2	DX 50 01 10	– do. – (Back)		屋根（後）	●	●			
〃	DX 50 01 20	– do. – (– do. –)		〃			●		
3	AA 50 18 60	Front Board		前板	●				
〃	AA 50 18 70	– do. –		〃			●		
〃	AA 50 19 50	– do. –		〃		●			
4	AA 50 08 60	Panel (Right)		パネル（右）	●				
〃	AA 50 19 40	– do. – (– do. –)		〃		●	●		
5	AA 50 20 40	– do. – (Left)		パネル（左）	●	●	●		
6	BB 50 02 00	Long Hinge		ロングヒンジ	●	●			
〃	BX 50 00 30	– do. –		〃			●		
7	AA 50 16 50	Top Hinge (Female)		中開蝶番（メス）	●	●	●		
8	CB 07 83 90	Foot		脚	●	●	●		
9	AA 50 15 90	Latch (Set)		スーパークランプ	●	●	●		
10	CX 50 00 30	Latch Cover		クランプカバー（2）	●	●	●		
11	AA 50 17 70	Handle		把手	●	●	●		
12	AA 50 16 20	Latch (Male)		セミパッチン（オス）	●	●	●		
13	BA 50 00 60	Name Plate		ネームプレート	●	●	●		
14	CB 50 08 10	Foot		滑り具	●	●	●		
15	AA 50 13 10	Dissection Hinge (Male)		解体式蝶番（オス）	●	●	●		
16	AA 50 11 80	Metal Corner (2L)		コーナー金具（2L）	●	●	●		
17	AA 50 15 10	– do. – (2R)		〃（2R）	●	●	●		
18	NA 50 01 80	Circuit Board, LT		LTシート	●				
19	EF 35 02 00	Oval Head Screw	M5 x 20 BL	丸皿小ネジ	●	●	●		
20	EF 35 02 50	– do. –	M5 x 25 BL	〃	●	●	●		
21	EF 35 03 00	– do. –	M5 x 30 BL	〃	●	●	●		
22	EF 35 03 50	– do. –	M5 x 35 BL	〃	●	●	●		
23	EP 32 41 60	Flat Head Wood Screw	2.4 x 16 BL	皿木ネジ	●	●	●		
24	EP 33 51 60	– do. –	3.5 x 16 BL	〃	●	●	●		
25	EQ 03 11 30	Round Head Wood Screw	3.1 x 13 YE	丸木ネジ	●				
26	EQ 03 51 60	– do. –	3.5 x 16 YE	〃			●		
27	EQ 32 71 60	– do. –	2.7 x 16 BL	〃	●	●	●		
28	EQ 33 12 00	– do. –	3.1 x 20 BL	〃	●	●	●		
29	ER 32 71 30	Oval Head Wood Screw	2.7 x 13 BL	丸皿木ネジ	●	●	●		
30	ER 32 71 60	– do. –	2.7 x 16 BL	〃	●	●	●		
31	ER 33 11 30	– do. –	3.1 x 13 BL	〃	●	●	●		
32	ER 33 11 60	– do. –	3.1 x 16 BL	〃	●	●	●		
33	ER 33 51 60	– do. –	3.5 x 16 BL	〃	●	●	●		
34	ER 33 52 00	– do. –	3.5 x 20 BL	〃	●	●	●		
35	ER 34 12 50	– do. –	4.1 x 25 BL	〃	●	●	●		
36	EV 10 00 50	Hexagonal Nut	M5 YE	六角ナット	●	●	●		
37	EV 20 00 30	Flat Washer	3S YE	平座金	●				
38	EV 20 00 50	– do. –	5S YE	〃	●	●	●		
39	EV 30 00 50	Spring Lock Washer	5S YE	バネ座金	●	●	●		

3. Front Panel (前板)

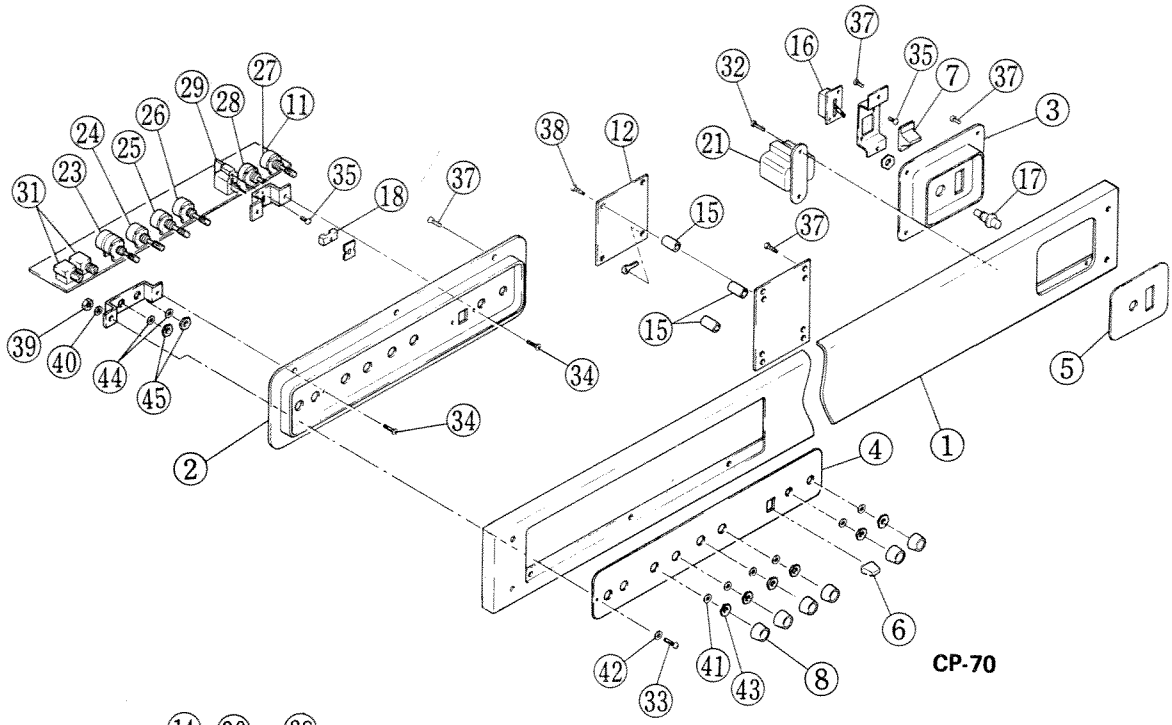

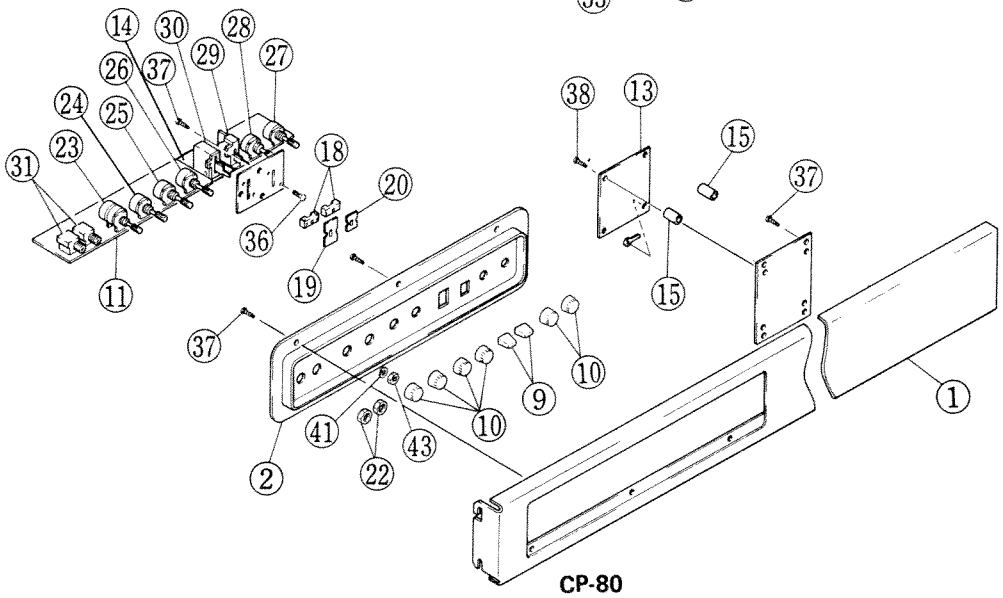

Ref. No.	Part No.	Description	部 品 名	CP-70	CP-70B	CP-80		
1	AA 50 18 60	Front Panel	前 板	●				
"	AA 50 19 50	– do. –	〃		●			
"	AA 50 18 70	– do. –	〃			●		
2	CB 50 07 30	Control Panel, (A)	操作パネル (A)	●	●			
3	CB 50 07 40	– do. – , (B)	〃 (B)	●				
"	CB 50 13 40	– do. –	〃			●		
4	AA 50 11 00	Control Panel, (A)	操作パネル化粧 (A)	●	●			
5	AA 50 11 10	– do. – , (B)	〃 (B)	●				

J: Japanese, U: U.S., C: Canadian, AU: Australian, SA: S. African, NE: N. European, G: General

Ref. No.	Part No.	Description		部品名	CP-70	CP-70B	CP-80		
6	CB 07 38 40	Knob	TREMOLO	ツマミ	●	●			
7	CB 07 66 60	– do. –	POWER	〃	●				
8	CB 80 08 20	– do. –	VR	〃	●	●			
9	CB 50 14 20	– do. –	TREMOLO BRILLIANCE	〃			●		
10	CB 81 17 80	– do. –	VR	〃			●		
11	NA 50 01 50	Circuit Board, TR		TRシート	●				
〃	NA 50 03 10	– do. – , – do. –		〃		●			
〃	NA 50 03 50	– do. – , – do. –		〃			●		
12	NA 50 01 70	– do. – , DC		DCシート	●				
13	NA 50 03 20	– do. – , PS		PSシート		●	●		
14	LC 50 55 00	P.C. Board, BR		BRシートプリント基板			●		
15	CB 01 09 80	Spacer		スペーサー	●	●	●		
16	KA 20 04 60	Lever Switch (POWER)	(J, U, C)	レバースイッチ	●				
〃	KA 20 04 70	– do. – (– do. –)	(SA, AU, NE)	〃	●				
17	JB 00 03 60	Pilot Lamp		パイロットランプ	●				
18	CB 06 85 80	Bushing, Switch		ブッシュ	●	●			
〃	CB 50 14 30	– do. –		〃			●		
19	CB 50 14 40	Apron, Switch (L)	BR SW	スイッチエプロン（L）			●		
20	CB 50 14 50	– do. – (S)	TR SW	〃 （S）			●		
21	GA 50 04 30	Power Transformer	(J, U, C)	電源トランス	●				
〃	GA 50 04 50	– do. –	(SA, AU)	〃	●				
〃	GA 50 04 70	– do. –	(NE)	〃	●				
22	CB 06 20 10	Phone Nut	➡ BA500360	ホーンナット		●	●		
〃	BA 50 03 60	– do. –		〃		●	●		
23	HS 42 01 10	Variable Resistor (Volume)	A100KΩ x 2	可変抵抗器	●	●	●		
24	HS 42 01 20	– do. – (Bass)	A50KΩ	〃	●	●	●		
25	HS 42 01 30	– do. – (Middle)	A1KΩ	〃	●	●	●		
26	HS 42 01 40	– do. – (Treble)	B10KΩ	〃	●	●	●		
27	HS 42 01 50	– do. – (Speed)	B100KΩ x 2	〃	●	●	●		
28	HS 42 01 60	– do. – (Depth)	C20KΩ	〃	●	●	●		
29	KA 20 07 00	Lever Switch	TREMOLO	レバースイッチ	●	●	●		
30	KA 20 05 70	– do. –	BRILLIANCE	〃			●		
31	LB 20 11 70	Phone Jack	PATCH	ホーンジャック	●				
〃	LB 20 08 60	– do. –	– do. –	〃		●	●		
32	EA 03 00 80	Pan Head Screw	M3 x 8 YE	ナベ小ネジ	●				
33	EA 34 01 40	– do. –	M4 x 14 BL	〃	●	●			
34	EB 03 00 60	Flat Head Screw	M3 x 6 YE	皿小ネジ	●	●			
35	ED 03 00 60	Bind Screw	M3 x 6 YE	バインド小ネジ	●	●			
36	ED 03 00 80	– do. –	M3 x 8 BL	〃			●		
37	Ei 03 00 80	Bind Tapping Screw	3 x 8 YE	バインドタッピングネジ	●	●	●		
38	Ei 03 01 40	Bind Tapping Screw	3 x 14 YE	バインドタッピングネジ	●	●	●		
39	EV 10 00 40	Hexagonal Nut	M4 YE	六角ナット	●	●			
40	EV 20 00 40	Flat Washer	4S YE	平座金	●	●			
41	EV 22 00 80	– do. –	8S	特殊平座金	●	●	●		
42	EV 41 00 40	Toothed Lock Washer	A4S	歯付座金	●	●			
43	EZ 30 80 10	Hexagonal Nut	M8	特殊六角ナット	●	●	●		
44	LX 20 00 10	Flat Washer	9S	特殊平座金	●				
45	LX 20 00 60	Hexagonal Nut	M9	特殊六角ナット	●				

4. Side Panel（左右パネル）

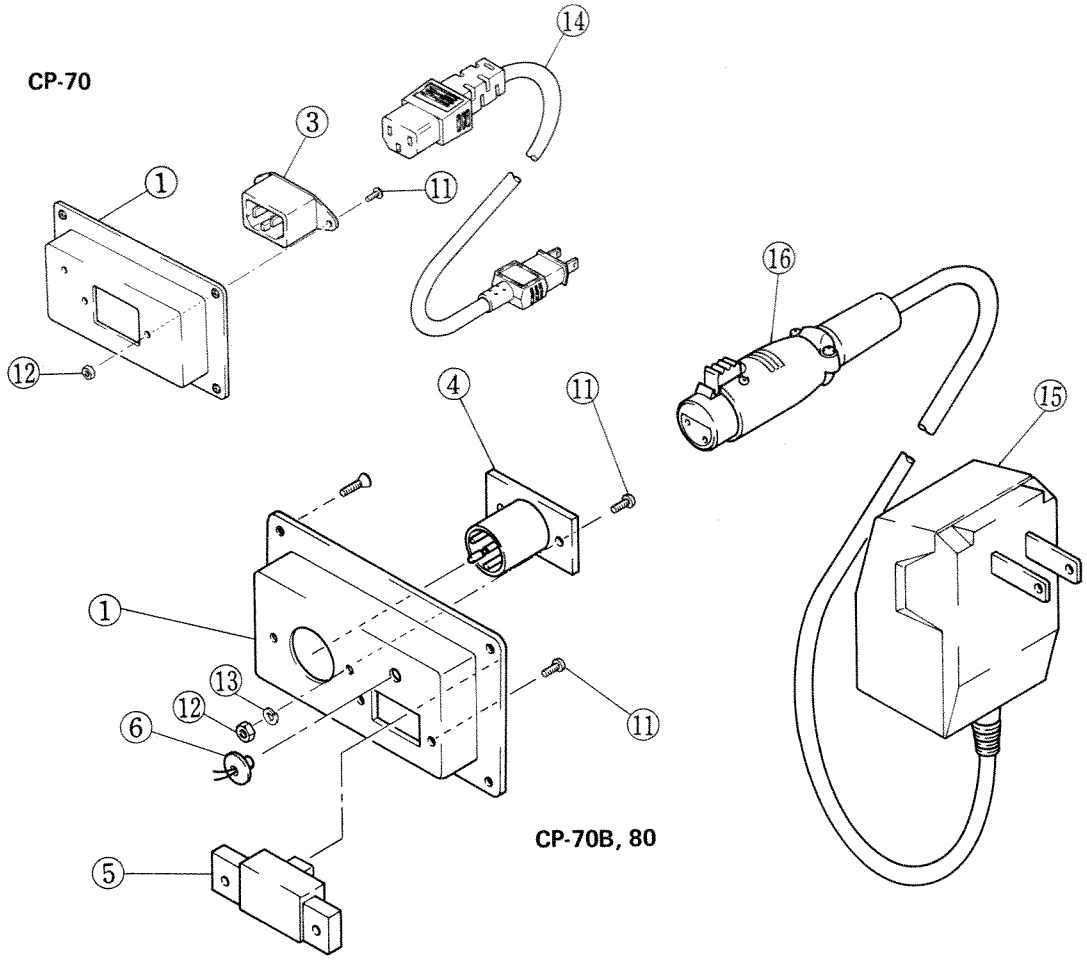

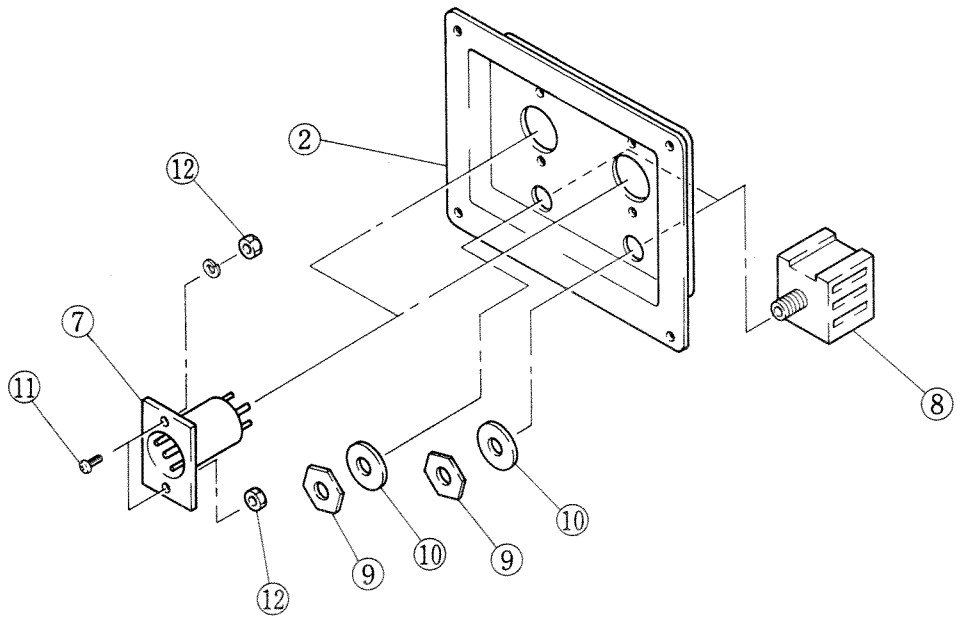

Ref. No.	Part No.	Description		部品名	CP-70	CP-70B	CP-80		
1	AA 50 08 60	Panel	(Right)	パネル(右)	●				
〃	AA 50 19 40	— do. —	(— do. —)	〃		●	●		
2	AA 50 20 40	— do. —	(Left)	パネル(左)	●	●	●		
3	LB 30 05 60	AC Socket		ACソケット	●				
4	LB 20 07 60	Connector	XLR-2-32	キャノンソケット		●	●		
5	KA 40 06 10	Slide Switch	POWER	スライドスイッチ		●	●		
6	iF 00 06 00	LED	BD-301RR POWER IND.	LED		●	●		
7	LB 30 01 60	Connector	XLR-3-32	キャノンソケット	●	●	●		
8	LB 20 06 30	Phone Jack		ホーンジャック	●	●	●		
9	CB 06 20 10	Phone Nut	➡ BA500360	ホーンナット	●	●	●		
〃	BA 50 03 60	— do. —		〃	●	●	●		
10	EK 00 23 70	Fiber Washer		ファイバーワッシャー	●	●	●		
11	EA 23 01 00	Pan Head Screw	M3 x 10 CR	ナベ小ネジ	●				
〃	EF 23 01 00	Oval Head Screw	M3 x 10 CR	丸皿小ネジ		●	●		
12	EV 10 00 30	Hexagonal Nut	M3 YE	六角ナット	●	●	●		
13	EV 30 00 30	Spring Lock Washer	3S YE	バネ座金		●	●		
14	MG 00 05 60	AC Cord	(J)	電源コード	●				
〃	MG 00 05 80	— do. —	(U, C)	〃	●				
〃	MG 00 03 60	— do. —	(NE)	〃	●				
〃	MZ 80 06 50	— do. —	(SA)	〃	●				
〃	MZ 80 17 40	— do. —	(AU)	〃	●				
15	GA 50 06 10	AC Adaptor	For 100V (J)	ACアダプター		●	●		
〃	GA 50 06 30	— do. —	For 120V (U, C)	〃		●	●		
〃	GA 50 06 50	— do. —	For 220V (AU, SA)	〃		●	●		
〃	GA 50 06 60	— do. —	For 220V (NE)	〃		●	●		
〃	GA 50 06 90	— do. —	For 200V (G)	〃		●	●		
16	LB 20 07 80	Connector	XLR-2-11C	キャノンプラグ		●	●		

J: Japanese, U: U.S., C: Canadian, AU: Australian, SA: S. African, NE: N. European, G: General

5. Keyboard Section（下本体）

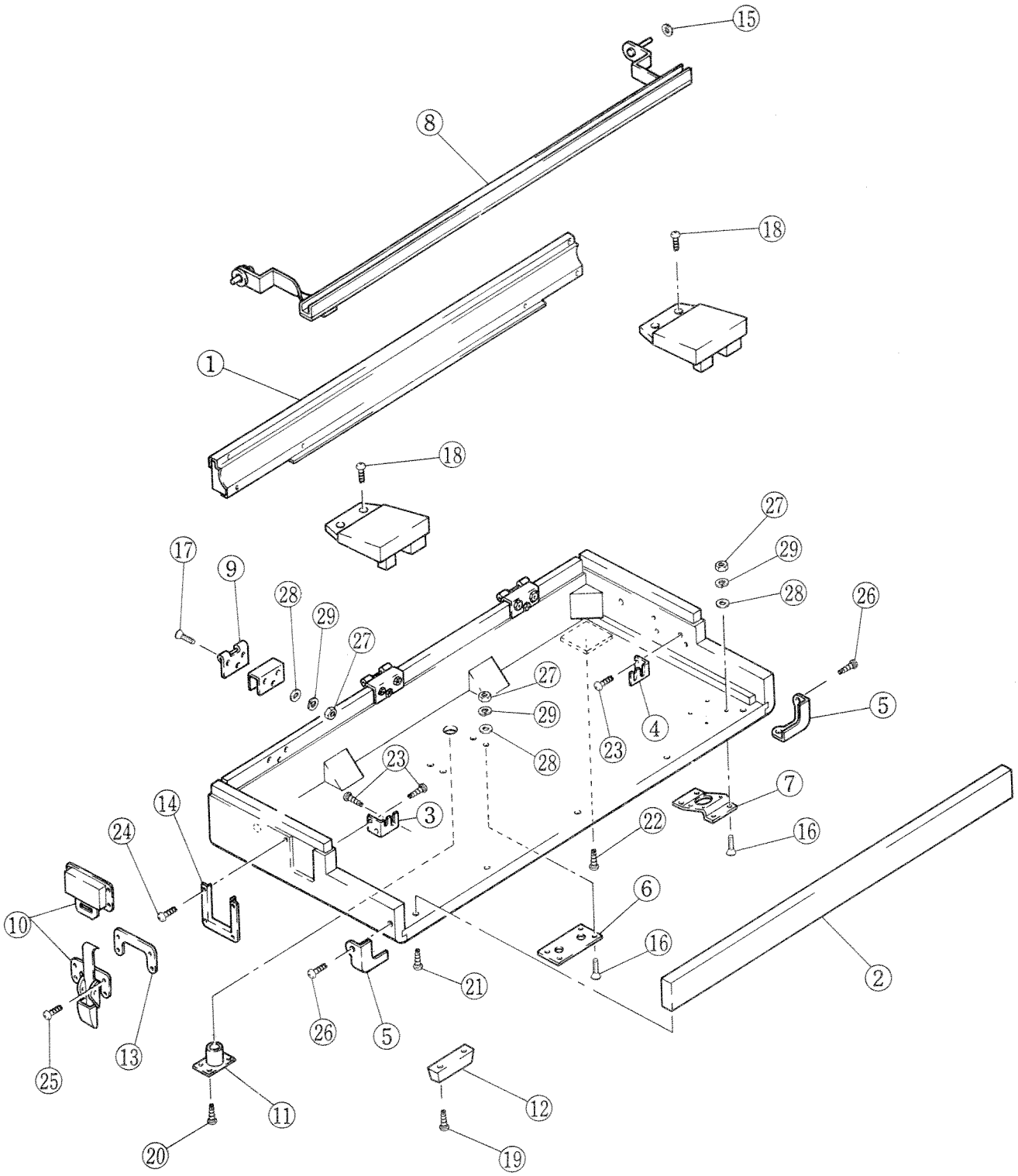

Ref. No.	Part No.	Description			部品名	CP-70	CP-70B	CP-80		
1	DX 50 01 70	Upstop Rail			鍵盤押え	●	●			
〃	DX 50 01 80	– do. –			〃			●		
2	DB 50 22 70	Keyslip			口棒	●	●			
〃	DX 50 01 90	– do. –			〃			●		
3	AA 50 11 40	Upstop Rail Holder (L)			鍵盤押え取付金具(左)	●	●	●		
4	AA 50 14 90	– do. – (R)			〃 (右)	●	●	●		
5	AA 50 11 70	Metal Corner (1)			コーナー金具 (1)	●	●	●		
6	AA 50 12 00	Leg Brace Plate			脚ステイ取付座板	●	●			
〃	AA 50 21 70	– do. –			〃			●		
7	AA 50 12 30	Leg Anchor Plate			脚パイプ取付座板	●	●	●		
8	AA 50 12 80	Hammer Shank Stopper			ハンマーシャンク押え	●	●			
〃	AA 50 21 60	– do. –			〃			●		
9	AA 50 13 20	Dissection Hinge (Female)			解体式蝶番(メス)	●	●	●		
10	AA 50 15 90	Latch (Set)			スーパークランプ(オス)	●	●	●		
11	AA 97 00 30	Pedal Rod Guide			突上棒ガイド	●	●	●		
12	CB 50 08 10	Foot			滑り具	●	●	●		
13	CB 50 13 30	Latch Spacer			クランプスペーサー	●	●	●		
14	CX 50 00 20	Latch Cover (1)			クランプカバー (1)	●	●	●		
15	CD 06 01 30	Punching Cloth			シャンク押えパンチング	●	●	●		
16	EB 35 02 00	Flat Head Screw	M5 x 20	BL	皿小ネジ	●				
〃	EB 35 03 00	– do. –	M5 x 30	BL	〃		●	●		
17	EF 35 03 50	Oval Head Screw	M5 x 35	BL	丸皿小ネジ	●	●	●		
18	EP 16 26 30	Flat Head Wood Screw	6.2 x 63	NI	皿木ネジ	●	●	●		
19	EP 33 51 60	– do. –	3.5 x 16	BL	〃	●	●	●		
20	EP 33 52 00	– do. –	3.5 x 20	BL	〃	●	●	●		
21	EP 34 14 00	– do. –	4.1 x 40	BL	〃	●				
〃	EP 34 55 60	– do. –	4.5 x 56	BL	〃		●	●		
22	EP 34 54 50	– do. –	4.5 x 45	BL	〃	●				
〃	EP 35 13 20	– do. –	5.1 x 32	BL	〃		●			
23	EQ 03 51 60	Round Head Wood Screw	3.5 x 16	YE	丸木ネジ	●	●	●		
24	ER 32 71 30	Oval Head Wood Screw	2.7 x 13	BL	丸皿木ネジ	●	●	●		
25	ER 33 51 60	– do. –	3.5 x 16	BL	〃	●	●	●		
26	ER 33 52 00	– do. –	3.5 x 20	BL	〃	●	●	●		
27	EV 10 00 50	Hexagonal Nut	M5	YE	六角ナット	●	●	●		
28	EV 20 00 50	Flat Washer	5S	YE	平座金	●	●	●		
29	EV 30 00 50	Spring Lock Washer	5S	YE	バネ座金	●	●	●		

6. Cover（蓋）

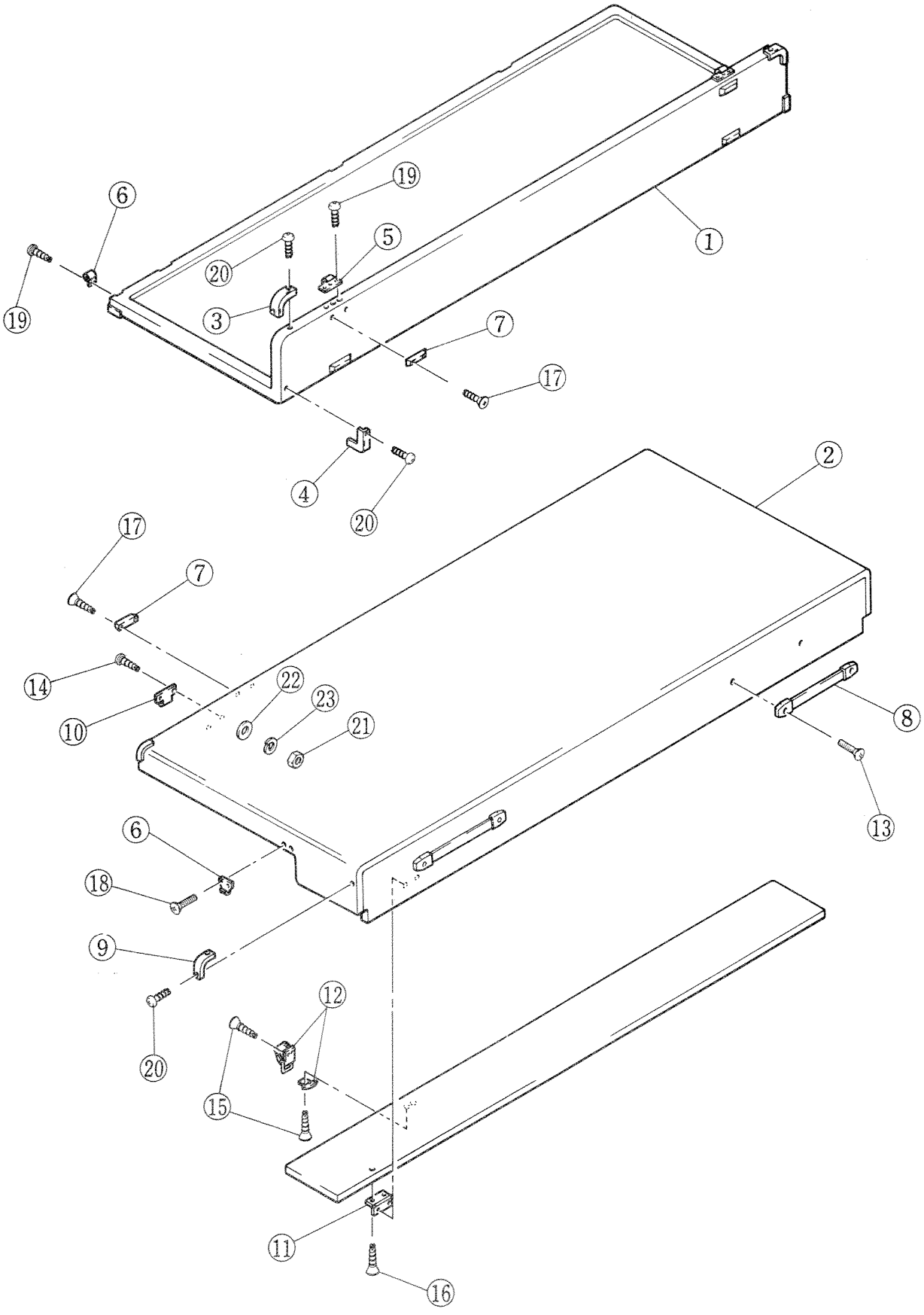

Ref. No.	Part No.	Description		部品名	CP-70	CP-70B	CP-80		
1	DX 50 01 30	Harp Section Cover Assy		上ケース蓋 Ass'y	●	●			
"	DX 50 01 40	– do. –		"			●		
2	DX 50 01 50	Keyboard Section Cover Assy		下ケース蓋 Ass'y	●	●			
"	DX 50 01 60	– do. –		"			●		
3	AA 50 11 70	Metal Corner (1)		コーナー金具 (1)	●	●	●		
4	AA 50 11 90	– do. – (3)		" (3)	●	●	●		
5	AA 50 16 30	Open Hinge (Male)		中開蝶番(オス)	●	●	●		
6	AA 50 16 10	Latch (Female)		セミパッチン(メス)	●	●	●		
7	CB 50 08 10	Foot		滑り具	●	●	●		
8	NB 50 17 20	Handle Assy		取手 Ass'y	●	●	●		
9	AA 50 11 70	Metal Corner (1)		コーナー金具 (1)	●	●	●		
10	AA 50 13 10	Dissection Hinge (Male)		解体式蝶番(オス)	●	●	●		
11	AA 50 17 80	Hinge		短蝶番	●	●	●		
12	AA 50 17 90	Latch		パッチン(一式)	●	●	●		
13	EF 35 03 00	Oval Head Screw	M5 x 30 BL	丸皿小ネジ	●	●	●		
14	EF 35 03 50	– do. –	M5 x 35 BL	"	●	●	●		
15	EP 23 52 00	Flat Head Wood Screw	3.5 x 20 CR	皿木ネジ	●	●	●		
16	EP 32 71 00	– do. –	2.7 x 10 BL	"	●	●	●		
17	EP 33 51 60	– do. –	3.5 x 16 BL	"	●	●	●		
18	ER 32 41 30	Oval Head Wood Screw	2.4 x 13 BL	丸皿木ネジ	●	●	●		
19	ER 32 71 60	– do. –	2.7 x 16 BL	"	●	●	●		
20	ER 33 52 00	– do. –	3.5 x 20 BL	"	●	●	●		
21	EV 10 00 50	Hexagonal Nut	M5 YE	六角ナット	●	●	●		
22	EV 20 00 50	Flat Washer	5S YE	平座金	●	●	●		
23	EV 30 00 50	Spring Lock Washer	5S YE	バネ座金	●	●	●		

7. Pedal, Leg（ペダル，脚）

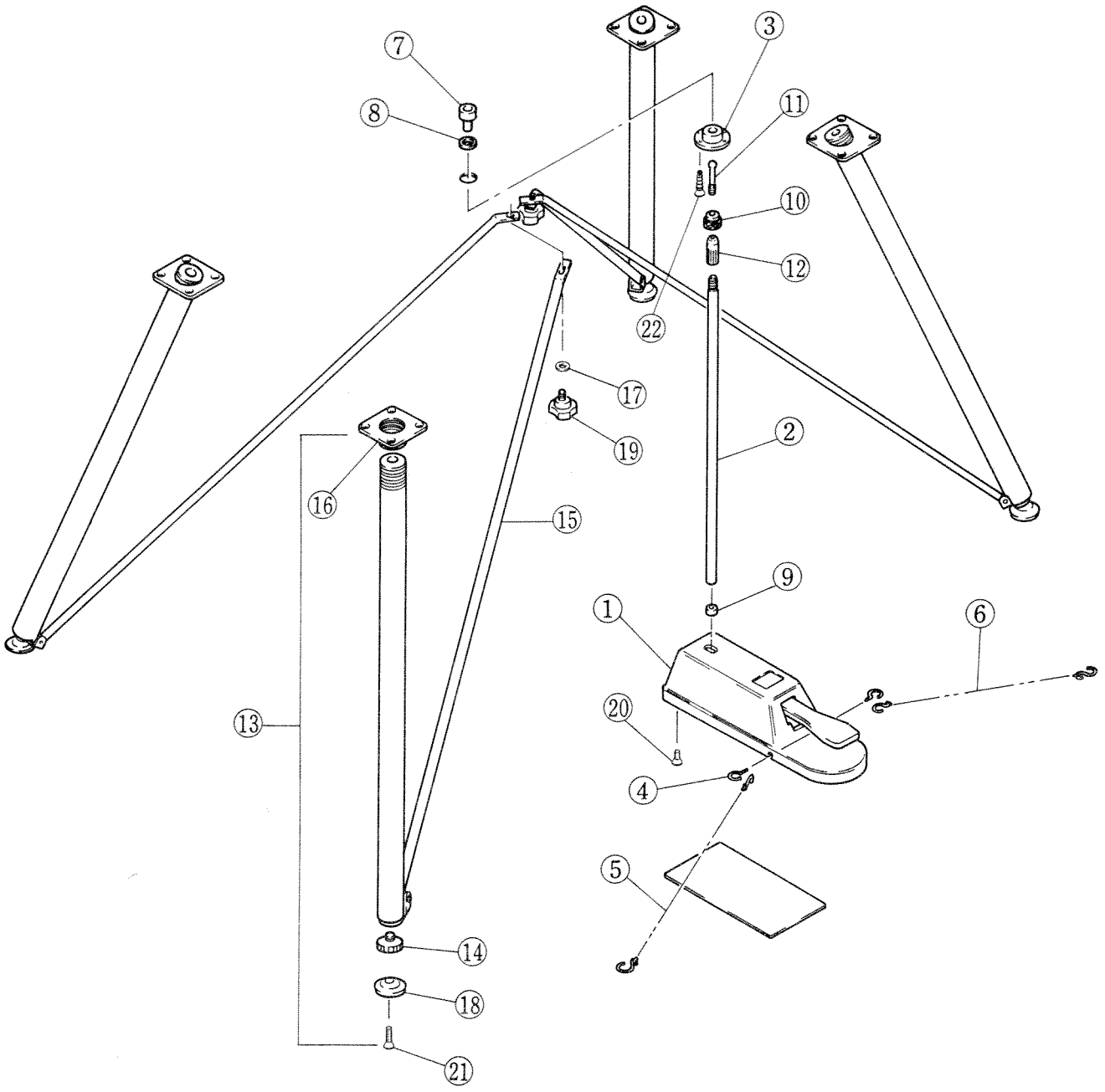

Ref. No.	Part No.	Description		部品名	CP-70	CP-70B	CP-80		
1	NB 50 19 20	Pedal Assy (without Pedal Chain)		ペダル Ass'y	●	●	●		
2	AA 97 00 20	Pedal Rod (Long)		突上棒(長)	●	●	●		
3	AA 97 00 30	Pedal Rod Guide		突上棒ガイド	●	●	●		
4	AA 97 00 90	Hook Bolt		フックボルト	●	●	●		
5	AA 99 01 08	Pedal Chain (Long)		ペダルクサリ(長)	●	●			
〃	AA 99 01 28	— do. — (— do. —)		〃			●		
6	AA 99 01 18	— do. — (Short)		〃 (短)	●	●			
〃	AA 99 01 38	— do. — (— do. —)		〃			●		
7	CB 95 00 20	Rod Button		突上棒ボタン	●	●	●		
8	CB 95 00 30	Button Punching (Large)		ボタンパンチング(大)	●	●	●		
9	CB 95 00 50	Pedal Rubber Bushing		ペダルゴム軸	●	●	●		
10	EZ 50 00 00	Rod Nut		突上棒ナット	●	●	●		
11	EZ 50 00 10	Rod Bolt		突上棒球ボルト	●	●	●		
12	EZ 50 00 20	Rod Connection Nut		突上棒連結ナット	●	●	●		
13	NB 50 17 60	Leg Pipe Assy		脚パイプ Ass'y	●	●	●		
14	AA 50 12 10	Brace Locking Nut		調整ナット	●	●	●		
15	AA 50 12 50	Brace		脚ステイ	●	●	●		
16	AA 50 14 80	Leg Anchor		脚パイプ取付座板	●	●	●		
17	AA 50 18 00	Stay Ring		脚柱リング	●	●	●		
18	AA 50 19 20	Foot		調整座	●	●	●		
19	CB 50 09 40	Knob Bolt		ノブネジ	●	●	●		
20	EB 03 00 70	Flat Head Screw	M3 x 7 YE	皿小ネジ	●	●	●		
21	EB 25 02 00	— do. —	M5 x 20 CR	〃	●	●	●		
22	EP 33 52 00	Flat Head Wood Screw	3.5 x 20 BL	皿木ネジ	●	●	●		

8. Pedal Lever, Rod（ペダルレバー，ロッド）

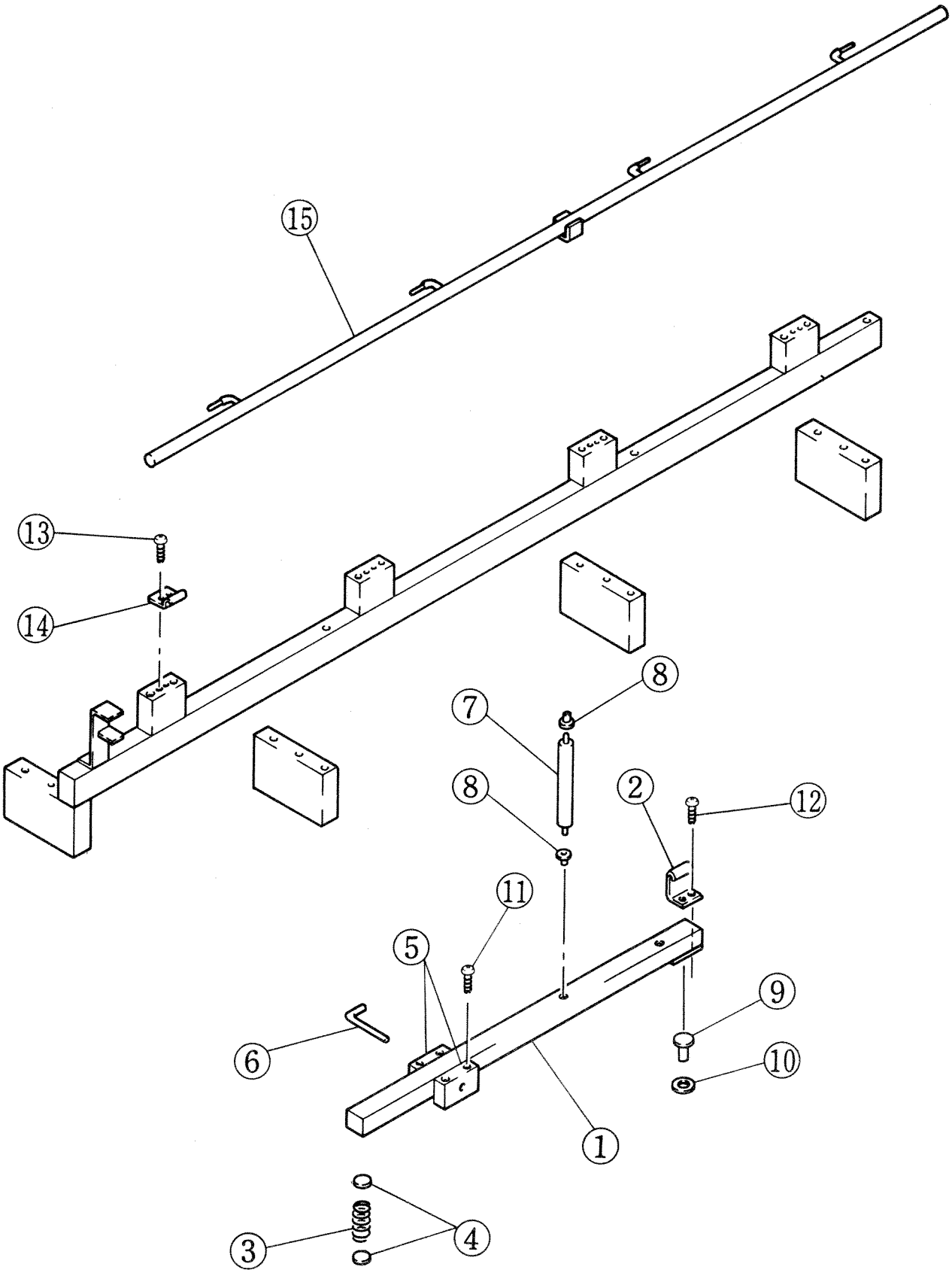

Ref. No.	Part No.	Description		部品名	CP-70	CP-70B	CP-80		
1	DB 60 00 00	Pedal Lever		ペダルレバー	●	●	●		
2	AA 97 00 40	Pedal Lever Guide		ペダルレバー振止金具	●	●	●		
3	AA 97 00 50	Pedal Lever Spring		ペダルレバー巻バネ	●	●	●		
4	CB 95 00 40	Pedal Lever Punching		ペダルレバーパンチング	●	●	●		
5	DB 60 00 20	Pedal Lever Block		ペダルメタル	●	●	●		
6	AA 97 00 60	Pedal Lever Pin		曲金	●	●	●		
7	DB 60 00 10	Pedal Rod		突上棒(小)	●	●	●		
8	CB 90 00 00	Rubber Bushing		ゴムブッシュ	●	●	●		
9	CB 95 00 20	Rod Button		突上棒ボタン	●	●	●		
10	CB 95 00 30	Button Punching		ボタンパンチング(大)	●	●	●		
11	EP 04 14 00	Flat Head Wood Screw	4.1 x 40 YE	皿木ネジ	●	●	●		
12	EQ 03 11 30	Round Head Wood Screw	3.1 x 13 YE	丸木ネジ	●	●	●		
13	EQ 03 51 30	– do. –	3.5 x 13 YE	〃	●	●	●		
14	BA 90 00 00	Damper Rod Hinge		ダンパーロッドヒンジ	●	●	●		
15	BA 90 00 10	Damper Rod		ダンパーロッド	●	●			
〃	BX 50 00 40	– do. –		〃			●		

9. Damper Assy（ダンパー Assy）

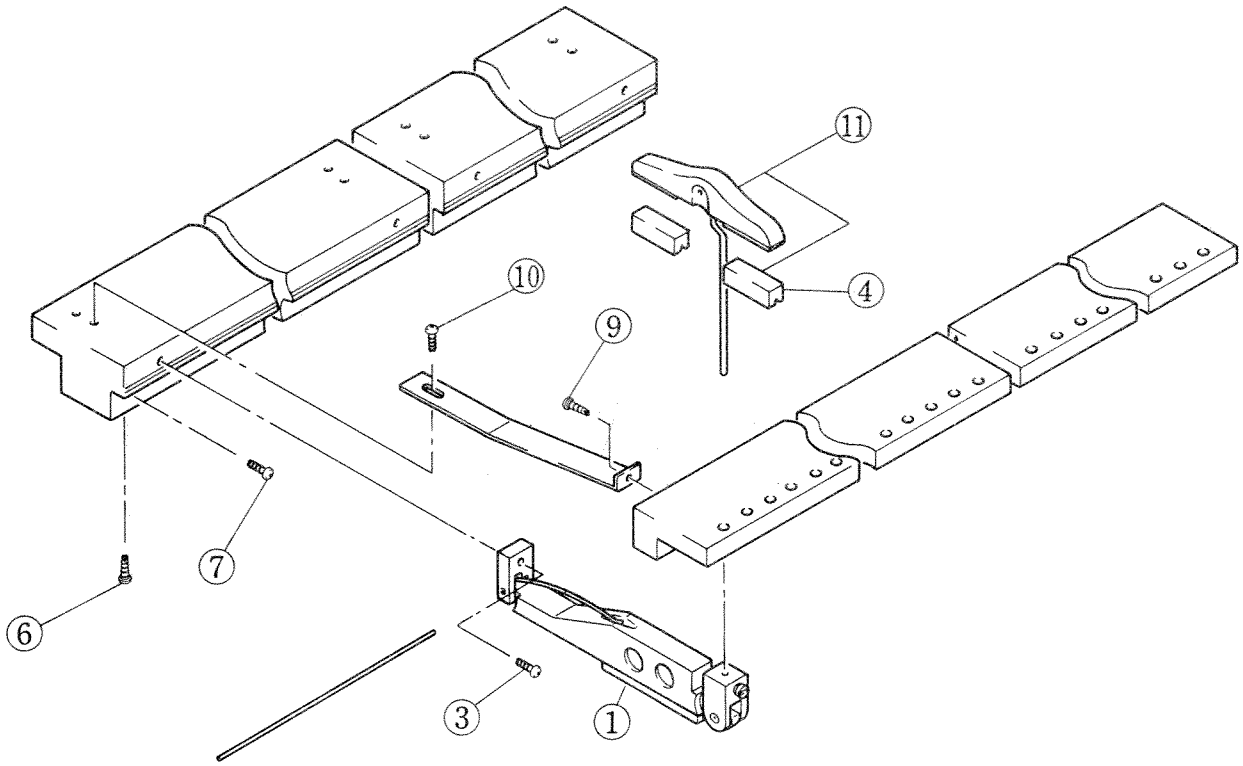

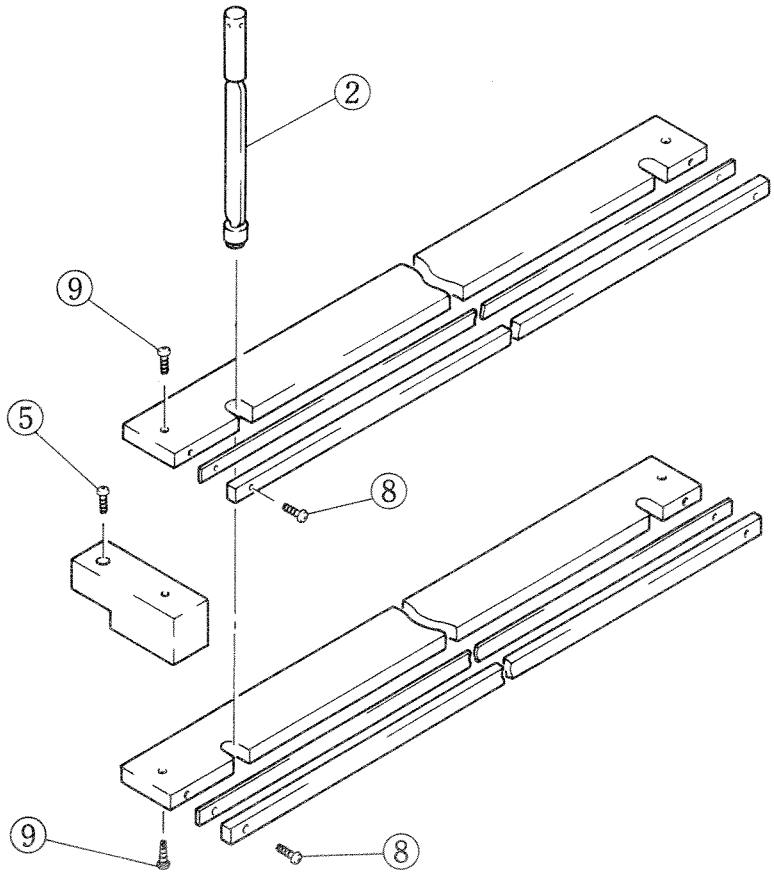

Ref. No.	Part No.	Description			部品名	CP-70	CP-70B	CP-80		
1	NB 97 01 10	Damper Lever Assy	CP-70, 70B 1E～25E	CP-80 1A～32E	ダンパーレバーAss'y	●	●	●		
"	NB 97 01 20	— do. —	26F～50F	33F～60G	"	●	●	●		
"	NB 97 01 30	— do. —	51F～64G	61A～73A	"	●	●	●		
2	NB 97 01 70	Damper Lift Post			ダンパー突上Ass'y	●	●	●		
3	AA 97 02 50	Damper Lever Screw			ダンパーレバースクリュー	●	●	●		
4	CC 90 00 30	Damper Felt			ダンパーフェルト	●	●	●		
"	CC 90 00 40	— do. —			"	●	●	●		
"	CC 90 00 50	— do. —			"	●	●	●		
5	EP 03 53 20	Flat Head Wood Screw	3.5 x 32	YE	皿木ネジ	●	●	●		
6	EP 04 12 50	— do. —	4.1 x 25	YE	"	●	●	●		
7	EP 04 14 00	— do. —	4.1 x 40	YE	"	●	●	●		
8	EQ 02 71 30	Round Head Wood Screw	2.7 x 13	YE	丸木ネジ	●	●	●		
9	EQ 03 11 30	— do. —	3.1 x 13	YE	"	●	●	●		
10	EQ 03 51 30	— do. —	3.5 x 13	YE	"	●	●	●		
11	NB 50 60 10	Damper Head Assy	Key # 1	E	ダンパーヘッド Ass'y	●	●			
"	NB 50 60 20	— do. —	Key # 2	F	"	●	●			
"	NB 50 60 30	— do. —	Key # 3	F#	"	●	●			
"	NB 50 60 40	— do. —	Key # 4	G	"	●	●			
"	NB 50 60 50	— do. —	Key # 5	G#	"	●	●			
"	NB 50 60 60	— do. —	Key # 6	A	"	●	●			
"	NB 50 60 70	— do. —	Key # 7	A#	"	●	●			
"	NB 50 60 80	— do. —	Key # 8	B	"	●	●			
"	NB 50 60 90	— do. —	Key # 9	C	"	●	●			
"	NB 50 61 00	— do. —	Key # 10	C#	"	●	●			
"	NB 50 61 10	— do. —	Key # 11	D	"	●	●			
"	NB 50 61 20	— do. —	Key # 12	D#	"	●	●			
"	NB 50 61 30	— do. —	Key # 13	E	"	●	●			
"	NB 50 61 40	— do. —	Key # 14	F	"	●	●			
"	NB 50 61 50	— do. —	Key # 15	F#	"	●	●			
"	NB 50 61 60	— do. —	Key # 16	G	"	●	●			
"	NB 50 61 70	— do. —	Key # 17	G#	"	●	●			
"	NB 50 61 80	— do. —	Key # 18	A	"	●	●			
"	NB 50 61 90	— do. —	Key # 19	A#	"	●	●			
"	NB 50 62 00	— do. —	Key # 20	B	"	●	●			
"	NB 50 62 10	— do. —	Key # 21	C	"	●	●			
"	NB 50 62 20	— do. —	Key # 22	C#	"	●	●			
"	NB 50 62 30	— do. —	Key # 23	D	"	●	●			
"	NB 50 62 40	— do. —	Key # 24	D#	"	●	●			
"	NB 50 62 50	— do. —	Key # 25	E	"	●	●			
"	NB 50 62 60	— do. —	Key # 26	F	"	●	●			
"	NB 50 62 70	— do. —	Key # 27	F#	"	●	●			
"	NB 50 62 80	— do. —	Key # 28	G	"	●	●			
"	NB 50 62 90	— do. —	Key # 29	G#	"	●	●			
"	NB 50 63 00	— do. —	Key # 30	A	"	●	●			
"	NB 50 63 10	— do. —	Key # 31	A#	"	●	●			
"	NB 50 63 20	— do. —	Key # 32	B	"	●	●			
"	NB 50 63 30	— do. —	Key # 33	C	"	●	●			
"	NB 50 63 40	— do. —	Key # 34	C#	"	●	●			
"	NB 50 63 50	— do. —	Key # 35	D	"	●	●			
"	NB 50 63 60	— do. —	Key # 36	D#	"	●	●			
"	NB 50 63 70	— do. —	Key # 37	E	"	●	●			
"	NB 50 63 80	— do. —	Key # 38	F	"	●	●			
"	NB 50 63 90	— do. —	Key # 39	F#	"	●	●			

Ref. No.	Part No.	Description	部 品 名		CP-70	CP-70B	CP-80		
11	NB 50 64 00	Damper Head Assy	Key # 40 G	ダンパーヘッド Ass'y	●	●			
〃	NB 50 64 10	– do. –	Key # 41 G#	〃	●	●			
〃	NB 50 64 20	– do. –	Key # 42 A	〃	●	●			
〃	NB 50 64 30	– do. –	Key # 43 A#	〃	●	●			
〃	NB 50 64 40	– do. –	Key # 44 B	〃	●	●			
〃	NB 50 64 50	– do. –	Key # 45 C	〃	●	●			
〃	NB 50 64 60	– do. –	Key # 46 C#	〃	●	●			
〃	NB 50 64 70	– do. –	Key # 47 D	〃	●	●			
〃	NB 50 64 80	– do. –	Key # 48 D#	〃	●	●			
〃	NB 50 64 90	– do. –	Key # 49 E	〃	●	●			
〃	NB 50 65 00	– do. –	Key # 50 F	〃	●	●			
〃	NB 50 65 10	– do. –	Key # 51 F#	〃	●	●			
〃	NB 50 65 20	– do. –	Key # 52 G	〃	●	●			
〃	NB 50 65 30	– do. –	Key # 53 G#	〃	●	●			
〃	NB 50 65 40	– do. –	Key # 54 A	〃	●	●			
〃	NB 50 65 50	– do. –	Key # 55 A#	〃	●	●			
〃	NB 50 65 60	– do. –	Key # 56 B	〃	●	●			
〃	NB 50 65 70	– do. –	Key # 57 C	〃	●	●			
〃	NB 50 65 80	– do. –	Key # 58 C#	〃	●	●			
〃	NB 50 65 90	– do. –	Key # 59 D	〃	●	●			
〃	NB 50 66 00	– do. –	Key # 60 D#	〃	●	●			
〃	NB 50 66 10	– do. –	Key # 61 E	〃	●	●			
〃	NB 50 66 20	– do. –	Key # 62 F	〃	●	●			
〃	NB 50 66 30	– do. –	Key # 63 F#	〃	●	●			
〃	NB 50 66 40	– do. –	Key # 64 G	〃	●	●			
〃	NB 50 66 50	– do. –	Key # 65 G#	〃	●	●			
〃	NB 50 66 60	– do. –	Key # 66 A	〃	●	●			
〃	NB 50 90 10	– do. –	Key # 1 A	〃			●		
〃	NB 50 90 20	– do. –	Key # 2 A#	〃			●		
〃	NB 50 90 30	– do. –	Key # 3 B	〃			●		
〃	NB 50 90 40	– do. –	Key # 4 C	〃			●		
〃	NB 50 90 50	– do. –	Key # 5 C#	〃			●		
〃	NB 50 90 60	– do. –	Key # 6 D	〃			●		
〃	NB 50 90 70	– do. –	Key # 7 D#	〃			●		
〃	NB 50 90 80	– do. –	Key # 8 E	〃			●		
〃	NB 50 90 90	– do. –	Key # 9 F	〃			●		
〃	NB 50 91 00	– do. –	Key # 10 F#	〃			●		
〃	NB 50 91 10	– do. –	Key # 11 G	〃			●		
〃	NB 50 91 20	– do. –	Key # 12 G#	〃			●		
〃	NB 50 91 30	– do. –	Key # 13 A	〃			●		
〃	NB 50 91 40	– do. –	Key # 14 A#	〃			●		
〃	NB 50 91 50	– do. –	Key # 15 B	〃			●		
〃	NB 50 91 60	– do. –	Key # 16 C	〃			●		
〃	NB 50 91 70	– do. –	Key # 17 C#	〃			●		
〃	NB 50 91 80	– do. –	Key # 18 D	〃			●		
〃	NB 50 91 90	– do. –	Key # 19 D#	〃			●		
〃	NB 50 92 00	– do. –	Key # 20 E	〃			●		
〃	NB 50 92 10	– do. –	Key # 21 F	〃			●		
〃	NB 50 92 20	– do. –	Key # 22 F#	〃			●		
〃	NB 50 92 30	– do. –	Key # 23 G	〃			●		
〃	NB 50 92 40	– do. –	Key # 24 G#	〃			●		
〃	NB 50 92 50	– do. –	Key # 25 A	〃			●		
〃	NB 50 92 60	– do. –	Key # 26 A#	〃			●		

Ref. No.	Part No.	Description		部 品 名	CP-70	CP-70B	CP-80		
11	NB 50 92 70	Damper Head Assy	Key # 27 B	ダンパーヘッド Ass'y			●		
〃	NB 50 92 80	— do. —	Key # 28 C	〃			●		
〃	NB 50 92 90	— do. —	Key # 29 C#	〃			●		
〃	NB 50 93 00	— do. —	Key # 30 D	〃			●		
〃	NB 50 93 10	— do. —	Key # 31 D#	〃			●		
〃	NB 50 93 20	— do. —	Key # 32 E	〃			●		
〃	NB 50 93 30	— do. —	Key # 33 F	〃			●		
〃	NB 50 93 40	— do. —	Key # 34 F#	〃			●		
〃	NB 50 93 50	— do. —	Key # 35 G	〃			●		
〃	NB 50 93 60	— do. —	Key # 36 G#	〃			●		
〃	NB 50 93 70	— do. —	Key # 37 A	〃			●		
〃	NB 50 93 80	— do. —	Key # 38 A#	〃			●		
〃	NB 50 93 90	— do. —	Key # 39 B	〃			●		
〃	NB 50 94 00	— do. —	Key # 40 C	〃			●		
〃	NB 50 94 10	— do. —	Key # 41 C#	〃			●		
〃	NB 50 94 20	— do. —	Key # 42 D	〃			●		
〃	NB 50 94 30	— do. —	Key # 43 D#	〃			●		
〃	NB 50 94 40	— do. —	Key # 44 E	〃			●		
〃	NB 50 94 50	— do. —	Key # 45 F	〃			●		
〃	NB 50 94 60	— do. —	Key # 46 F#	〃			●		
〃	NB 50 94 70	— do. —	Key # 47 G	〃			●		
〃	NB 50 94 80	— do. —	Key # 48 G#	〃			●		
〃	NB 50 94 90	— do. —	Key # 49 A	〃			●		
〃	NB 50 95 00	— do. —	Key # 50 A#	〃			●		
〃	NB 50 95 10	— do. —	Key # 51 B	〃			●		
〃	NB 50 95 20	— do. —	Key # 52 C	〃			●		
〃	NB 50 95 30	— do. —	Key # 53 C#	〃			●		
〃	NB 50 95 40	— do. —	Key # 54 D	〃			●		
〃	NB 50 95 50	— do. —	Key # 55 D#	〃			●		
〃	NB 50 95 60	— do. —	Key # 56 E	〃			●		
〃	NB 50 95 70	— do. —	Key # 57 F	〃			●		
〃	NB 50 95 80	— do. —	Key # 58 F#	〃			●		
〃	NB 50 95 90	— do. —	Key # 59 G	〃			●		
〃	NB 50 96 00	— do. —	Key # 60 G#	〃			●		
〃	NB 50 96 10	— do. —	Key # 61 A	〃			●		
〃	NB 50 96 20	— do. —	Key # 62 A#	〃			●		
〃	NB 50 96 30	— do. —	Key # 63 B	〃			●		
〃	NB 50 96 40	— do. —	Key # 64 C	〃			●		
〃	NB 50 96 50	— do. —	Key # 65 C#	〃			●		
〃	NB 50 96 60	— do. —	Key # 66 D	〃			●		
〃	NB 50 96 70	— do. —	Key # 67 D#	〃			●		
〃	NB 50 96 80	— do. —	Key # 68 E	〃			●		
〃	NB 50 96 90	— do. —	Key # 69 F	〃			●		
〃	NB 50 97 00	— do. —	Key # 70 F#	〃			●		
〃	NB 50 97 10	— do. —	Key # 71 G	〃			●		
〃	NB 50 97 20	— do. —	Key # 72 G#	〃			●		
〃	NB 50 97 30	— do. —	Key # 73 A	〃			●		

10. Hammer Assy, Whippen Assy（ハンマー，サポート Assy）

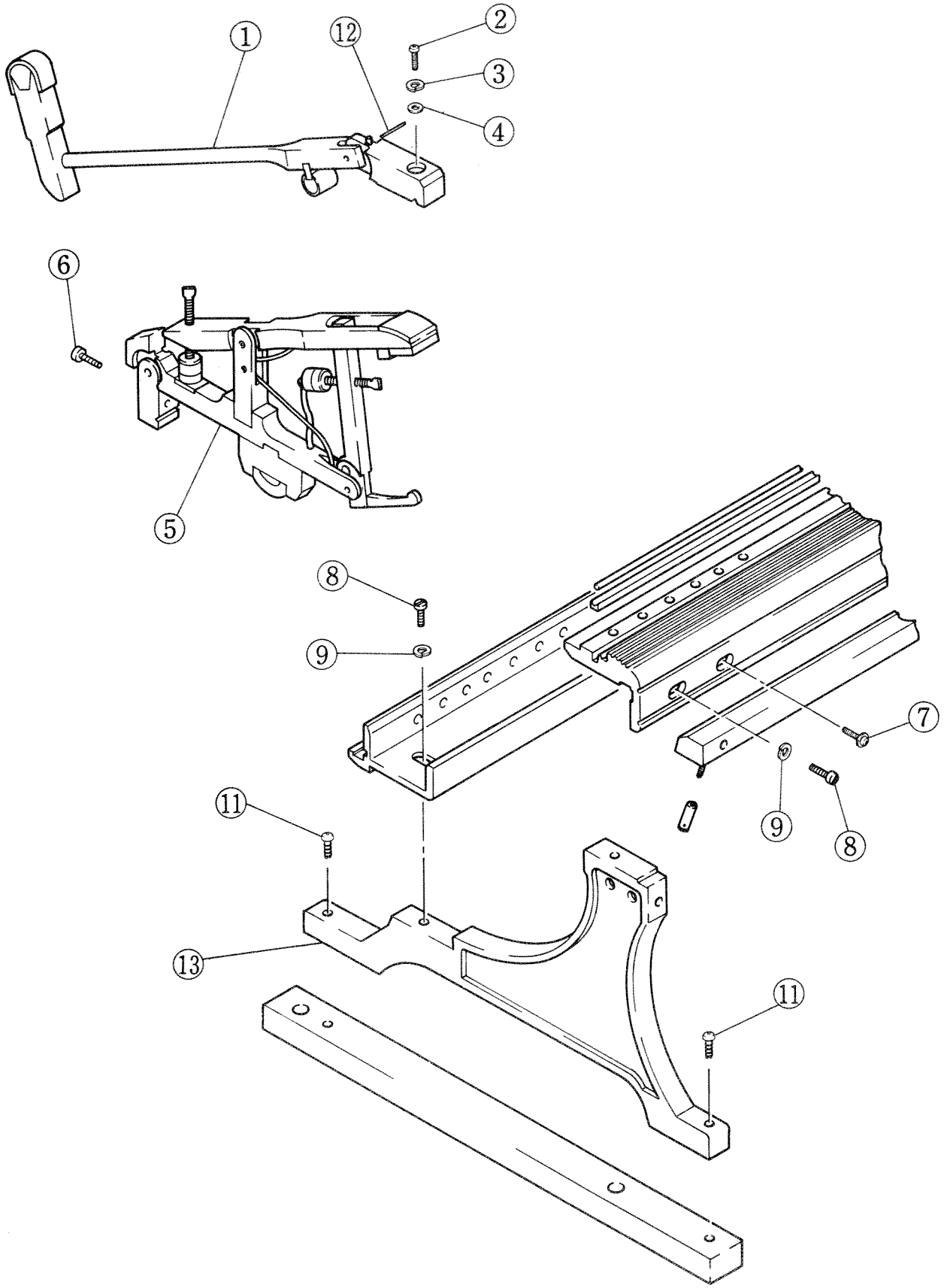

Ref. No.	Part No.	Description			部品名	CP-70	CP-70B	CP-80		
1	NB 97 00 50	Hammer Assy	CP-70, 70B 1～25 Key	CP-80 1～32 Key	ハンマー Ass'y	●	●	●		
〃	NB 97 00 60	— do. —	26～50 Key	33～58 Key	〃	●	●	●		
〃	NB 97 00 70	— do. —	51～63 Key	59～71 Key	〃	●	●	●		
〃	NB 97 00 80	— do. —	64～73 Key	72～80 Key	〃	●	●	●		
〃	NB 97 02 40	— do. —		81～82 Key	〃			●		
〃	NB 97 02 50	— do. —		83～88 Key	〃			●		
2	AA 97 01 90	Shank Flange Screw			シャンクフレンジスクリュー	●	●	●		
3	AA 97 02 00	Shank Flange Spring Washer			シャンクフレンジバネ座金	●	●	●		
4	AA 97 02 10	Shank Flange Washer			シャンクフレンジ平座金	●	●	●		
5	NB 97 00 10	Whippen Assy	CP-70, 70B 1～25 Key	CP-80 1～30 Key	サポート Ass'y	●	●	●		
〃	NB 97 00 20	— do. —	26～50 Key	31～50 Key	〃	●	●	●		
〃	NB 97 00 30	— do. —	51～73 Key	51～70 Key	〃	●	●	●		
〃	NB 97 02 30	— do. —		71～88 Key	〃			●		
6	AA 97 01 80	Whippen Flange Screw			サポートフレンジスクリュー	●	●	●		
7	AA 97 01 10	Regulating Rail Screw			レギュレチングレール取付スクリュー	●	●	●		
8	AA 97 01 50	Bracket Screw			ブラケット取付スクリュー	●	●	●		
9	AA 97 01 60	Bracket Spring Washer			スプリングワッシャー	●	●	●		
10	CB 95 00 70	Regulating Button	W/Punching		レギュレチングボタン	●	●	●		
11	EQ 03 52 50	Round Head Wood Screw (For Side Bracket)	3.5 x 25 YE		丸木ネジ	●	●	●		
〃	EQ 03 53 20	— do. — (For Middle Bracket)	3.5 x 32 YE		〃	●	●	●		
12	AA 97 02 70	Center Pin	#20 1.25		センターピン	●	●	●		
〃	AA 97 02 80	— do. —	#21 1.30		〃	●	●	●		
〃	AA 97 02 90	— do. —	#22 1.35		〃	●	●	●		
〃	AA 97 03 00	— do. —	#23 1.40		〃	●	●	●		
〃	AA 97 03 10	— do. —	#24 1.45		〃	●	●	●		
〃	AA 97 03 20	— do. —	#25 1.50		〃	●	●	●		
13	BX 50 00 10	Action Bracket (Middle)			アクションブラケット(小)	●	●	●		
〃	BX 50 00 20	— do. — (Side)			〃 (大)	●	●	●		

11. Key Assy（鍵盤 Assy）

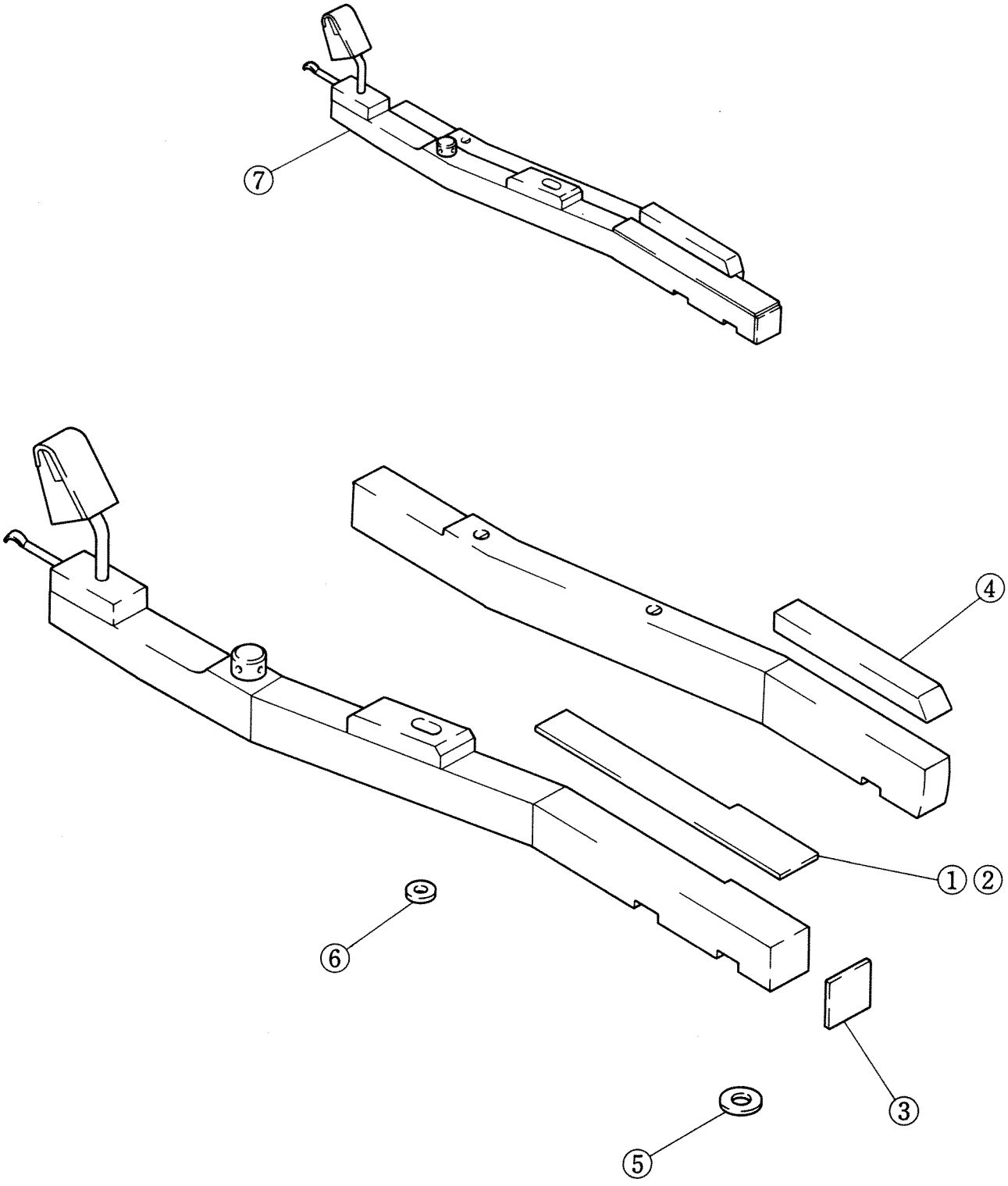

Ref. No.	Part No.	Description		部品名	CP-70	CP-70B	CP-80		
1	CB 95 01 80	White Key Top (Octave)	C, D, E, F, G, A, B	白鍵上面オクターブ	●	●	●		
2	CB 95 01 90	— do. — (Semi-Octave)	A', B, C' (E')	〃 セミオクターブ	●	●	●		
3	CB 95 02 00	White Key Front		白鍵前面	●	●	●		
4	CX 50 00 40	Black Key Top		黒鍵	●	●	●		
5	CD 06 01 30	Cloth Punching	Front	クロスパンチング	●	●	●		
6	CD 90 10 40	— do. —	Barance	〃	●	●	●		
7	NX 50 10 10	Key Assy	Key # 1 E	鍵盤 Ass'y	●	●			
〃	NX 50 10 20	— do. —	Key # 2 F	〃	●	●			
〃	NX 50 10 30	— do. —	Key # 3 F#	〃	●	●			
〃	NX 50 10 40	— do. —	Key # 4 G	〃	●	●			
〃	NX 50 10 50	— do. —	Key # 5 G#	〃	●	●			
〃	NX 50 10 60	— do. —	Key # 6 A	〃	●	●			
〃	NX 50 10 70	— do. —	Key # 7 A#	〃	●	●			
〃	NX 50 10 80	— do. —	Key # 8 B	〃	●	●			
〃	NX 50 10 90	— do. —	Key # 9 C	〃	●	●			
〃	NX 50 11 00	— do. —	Key # 10 C#	〃	●	●			
〃	NX 50 11 10	— do. —	Key # 11 D	〃	●	●			
〃	NX 50 11 20	— do. —	Key # 12 D#	〃	●	●			
〃	NX 50 11 30	— do. —	Key # 13 E	〃	●	●			
〃	NX 50 11 40	— do. —	Key # 14 F	〃	●	●			
〃	NX 50 11 50	— do. —	Key # 15 F#	〃	●	●			
〃	NX 50 11 60	— do. —	Key # 16 G	〃	●	●			
〃	NX 50 11 70	— do. —	Key # 17 G#	〃	●	●			
〃	NX 50 11 80	— do. —	Key # 18 A	〃	●	●			
〃	NX 50 11 90	— do. —	Key # 19 A#	〃	●	●			
〃	NX 50 12 00	— do. —	Key # 20 B	〃	●	●			
〃	NX 50 12 10	— do. —	Key # 21 C	〃	●	●			
〃	NX 50 12 20	— do. —	Key # 22 C#	〃	●	●			
〃	NX 50 12 30	— do. —	Key # 23 D	〃	●	●			
〃	NX 50 12 40	— do. —	Key # 24 D#	〃	●	●			
〃	NX 50 12 50	— do. —	Key # 25 E	〃	●	●			
〃	NX 50 12 60	— do. —	Key # 26 F	〃	●	●			
〃	NX 50 12 70	— do. —	Key # 27 F#	〃	●	●			
〃	NX 50 12 80	— do. —	Key # 28 G	〃	●	●			
〃	NX 50 12 90	— do. —	Key # 29 G#	〃	●	●			
〃	NX 50 13 00	— do. —	Key # 30 A	〃	●	●			
〃	NX 50 13 10	— do. —	Key # 31 A#	〃	●	●			
〃	NX 50 13 20	— do. —	Key # 32 B	〃	●	●			
〃	NX 50 13 30	— do. —	Key # 33 C	〃	●	●			
〃	NX 50 13 40	— do. —	Key # 34 C#	〃	●	●			
〃	NX 50 13 50	— do. —	Key # 35 D	〃	●	●			
〃	NX 50 13 60	— do. —	Key # 36 D#	〃	●	●			
〃	NX 50 13 70	— do. —	Key # 37 E	〃	●	●			
〃	NX 50 13 80	— do. —	Key # 38 F	〃	●	●			
〃	NX 50 13 90	— do. —	Key # 39 F#	〃	●	●			
〃	NX 50 14 00	— do. —	Key # 40 G	〃	●	●			
〃	NX 50 14 10	— do. —	Key # 41 G#	〃	●	●			
〃	NX 50 14 20	— do. —	Key # 42 A	〃	●	●			
〃	NX 50 14 30	— do. —	Key # 43 A#	〃	●	●			
〃	NX 50 14 40	— do. —	Key # 44 B	〃	●	●			
〃	NX 50 14 50	— do. —	Key # 45 C	〃	●	●			
〃	NX 50 14 60	— do. —	Key # 46 C#	〃	●	●			
〃	NX 50 14 70	— do. —	Key # 47 D	〃	●	●			
〃	NX 50 14 80	— do. —	Key # 48 D#	〃	●	●			

Ref. No.	Part No.	Description	部 品 名		CP-70	CP-70B	CP-80		
7	NX 50 14 90	Key Assy	Key # 49 E	鍵 盤 Ass'y	●	●			
"	NX 50 15 00	— do. —	Key # 50 F	"	●	●			
"	NX 50 15 10	— do. —	Key # 51 F#	"	●	●			
"	NX 50 15 20	— do. —	Key # 52 G	"	●	●			
"	NX 50 15 30	— do. —	Key # 53 G#	"	●	●			
"	NX 50 15 40	— do. —	Key # 54 A	"	●	●			
"	NX 50 15 50	— do. —	Key # 55 A#	"	●	●			
"	NX 50 15 60	— do. —	Key # 56 B	"	●	●			
"	NX 50 15 70	— do. —	Key # 57 C	"	●	●			
"	NX 50 15 80	— do. —	Key # 58 C#	"	●	●			
"	NX 50 15 90	— do. —	Key # 59 D	"	●	●			
"	NX 50 16 00	— do. —	Key # 60 D#	"	●	●			
"	NX 50 16 10	— do. —	Key # 61 E	"	●	●			
"	NX 50 16 20	— do. —	Key # 62 F	"	●	●			
"	NX 50 16 30	— do. —	Key # 63 F#	"	●	●			
"	NX 50 16 40	— do. —	Key # 64 G	"	●	●			
"	NX 50 16 50	— do. —	Key # 65 G#	"	●	●			
"	NX 50 16 60	— do. —	Key # 66 A	"	●	●			
"	NX 50 16 70	— do. —	Key # 67 A#	"	●	●			
"	NX 50 16 80	— do. —	Key # 68 B	"	●	●			
"	NX 50 16 90	— do. —	Key # 69 C	"	●	●			
"	NX 50 17 00	— do. —	Key # 70 C#	"	●	●			
"	NX 50 17 10	— do. —	Key # 71 D	"	●	●			
"	NX 50 17 20	— do. —	Key # 72 D#	"	●	●			
"	NX 50 17 30	— do. —	Key # 73 E	"	●	●			
"	NX 50 00 10	— do. —	Key # 1 A	"			●		
"	NX 50 00 20	— do. —	Key # 2 A#	"			●		
"	NX 50 00 30	— do —	Key # 3 B	"			●		
"	NX 50 00 40	— do. —	Key # 4 C	"			●		
"	NX 50 00 50	— do. —	Key # 5 C#	"			●		
"	NX 50 00 60	— do. —	Key # 6 D	"			●		
"	NX 50 00 70	— do. —	Key # 7 D#	"			●		
"	NX 50 00 80	— do. —	Key # 8 E	"			●		
"	NX 50 00 90	— do. —	Key # 9 F	"			●		
"	NX 50 01 00	— do. —	Key # 10 F#	"			●		
"	NX 50 01 10	— do. —	Key # 11 G	"			●		
"	NX 50 01 20	— do. —	Key # 12 G#	"			●		
"	NX 50 01 30	— do. —	Key # 13 A	"			●		
"	NX 50 01 40	— do. —	Key # 14 A#	"			●		
"	NX 50 01 50	— do. —	Key # 15 B	"			●		
"	NX 50 01 60	— do. —	Key # 16 C	"			●		
"	NX 50 01 70	— do. —	Key # 17 C#	"			●		
"	NX 50 01 80	— do. —	Key # 18 D	"			●		
"	NX 50 01 90	— do. —	Key # 19 D#	"			●		
"	NX 50 02 00	— do. —	Key # 20 E	"			●		
"	NX 50 02 10	— do. —	Key # 21 F	"			●		
"	NX 50 02 20	— do. —	Key # 22 F#	"			●		
"	NX 50 02 30	— do. —	Key # 23 G	"			●		
"	NX 50 02 40	— do. —	Key # 24 G#	"			●		
"	NX 50 02 50	— do. —	Key # 25 A	"			●		
"	NX 50 02 60	— do. —	Key # 26 A#	"			●		
"	NX 50 02 70	— do. —	Key # 27 B	"			●		
"	NX 50 02 80	— do. —	Key # 28 C	"			●		
"	NX 50 02 90	— do. —	Key # 29 C#	"			●		
"	NX 50 03 00	— do. —	Key # 30 D	"			●		
"	NX 50 03 10	— do. —	Key # 31 D#	"			●		
"	NX 50 03 20	— do. —	Key # 32 E	"			●		

Ref. No.	Part No.	Description		部 品 名	CP-70	CP-70B	CP-80		
7	NX 50 03 30	Key Assy	Key # 33 F	鍵 盤 Ass'y			●		
"	NX 50 03 40	– do. –	Key # 34 F#	"			●		
"	NX 50 03 50	– do. –	Key # 35 G	"			●		
"	NX 50 03 60	– do. –	Key # 36 G#	"			●		
"	NX 50 03 70	– do. –	Key # 37 A	"			●		
"	NX 50 03 80	– do. –	Key # 38 A#	"			●		
"	NX 50 03 90	– do. –	Key # 39 B	"			●		
"	NX 50 04 00	– do. –	Key # 40 C	"			●		
"	NX 50 04 10	– do. –	Key # 41 C#	"			●		
"	NX 50 04 20	– do. –	Key # 42 D	"			●		
"	NX 50 04 30	– do. –	Key # 43 D#	"			●		
"	NX 50 04 40	– do. –	Key # 44 E	"			●		
"	NX 50 04 50	– do. –	Key # 45 F	"			●		
"	NX 50 04 60	– do. –	Key # 46 F#	"			●		
"	NX 50 04 70	– do. –	Key # 47 G	"			●		
"	NX 50 04 80	– do. –	Key # 48 G#	"			●		
"	NX 50 04 90	– do. –	Key # 49 A	"			●		
"	NX 50 05 00	– do. –	Key # 50 A#	"			●		
"	NX 50 05 10	– do. –	Key # 51 B	"			●		
"	NX 50 05 20	– do. –	Key # 52 C	"			●		
"	NX 50 05 30	– do. –	Key # 53 C#	"			●		
"	NX 50 05 40	– do. –	Key # 54 D	"			●		
"	NX 50 05 50	– do. –	Key # 55 D#	"			●		
"	NX 50 05 60	– do. –	Key # 56 E	"			●		
"	NX 50 05 70	– do. –	Key # 57 F	"			●		
"	NX 50 05 80	– do. –	Key # 58 F#	"			●		
"	NX 50 05 90	– do. –	Key # 59 G	"			●		
"	NX 50 06 00	– do. –	Key # 60 G#	"			●		
"	NX 50 06 10	– do. –	Key # 61 A	"			●		
"	NX 50 06 20	– do. –	Key # 62 A#	"			●		
"	NX 50 06 30	– do. –	Key # 63 B	"			●		
"	NX 50 06 40	– do. –	Key # 64 C	"			●		
"	NX 50 06 50	– do. –	Key # 65 C#	"			●		
"	NX 50 06 60	– do. –	Key # 66 D	"			●		
"	NX 50 06 70	– do. –	Key # 67 D#	"			●		
"	NX 50 06 80	– do. –	Key # 68 E	"			●		
"	NX 50 06 90	– do. –	Key # 69 F	"			●		
"	NX 50 07 00	– do. –	Key # 70 F#	"			●		
"	NX 50 07 10	– do. –	Key # 71 G	"			●		
"	NX 50 07 20	– do. –	Key # 72 G#	"			●		
"	NX 50 07 30	– do. –	Key # 73 A	"			●		
"	NX 50 07 40	– do. –	Key # 74 A#	"			●		
"	NX 50 07 50	– do. –	Key # 75 B	"			●		
"	NX 50 07 60	– do. –	Key # 76 C	"			●		
"	NX 50 07 70	– do. –	Key # 77 C#	"			●		
"	NX 50 07 80	– do. –	Key # 78 D	"			●		
"	NX 50 07 90	– do. –	Key # 79 D#	"			●		
"	NX 50 08 00	– do. –	Key # 80 E	"			●		
"	NX 50 08 10	– do. –	Key # 81 F	"			●		
"	NX 50 08 20	– do. –	Key # 82 F#	"			●		
"	NX 50 08 30	– do. –	Key # 83 G	"			●		
"	NX 50 08 40	– do. –	Key # 84 G#	"			●		
"	NX 50 08 50	– do. –	Key # 85 A	"			●		
"	NX 50 08 60	– do. –	Key # 86 A#	"			●		
"	NX 50 08 70	– do. –	Key # 87 B	"			●		
"	NX 50 08 80	– do. –	Key # 88 C	"			●		

12. Frame Section（フレーム部品）

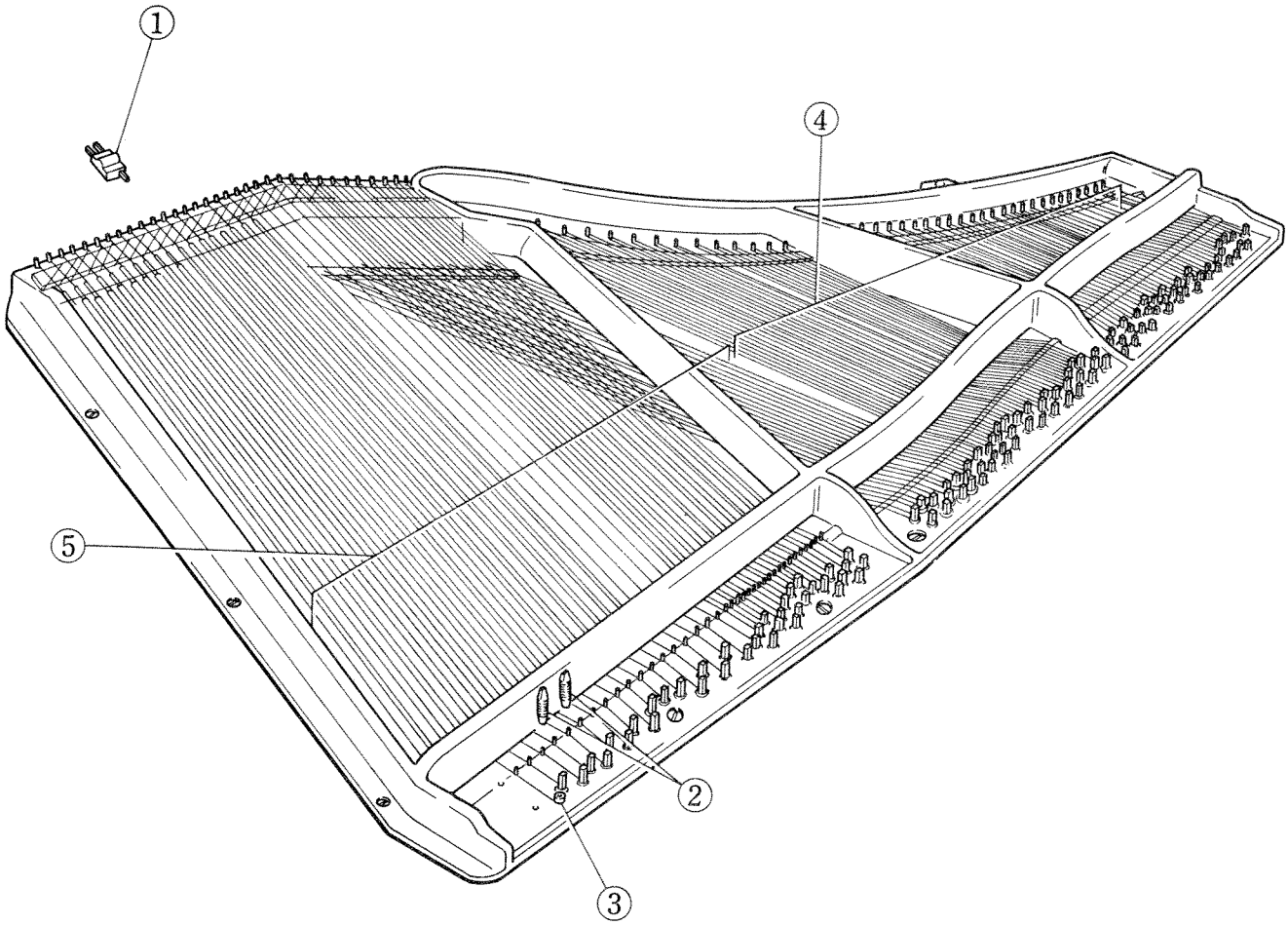

Ref. No.	Part No.	Description		部品名	CP-70	CP-70B	CP-80		
1	BD 50 00 20	Piezoelectric Pickup		ピックアップユニット		●	●		
"	BD 50 05 10	— do. —	➡ BD50000 20	〃	●				
2	AA 50 17 50	Tuning Pin	#3 φ7.10	チューニングピン	●	●	●		
"	AA 50 17 60	— do. —	#4 φ7.15	〃	●	●	●		
"	AA 50 19 00	— do. —	#5 φ7.20	〃	●	●	●		
"	AA 50 18 10	— do. —	#6 φ7.25	〃	●	●	●		
3	DB 50 00 60	Tuning Pin Bushing	#1 6.0 m/m	チューニングピンブッシュ	●	●	●		
"	DB 50 00 70	— do. —	#2 6.5	〃	●	●	●		
"	DB 50 00 80	— do. —	#3 7.0	〃	●	●	●		
"	DB 50 00 90	— do. —	#4 7.5	〃	●	●	●		
"	DB 50 01 00	— do. —	#5 8.0	〃	●	●	●		
"	DB 50 01 10	— do. —	#6 8.5	〃	●	●	●		
"	DB 50 01 20	— do. —	#7 9.0	〃	●	●	●		
4	MV 00 00 30	Music Wire #18	CP-80 43K	芯線			●		
"	MV 00 00 40	— do. — #17	CP-70, 70B 38K ~ 44K	44K ~ 51K	〃	●	●	●	
"	MV 00 00 50	— do. — #16 1/2	45K ~ 50K	52K ~ 57K	〃	●	●	●	
"	MV 00 00 60	— do. — #16	51K ~ 56K	58K ~ 63K	〃	●	●	●	
"	MV 00 00 70	— do. — #15 1/2	57K ~ 64K	64K ~ 71K	〃	●	●	●	
"	MV 00 00 80	— do. — #15	65K ~ 69K	72K ~ 76K	〃	●	●	●	
"	MV 00 00 90	— do. — #14 1/2		77K ~ 80K	〃			●	
"	MV 00 01 00	— do. — #14	70K ~ 73K	81K ~ 84K	〃	●	●	●	
"	MV 00 01 10	— do. — #13 1/2		85K ~ 88K	〃			●	
5	NB 50 08 80	Bass String	Complete Set		巻線 1台分	●			
"	NX 50 28 90	— do. —	— do. —		〃		●		
"	NX 50 29 00	— do. —	— do. —		〃			●	
"	NB 50 08 90	— do. —	Key # 1 E		巻線	●			
"	NB 50 09 00	— do. —	Key # 2 F		〃	●			
"	NB 50 09 10	— do. —	Key # 3 $F^{\#}$		〃	●			
"	NB 50 09 20	— do. —	Key # 4 G		〃	●			
"	NB 50 09 30	— do. —	Key # 5 $G^{\#}$		〃	●			
"	NB 50 09 40	— do. —	Key # 6 A		〃	●			
"	NB 50 09 50	— do. —	Key # 7 $A^{\#}$		〃	●			
"	NB 50 09 60	— do. —	Key # 8 B		〃	●			
"	NB 50 09 70	— do. —	Key # 9 C		〃	●			
"	NB 50 09 80	— do. —	Key # 10 $C^{\#}$		〃	●			
"	NB 50 09 90	— do. —	Key # 11 D		〃	●			
"	NB 50 10 00	— do. —	Key # 12 $D^{\#}$		〃	●			
"	NB 50 10 10	— do. —	Key # 13 E		〃	●			
"	NB 50 10 20	— do. —	Key # 14 F		〃	●			
"	NB 50 10 30	— do. —	Key # 15 $F^{\#}$		〃	●			
"	NB 50 10 40	— do. —	Key #16 G (Left)		〃	●			
"	NB 50 10 50	— do. —	Key #16 G (Right)		〃	●			
"	NB 50 10 60	— do. —	Key #17 $G^{\#}$ (Left)		〃	●			
"	NB 50 10 70	— do. —	Key #17 $G^{\#}$ (Right)		〃	●			
"	NB 50 10 80	— do. —	Key #18 A (Left)		〃	●			
"	NB 50 10 90	— do. —	Key #18 A (Right)		〃	●			
"	NB 50 11 00	— do. —	Key #19 $A^{\#}$ (Left)		〃	●			
"	NB 50 11 10	— do. —	Key #19 $A^{\#}$ (Right)		〃	●			
"	NB 50 11 20	— do. —	Key #20 B (Left)		〃	●			
"	NB 50 11 30	— do. —	Key #20 B (Right)		〃	●			
"	NB 50 11 40	— do. —	Key #21 C (Left)		〃	●			
"	NB 50 11 50	— do. —	Key #21 C (Right)		〃	●			
"	NB 50 11 60	— do. —	Key #22 $C^{\#}$ (Left)		〃	●			
"	NB 50 11 70	— do. —	Key #22 $C^{\#}$ (Right)		〃	●			
"	NB 50 11 80	— do. —	Key #23 D (Left)		〃	●			

Ref. No.	Part No.	Description	部品名	CP-70	CP-70B	CP-80		
5	NB 50 11 90	Bass String	Key #23 D (Right) 巻線	●				
〃	NB 50 12 00	— do. —	Key #24 D# (Left) 〃	●				
〃	NB 50 12 10	— do. —	Key #24 D# (Right) 〃	●				
〃	NB 50 12 20	— do. —	Key #25 E (Left) 〃	●				
〃	NB 50 12 30	— do. —	Key #25 E (Right) 〃	●				
〃	NB 50 12 40	— do. —	Key #26 F (Left) 〃	●				
〃	NB 50 12 50	— do. —	Key #26 F (Right) 〃	●				
〃	NB 50 12 60	— do. —	Key #27 F# (Left) 〃	●				
〃	NB 50 12 70	— do. —	Key #27 F# (Right) 〃	●				
〃	NB 50 12 80	— do. —	Key #28 G (Left) 〃	●				
〃	NB 50 12 90	— do. —	Key #28 G (Right) 〃	●				
〃	NB 50 13 00	— do. —	Key #29 G# (Left) 〃	●				
〃	NB 50 13 10	— do. —	Key #29 G# (Right) 〃	●				
〃	NB 50 13 20	— do. —	Key #30 A (Left) 〃	●				
〃	NB 50 13 30	— do. —	Key #30 A (Right) 〃	●				
〃	NB 50 13 40	— do. —	Key #31 A# (Left) 〃	●				
〃	NB 50 13 50	— do. —	Key #31 A# (Right) 〃	●				
〃	NB 50 13 60	— do. —	Key #32 B (Left) 〃	●				
〃	NB 50 13 70	— do. —	Key #32 B (Right) 〃	●				
〃	NB 50 13 80	— do. —	Key #33 C (Left) 〃	●				
〃	NB 50 13 90	— do. —	Key #33 C (Right) 〃	●				
〃	NB 50 14 00	— do. —	Key #34 C# (Left) 〃	●				
〃	NB 50 14 10	— do. —	Key #34 C# (Right) 〃	●				
〃	NB 50 14 20	— do. —	Key #35 D (Left) 〃	●				
〃	NB 50 14 30	— do. —	Key #35 D (Right) 〃	●				
〃	NB 50 14 40	— do. —	Key #36 D# (Left) 〃	●				
〃	NB 50 14 50	— do. —	Key #36 D# (Right) 〃	●				
〃	NB 50 14 60	— do. —	Key #37 E (Left) 〃	●				
〃	NB 50 14 70	— do. —	Key #37 E (Right) 〃	●				
〃	NB 50 40 30	— do. —	Key # 1 E 〃		●			
〃	NB 50 40 40	— do. —	Key # 2 F 〃		●			
〃	NB 50 40 50	— do. —	Key # 3 F# 〃		●			
〃	NB 50 40 60	— do. —	Key # 4 G 〃		●			
〃	NB 50 40 70	— do. —	Key # 5 G# 〃		●			
〃	NB 50 40 80	— do. —	Key # 6 A 〃		●			
〃	NB 50 40 90	— do. —	Key # 7 A# 〃		●			
〃	NB 50 41 00	— do. —	Key # 8 B 〃		●			
〃	NB 50 41 10	— do. —	Key # 9 C 〃		●			
〃	NB 50 41 20	— do. —	Key #10 C# 〃		●			
〃	NB 50 41 30	— do. —	Key #11 D 〃		●			
〃	NB 50 41 40	— do. —	Key #12 D# 〃		●			
〃	NB 50 41 50	— do. —	Key #13 E 〃		●			
〃	NB 50 41 60	— do. —	Key #14 F 〃		●			
〃	NB 50 41 70	— do. —	Key #15 F# 〃		●			
〃	NB 50 41 80	— do. —	Key #16 G (Left) 〃		●			
〃	NB 50 41 90	— do. —	Key #16 G (Right) 〃		●			
〃	NB 50 42 00	— do. —	Key #17 G# (Left) 〃		●			
〃	NB 50 42 10	— do. —	Key #17 G# (Right) 〃		●			
〃	NB 50 42 20	— do. —	Key #18 A (Left) 〃		●			
〃	NB 50 42 30	— do. —	Key #18 A (Right) 〃		●			
〃	NB 50 42 40	— do. —	Key #19 A# (Left) 〃		●			
〃	NB 50 42 50	— do. —	Key #19 A# (Right) 〃		●			
〃	NB 50 42 60	— do. —	Key #20 B (Left) 〃		●			

Ref. No.	Part No.	Description		部品名	CP-70	CP-70B	CP-80		
5	NB 50 42 70	Bass String	Key #20 B (Right)	巻線		●			
"	NB 50 42 80	— do. —	Key #21 C (Left)	"		●			
"	NB 50 42 90	— do. —	Key #21 C (Right)	"		●			
"	NB 50 43 00	— do. —	Key #22 C# (Left)	"		●			
"	NB 50 43 10	— do. —	Key #22 C# (Right)	"		●			
"	NB 50 43 20	— do. —	Key #23 D (Left)	"		●			
"	NB 50 43 30	— do. —	Key #23 D (Right)	"		●			
"	NB 50 43 40	— do. —	Key #24 D# (Left)	"		●			
"	NB 50 43 50	— do. —	Key #24 D# (Right)	"		●			
"	NB 50 43 60	— do. —	Key #25 E (Left)	"		●			
"	NB 50 43 70	— do. —	Key #25 E (Right)	"		●			
"	NB 50 43 80	— do. —	Key #26 F (Left)	"		●			
"	NB 50 43 90	— do. —	Key #26 F (Right)	"		●			
"	NB 50 44 00	— do. —	Key #27 F# (Left)	"		●			
"	NB 50 44 10	— do. —	Key #27 F# (Right)	"		●			
"	NB 50 44 20	— do. —	Key #28 G (Left)	"		●			
"	NB 50 44 30	— do. —	Key #28 G (Right)	"		●			
"	NB 50 44 40	— do. —	Key #29 G# (Left)	"		●			
"	NB 50 44 50	— do. —	Key #29 G# (Right)	"		●			
"	NB 50 44 60	— do. —	Key #30 A (Left)	"		●			
"	NB 50 44 70	— do. —	Key #30 A (Right)	"		●			
"	NB 50 44 80	— do. —	Key #31 A# (Left)	"		●			
"	NB 50 44 90	— do. —	Key #31 A# (Right)	"		●			
"	NB 50 45 00	— do. —	Key #32 B (Left)	"		●			
"	NB 50 45 10	— do. —	Key #32 B (Right)	"		●			
"	NB 50 45 20	— do. —	Key #33 C (Left)	"		●			
"	NB 50 45 30	— do. —	Key #33 C (Right)	"		●			
"	NB 50 45 40	— do. —	Key #34 C# (Left)	"		●			
"	NB 50 45 50	— do. —	Key #34 C# (Right)	"		●			
"	NB 50 45 60	— do. —	Key #35 D (Left)	"		●			
"	NB 50 45 70	— do. —	Key #35 D (Right)	"		●			
"	NB 50 45 80	— do. —	Key #36 D# (Left)	"		●			
"	NB 50 45 90	— do. —	Key #36 D# (Right)	"		●			
"	NB 50 46 00	— do. —	Key #37 E (Left)	"		●			
"	NB 50 46 10	— do. —	Key #37 E (Right)	"		●			
"	NB 50 47 20	— do. —	Key #1 A	"			●		
"	NB 50 47 30	— do. —	Key #2 A#	"			●		
"	NB 50 47 40	— do. —	Key #3 B	"			●		
"	NB 50 47 50	— do. —	Key #4 C	"			●		
"	NB 50 47 60	— do. —	Key #5 C#	"			●		
"	NB 50 47 70	— do. —	Key #6 D	"			●		
"	NB 50 47 80	— do. —	Key #7 D#	"			●		
"	NB 50 47 90	— do. —	Key #8 E	"			●		
"	NB 50 48 00	— do. —	Key #9 F	"			●		
"	NB 50 48 10	— do. —	Key #10 F#	"			●		
"	NB 50 48 20	— do. —	Key #11 G	"			●		
"	NB 50 48 30	— do. —	Key #12 G#	"			●		
"	NB 50 48 40	— do. —	Key #13 A	"			●		
"	NB 50 48 50	— do. —	Key #14 A#	"			●		
"	NB 50 48 60	— do. —	Key #15 B	"			●		
"	NB 50 48 70	— do. —	Key #16 C	"			●		
"	NB 50 48 80	— do. —	Key #17 C#	"			●		
"	NB 50 48 90	— do. —	Key #18 D	"			●		

Ref. No.	Part No.	Description		部 品 名	CP-70	CP-70B	CP-80		
5	NB 50 49 00	Bass String	Key #19 $D^{\#}$	〃			●		
〃	NB 50 49 10	– do. –	Key #20 E	〃			●		
〃	NB 50 49 20	– do. –	Key #21 F	〃			●		
〃	NB 50 49 30	– do. –	Key #22 $F^{\#}$	〃			●		
〃	NB 50 49 40	– do. –	Key #23 G (Left)	〃			●		
〃	NB 50 49 50	– do. –	Key #23 G (Right)	〃			●		
〃	NB 50 49 60	– do. –	Key #24 $G^{\#}$ (Left)	〃			●		
〃	NB 50 49 70	– do. –	Key #24 $G^{\#}$ (Right)	〃			●		
〃	NB 50 49 80	– do. –	Key #25 A (Left)	〃			●		
〃	NB 50 49 90	– do. –	Key #25 A (Right)	〃			●		
〃	NB 50 50 00	– do. –	Key #26 $A^{\#}$ (Left)	〃			●		
〃	NB 50 50 10	– do. –	Key #26 $A^{\#}$ (Right)	〃			●		
〃	NB 50 50 20	– do. –	Key #27 B (Left)	〃			●		
〃	NB 50 50 30	– do. –	Key #27 B (Right)	〃			●		
〃	NB 50 50 40	– do. –	Key #28 C (Left)	〃			●		
〃	NB 50 50 50	– do. –	Key #28 C (Right)	〃			●		
〃	NB 50 50 60	– do. –	Key #29 $C^{\#}$ (Left)	〃			●		
〃	NB 50 50 70	– do. –	Key #29 $C^{\#}$ (Right)	〃			●		
〃	NB 50 50 80	– do. –	Key #30 D (Left)	〃			●		
〃	NB 50 50 90	– do. –	Key #30 D (Right)	〃			●		
〃	NB 50 51 00	– do. –	Key #31 $D^{\#}$ (Left)	〃			●		
〃	NB 50 51 10	– do. –	Key #31 $D^{\#}$ (Right)	〃			●		
〃	NB 50 51 20	– do. –	Key #32 E (Left)	〃			●		
〃	NB 50 51 30	– do. –	Key #32 E (Right)	〃			●		
〃	NB 50 51 40	– do. –	Key #33 F (Left)	〃			●		
〃	NB 50 51 50	– do. –	Key #33 F (Right)	〃			●		
〃	NB 50 51 60	– do. –	Key #34 $F^{\#}$ (Left)	〃			●		
〃	NB 50 51 70	– do. –	Key #34 $F^{\#}$ (Right)	〃			●		
〃	NB 50 51 80	– do. –	Key #35 G (Left)	〃			●		
〃	NB 50 51 90	– do. –	Key #35 G (Right)	〃			●		
〃	NB 50 52 00	– do. –	Key #36 $G^{\#}$ (Left)	〃			●		
〃	NB 50 52 10	– do. –	Key #36 $G^{\#}$ (Right)	〃			●		
〃	NB 50 52 20	– do. –	Key #37 A (Left)	〃			●		
〃	NB 50 52 30	– do. –	Key #37 A (Right)	〃			●		
〃	NB 50 52 40	– do. –	Key #38 $A^{\#}$ (Left)	〃			●		
〃	NB 50 52 50	– do. –	Key #38 $A^{\#}$ (Right)	〃			●		
〃	NB 50 52 60	– do. –	Key #39 B (Left)	〃			●		
〃	NB 50 52 70	– do. –	Key #39 B (Right)	〃			●		
〃	NB 50 52 80	– do. –	Key #40 C (Left)	〃			●		
〃	NB 50 52 90	– do. –	Key #40 C (Right)	〃			●		
〃	NB 50 53 00	– do. –	Key #41 $C^{\#}$ (Left)	〃			●		
〃	NB 50 53 10	– do. –	Key #41 $C^{\#}$ (Right)	〃			●		
〃	NB 50 53 20	– do. –	Key #42 D (Left)	〃			●		
〃	NB 50 53 30	– do. –	Key #42 D (Right)	〃			●		

CP-70/70B/80 PARTS LIST

1982年4月　　初版発行

発行所：日本楽器製造株式会社
電音サービス課

印　刷：東海電子印刷株式会社