CONTENTS

Specifications 2
Coding Guide 3
Unit Layout 4
Setup & Disassembly Procedures 5
Printed Circuit Board, Circuit Board Diagram, Interconnection Diagram, Circuit Board Wiring
1. G7 Circuit Board Diagram, Interconnection Diagram 6
   G7 Circuit Board Drawing 7
2. G2 – G6 Circuit Board Diagram, Interconnection Diagram 8
   G2 – G6 Circuit Board Wiring 9
3. G1 Circuit Board Diagram, Interconnection Diagram 10
   G1 Circuit Board Wiring 11
4. D3 Circuit Board Diagram, Interconnection Diagram 12
   D3 Circuit Board Wiring 13
5. D2 Circuit Board Diagram, Interconnection Diagram 14
   D2 Circuit Board Drawing 15
6. D1Dircuit Board Diagram, Interconnection Diagram 16
   D1 Circuit Board Wiring 17
7. F Circuit Board Diagram, Interconnection Diagram 18
   F Circuit Board Wiring 19
8. A Circuit Board Diagram, Interconnection Diagram 20
   A Circuit Board Wiring 21
9. C1 Circuit Board Diagram, Interconnection Diagram 22
   C1 Circuit Board Wiring 23
10. C2 Circuit Board Diagram, Interconnection Diagram 24
    C2 Circuit Board Wiring 25
11. DC Circuit Board Diagram, Interconnection Diagram 26
    DC Circuit Board Wiring 27
12. T1,T2 Circuit Board Diagram, Interconnection Diagram 28
CP-30 Parts List

SPECIFICATIONS

1. KEYBOARD	76 KEYS ($E_1 \sim G_7$)		6 OCTAVES 1/4
2. TONE TABLETS	I ch	PIANO 1	II ch PIANO 1
		PIANO 2	PIANO 2
		PIANO 3	PIANO 3
		HARPSICHORD	HARPSICHORD
3. EFFECT TABLETS	TREMOLO I		TREMOLO II
4. EFFECT CONTROL	PITCH I		PITCH II
	DECAY I		DECAY II
	SPEED (TREMOLO)		INTENSITY (TREMOLO)
	BASS		TREBLE
	BALANCE		VOLUME
5. FOOT SWITCH JACKS	SUSTAIN		
	TREMOLO		
6. OUTPUT JACKS	I		
	II		
	I + II		
7. OTHERS	POWER SW		
	PILOT LAMP		
8. INTERGRATED CIRCUITS	YM252 7		
	YM253 7		
	CA3038 1		
	RC4558 2		
9. RATED VOLTAGE	AC 110V ~ 240V		
10. RATED FREQUENCY	50/60Hz		
11. RATED POWER CONSUMPTION	25W (Other models) 117V 0.4A (Canadian model)		
12. APPEARANCE AND FINISHING	PICK BOLT		
	ROSE TAP PLYWOOD + PVC LEATHER CLAD		
	WIDTH	1276 mm	
	DEPTH	641 mm	
	HEIGHT	790 mm (UNPACKED), 181 mm (PACKED)	
	WEIGHT	54 kg	

CODING GUIDE

1. Designation of Signal Systems in Circuits

Audio Signal

DC Control Voltage

Modulated Wave

Pulse

Mechanical Control

2. Printed Circuit Board

1. All figures of the circuit board pattern are viewed from the part side.
2. Part displaying marks on the figures of the circuit board patterns.

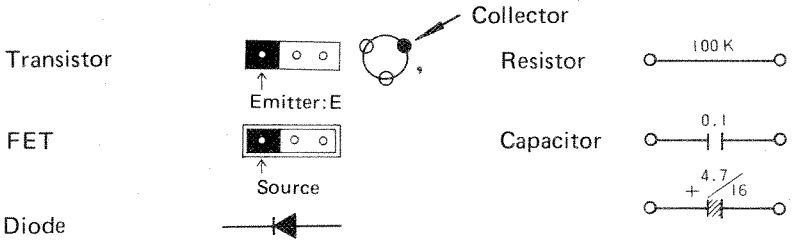

3. Designation of Wiring Materials

1. Color Designation (only English letters are shown in patterns)

BL (Black)	WH (White)
BR (Brown)	GG (Grass Green)
RE (Red)	SB (Sky Blue)
OR (Orange)	PK (Pink)
YE (Yellow)	TR(Transparent)
GR (Green)	J (Jumper)
BE (Blue)	
VI (Violet)	
GY (Gray)	

2. Designation of Wiring materials

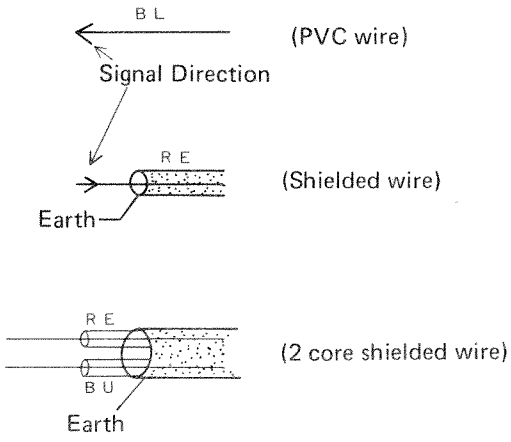

4. CP-30 consists of sound compassing E_1 – G_7 (76 keys) with A_4 = 440 (Hz).

UNIT LAYOUT

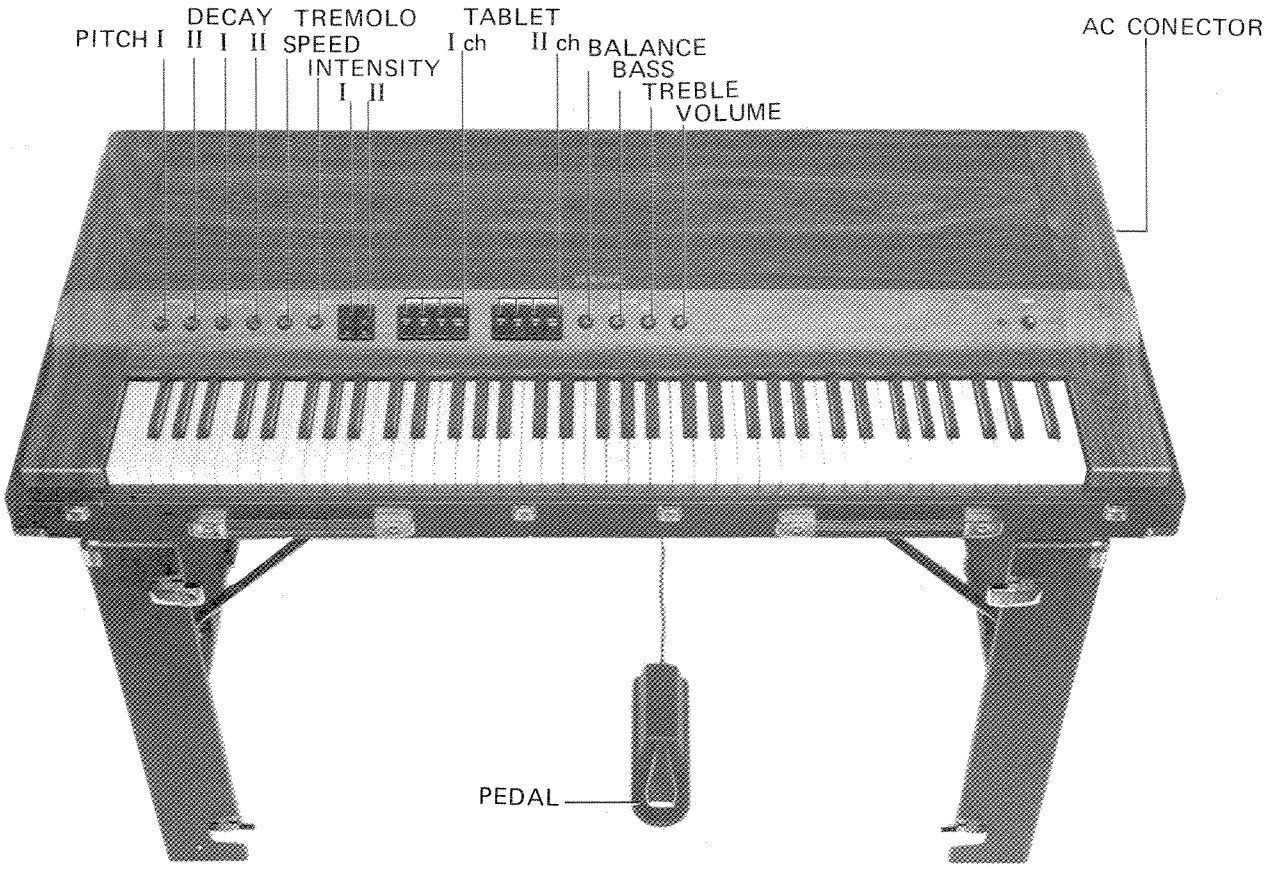
PITCH I
DECAY II
DECAY I
DECAY II
TREMOLO SPEED
TREMOLO INTENSITY I
TREMOLO INTENSITY II
TABLET I ch
TABLET II ch
BALANCE
BASS
TREBLE
VOLUME
AC CONECTOR
PEDAL

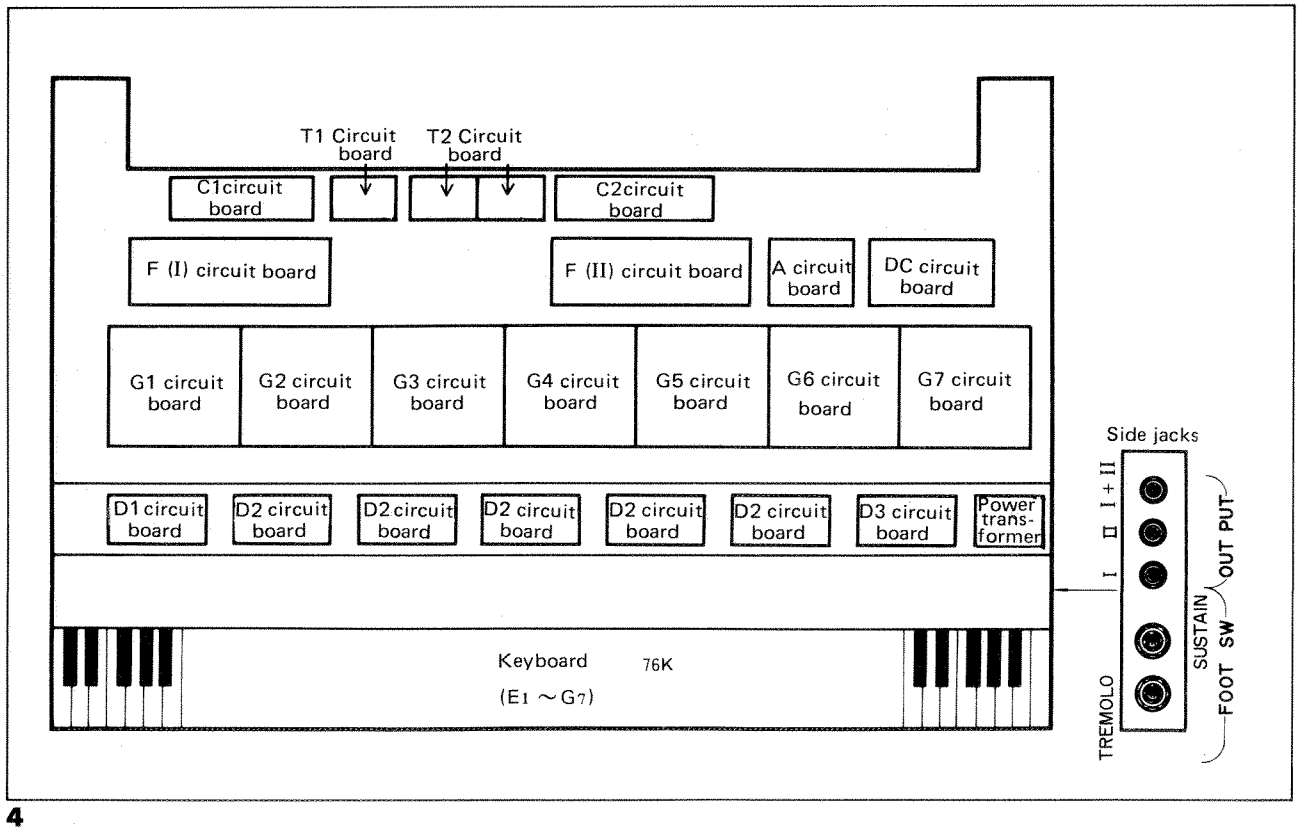
T1 Circuit board
T2 Circuit board
C1circuit board
C2circuit board
F (I) circuit board
F (II) circuit board
A circuit board
DC circuit board
G1 circuit board
G2 circuit board
G3 circuit board
G4 circuit board
G5 circuit board
G6 circuit board
G7 circuit board
D1 circuit board
D2 circuit board
D2 circuit board
D2 circuit board
D2 circuit board
D2 circuit board
D3 circuit board
Power trans-former
Keyboard 76K
(E1 ～G7)
Side jacks
I
II
I + II
TREMOLO
SUSTAIN
FOOT SW
OUT PUT

G1 Circuit Board & Wiring

G1

NA80222

1. Transistor
   Tr1 ~ 18 : 2SA844 (D) (E)
2. IC
   IC1 : YM253
   IC2 : YM252
3. Diode
   D1 ~ 54 : 1S1555

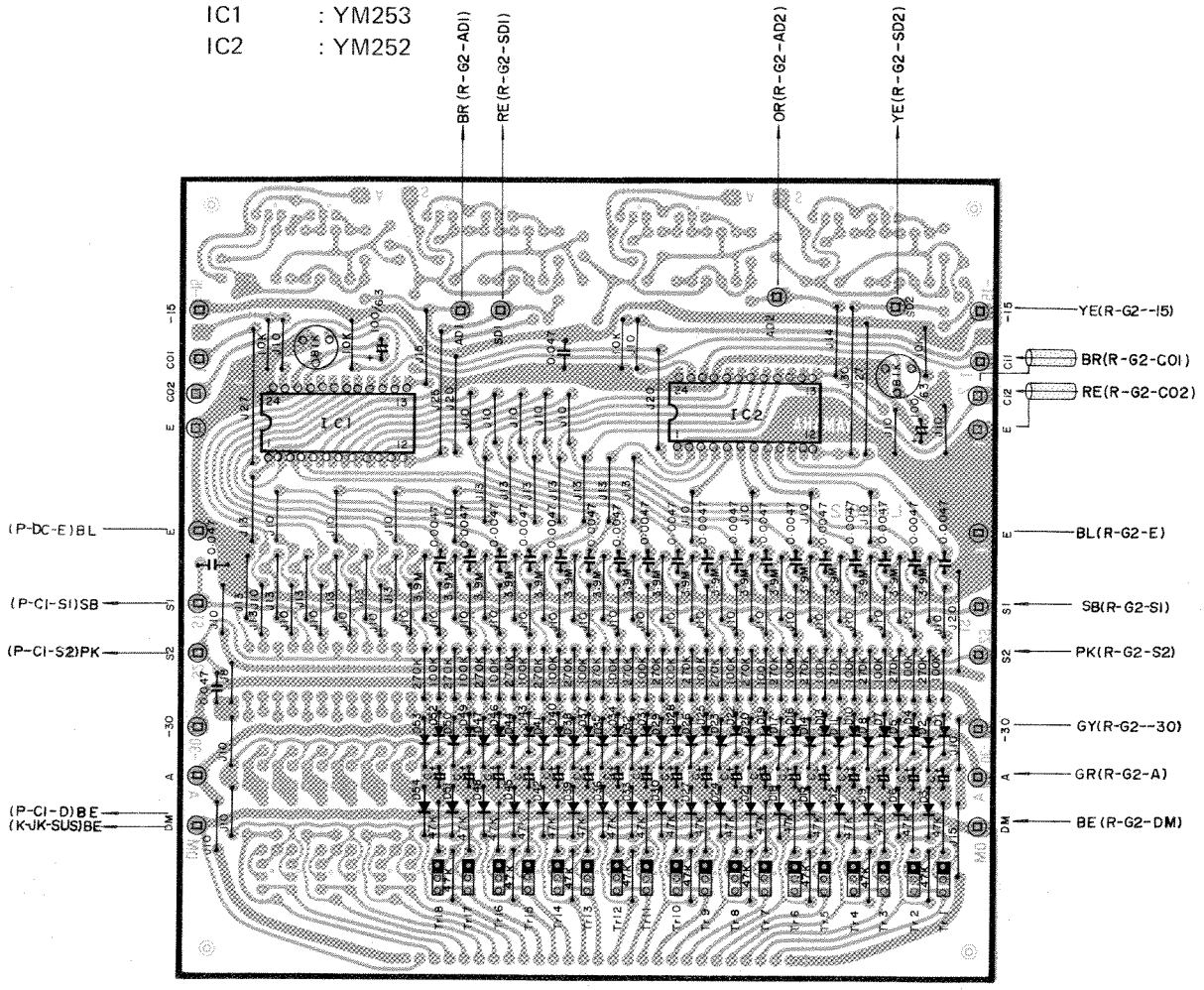

▼ Adjustment Locations

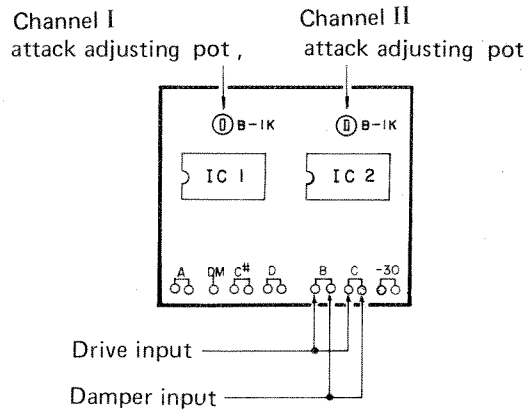

Attack adjusting pot is already adjusted before shipment, therefore do not touch it normally. However, if adjustment is needed because of IC replacement, etc., procede as follows;

1. Remove wires from output terminals (AD1, SD1, AD2 and SD2). Connect A 1KΩ load resistor from each output terminal to ground, respectively.
2. Apply −5VDC to the drive input (terminal i4) for note name E.
3. Measure the output waveform. Amplitude and waveshape should be as shown in the table below. Adjust respective B−1KΩ adjusting pot as necessary.

(Please recheck pattern of waveform)

Output Terminal	Waveform	Amplitude (P−P)
AD1		50 mV
SD1		130 mV
AD2		35 mV
SD2		130 mV

4. D3 Circuit

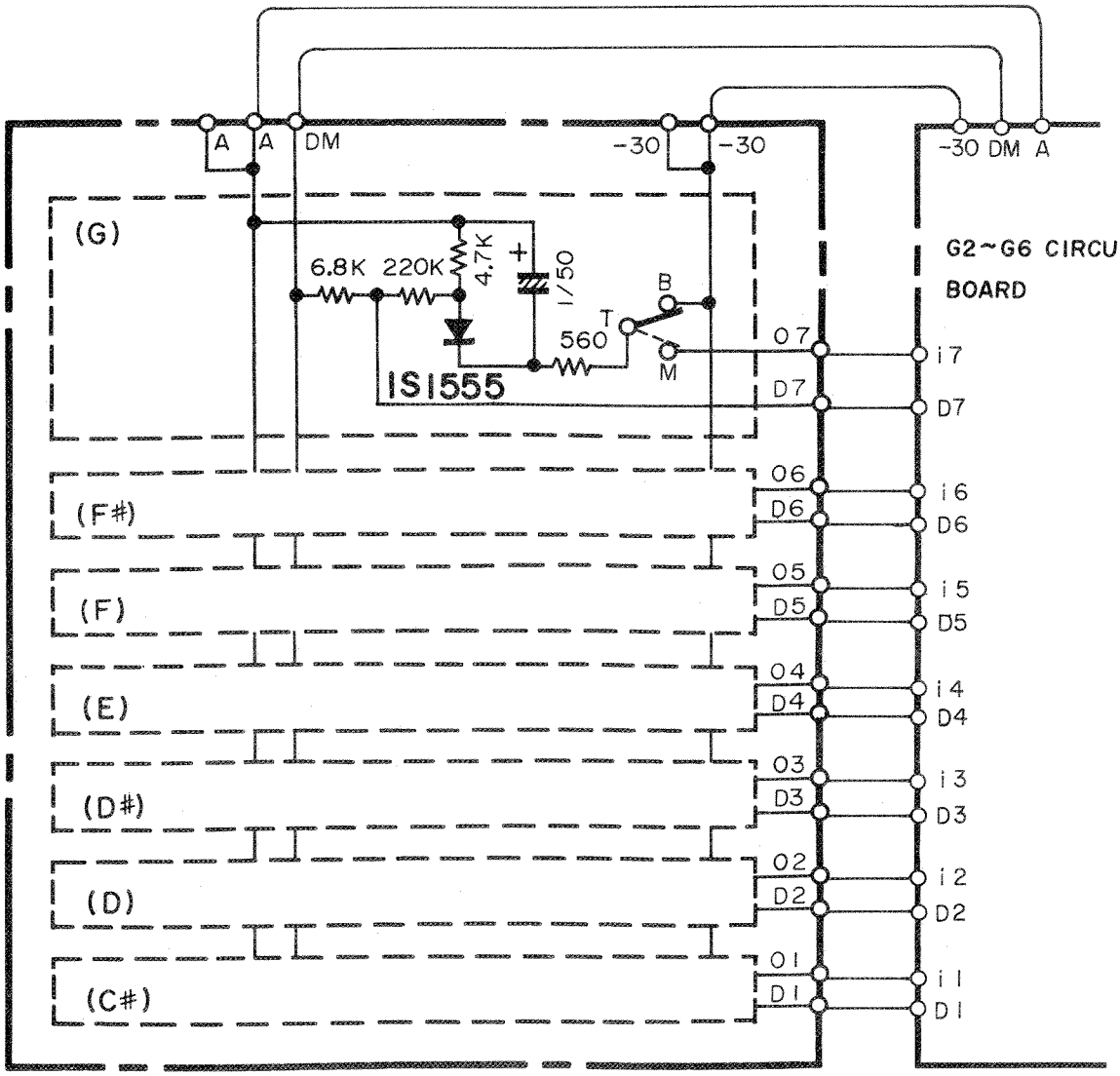

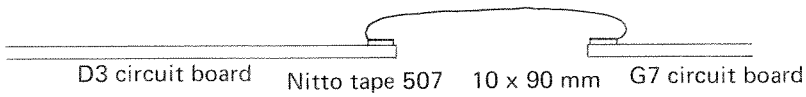

Note) Connection of D3 circuit board and G7 circuit board is, wired with jumper wire, and reinforced with two sided adhesive tape.

D3 Circuit Board & Wiring

D3

1. Diode
   D1～7 : 1S1555
2. Electrolytic capacitor
   1/50 (± 10%)
3. Key contacts, 7 keys

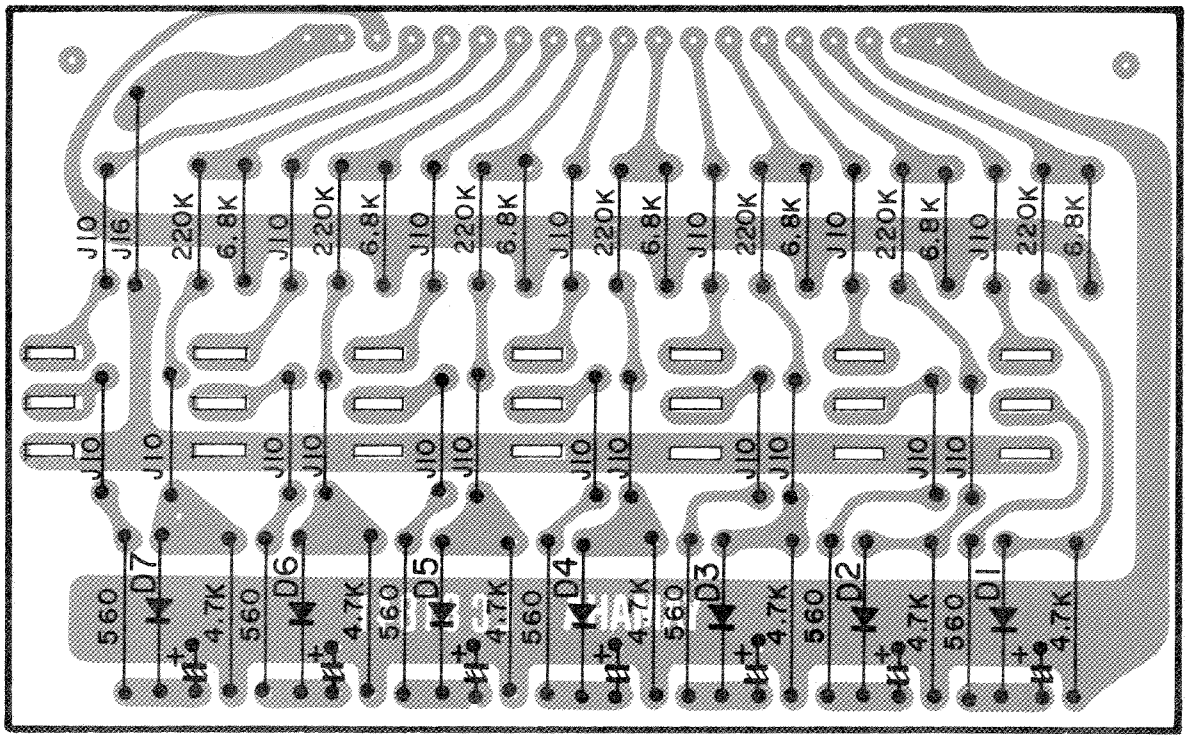

5. D2 Circuit

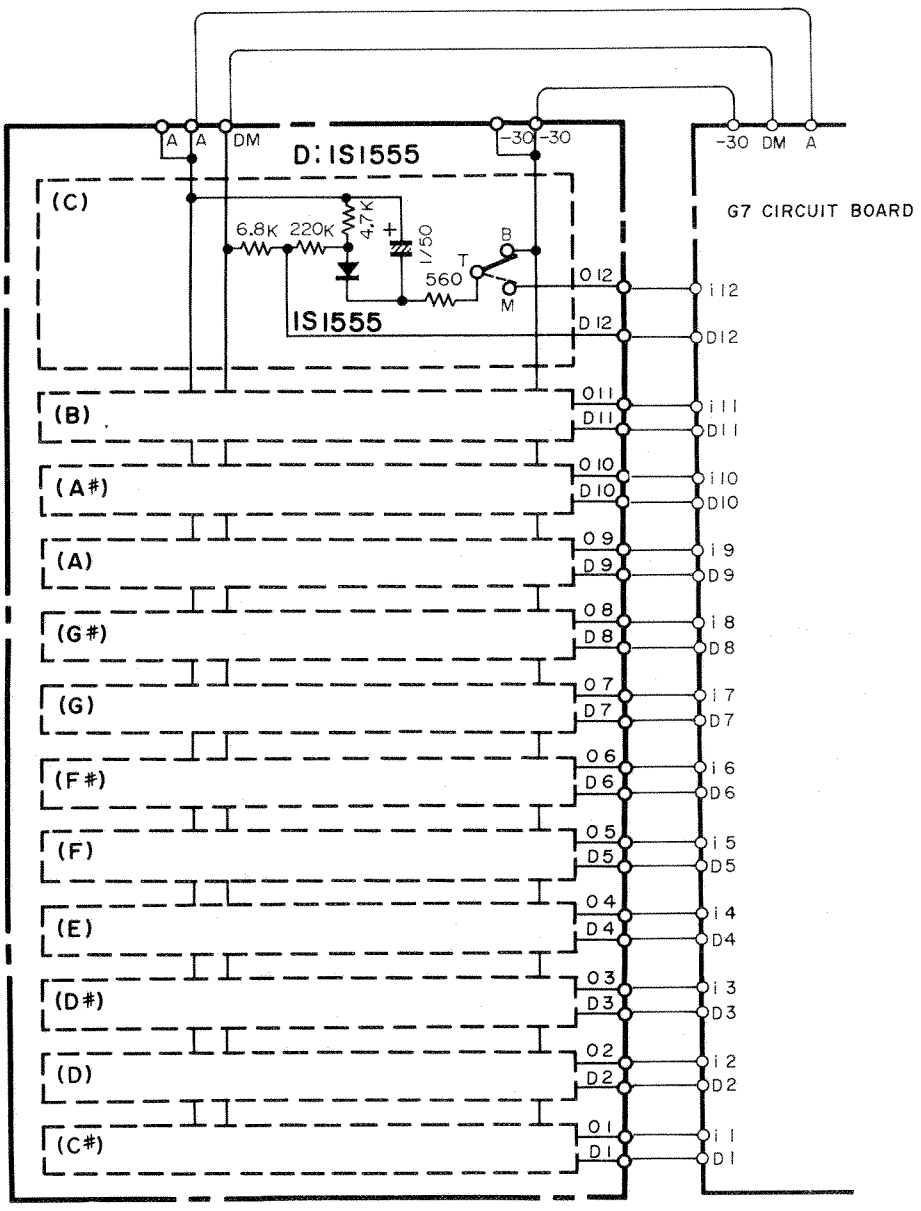

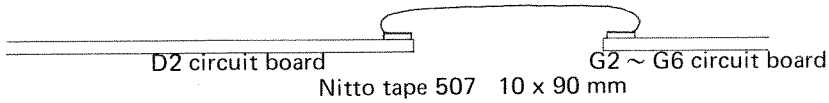

Nitto tape 507 10 x 90 mm

Note) D2 board is secured by both sides adhesive tape, after wiring is made with regard to each board of G2 – G6 (5 sheets) by jumper wire.
The five D2 boards are wired by jumper wire to boards G2 – G6 (5 sheets) and secured with two sided adhesive tape.

D2 Circuit Board & Wiring

D2

1. Diode
   D1～12 : 1S1555
2. Electrolytic capacitor
   1/50 (± 10%)
3. Key contacts, 12 keys

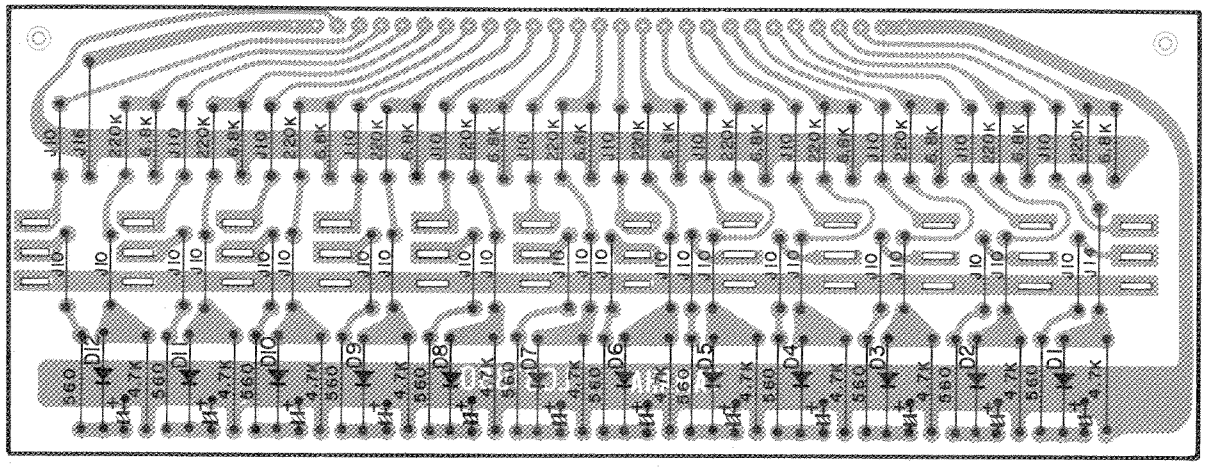

6. D1 Circuit

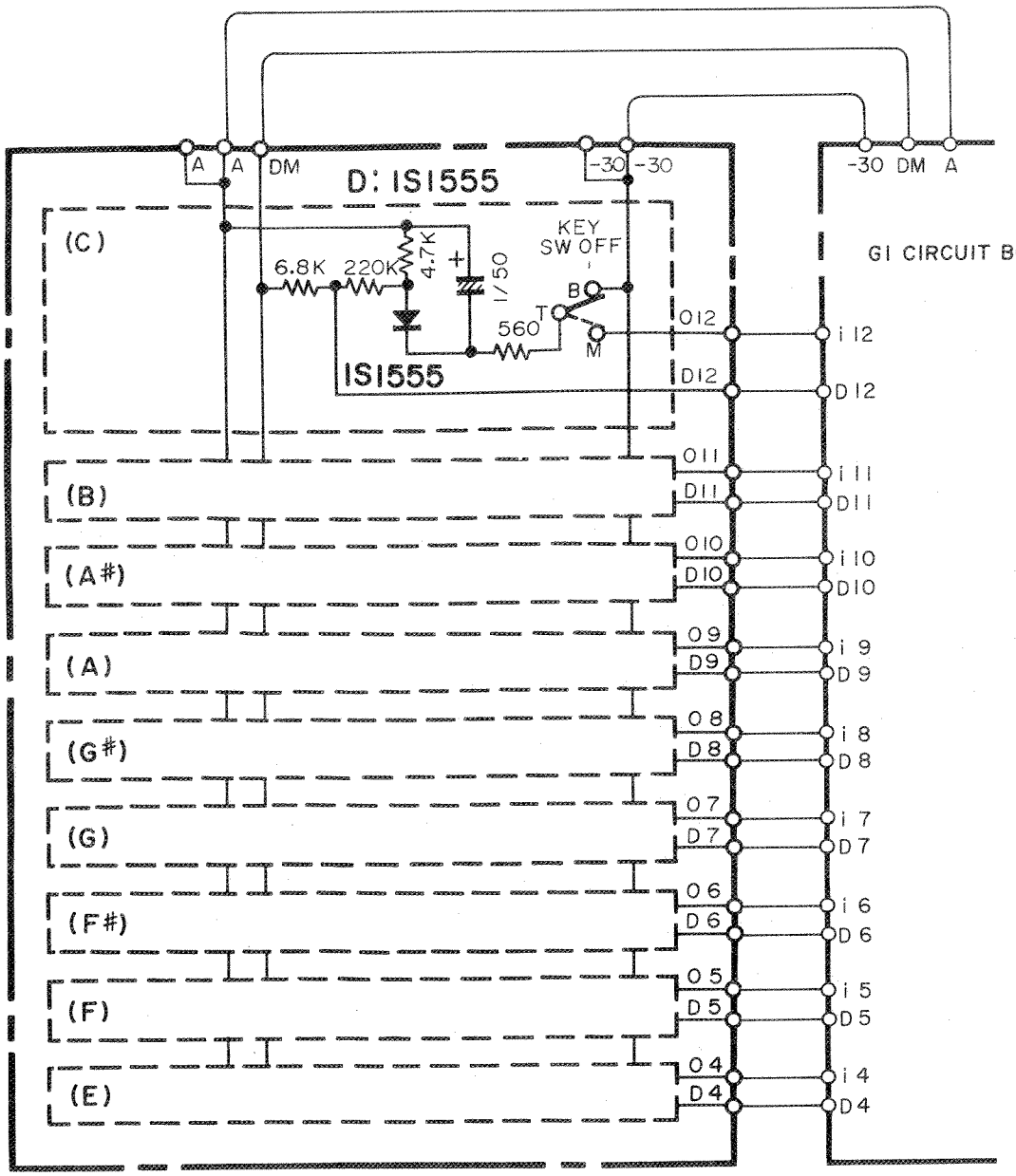



Note) Connection between D1 board and G1 board is secured with two sided adhesive tape, after being wired with jumper wire.

C2

C2 Circuit Board & Wiring

NA80216

1. Transistor
   Tr1, 3 : 2SA561 (O) (Y)
   Tr2, 4, 5, 6:2SC1681 (BL)
2. IC
   IC1, 2 : CA3080

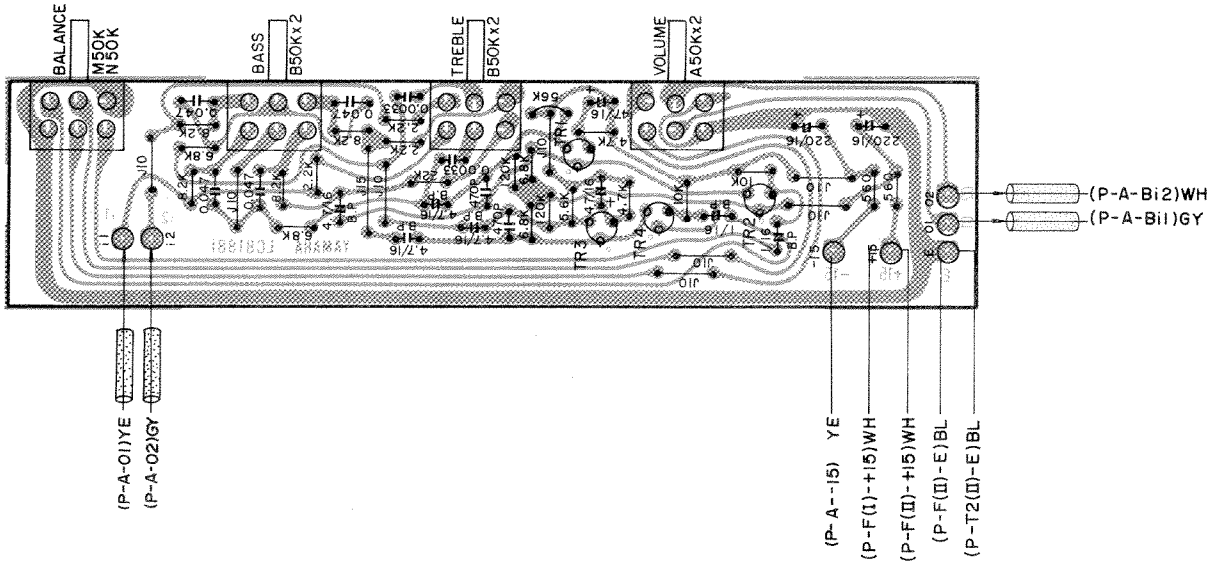

Horizontal component values on ckt board are upside down.

11. DC Circuit

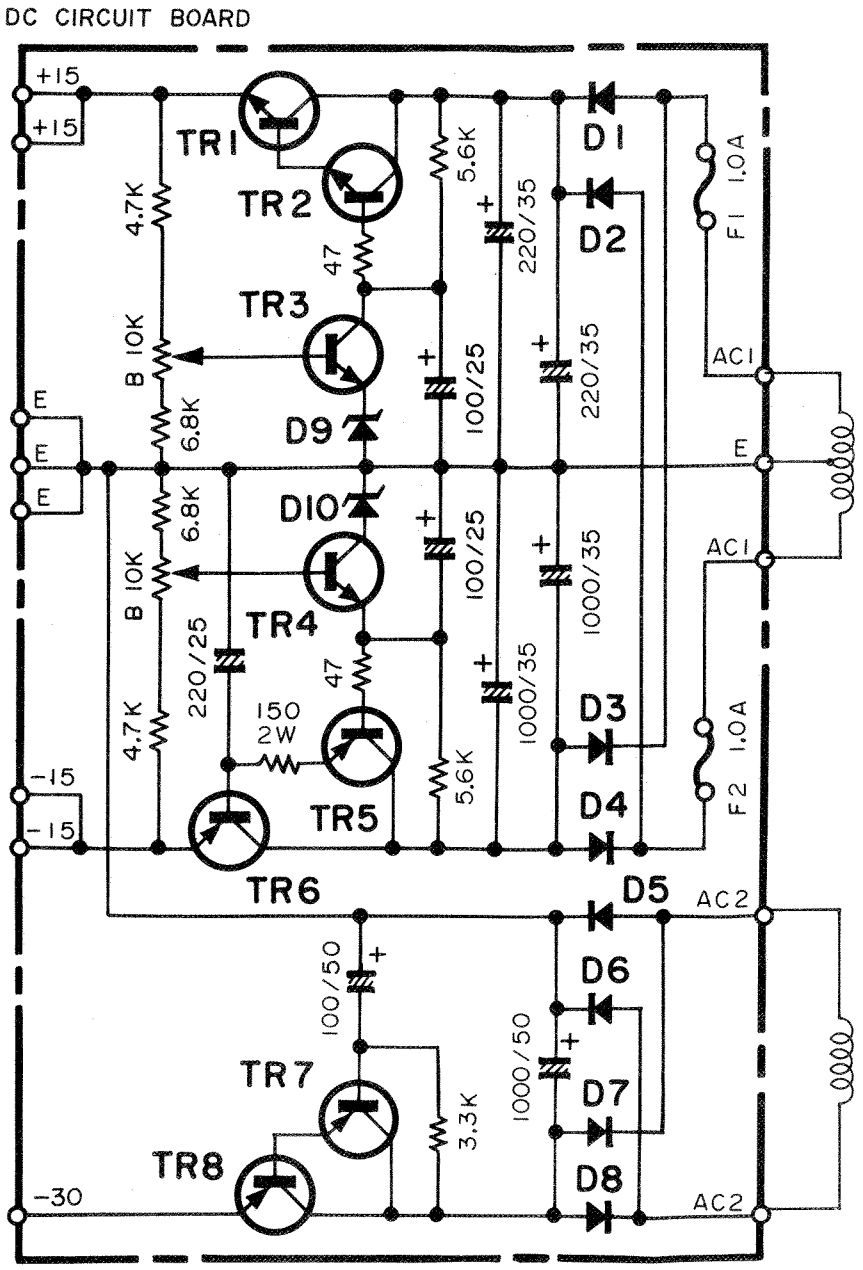

DC Circuit Board & Wiring

DC

1. Transistor
   Tr1 : 2SD526 (R)
   Tr2, 3 : 2SC1681 (BL)
   Tr4, 5 : 2SA561 (Y) (O)
   Tr6, 8 : 2SB596 (R)
   Tr7 : 2SA777 (R)

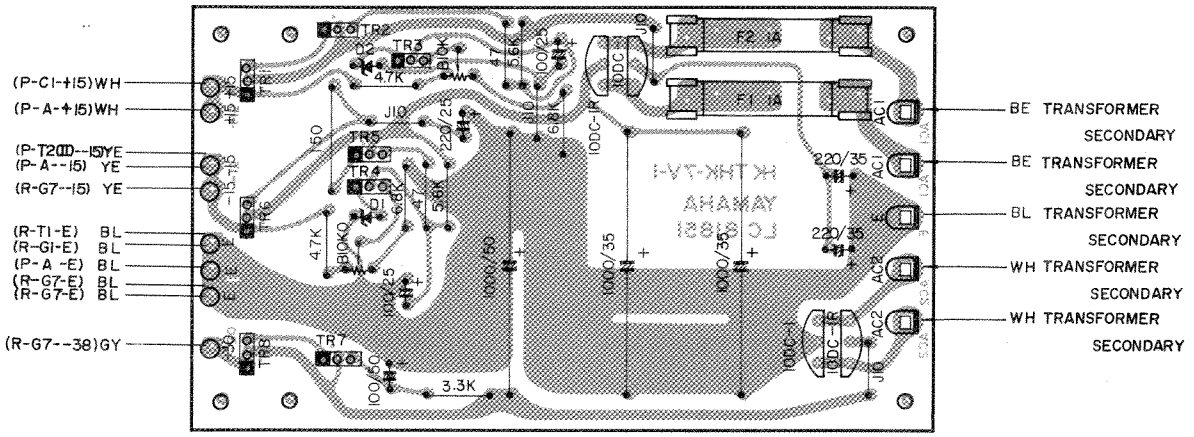

▼ Adjustment Locations

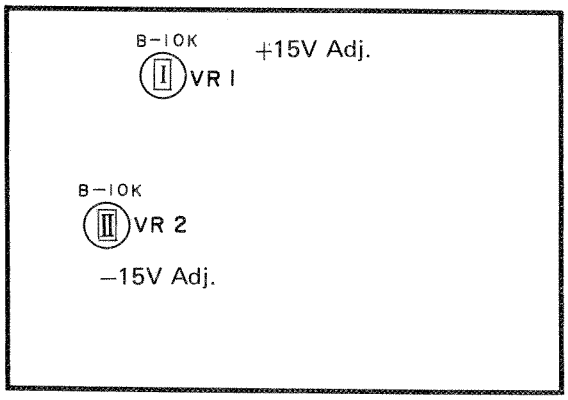

▼ Remarks

Kink leas or varnished tube is applied to diodes 10DC-1, 10DC-1R, so that diodes are floating by approx. 10 mm on the board.

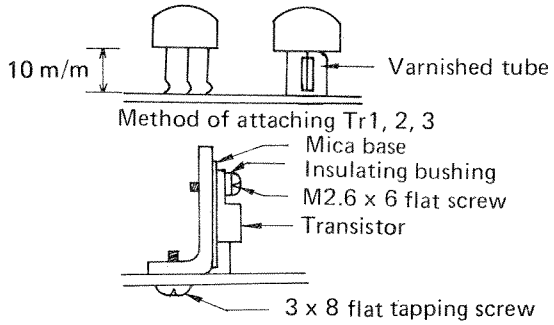

Silicon grease is applied between transistor, mica base and radiating plate, respectively.

All electrolytic capacitors are firmly attached.

* Use specifically accepted parts when replacing fuse and metal oxide film resistor.

12. T1, T2 Circuit, Circuit Board & Wiring

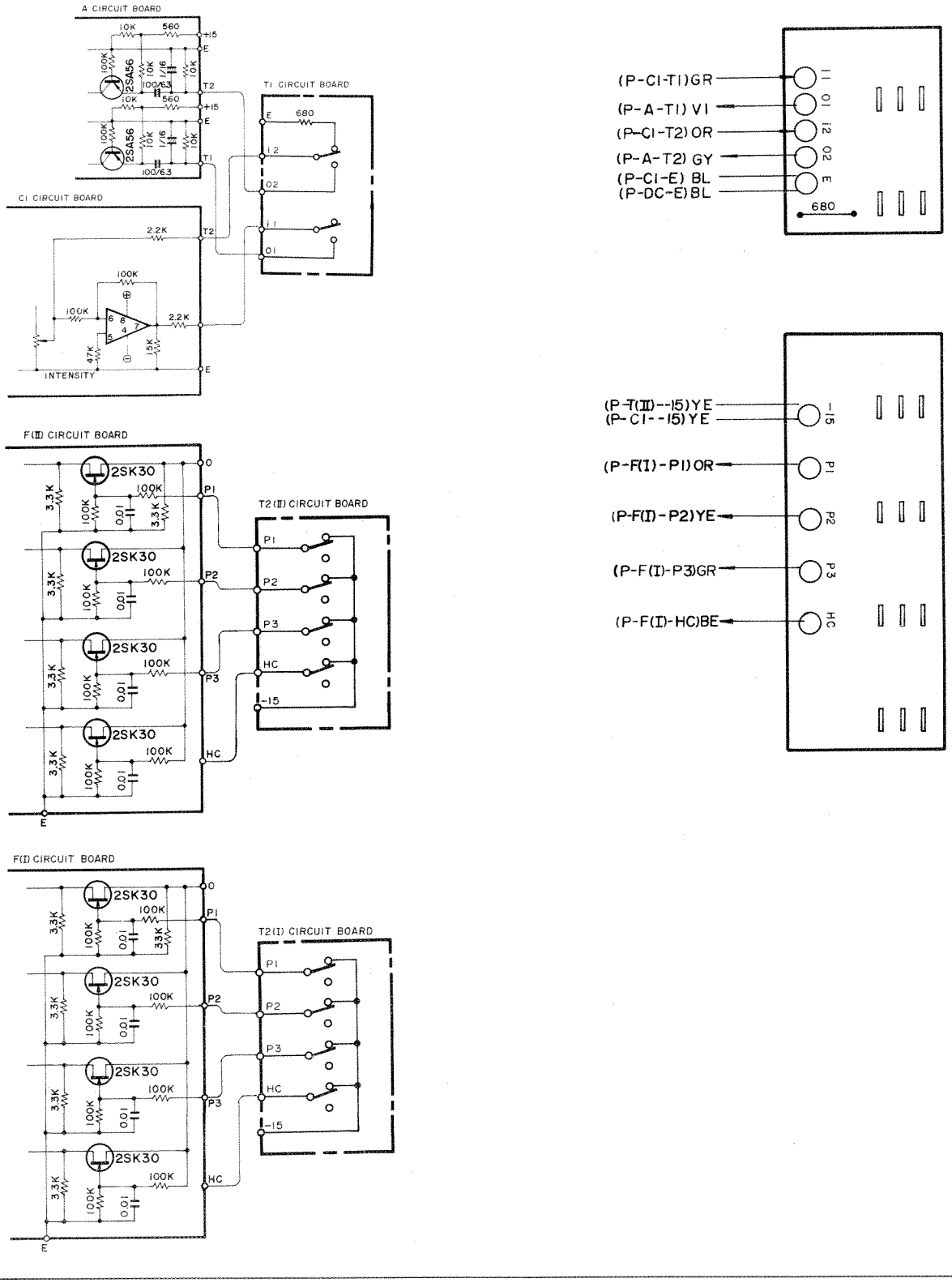

YAMAHA

ELECTRONIC PIANO

CP-30

PARTS LIST

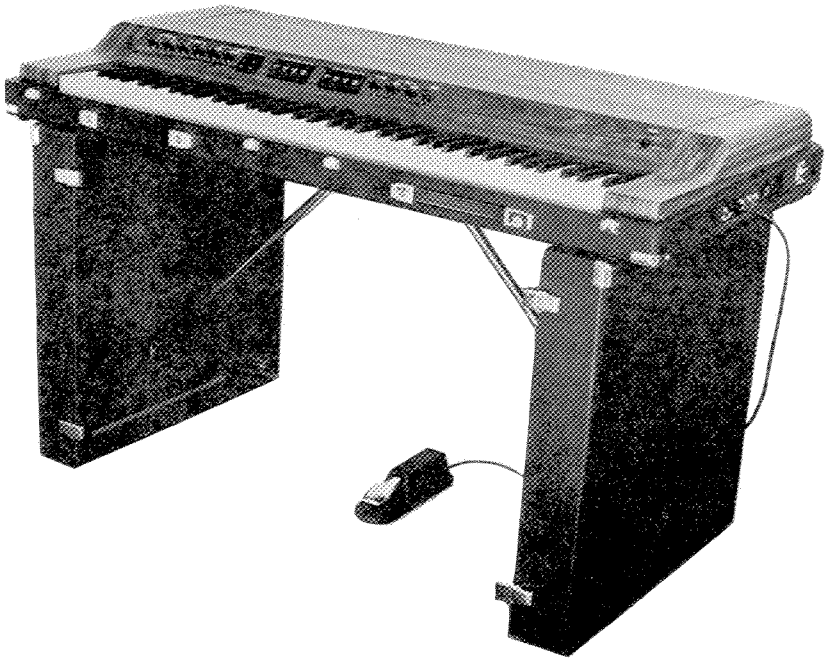

CONTENTS

1. Circuit Boards & Components(シート及びシート部品) 1
2. Power & Components (電源部品) 3
3. Contral Panel & Components (コントロールパネル部品) 4
4. Side Panel & Components (サイドパネル部品) 5
5. Keyboard & Components (鍵盤部品) 6
6. Sustainer Pedal (サスティナーペダル部品) 7
7. Cabinet (外装部品) 8

1 . Circuit Boards & Components

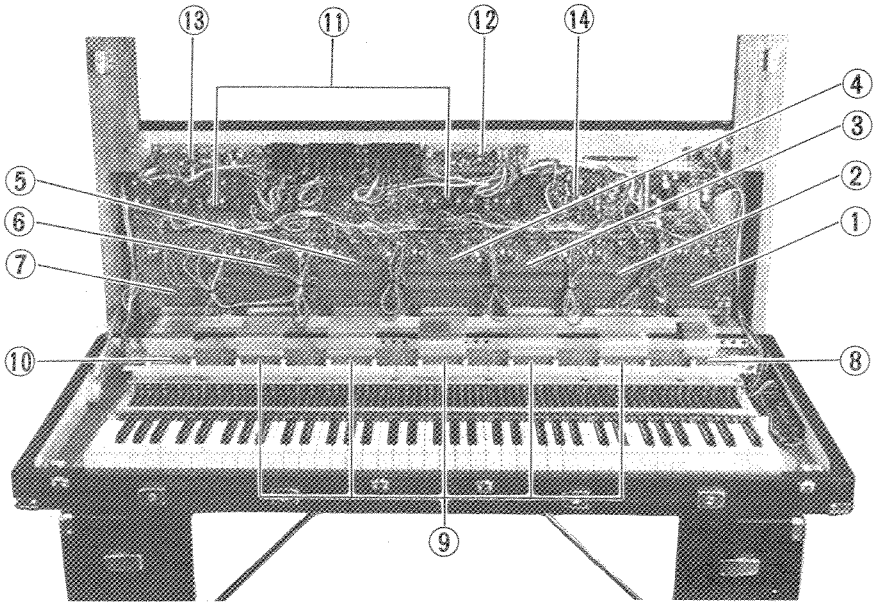

	Ref No.	Part No.(パーツ番号)	Description(部品名)		Remarks(備考)
※	①	3012300NA802280	G 7 Circuit Board ＃81821	G 7 シート	
※	②	3012300NA802270	G 6 —do.— ＃81811	G 6 シート	
※	③	3012300NA802260	G 5 —do.— —do.—	G 5 シート	
※	④	3012300NA802250	G 4 —do.— —do.—	G 4 シート	
※	⑤	3012300NA802240	G 3 —do.— —do.—	G 3 シート	
※	⑥	3012300NA802230	G 2 —do.— —do.—	G 2 シート	
※	⑦	3012300NA802220	G 1 —do.— —do.—	G 1 シート	
※	⑧	3012300NA802210	D 3 —do.— W/Key Switch	D 3 シート	
※	⑨	3012300NA802200	D 2 —do.— —do.—	D 2 シート	
※	⑩	3012300NA802190	D 1 —do.— —do.—	D 1 シート	
※	⑪	3012300NA802300	F Circuit Board ＃81801	F シート	
※	⑫	3012000NA802160	C 2 —do.— ＃81881	C 2 シート	
※	⑬	3012000NA802150	C 1 —do.— ＃81870	C 1 シート	
※	⑭	3012000NA802140	A —do.— ＃81861	A シート	
		4010000iA049500	Transistor 2SA 495(O)(Y)	トランジスター	
		4010000iA056170	—do.— 2SA 561(O)(Y)	トランジスター	
		4010000iA084410	—do.— 2SA 844(D)(E)	トランジスター	
		4010000iC045850	—do.— 2SC 458LG(C)	トランジスター	
		4010000iC075230	—do.— 2SC 752(O)(Y)	トランジスター	
		4010000iC082890	—do.— 2SC 828	トランジスター	
		4010000iC168120	—do.— 2SC1682(BL)	トランジスター	
		4010000iE000010	FET 2SK30	FET	
		4010000iF000040	Diode 1S1555	ダイオード	
		4010000iF000460	—do.— —do.—	ダイオード	Tapeing
		4010000iH000060	—do.— 10D－4	ダイオード	
※		4010000iG000360	Integrated Circuit CA3080	IC	
		4010000iG001390	—do.— RC4558	IC	

※ marked : New parts

	Ref No.	Part(((パーツ番号)	Description(部品名)		Remarks(備考)
		4010000iG0014000	－do.－ YM 253	I C	
※		3010000YM2520000	－do.－ YM 252	〃	
		4010000HT4100110	Variable Resistar B －200Ω	可変抵抗器	Solid Type
		4010000HT4100220	－do.－ B －1KΩ	〃	－do.－
		4010000HT4100440	－do.－ B －4.7KΩ	〃	－do.－
		4010000HT4101440	－do.－ B －47KΩ	〃	－do.－
※		4010000HS4104470	－do.－ A －10KΩ	〃	16φ ℓ＝25(mm) 0.984(inch) h＝12.5(mm) 0.492(inch)
※		4010000HS4104880	－do.－ B －10KΩ	〃	－do.－
※		4010000HS4104990	－do.－ B －1KΩ	〃	－do.－
		4010000HS4105000	－do.－ B－50KΩ×2	〃	－do.－
		4010000HS4105110	－do.－ A－50KΩ×2	〃	－do.－
		4010000HS4105220	－do.－ MN－50KΩ×2	〃	－do.－
		4010000HS4105330	－do.－ C －50KΩ×2	〃	－do.－
		4010000GE3001220	Choke Coil 100μH	高周波チョークコイル	
		4010000GE9001880	OSC Coil 200μH	OSCコイル	
		4010000GB0642220	Filter Coil 200mH	フィルターコイル	
		4010000GB0643330	－do.－ 330mH	〃	
		4010000GB0644470	－do.－ 470mH	〃	
※		3010000CB0278000	Switch Cover	スイッチカバー	for D1 & D2 Circuit Boards
※		3010000CB8088000	－do.－	〃	for D3 Circuit Board
※		4010000Mi8009880	Jumper－line	ジャンパーリード	for G1～G6 Circuit Boards
※		4010000Mi8009900	－do.－	〃	for G7 Circuit Board

※ marked : New parts

2 . Power & Components

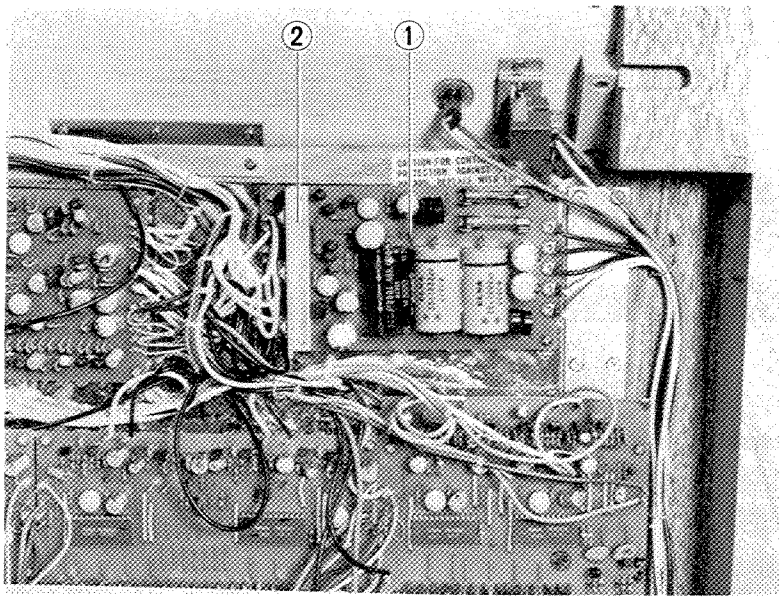

	Ref No.	Part No.(パーツ番号)	Description(部品名)		Remarks(備考)
※	①	3012000NA802110	DC Circuit Board	DCシート	Japan,S.African & Australian models
※		3012000NA802120	—do.—	〃	US & Canadian models
※		3012000NA802130	—do.—	〃	N.European & BS models
		4010000iA056170	Transister 2SA 561(O)(Y)	トランジスター	
		4010000iA077730	—do.— 2SA 777(R)	〃	
		4010000iB059620	—do.— 2SB 596(R)(O)	〃	
		4010000iC168120	—do.— 2SC1681(BL)	〃	
		4010000iD052610	—do.— 2SD 526(R)(O)	〃	
		4010000iF000100	Zener Diode 1S1715	ダイオード	
		4010000iH000140	Diode 10DC－4	〃	
		4010000iH000150	—do.— 10DC－4R	〃	
		4010000HT410070	Variable Resistor B－10KΩ	可変抵抗	
		4010000KB000330	Fuse 250V 1.0A	ヒューズ	Japan.S.African & Australian models
		4010000KB000730	—do.— Ⓢ 250V 1.0AT	〃	N.European & BS models
※		4010000KBQ01020	—do.— 1.0A SS－2	〃	US & Canadian models
※	②	3010000BA801750	Heat Sink	放熱板	

※ marked : New parts

3 . Control Panel & Components

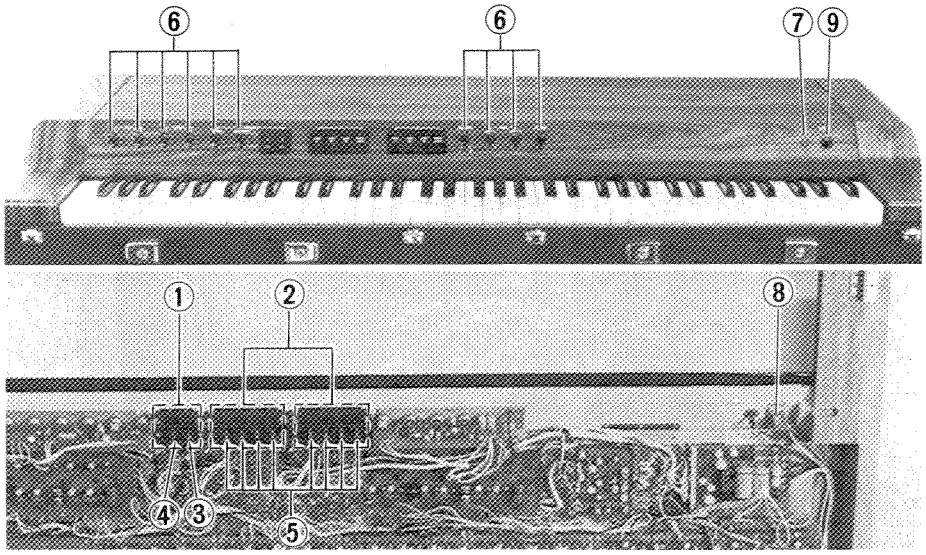

	Ref No.	Part No.(パーツ番号)	Description(部品名)		Remarks(備考)
※	①	3 0 1 2 3 0 N B 8 0 5 9 9 0	Tablet Assembly	タブレットアッセンブリー	TREMOLO
※	②	3 0 1 2 3 0 N B 8 0 6 0 0 0	—do.—	〃	Filter Ⅰ, Ⅱ
	③	3 0 1 0 0 0 N B 0 3 7 0 4 0	Switch Assembly	スイッチアッセンブリー	TREMOLOⅡ 1T
	④	3 0 1 0 0 0 N B 0 3 7 0 5 0	—do.—	〃	TREMOLOⅠ 1M
	⑤	3 0 1 0 0 0 N B 0 3 7 0 6 0	—do.—	〃	Filter Ⅰ, Ⅱ 1B
※	⑥	3 0 1 0 0 0 C B 8 0 8 4 0 0	Knob	つ ま み	Variable Resistor
	⑦	4 0 1 0 0 0 J B 0 0 0 3 6 0	Neon Bracket Lamp	ネオンブラケットランプ	BNR－3V
	⑧	4 0 1 0 0 0 K A 8 0 0 2 0 0	Push Switch SDG5P001	プッシュスイッチ	US & Canadian madols
		4 0 1 0 0 0 K A 8 0 0 2 1 0	—do.— —do.—502	〃	Australian,BS & N.Europian models 250V 4A
		4 0 1 0 0 0 K A 8 0 0 2 2 0	—do.— —do.—	〃	Japan & S.African models 125V 10A
	⑨	3 0 1 0 0 0 C B 8 0 8 4 5 0	Push Button	プッシュボタン	

※ marked : New parts

4 . Side Panel & Components

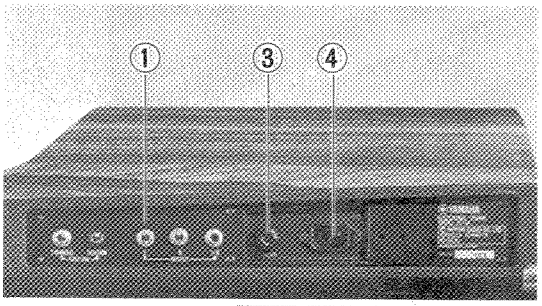

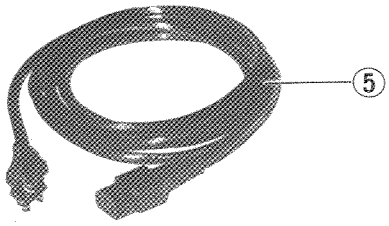

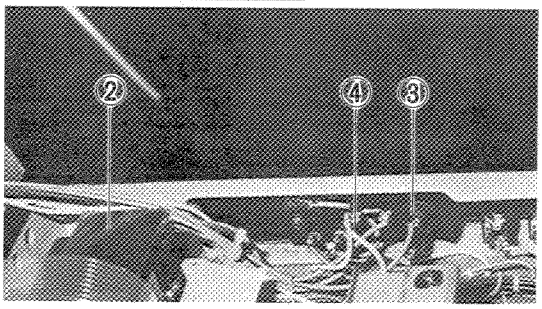

	Ref. No	Part No.(パーツ番号)	Description(部品名)		Remarks(備考)
※	①	3 0 1 0 0 0 A A 8 0 4 4 3 0	Side Panel	サイドパネル	Japan model
※		3 0 1 0 0 0 A A 8 0 4 4 4 0	－do.－	〃	U S model
※		3 0 1 0 0 0 A A 8 0 4 4 5 0	－do.－	〃	Canadian model
※		3 0 1 0 0 0 A A 8 0 4 4 6 0	－do.－	〃	Austrlian model
※		3 0 1 0 0 0 A A 8 0 4 4 7 0	－do.－	〃	S.African,BS & N.European models
※	②	4 0 1 0 0 0 G A 8 0 4 7 0 0	Power Transformer	電源トランス	
	③	4 0 1 0 0 0 L B 2 0 0 4 9 0	Fuse Holder ＃20049	ヒューズホルダー	Japan model
		4 0 1 0 0 0 L B 2 0 0 4 8 0	－do.－ ＃20048	〃	US,S.African,Australian & Canadian models
		4 0 1 0 0 0 L B 2 0 0 5 9 0	－do.－ ＃20059	〃	N.European & BS models
		4 0 1 0 0 0 K B 0 0 0 3 1 0	Fuse 250V 0.5A	ヒューズ	Japan,S.African & Australian models
		4 0 1 0 0 0 K B 0 0 1 1 5 0	－do.－ 250V 0.5A	〃	US & Canadian models
		4 0 1 0 0 0 K B 0 0 0 7 1 0	－do.－ ⑤ 250V 0.5AT	〃	BS & N.European models
		4 0 1 0 0 0 K B 0 0 0 8 2 0	Lead Type Fuse 250V 1A	リード付ヒューズ	US & Canadian models
	④	4 0 1 0 0 0 L B 3 0 0 2 9 0	A C Socket ＃30029 STF-74-A1	A C ソケット	PM－1000
		4 0 1 0 0 0 L B 2 0 0 2 5 0	Voltage Selector ＃20025	電圧切換器	S.African,BS & N.European models
	⑤	4 0 1 0 0 0 M G 0 0 0 5 8 0	A C Power Cord Assembly	電源コード	US & Canadian models
		3 0 1 2 0 0 M Z 8 0 0 6 5 0	－do.－	〃	S.African model PM－1000
		3 0 1 2 0 0 M Z 8 0 1 7 4 0	－do.－	〃	Australian model －do.－
		3 0 1 2 0 0 M Z 8 0 1 7 5 0	－do.－	〃	BS model －do.－
		4 0 1 0 0 0 M G 0 0 0 3 6 0	－do.－	〃	N.European model －do.－
		4 0 1 0 0 0 M G 0 0 0 5 6 0	－do.－	〃	Japan model －do.－

※ marked : New parts

5 . Keyboard & Components

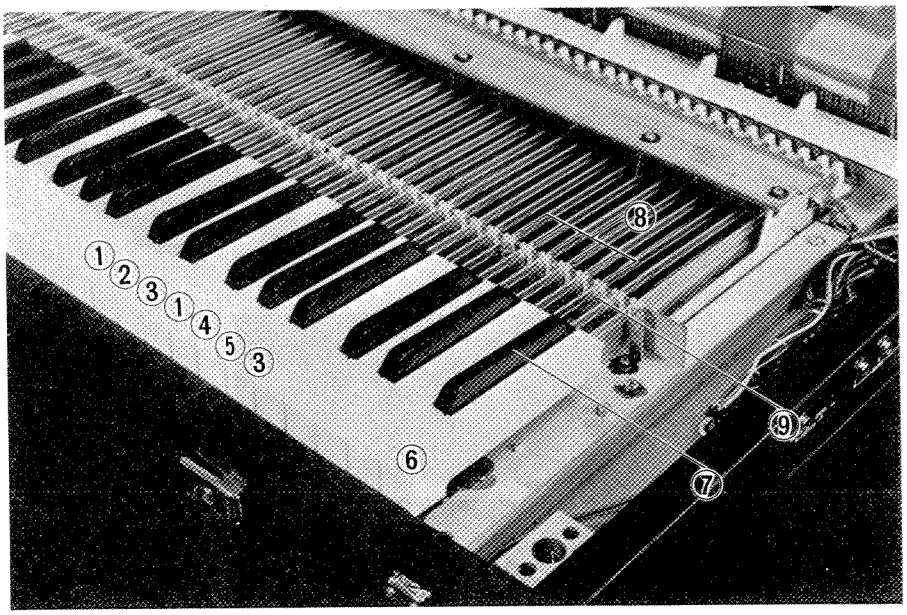

	Ref. No.	Part No.(パーツ番号)	Descrjption(部品名)		Remarks(備考)
※	①	3011801NB0434330	White Key Assembly C, F	白鍵アッセンブリー	
※	②	3011801NB0434440	—do.— D	〃	
※	③	3011801NB0434550	—do.— E, B	〃	
※	④	3011801NB0434660	—do.— G	〃	
※	⑤	3011801NB0434770	—do.— A	〃	
※	⑥	3011801NB0434990	—do.— G′	〃	Extreme right side of the Keyboard (73key)
※		3011801NB0451000	—do.— E′	〃	Extreme left side of the Keyboard (1 key)
※	⑦	3011801NB0435110	Black Key Assembly	黒鍵アッセンブリー	
※	⑧	3010000CB0278440	Support	サ ポ ー ト	
※	⑨	3010000CB0284110	Pibot Rubber	ピ ボ ッ ト ゴ ム	

※ marked : New parts

6. Sustainer Pedal

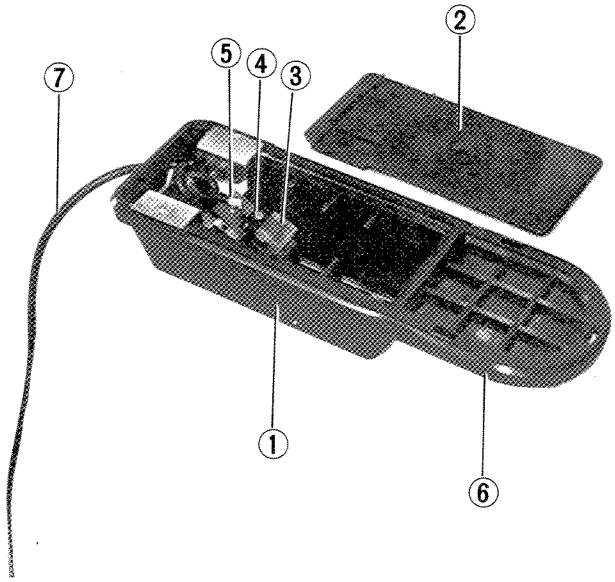

	Ref. No.	Part No.(パーツ番号)	Description(部品名)		Remarks(備考)
※	①	3 0 1 0 0 0 C B 8 0 6 7 4 0	Pedal Box	ペダル本体	
※	②	3 0 1 0 0 0 C B 8 0 6 7 5 0	Bottom Plate	底板	
	③	3 0 1 0 0 0 N B 0 3 7 1 4 0	Tablet Switch	タブレットスイッチ	1M W／Actuator
※	④	3 0 1 0 0 0 C B 8 0 8 3 6 0	—do.— Cover	接点カバー	
※	⑤	4 0 1 0 0 0 C A 8 0 0 4 5 0	Fiber Washer	ファイバーワッシャ	
※	⑥	3 0 1 0 0 0 A A 8 0 3 2 4 0	Pedal	ペダル	
		3 0 1 0 0 0 A A 8 0 3 2 6 0	—do.— leaf Spring	ペダル板バネ	
※	⑦	3 0 1 0 0 0 M i 0 1 4 2 2 0	Cord Assembly	コード	

※ marked : New parts

7 . Cabinet

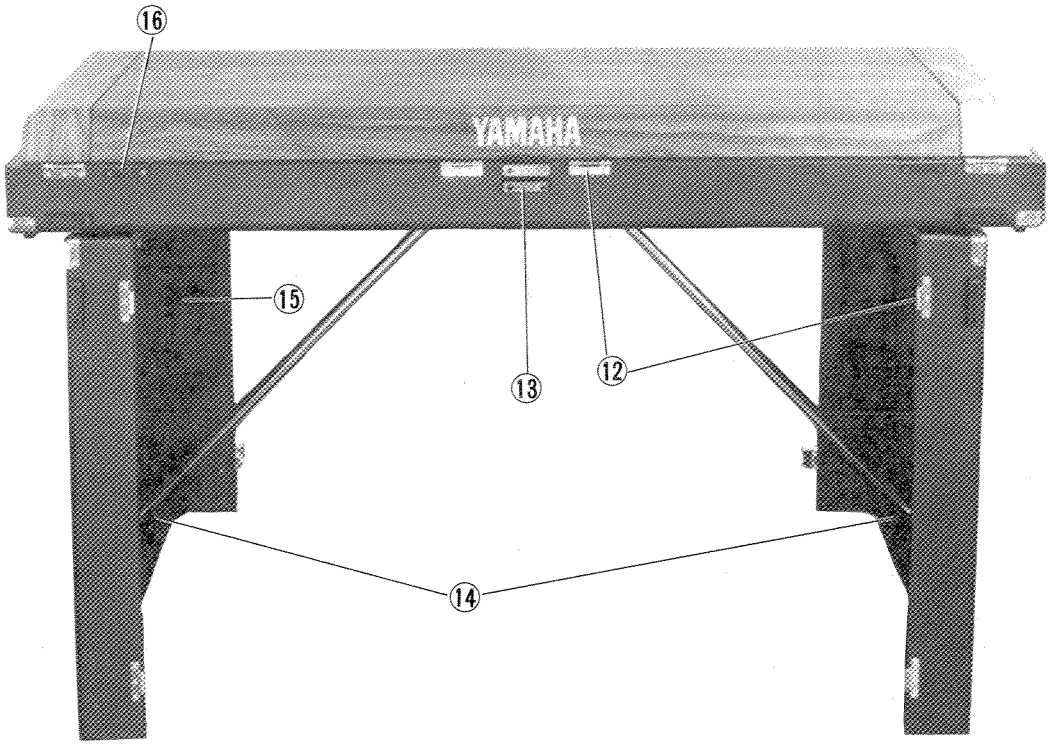

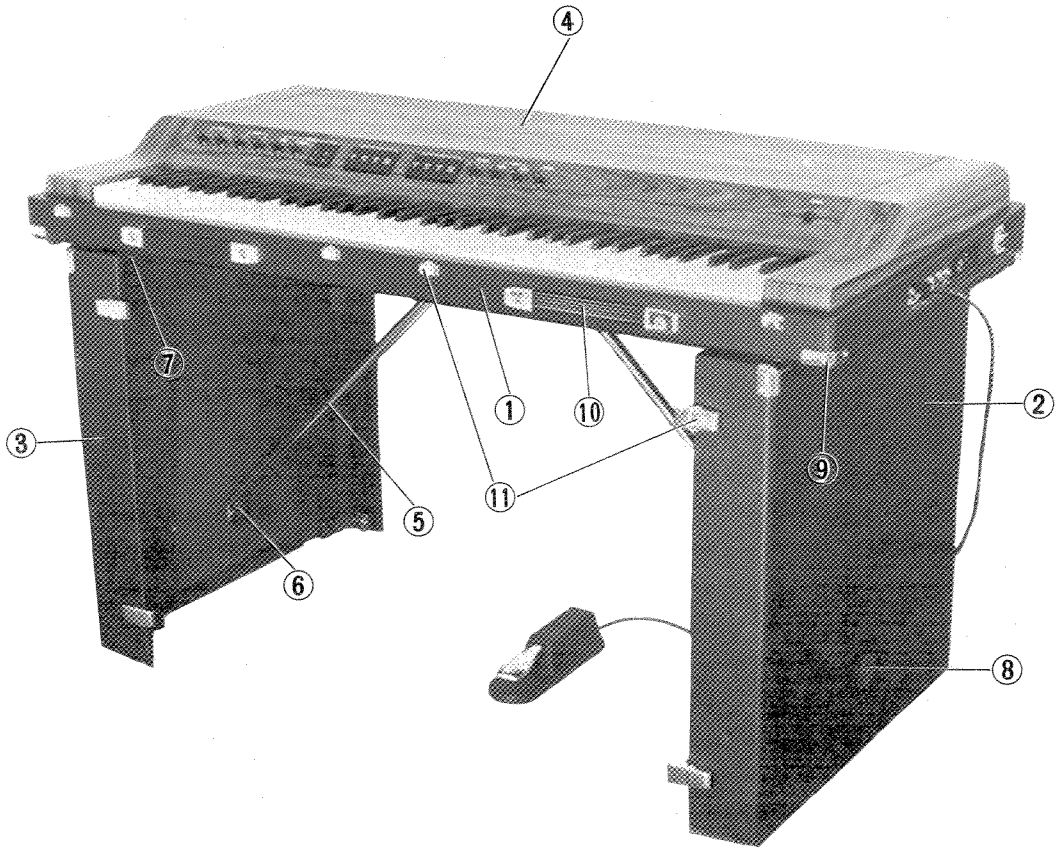

	Ref. No.	Part No.(パーツ番号)	Description(部品名)		Remarks(備考)
※	①	3012302402140 0	Bottom Frame	底　枠	
※	②	3012302402135 0	Lege (Left)	蓋　脚(左)	
※	③	3012302402136 0	－do.－ (Right)	蓋　脚(右)	
※	④	3012302404101 0	Top Board	屋　根	
※	⑤	3010000AA804390	Stay	脚　柱	
※	⑥	3010000CB808330	Knob Bolt	ノブネジ	
		3010000AA804630	Stay Ling	脚柱リング	
※	⑦	4010000CB808340	Knod Bolt	ノブネジ	
※	⑧	3010000AA804270	Stay Nut	脚用ナット	
		4010000EB330160	Flat Head Screw 3×16 ZMC2-Bl	皿小ネジ	
	⑨	3054000AA800790	Corner Holder Blacket	コーナー金具	J－45
		4010000EZ980140	Truss Head Tapping Screw 3×12 FCrM$_3$-2b	トラスタッピンネジ1種	
※	⑩	3010000NB805950	Handle Assembly	取手アッセン	
		4010000EQ035130	Round Head Wooden Screw 3.5×13 ZMC2-Y	丸木ネジ	
	⑪	4010000AA802450	Lock	パッチン錠	PM－430
		4010000EC230160	Truss Head Screw 3×16 FCrM$_3$ 2b	⊕トラス小ネジ	
		4010000EC230140	Truss Head Screw 3×14 FCrM$_3$ 2b	⊕トラス小ネジ	
		802460			
	⑫	3010000AA981810	Hanging Hinge	引掛蝶番	
		4010000EB230100	Flat Head Screw 3×10 FCrM$_3$ -2b	⊕皿小ネジ	
	⑬	3010000CB010310	Case Leg	脚	TA－20, 30 YC－30
		4010000EP335200	Flat Head Wooden Screw 3.5×20 ZMC2-Bl	⊕皿木ネジ	
※		3010000AA804540	Washer for Leg Holder	脚受座金	
		4010000EP335130	Flat Head Wooden Screw 3.5×13 ZMC2-Bl	⊕皿木ネジ	
※	⑭	3010000AA804290	Slip Washer	滑り座	
		4010000ER330160	Oval Head Wooden Screw 3×16 ZMC2-Bl	⊕丸皿木ネジ	
※	⑮	3010000NB805960	Pedal Stopper Band Assembly	ペダル止めバンド	
※		3010000AA804320	Hanging Holder Blacket	引掛金具	
		4010000EQ335130	Round Head Wooden Screw 3.5×13 ZMC2-Bl	⊕丸木ネジ	
※	⑯	3054000AA804360	Hinge	蝶番	
		4010000EO030120	Flat Head Tapping Screw 3×12 ZMC2-Y	皿タッピンネジ1種	
		3054000AA802530	Stay Left	ステー(左)	PM－700
		3054000AA802540	Holder Stay	ステー押え金具	－do.－
		4010000EQ031100	Round Head Wooden Screw 3.1×10 ZMC2-Y	丸小ネジ	－do.－

※ marked : New parts

Ref No.	Part No.(パーツ番号)	Description(部品名)		Remarks(備考)

●SETUP

1. Removal Top Lid

a. Unlatch the locks ① ～ ④ of the top lid, (Fig. 1) then lift the lid.

Fig. 1

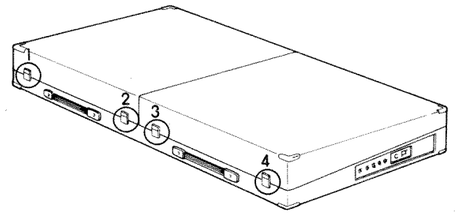

b. Remove the screws ① ～ ④ on the in side of the lid and take out the two supporting bars, the power cord and the sustain pedal (refer to Fig. 2).

Fig. 2

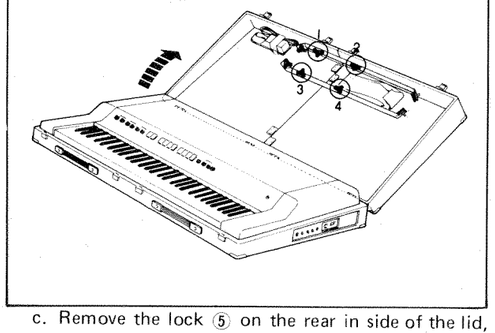

c. Remove the lock ⑤ on the rear in side of the lid, then seperate the right and left parts of the cover (refer to Fig. 3).

Fig. 3

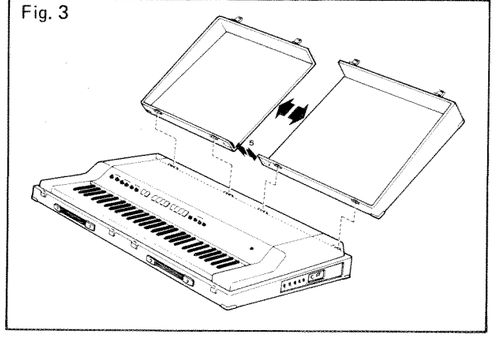

2. Assembly of the Body

a. Position the body on a suitable base, then attach the lids on both sides (refer to Fig. 4).
* Use screws ① ～ ④ as shown in Fig. 1 when attaching the lids.

b. Insert the supporting bars between the body and the lids on both sides, then tighten them by the screws (refer to Fig. 4).

Fig. 4

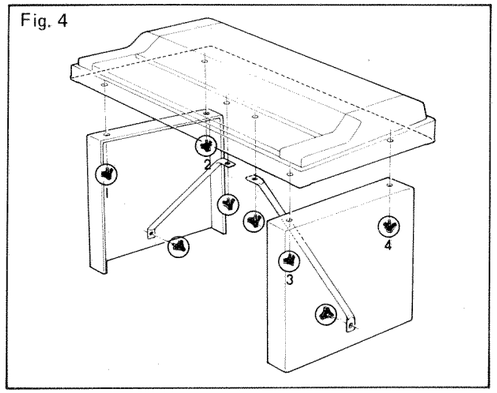

3. Interconnection

Insert the plugs of the power cord, output cord, pedal switch, etc. into the body (refer to Fig. 5)

Fig. 5

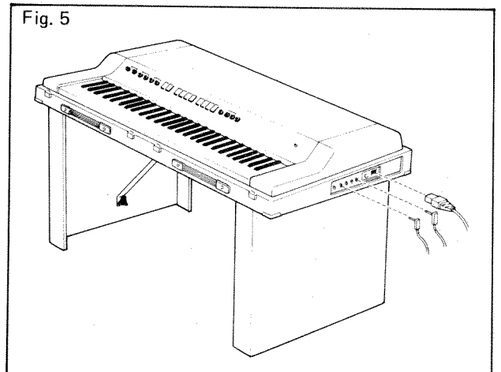

●DISASSEMBLY PROCEDURES

1. Opening and Closing the Panel

(1) Loosen the screws 1 and 2 located below the both sides of the body, then raise the panel upward.

(2) Fix the panel by hooking the stopper stored at the left side of the panel onto the body (refer to Fig. 1).

Fig. 1

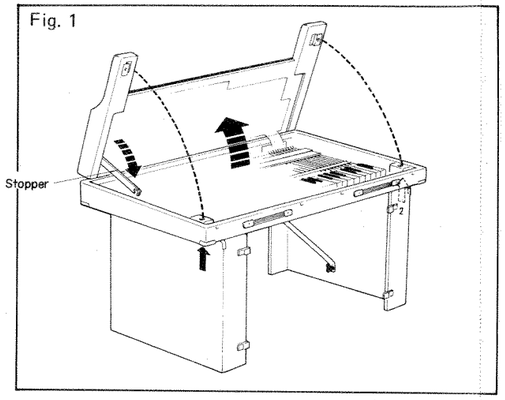

3. Keyboard Removal

(1) Open the panel referring to the step 1.

(2) Remove the screws of the keyboard pressing fitting and the support pressing fitting.

(3) When removing the keyboard, remove the screw of the D board while taking care not to dash the rear part of the keyboard against the switch pieces, then move the D board to the rear side and remove the keyboard.

(4) Make sure to remove the black key previously and then pull out the white key.

Fig. 3

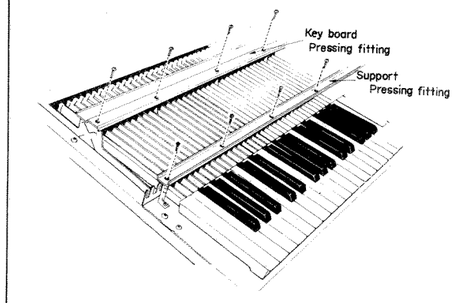

2. D Circuit Board Removal

(1) Open the panel referring to the step 1.

(2) Remove the screws 1 – 4 as shown in Fig. 2, then remove the boards D1 ～ D3.

Fig. 2

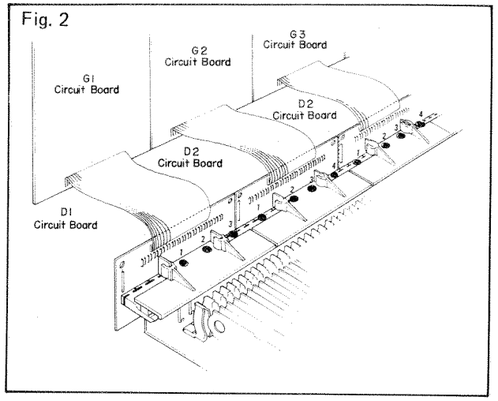

4. Disassembly of the Pedal

(1) Remove the pedal by inserting the fingers, as if peeling it.

(2) Replace the pedal switch after removing the screw 1.

Fig. 4

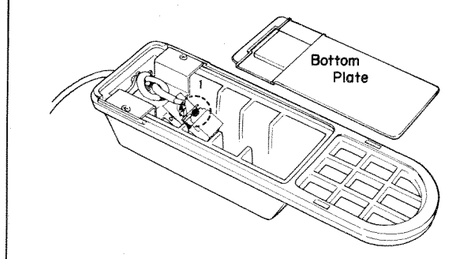

1. G7 Circuit (C7 # ~G7)

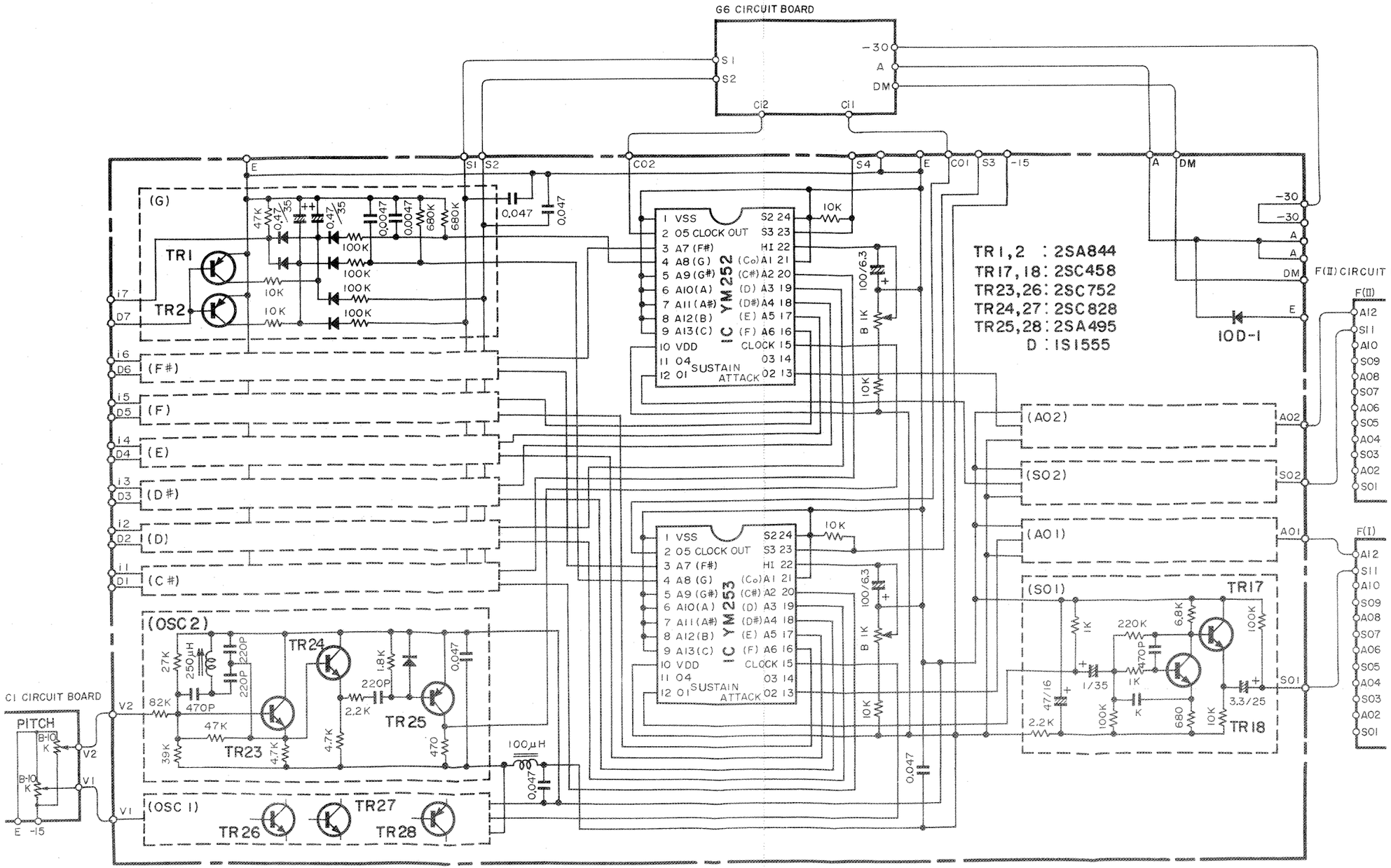

G7 Circuit Board & Wiring

NA80228

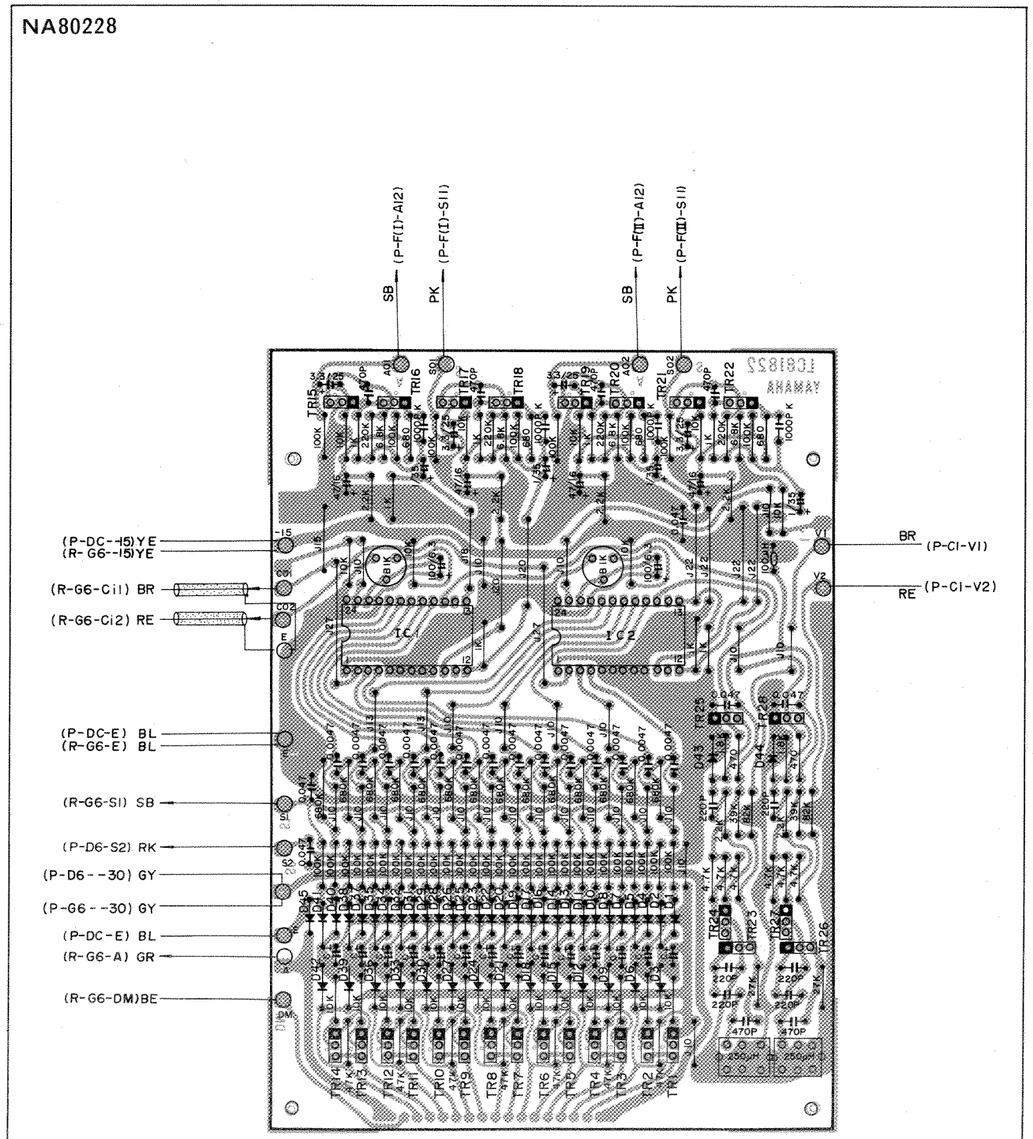

1. Transistor
   Tr1 ~ 14 : 2SA844 (D, E)
   Tr15 ~ 22: 2SC458 LG (C)
   Tr23, 26 : 2SC752 (O), (Y)
   Tr24, 27 : 2SC828 (P)
   Tr25, 28 : 2SA495 (O), (Y)
2. IC
   IC 1 : YM253
   IC2 : YM252
3. Diode
   D1 ~ 44 : 1S1555
   D45 : 10D1
4. Choke coil
   250μH x 2

▼ Adjustment Locations

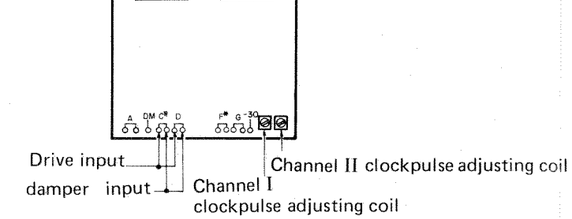

Attack adjusting pot is already adjusted before shipment, therefore do not touch it normally. However, if adjustment is heeded because of IC replacement, etc., procede as follows;

1. Remove wires from output terminals (AO1, SO1, AO2 and SO2). Connect A 1KΩ load resistor from each output terminal to ground, respectively.
2. Apply —5VDC to the drive input (terminal i4) for note name E.
3. Measure the output waveform. Amplitude and waveshape should be as shown in the table below. Adjust respective B—1KΩ adjusting pot as necessary.

(Please recheck pattern of waveform)

Output Terminal	Waveform	Amplitude (P—P)
AO1	2 4 2 4	350 mV
SO1	6 2 6 2	950 mV
AO2	5 5	300 mV
SO2	7 7	950 mV

G7

Terminal description YM253 and YM252

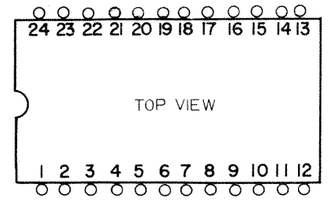

Terminal No.	Terminal name	Description
1	VSS	0 V
2	05 CLOCK OUT	—4.0VClock output terminal
3	A7 (F#)	(OFF) (ON) 0 → —1.5V→ 0
4	A 8 (G)	
5	A 9 (G#)	0 V KEY
6	A10(A)	0 V
7	A11(A#)	0 V
8	A12(B)	0 V
9	A13(C)	0 V
10	VDD	—15V
11	04	0 V
12	01 SUSTAIN	YM253 6 2 6 2 YM252 7 7
13	02 ATTACK	2 4 2 4 5 5 Please recheck pattern
14	03	0 V
15	CLOCK	—6.0V Clock input terminal
16	A 6 (F)	KEY (OFF)(ON) 0 → —1.5V→ 0
17	A 5 (E)	
18	A 4 (D#)	
19	A 3 (D)	
20	A 2 (C#)	
21	A 1 (C)	0 V
22	H 1	0 V
23	S 3	0 V
24	S 2	0 V

* Thus, G6 ~ G1 circuit boards are same except for note terminal voltage.

2. G2~G6 Circuit (C2#~C7)

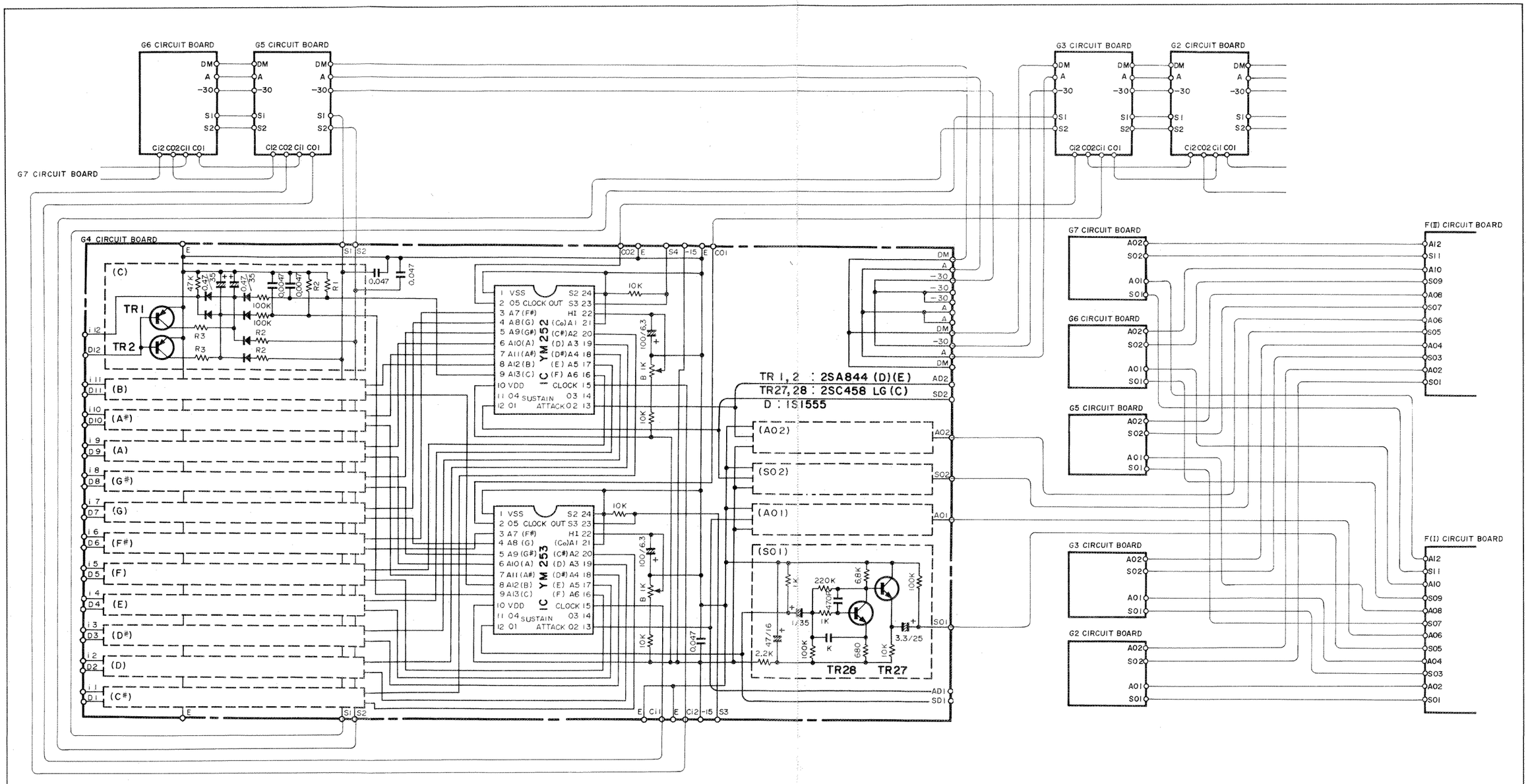

G2～G6 Circuit Board & Wiring

NA80223～7

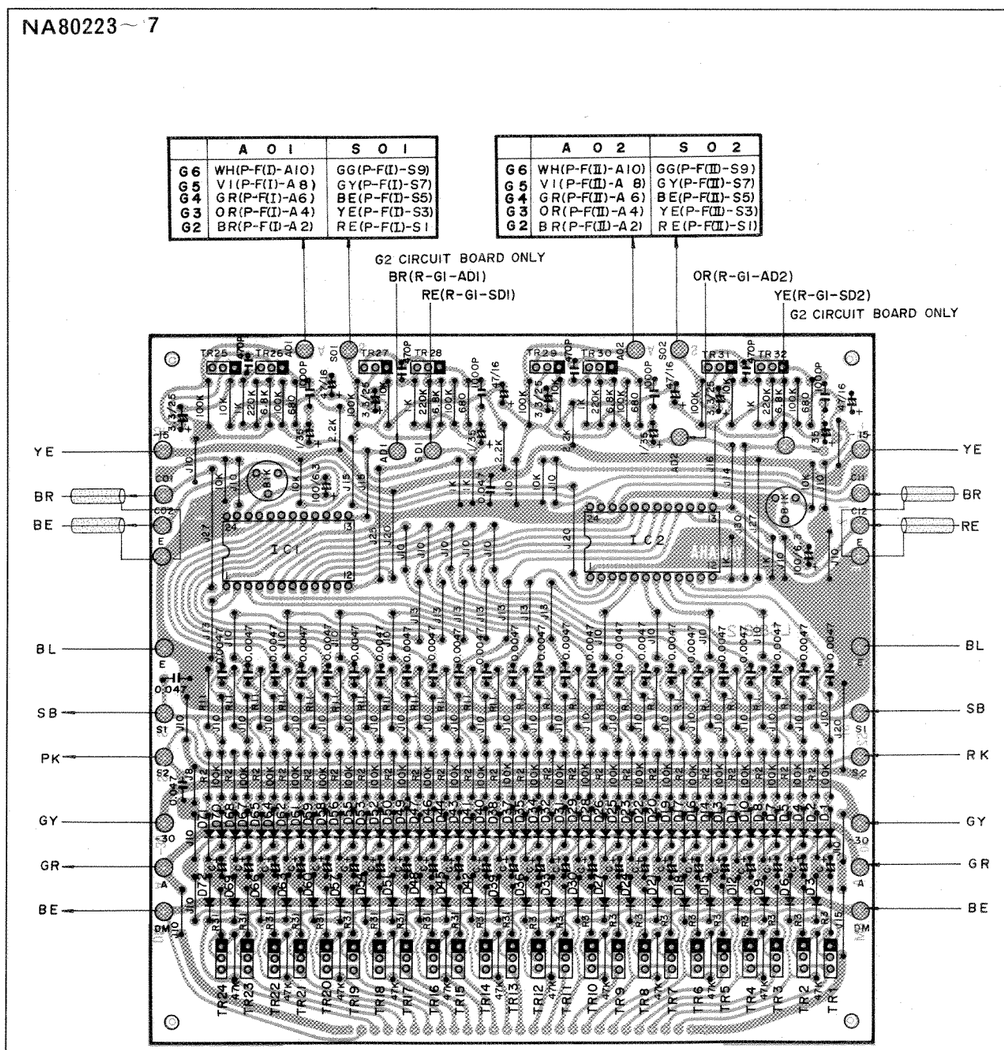

1. Transistor
   Tr1～24 : 2SA844 (D) (E)
   Tr25～32: 2SC458 LG (C)
2. IC
   IC1 : YM253
   IC2 : YM252
3. Diode
   D1～72 : 1S1555
4.

▼ Adjustment Locations

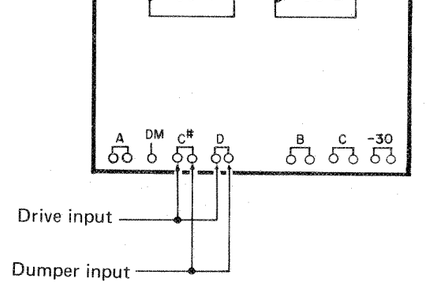

G2 ～ G6

Circuit board	R I	R II	R 2	R 3	R3I
G 2	3.3M	3.3M	270K	47K	47K
G 3	2.2M	2.7M	220K	22K	33K
G 4	1.8M	2.2M	180K	15K	15K
G 5	1.2M	1.5M	150K	12K	12K
G 6	820K	1M	120K	10K	10K

Attack adjusting pot is already adjusted before shipment, therefore do not touch it normally. However, if adjustment is needed because of IC replacement, etc., procede as follows;

1. Remove wires from output terminals (AO1, SO1, AO2 and SO2). Connect a—1KΩ load resistor from each output terminal to ground, respectively.
2. Apply —5VDC to the drive input (terminal i4) for note name E.
3. Measure the output waveform. Amplitude and waveshape should be as shown in the table below. Adjust respective B—1KΩ adjusting pot as necessary.

(Please recheck pattern of waveform)

Output Terminal	Waveform	Amplitude (P—P)
AO1	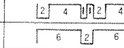	350 mV
SO1	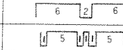	1100 mV
AO2	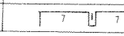	300 mV
SO2		1100 mV

3. G1 Circuit (E1~C2)

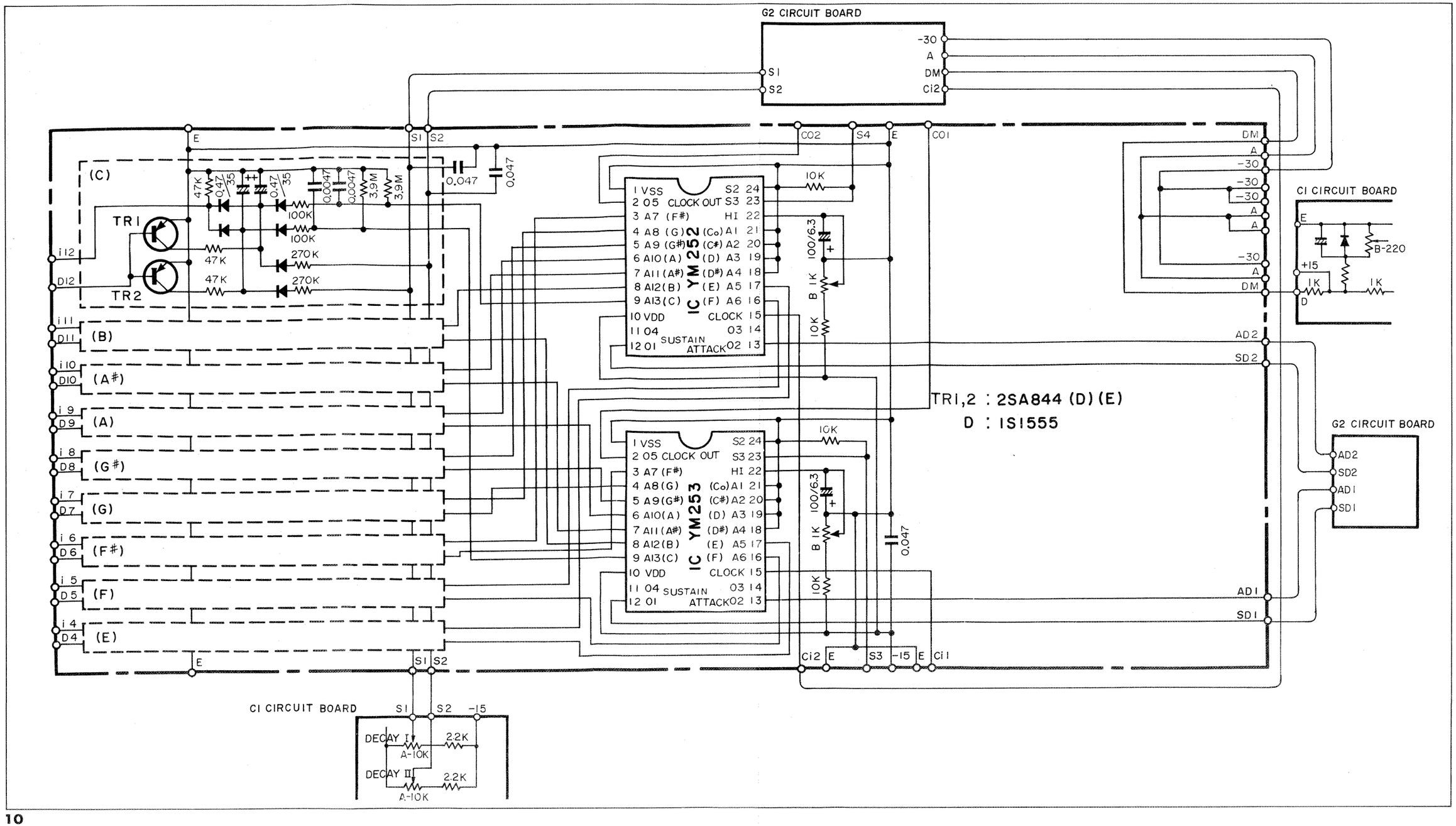

D1

D1 Circuit Board & Wiring

1. Diode
   D1～9 : 1S1555
2. Electrolytic capacitor
   1/50 (± 10%)
3. Key contacts, 9 keys

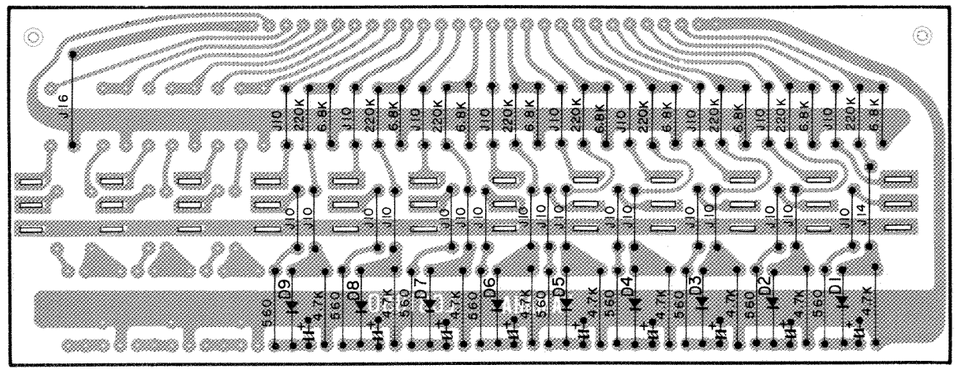

7. F Circuit

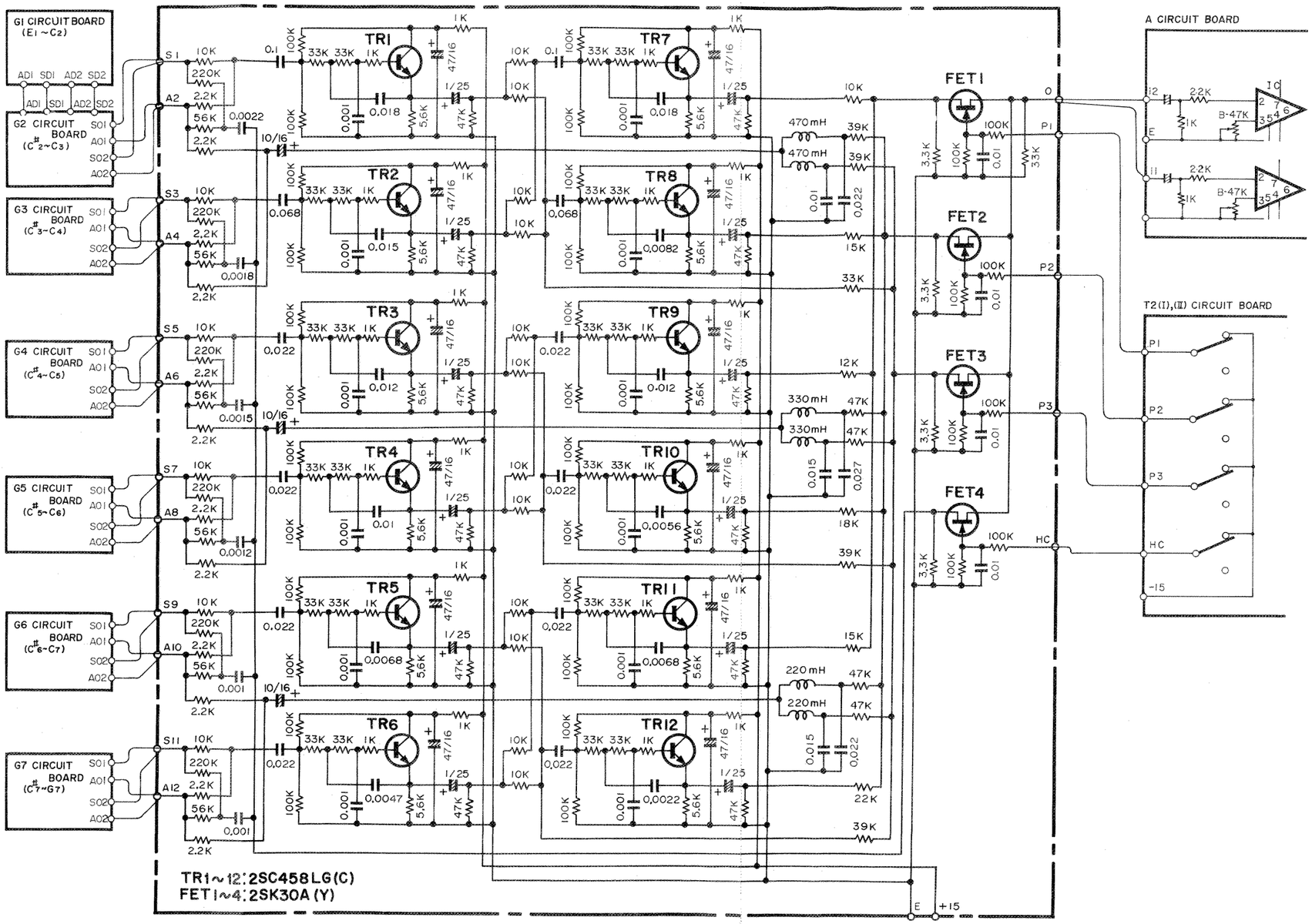
G1 CIRCUIT BOARD (E1~C2)
ADI SDI AD2 SD2
G2 CIRCUIT BOARD (C#2~C3)
G3 CIRCUIT BOARD (C#3~C4)
G4 CIRCUIT BOARD (C#4~C5)
G5 CIRCUIT BOARD (C#5~C6)
G6 CIRCUIT BOARD (C#6~C7)
G7 CIRCUIT BOARD (C#7~G7)
SOI AOI SO2 AO2
S1 A2 S3 A4 S5 A6 S7 A8 S9 A10 S11 A12
TR1 TR2 TR3 TR4 TR5 TR6 TR7 TR8 TR9 TR10 TR11 TR12
FET1 FET2 FET3 FET4
A CIRCUIT BOARD
T2(I),(II) CIRCUIT BOARD
P1 P2 P3 HC -15
TR1~12:2SC458LG(C)
FET1~4:2SK30A(Y)
E +15

F

F Circuit Board & Wiring

NA80230

1. Transistor
   Tr 1 ～ 4 : FET 2SK30A(Y)
   Tr 5 ～ 16 : 2SC458LG(C)
2. Filter coil
   200mH × 2
   330mH × 2
   470mH × 2

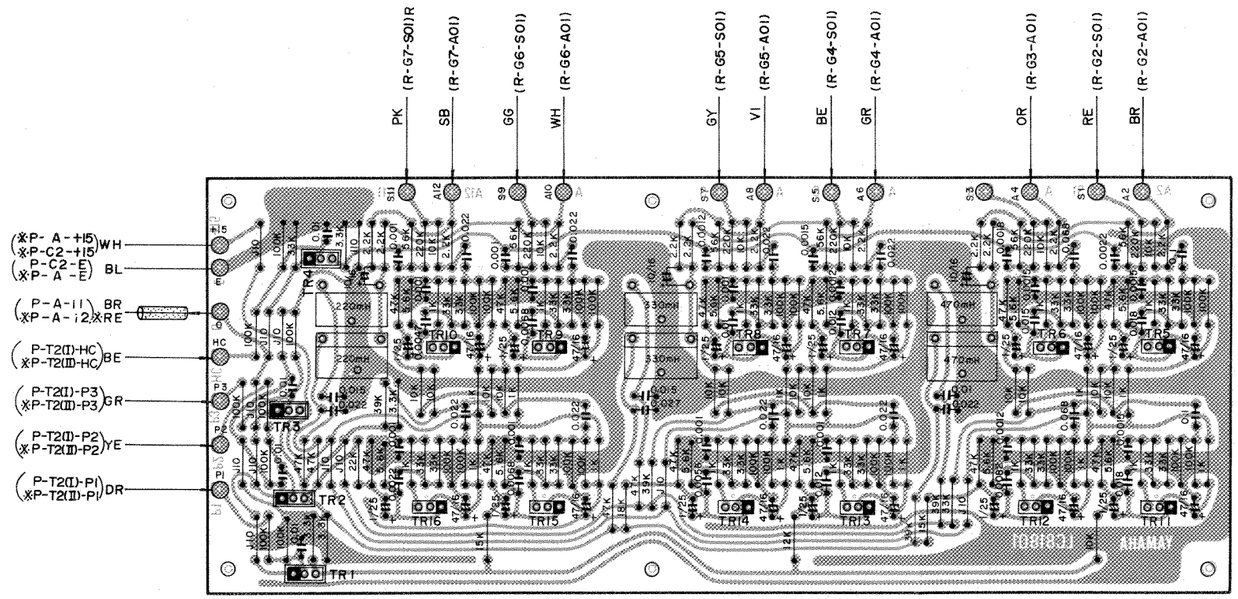

(Each sound tone waveform)
at depressing F4 key : OUTPUT (0 terminal)

Channel I

(PIANO 1)

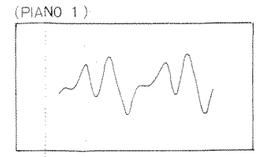

(PIANO 2)

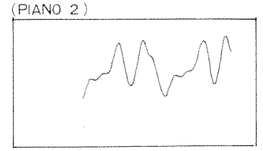

(PIANO 3)

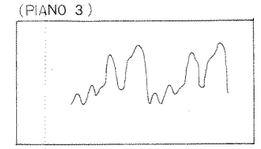

(HARPSICHORD)

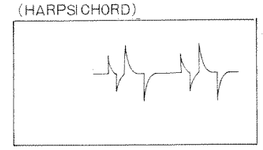

Channel II

(PIANO 1)

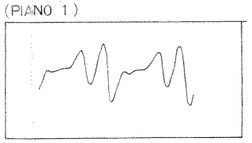

(PIANO 2)

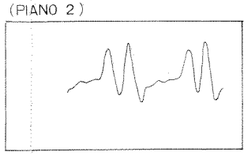

(PIANO 3)

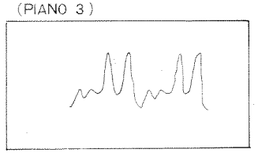

(HARPSICHORD)

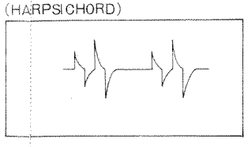

8. A Circuit

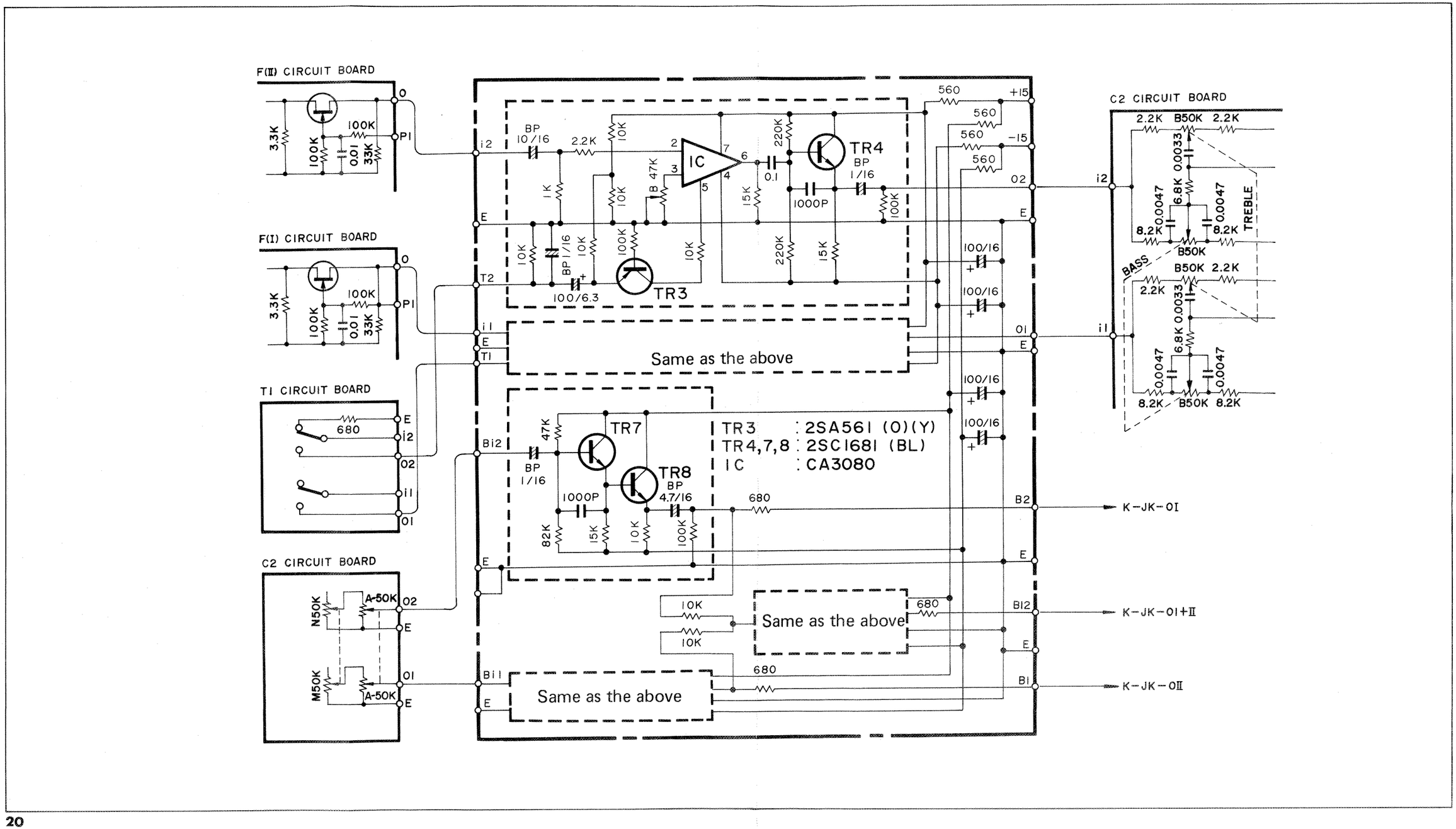
F(II) CIRCUIT BOARD
F(I) CIRCUIT BOARD
T1 CIRCUIT BOARD
C2 CIRCUIT BOARD
C2 CIRCUIT BOARD
TR3
TR4
TR7
TR8
IC
Same as the above
Same as the above
Same as the above
TR3 : 2SA561 (O)(Y)
TR4,7,8 : 2SC1681 (BL)
IC : CA3080
K-JK-OI
K-JK-OI+II
K-JK-OII
TREBLE
BASS

A

A Circuit Board & Wiring

NA80214

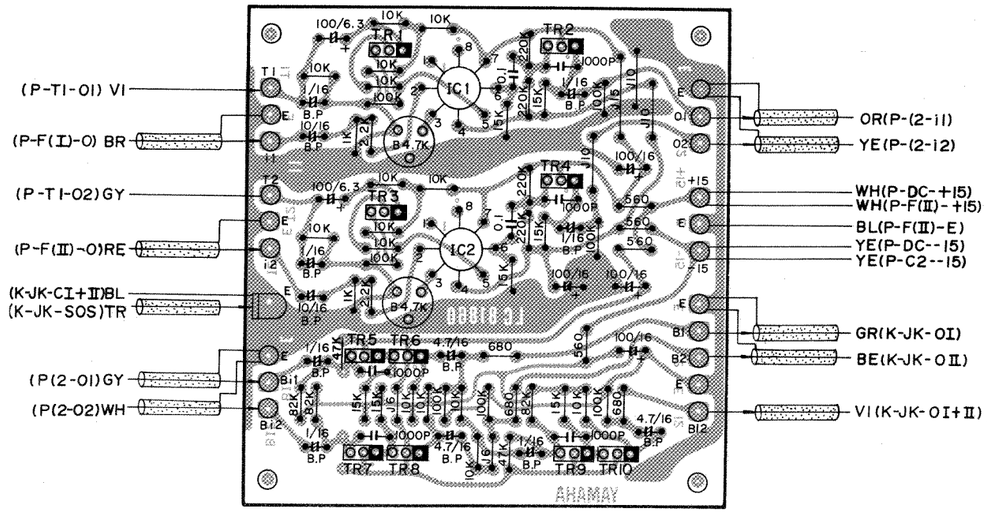

1. Transistor
   Tr1, 3 : 2SA561 (O) (Y)
   Tr2, 4, 5, 6:2SC1681 (BL)
2. IC
   IC1, 2 : CA3080

▼ **Adjustment Locations**

9. C1 Circuit

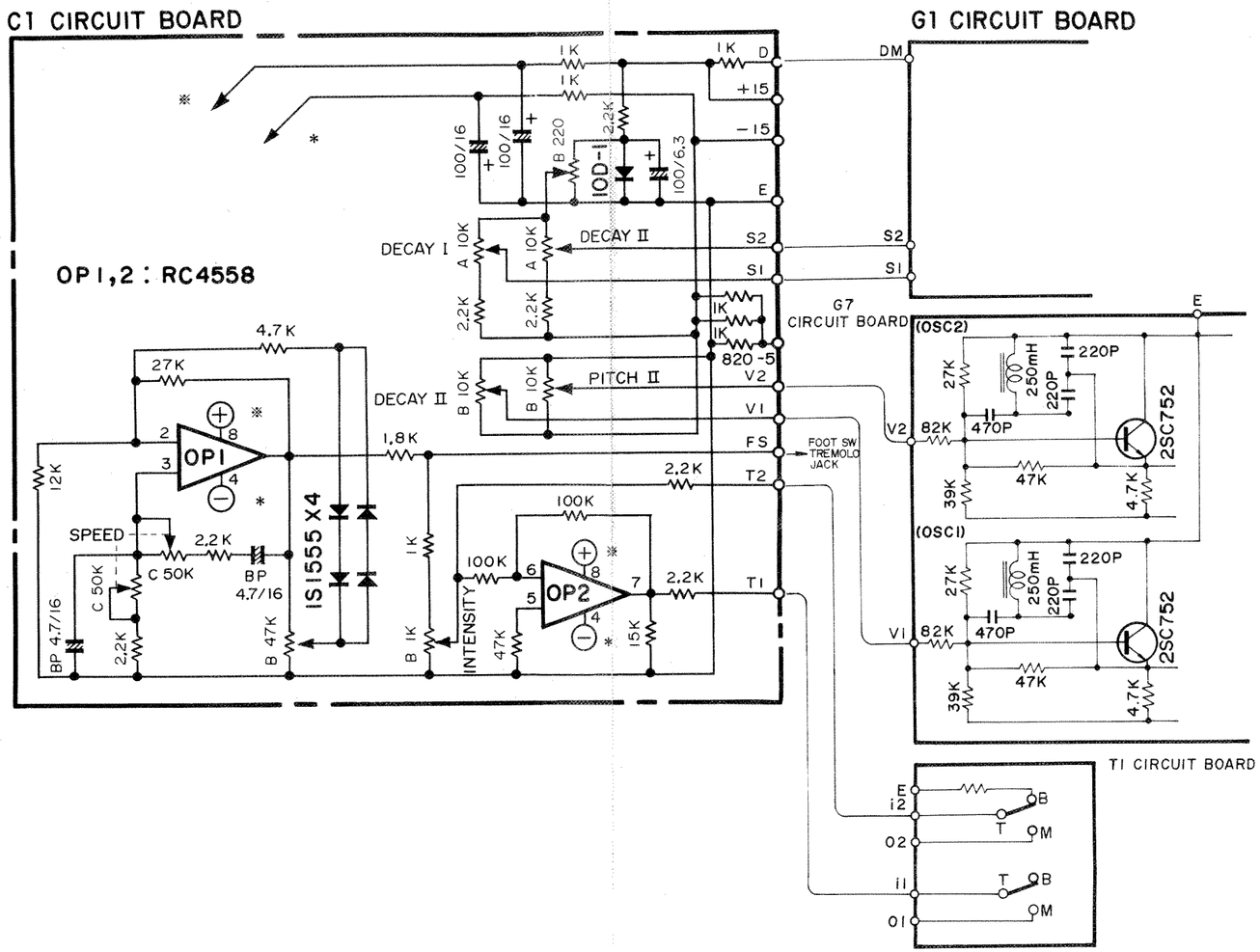
C1 CIRCUIT BOARD
G1 CIRCUIT BOARD
OP1,2 : RC4558
DECAY I
DECAY II
PITCH II
SPEED
INTENSITY
OP1
OP2
1S1555 X4
10D-1
G7 CIRCUIT BOARD
(OSC2)
(OSC1)
2SC752
FOOT SW TREMOLO JACK
T1 CIRCUIT BOARD

C1

C1 Circuit Board & Wiring

NA80215

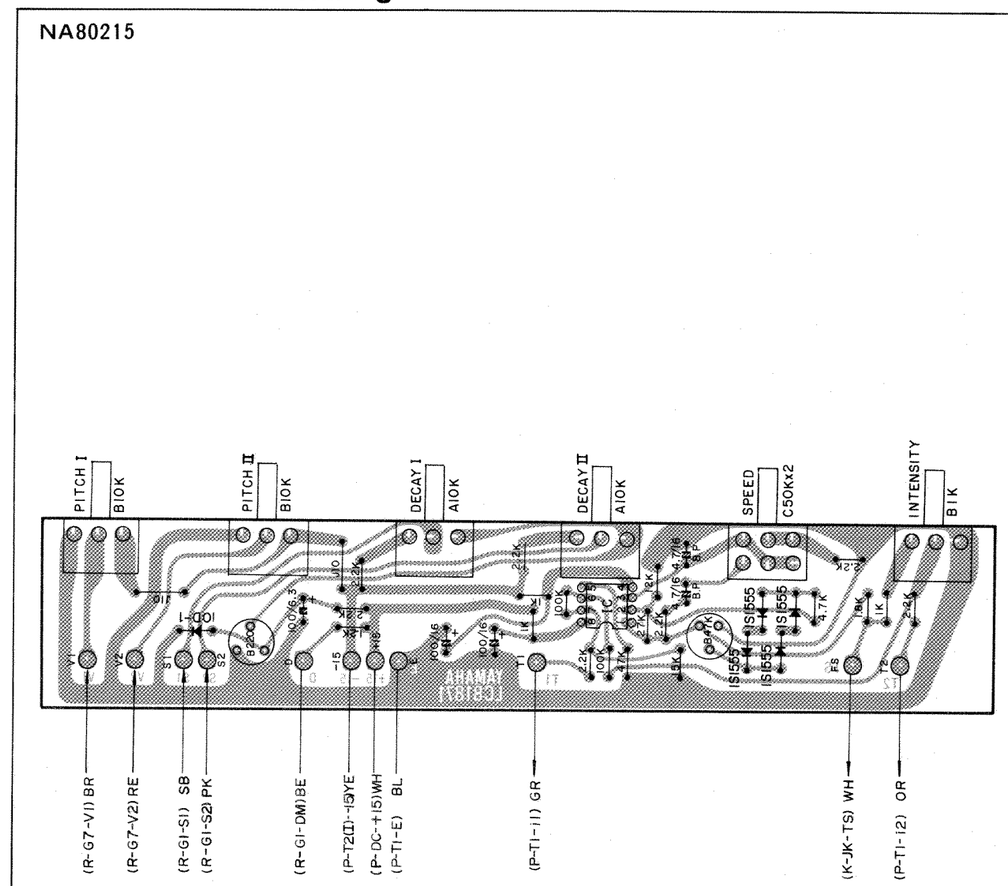

1. IC
   RC 4558
2. Electrolytic capacitors 100/6.3, 100/16x2 are firmly attached.

1. Variation range of PITCH 1, 2 is approx. 437 – 453 Hz.
2. Variation range of TREMOLO SPEED is approx. 0.5 – 11 Hz.
3. Modulation degree of TREMOLO INTENSITY is approx. 70% at maximum.

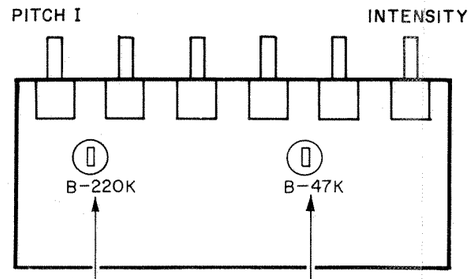

Adjustment is made such that, when pots of DECAY I, II are set at minimum, +0.1V will be present at S1 and S2 terminals and when they are set at maximum, –11V will be present.

Oscillation voltage adjusting pot

10. C2 Circuit

