WPM

Optimised Line Array – Two-way, passive line array element

WAVEFRONT PRECISION

Features

- Ultra-compact line array
- Scalable resolution for advanced array control
- External, dedicated, multi-channel Class D amplification
- Industry-leading DISPLAY software interacts with DSP for highly-accurate results
- Switch mode power supplies with global mains voltage operation
- Fast, integral 3-point flying systems for up to 16 enclosures
- Side and rear handles for ease of handling and setting splay angles
- 100° horizontal constant directivity pattern control



Applications

- Touring sound reinforcement for small and medium-size venues
- Fixed installations in concert halls, theatres, ballrooms and HoW
- Sports stadium and arena installations
- Corporate AV events

While Martin Audio's multi-cellular MLA technology represents the ultimate in coverage control, with individually powered and processed cells within each enclosure, the scalable resolution of WPM offers greatly improved coverage consistency and control compared to a standard line array and provides a flexible pathway to advanced array optimisation.

The WPM is incredibly versatile. Its very small footprint and light weight make it the system of choice for smaller venues which require superb fidelity, coverage consistency and control from an ultra-compact line array. It is also very powerful — 12-box array will throw beyond 35 metres (115ft) and produce live music at high levels in up to 3000-seat venues. It embodies the very latest acoustic technology in an ultra-compact enclosure and is the ideal system for small-to-medium scale theatres and live music venues, AV events and installations in concert halls, ballrooms and HoW.

A passive 2-way system with an impedance of 16 ohms, it can be driven in blocks of 1, 2, 3 or 4 resolution configuration. With a complement of 2 x 6.5" (165mm) LF drivers and a vertical column of 3 x 1.4" (35mm) aluminium dome HF drivers, the acoustic design of WPM is uniquely innovative. The LF drivers are located in the side walls of the HF horn — an arrangement which would introduce acoustic cavities which would degrade the horizontal dispersion if conventional cone drivers were used. WPM's drivers adopt an elegant solution by having solid moulded diaphragms which match the contours of the horn walls and maintain the continuity of the horn profile. Each LF driver also features a demodulation ring in the neodymium motor system to minimize distortion and maximise mid-band output.

In the triple-driver HF section, each individual HF wavefront is precisely-coupled to the horn throat via a short waveguide for faultless 100° horizontal constant directivity coverage.

Martin Audio Ltd
Century Point, Halifax Road, High Wycombe
Buckinghamshire HP12 3SL, England

Telephone: +44 (0) 1494 535 312
Email: info@martin-audio.com

MARTIN AUDIO LONDON

All information is Copyright © 2017 Martin Audio Ltd.

WPM

Optimised Line Array – Two-way, passive line array element

WAVEFRONT PRECISION

WPM – system example with variable resolution

	WPM S20 1 Box Resolution	WPM S20 2 Box Resolution	WPM S20 4 Box Resolution
Top Box	WPM	WPM	WPM
Quantity	16	16	16
Subwoofer	SX118	SX118	SX118
Quantity	4	4	4
Amp 1	iK81	iK81	iK81
Quantity	2	1	1
Amp 2*	iK42	iK42	-
Quantity	1	1	-



Martin Audio Ltd
Century Point, Halifax Road, High Wycombe
Buckinghamshire HP12 3SL, England

Telephone: +44 (0) 1494 535 312
Email: info@martin-audio.com

All information is Copyright © 2017 Martin Audio Ltd.

MARTIN AUDIO LONDON

WPM

Optimised Line Array – Two-way, passive line array element

WAVEFRONT PRECISION

Technical Specifications

TYPE	Two-way, passive line array element
FREQUENCY RESPONSE (5)	76Hz-18kHz ± 3dB
DRIVERS	
LF	2 x 6.5" (165mm) contoured-diaphragm /2" (50mm) edge-
	wound CCAW voice coil, neodymium magnet drivers, reflex
	loaded
HF	3 x 1.4" (35mm) aluminium dome /1.4" (35mm) voice coil,
	neodymium magnet compression drivers on constant-
	directivity waveguide
SYSTEM AMPLIFIER	iKON iK42, iK81
SYSTEM RESOLUTION	1 to 4 enclosures per amplifier channel
MAXIMUM SPL (9)	130dB peak (1 cabinet)
NOMINAL IMPEDANCE	16 ohms
DISPERSION	100° horizontal (-6dB), 125° horizontal (-10dB)
	10° vertical
CROSSOVER	1.2kHz passive
ENCLOSURE	Vertical trapezoid with 5° wall angle,
	Multi-laminate birch and poplar-ply construction
FINISH	Black textured paint
PROTECTIVE GRILLE	Black HEX perforated steel
CONECTORS	2 x NL4 type
PIN CONNECTIONS (INPUT)	1+/1-
FITTINGS	Integral 3-point rigging system
	2 x side pocket handles
	2 x rear grip handles
FLOWN ARRAY MAXIMUM	16 enclosures in single array
DIMENSIONS	(W) 500mm x (H) 185mm x (D) 377mm
	(W) 19.7in x (H) 7.3in x (D) 14.8in
WEIGHT	12kg (26.4lbs)
ACCESSORIES	Install flying frame
	Touring flying frame
	Flying Pin

Notes

(1) Measured on-axis in half (2pi) space at 2 metres, then referred to 1 metre.
(2) AES Standard ANSI S4.26-1984.
(3) Measured in half (2pi) space at 2 metres with 1 watt input, using band limited pink noise, then referred to 1 metre.
(4) Measured in half (2pi) space at 2 metres using band limited pink noise, then referred to 1 metre.
(5) Measured on-axis in open (4pi) space at 2 metres, then referred to 1 metre.
(6) Measured in open (4pi) space at 2 metres with 1 watt input, using band limited pink noise, then referred to 1 metre.
(7) Measured in open (4pi) space at 2 metres using band limited pink noise, then referred to 1 metre.
(8) Measured in open (4pi) space at 2 metres with 2.83v input, using band limited pink noise, then referred to 1 metre.
(9) Calculated at 1 metre.
(10) Measured in half (2pi) space at 2 metres with 2.83V input, using band limited pink noise, then referred to 1 metre.

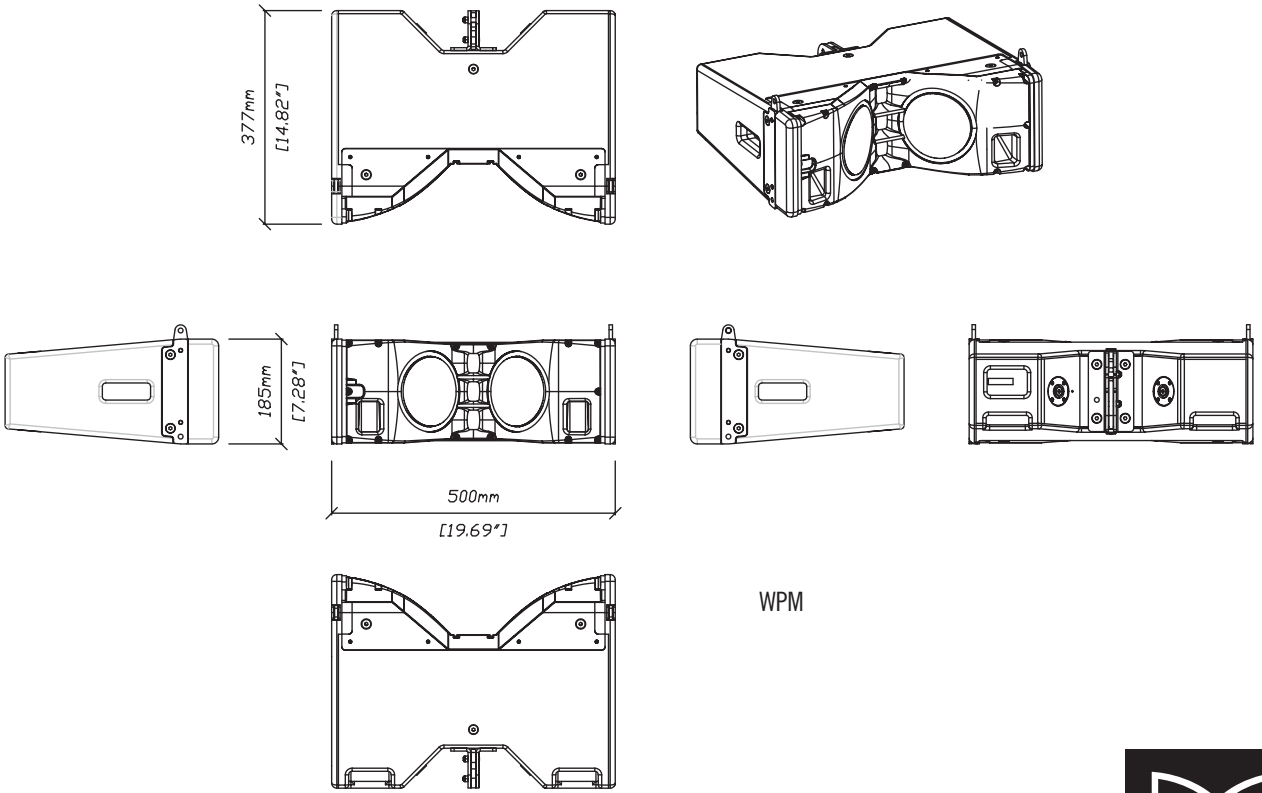

WPM

Martin Audio Ltd
Century Point, Halifax Road, High Wycombe
Buckinghamshire HP12 3SL, England

Telephone: +44 (0) 1494 535 312
Email: info@martin-audio.com

All information is Copyright © 2017 Martin Audio Ltd.

MARTIN AUDIO LONDON

www.martin-audio.com

WPM

Optimised Line Array – Two-way, passive line array element

WAVEFRONT PRECISION

Technical Specifications

SX118 Subwoofer

TYPE	Compact, direct radiating subwoofer
FREQUENCY RESPONSE (1)	47Hz – 150Hz ±3dB, -10dB @ 41Hz
DRIVER	18" (460mm)/4" (100mm) voice coil, long excursion, ferrite magnet, waterproof cone
RATED POWER (2)	1000W AES, 4000W peak
SYSTEM AMPLIFIER	iKON iK42, iK81
SENSITIVITY (10)	102dB
MAXIMUM SPL(9)	138dB peak
NOMINAL IMPEDANCE	8 ohms
DISPERSION (-6dB)	Omnidirectional/or Cardioid (paired)
ENCLOSURE	Multi-laminate birch/poplar ply
FINISH	Textured black paint
PROTECTIVE GRILLE	Black perforated steel
CONNECTORS	2 x NL4
PIN CONNECTIONS (INPUT)	LF: +1, -1 Link through: +2, -2
PINS CONNECTIONS (LINK)	LF: +1, -1 Link through: +2, -2
FITTINGS	Two skids on base, with mating channels on top
	Four rear-mounted 100mm (4in) castors
	M20 top-mounted thread plate for pole mounting
	16 x M10 mounting points
	2 x bar handles, 1 on each side
	4 x fittings for optional transit cover
DIMENSIONS (INCL SKIDS)	(W) 600mm x (H) 509mm x (D) 632mm
	(760mm including castors)
	(W) 23.62in x (H) 20.04in x (D) 24.86in
	(29.90in including castors)
WEIGHT	47kg (104lbs)
ACCESSORIES	Transit cover

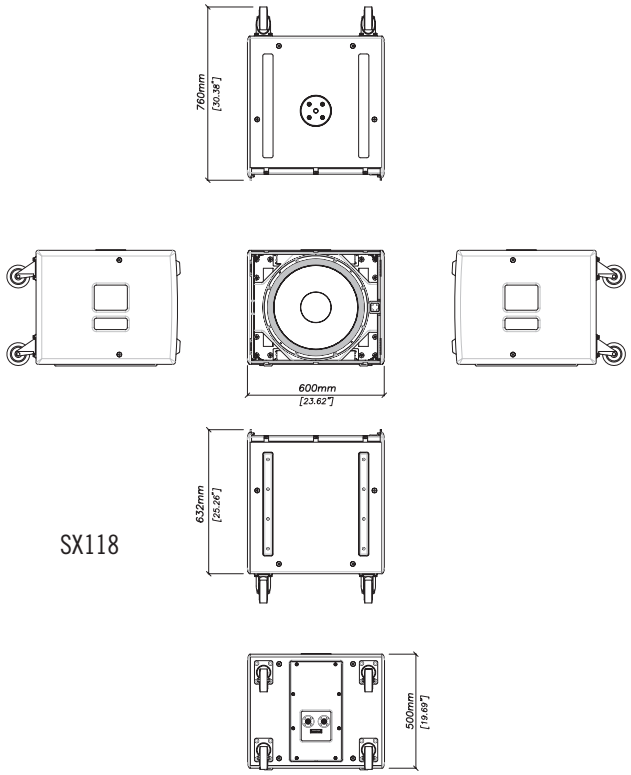

SX118

iK42 Amplifier

General	
TYPE	Four-channel Class D amplifier
TOTAL OUTPUT POWER	20,000 Watts RMS, all channels driven
DIGITAL SIGNAL PROCESSING	96kHz DSP on all inputs and outputs
COOLING	Dual vari-speed fans, front-to-back airflow
MAXIMUM AMBIENT TEMPERATURE	40°C (104°F)
Audio Inputs/Outputs	
ANALOGUE IN/LINK (4 CHANNELS)	4 x female, 4 x male Neutrik™ XLR
ANALOGUE INPUT IMPEDANCE	20kΩ balanced to ground
MAXIMUM ANALOGUE INPUT LEVEL	+20dBu
NOMINAL SYSTEM GAIN	32dB
AES3 IN/LINK (2 CHANNELS)	1 x female, 1 x male Neutrik™ XLR, balanced
DANTE™ (4 CHANNELS)	2 x shielded RJ45, primary and secondary
AMPLIFIER OUTPUTS	4 x Neutrik Speakon™ NL4
Control and Monitoring Network	
TOPOLOGY	Ethernet
CONTROL APPLICATION	Martin Audio VU-NET™
Power Supply	
TYPE	High performance Series Resonant
AC INPUT OPERATING RANGE	85 – 240V ~ AC, 47 - 63Hz
MAINS INRUSH CURRENT	6A at 15V, 12A at 230V (max for <10ms)
MAINS CONNECTOR	Neutrik 32A Powercon™
Physical	
DIMENSIONS	(W) 483 x (H) 2U/89mm x (D) 357mm
	(W) 19in x (H) 2U/3.5in x (D) 14.1in
	incl handles and optional rear support
WEIGHT	12.5kg (27.5lbs)

iK81 Amplifier

General	
TYPE	Eight-channel Class D amplifier
TOTAL OUTPUT POWER	10,000 Watts RMS, all channels driven
DIGITAL SIGNAL PROCESSING	96kHz DSP on all inputs and outputs
COOLING	Dual vari-speed fans, front-to-back airflow
MAXIMUM AMBIENT TEMPERATURE	40°C (104°F)
Audio Inputs/Outputs	
ANALOGUE IN/LINK (4 CHANNELS)	4 x female, 4 x male Neutrik™ XLR
ANALOGUE INPUT IMPEDANCE	20kΩ balanced to ground
MAXIMUM ANALOGUE INPUT LEVEL	+20dBu
NOMINAL SYSTEM GAIN	32dB
AES3 IN/LINK (2 CHANNELS)	1 x female, 1 x male Neutrik™ XLR, balanced
DANTE™ (4 CHANNELS)	2 x shielded RJ45, primary and secondary
AMPLIFIER OUTPUTS	4 x Neutrik Speakon™ NL4
Control and Monitoring Network	
TOPOLOGY	Ethernet
CONTROL APPLICATION	Martin Audio VU-NET™
Power Supply	
TYPE	High performance Series Resonant
AC INPUT OPERATING RANGE	85 – 240V ~ AC, 47 - 63Hz
MAINS INRUSH CURRENT	6A at 15V, 12A at 230V (max for <10ms)
MAINS CONNECTOR	Neutrik 32A Powercon™
Physical	
DIMENSIONS	(W) 483 x (H) 2U/89mm x (D) 357mm
	(W) 19in x (H) 2U/3.5in x (D) 14.1in
	incl handles and optional rear support
WEIGHT	12.5kg (27.5lbs)

Trade Descriptions Act
Due to Martin Audio's policy of continuing improvement, we reserve the right to alter these specifications without prior notice. Martin Audio is committed to refining state of the art sound reinforcement, combining in-depth product and field applications research with advanced manufacturing techniques. Every Martin Audio product is built to the highest manufacturing standards and rigorously tested to ensure that it meets the performance criteria specified in the design.

Martin Audio Ltd
Century Point, Halifax Road, High Wycombe
Buckinghamshire HP12 3SL, England

Telephone: +44 (0) 1494 535 312
Email: info@martin-audio.com

MARTIN AUDIO LONDON

All information is Copyright © 2017 Martin Audio Ltd.