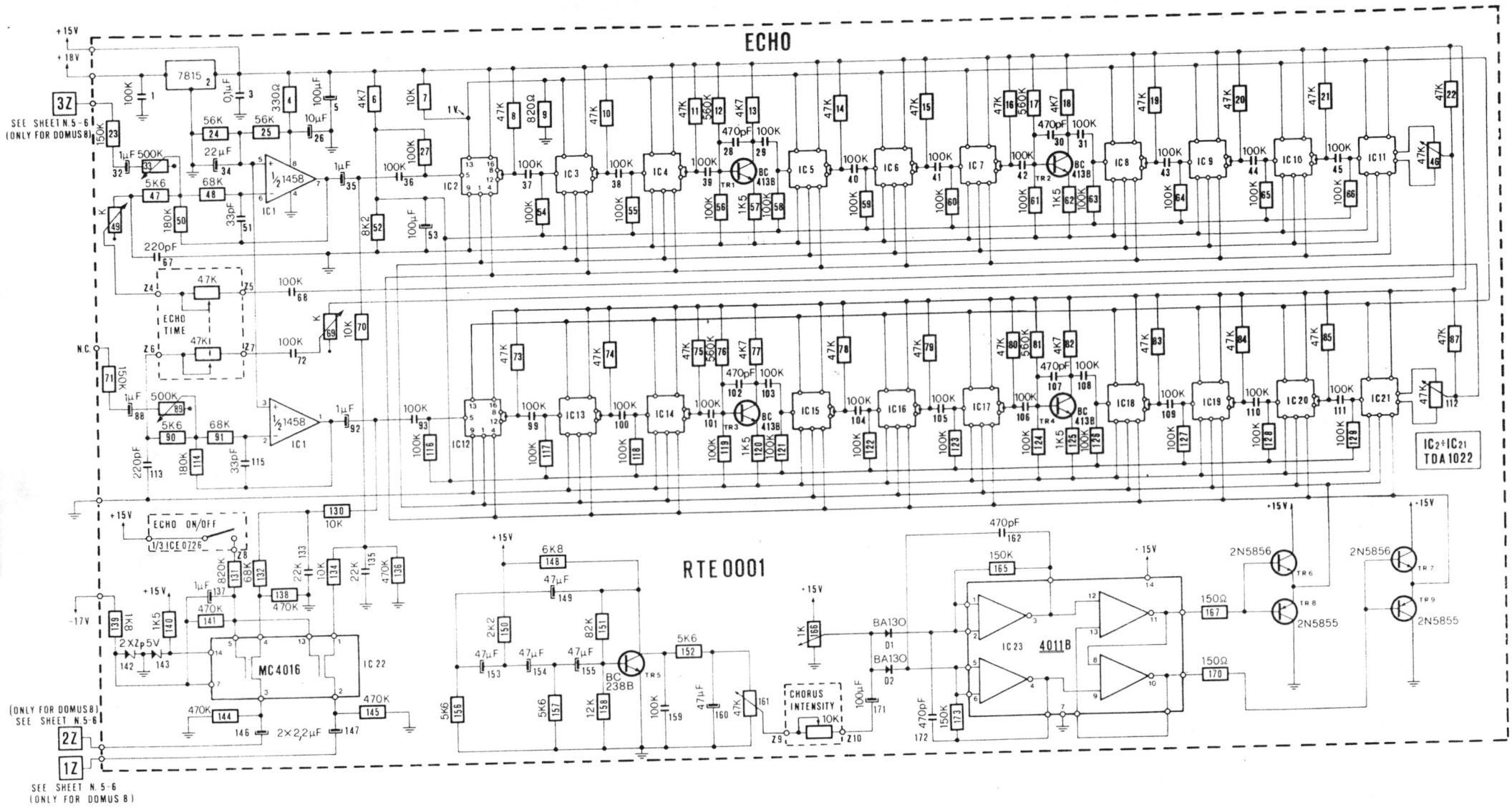

VISCOUNT ORGANS
made by:

INTERCONTINENTAL ELECTRONICS S.p.A.
P.O. Box 5
47040 MONDAINO (FO) - ITALY
Tel. (0541) 981700
Telex 550205 Inter

Domus 8
viscount®

OBJECT:
Echo

SHEET
N. 11

DATE