BLOCK DIAGRAM

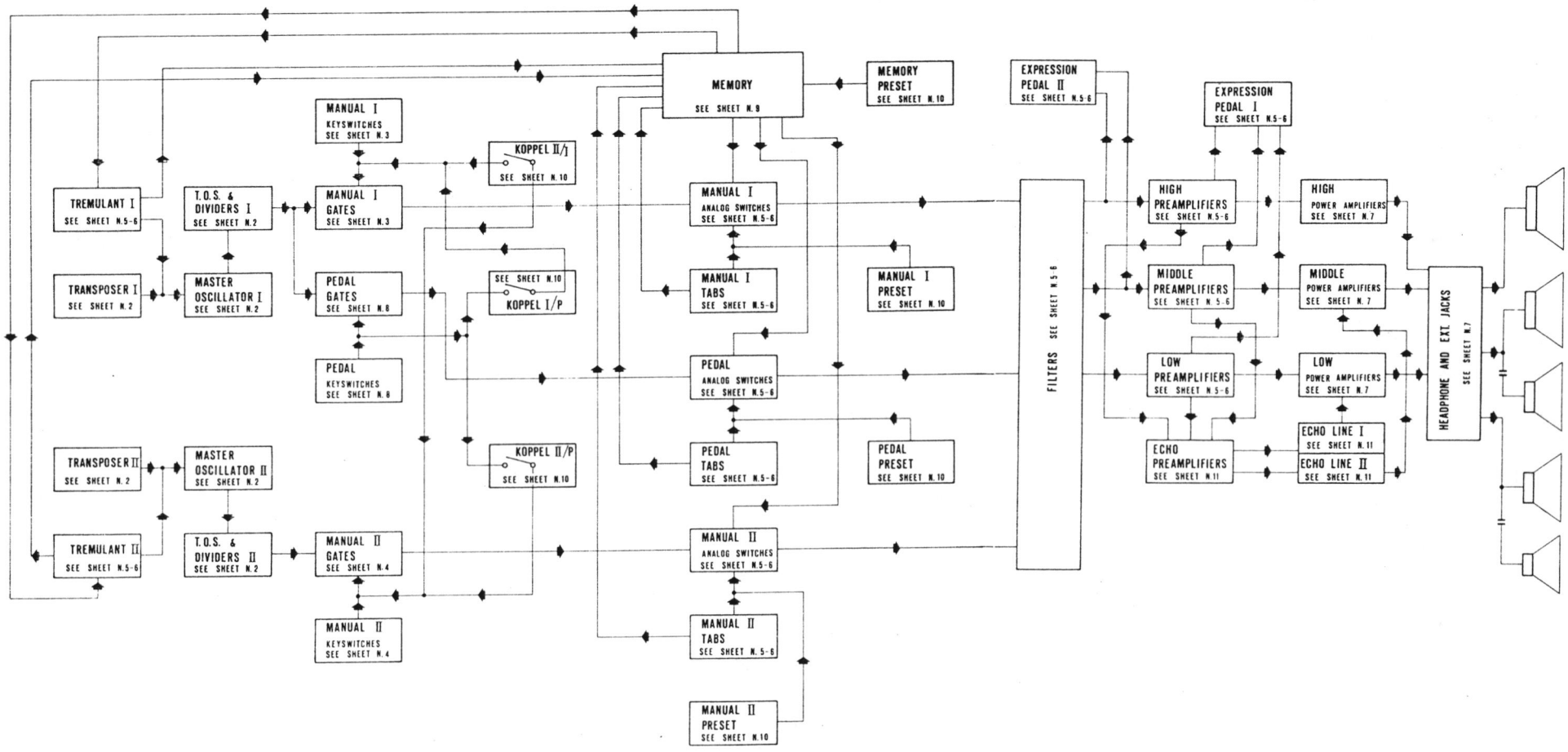

MADE BY rte

Domus 8
viscount®

OBJECT:
Block Diagram

SHEET
N. 1

DATE