Vestax

HDR-8

Operational Manual

Version 2.04 August , 1995

Vestax Musical Electronics Corporation
2870 Cordelia Road Suite 100
Fairfield, CA 94585 USA
(707) 427-1920
Fax (707) 427-2023

IMPORTANT!!!!

Please be sure to fill out and return the warranty registration card. Due to the nature of the HDR series of recorders, it may be neccesary to update the operational software to provide the user with the most current capabilities. VESTAX MUSICAL ELECTRONICS CORP. or its authrized distributor will provide registered users with software updates for a nominal charge. If you have any questions regarding the software or hardware, please contact your authrized HDR distributor or VESTAX MUSICAL ELECTRONICS CORP.

Table of contents

	Front Panel	0-3
	Rear Panel	0-6
1.	Playing The Demo Song	1
2.	Songs	2
2.1	Create A Song	3
2.2	Recalling A Song	3
2.3	Deleting A Song	3
3.	Recording	4
3.1	Protecting / Unprotecting the HD	4
3.2	Selecting The Sampling Frequency	4
3.3	Create The Song Area	4
3.4	Input Assignments	4
3.5	Basic Recording	6
3.6	Digital Input Select	7
3.7	Recording From A Digital Source	7
3.8	Recording Six Individual Source Onto Four Track	8
4.	The Digital Mixer	9
4.1	Volume	9
4.2	Pan	10
4.3	Pre EQ Level	10
4.4	Master Level	11
4.5	Equalizer	11
4.6	Auxiliary (AUX) Sends	12
5.	Mute	13
6.	Locate	14
7.	Pitch Control	15
8.	The Shuttle Function	16
9.	Functions	18
9.1	Recalling Programs	18
9.2	Save Program Function	18
9.3	The Undo Function	19
9.4	The Song Functions	20
	Creating A Song	20
	Recalling A Song	21
	Deleting A Song	21
9.5	Input Assignments	22
9.6	Sample Frequency Function	23
9.7	Sync Select Function	24
9.8	Protect / Unprotect The Hard Drive	24
9.9	Buffer Size Select Function	25
9.10	Disc Function	25

9.11 The Playlist Function....26
Reducing The Playlist....26
Deleting The Playlist....27
9.12 Auto - In Monitor Function....28
9.13 Send / Stop Sync Function....29
9.14 Auxiliary Send Function....30
10. Set A/B Position....31
11. A/B Locate....31
12. A/B Single....31
13. A/B Repeat....32
14.1 Auto Punch In / Out....33
14.2 Manual Punch In / Out....36
Editing Functions....37
15. Move....37
16. Copy....38
17. Delete....40
18. Merge....41
19. MIDI....42
Continuous Controller Assignments....43
19.1 Program Channel....44
19.2 Continuous Controller Channel....44
19.3 Synchronization Switch....45
19.4 Stripe....46
MIDI Clock....46
MIDI Time Code....47
19.5 Display Mode....48
19.6 Reference Track....49
20. Backup and Load Data....50
20.1 Backup All Data....51
20.2 Backup Song....51
20.3 Load All Data....52
20.4 load One Song....53
21. Synchronizing Two or More HDR Units....54
22. Installing a Second Hard Drive....55
23. Error Messages....56
24. Problem Chart....56

HDR-8 FRONT AND REAR PANEL

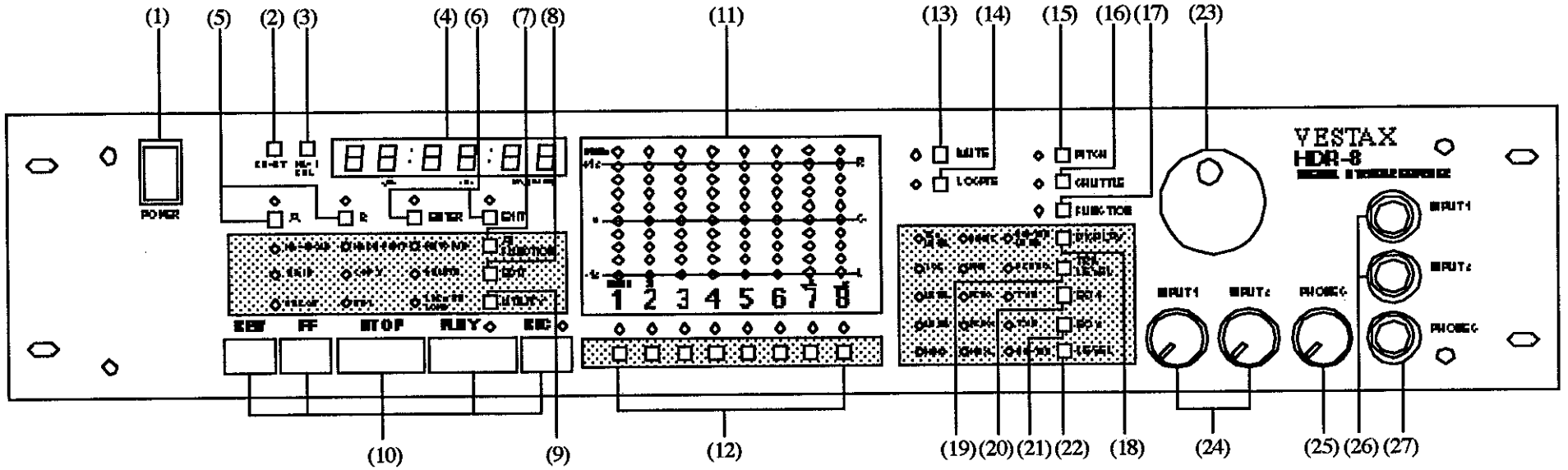

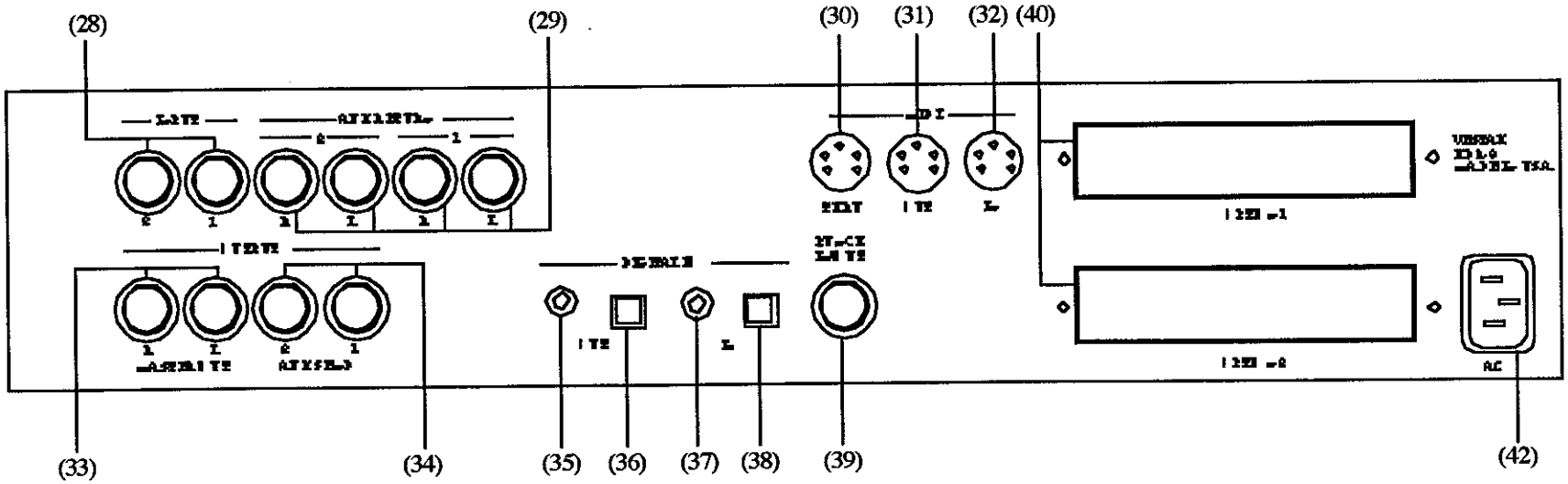

FRONT PANEL

(1) POWER SWITCH

The power switch should be in the OFF position when plugging and unplugging the power cable.

(2) RESET BUTTON

The relative counter is reset to "OO:OO:OO" by pressing this button. In the absolute mode, the counter will not change the number but still reset the relative.

(3) ABSOLUTE/RELATIVE TIME SELECT BUTTON

This button is used to select Absolute time mode "AbSolu" or Relative time mode "rELAt". Absolute time is provided as an absolute address and cannot be changed or reset. Relative time can be reset and used for MIDI or SMPTE synchronize time code.

(4) COUNTER/PARAMETER(VALUE) DISPLAY

The counter displays time, parameter values and operational descriptions.

(5) A and B BUTTONS

These buttons are used to set the A and B position and locate to the A or B position. Please refer AB set and AB locate section.

(6) ENTER and UNDO BUTTONS

The ENTER button is used to execute parameter and operational changes. The UNDO button is used to cancel operations and to exit (go out from) the last execution. The LED blinks when the selection is required.

(7) AB FUNCTION BUTTON

This button selects the AB function trom AB single, AB repeat or Auto punch in / out. Please refer to each function procedure.

(8) EDIT BUTTON

This button selects the edit mode from Move, Copy and Delete. Please refer to each edit procedure.

(9) UTILITY BUTTON

This button selects the utility mode from Merge, MIDI and Back up/Load. Please refer to each function procedure.

(10) REWIND, FAST FORWARD, STOP, PLAY, RECORD BUTTON

These transport control buttons operate the HDR series just like a tape recorder. Rewind and fast foward have 3 speeds. The speed can be changed by pressing the REW or FF buttons 2 or 3 times.

*** ZERO RETURN**

The position "00:00" can be located to by holding the STOP button and pressing REW button. The position can be located to the absolute zero or relative zero depending on the time mode selected.

(11) BARGRAPH DISPLAY METER

This bargraph displays the playback level of each track, the mixer parameter value and the master level. Please refer to DISPLAY (18).

(12) TRACK SELECT BUTTON

These buttons are used to select each track(s) for recording, mixing, editing, etc. The selected track(s) LED blinks or stays on in red while in recording mode. The LEDs appear solid green in all other modes except mute mode where the muted track LED blinks.

(13) MUTE BUTTON

This botton is used to mute each track independently. Please refer to the mute procedure.

(14) LOCATE BUTTON

This botton is used to set or go to the auto location position. Please refer to the locate procedure.

(15) PITCH BUTTON

This botton is used to change the pitch during playback or recording. To change the pitch, press PITCH and turn the Jog Dial. The pitch is displaycd on the counter by cent from +200 cents to -200 cents (+100 cents to -200 cents at 48KHz fs) and can be adjusted in 2 cent increments. Press PITCH button again to go out of pitch mode.

*** The pitch must be set to 0 when using the digital I / O.**

(16) SHUTTLE BUTTON

This botton activates the shuttle function. A 10 frame of the signal is played back in loop on shuttle. The exact position can be located by using the Jog Dial.

(17) FUNCTION BUTTON

This botton is uscd to go to the function select mode. Plcase refer to the function procedure.

(18) DISPLAY SELECT BUTTON

This botton is used to select the display mode of the bargraph meter. In the TRK LEVEL mode, the bargraph shows the playhack level of the each track. In the MIXER mode, the meter shows the mixing paramaeters selected by mixer control buttons. In the MASTER LEVEL mode, the meter shows the master levels of the AUX 1, 2 and stereo master output.

(19) TRACK LEVEL SELECT BUTTON

This botton is used to select the level parameter of the digital mixer. Please refer to the level adjust procedure.

(20) EQ 1 SELECT BUTTON

This botton is used to select the EQ 1 parameter of the digital mixer. Please refer to the EQ adjust procedure.

(21) EQ 2 SELECT BUTTON

This botton is used to select the EQ 2 parameter of the digital mixer. Please refer to the EQ adjust procedure.

(22) LEVEL SELECT BUTTON

This botton is used to select the AUX send level and Master Level of the digital mixer. Please refer to the level adjust procedure.

(23) JOG DIAL

This Jog Dial is used to select or adjust the parameter, shuttle, etc. Please refer to each function contents.

(24) INPUT VOLUME 1&2

These knobs are used to adjust the input level from the analog input jacks on the ftront panel only. The analog input from the input jacks on the rear panel and digital inputs are unaffected by these knobs.

(25) HEADPHONE VOLUME

This knob is used to adjust the headphone monitor level.

(26) INPUT JACK 1&2

These jacks are unbalanced analog inputs for microphones, instruments and any other analog source. The level from these jacks is adjusted by the Input Volume (24).

(27) HEADPHONES JACK

This jack is used to connect headphones to monitor. The headphone monitor level is adjusted by the Headphone Volume (25).

REAR PANEL

(28) LINE INPUT JACK 1&2

These jacks are balanced +4 dBm ring, tip, sleve, 1/4 inch jacks used to connect the output from the mixing console or any other line level audio source. The signal from this input bypasses the Input Volume and the input level is set to +4dBm.

(29) AUX RETURN JACK

These jacks are used to connect the output from external effect processors. Input L and R are assigned to each channel of the master buss.

(30) MIDI THRU JACK

This jack is used to connect to other MIDI instruments. The MIDI signal from MIDI IN (32) comes out this jack unchanged.

(31) MIDI OUT JACK

This jack is used to connect to the MIDI IN of a sequencer, computer, synchronizer or the other MIDI equipment. MIDI clock is output from this jack to synchronize MIDI equipment with HDR 8.

(32) MIDI IN JACK

This jack is used to connect the MIDI out of a sequencer, computer, synchronizer or other MIDI equipment. MIDI clock is input and recorded from this jack.

(33) MASTER OUT JACK L&R

These jacks are the stereo master output jacks to connect to the power amp, mixing console, mixdown tape machine, etc.

(34) AUX SEND JACK

These jacks send the AUX signal that is adjusted by AUX send level controls.

(35) COAXIAL DIGITAL OUTPUT JACK

This jack is used to connect to the digital coaxial SP/DIF output from the HDR to the input of a DAT or the other digital equipment. An RCA plug cable is used for this connection. If the DAT or digital equipment to be connected has an optical input, the optical connection is preferred.

(36) COAXIAL DIGITAL INPUT JACK

This jack is used to connect the digital coaxial SP/DIF output from a DAT or the other digital equipment to the HDR. An RCA plug cable is used for this connection. If the digital equipment to be connected has an optical output, the optical connection is preferred.

(37) OPTICAL DIGITAL OUTPUT JACK

This jack is used to connect the digital optical SP/DIF output from the HDR to the input of the DAT ot the other digital equipment. Audio-DNP type optical cable is used for the connection.

(38) OPTICAL DIGITAL INPUT JACK

This jack is used to connect the digital optical SP/DIF output from a DAT or other digital equipments to the input of the HDR. Audio-DNP type optical cable is used for this connection.

(39) PUNCH IN/OUT FOOTSWITCH JACK

This jack is used to connect a footswitch for manual punch in and out. Any type of the momentary footswitch with the contacts normally open, can be used.

(40) OPTION SLOT 1 & 2

These slots are for the optional boards. Optional boards for the HDR series can be installed by removing the blank panel and installing the optional board in accordance with its instructions.

*** Installation of an Optional board is to be performed by authorized Vestax HDR dealer. Vestax is not responsible for any injury to the user or damage to the unit by opening of the top cover by an unauthorized person.**

(41) FUSE HOLDER

Standard slow blow 1/4 x I-1/4 fuse is used. Please refer to the following table for the current rating.

AC voltage	current rating
120V	1.5 A
100V	1.5 A
220-240V	0.75 A

(42) AC INLET

Please use the included AC cable. Vestax will not be responsible for any damage caused by using a differant AC cable or by connecting to the incorrect voltage.

1. Playing The Demo Song

We have included a demo song on your HDR to help you become familiar with the operation of the unit. We recommend you practice using the volume and panning controls while playing back the demo song.

1. Connect the AC cord to the back of the HDR.

2. Connect the MASTER OUTS on the rear of the HDR to the inputs of your monitor system.

3. Plug the AC cord into a wall outlet. Turn the HDR on. The display will show HDR-8, the software version presently installed, and the current position -- "00:00".

4. Press the PLAY button. The demo song begins to play. It can be monitored through headphones plugged into the HEADPHONE jack on the front panel, or through the monitor system you connected in step two.

5. Press the Mute button. The MUTE light comes on and the track select lights come on. Pressing a track select button will mute that track. The light above the track select button blinks to indicate the track is muted. A solid green light means the track is not muted. If any tracks are muted, the Mute light will blink to remind you of this.

6. Now try changing the volume of the tracks. Press the LEVEL button until the VOL LED is on. Press the DISPLAY button until the MIXER LED is on. The bargraph displays the relative volume of each track and the display shows a value between 0 and -63.5, or OFF. Use the Jog Dial to change the volume.

After you have made some changes to the volume and mute parameters, we will save them to a new PROGRAM number.

1. Press the FUNCTION button until the display shows "SAV 1".

2. Use the Jog Dial to change the display to read "SAV 10".

3. Press the ENTER button. The display shows "donE".

4. Press the PLAY button. Press the FUNCTION button until "PRO 10" is shown in the display.

5. Use the Jog Dial to change the display to "PRO 1". Press the ENTER button. This instantly sets the mixer controls back to the values stored in "PRO 1".

2. Songs

The create song function gives each song a unique number and defines a section of the HD for recording. When a song is created, it becomes the current song. Each song is independent of the other songs and editing one song does not affect any other song.

The relative zero point, AB points, and 8 locate positions are stored with each song. The 128 mix programs are saved and recalled separately from the songs.

Songs can be backed up and loaded individually using the Backup Song and Load Song functions. This mode only saves and recalls the audio files. It does not back up or load the files containing the locate, AB, relative zero, or mix programs.

The Backup All and Load All functions back up and load all of the files on the hard disk.

The Song Mode Has The Following Functions:

1. **Create Song**
   Designates a section of the hard disk for recording a song. This is where the song length and song number are set.

2. **Recall Song**
   This function recalls a specified song from the hard disk and makes it the current song. Only one song can be the current song.

3. **Delete Song**
   This function deletes the information that was saved when a song is created. This function does not delete the audio files. Erasing the audio files is a separate operation.

First Things First -- Functions and the Exit Button

Pressing the Function button prepares the HDR to receive your instructions. The status light above the Exit button begins to blink. Pressing the Exit button cancels the operation. If you aren't sure or change your mind about a function, press the Exit button.

<u>Notes:</u> If the display shows "no Fit", then one or more songs must be deleted to make room for the new song.

The song length can't be changed after recording. When entering the length of the song, allow for extra time. This will let you add to the end of the song if you decide it should be longer. In case the song must be made longer after recording has started, it can be done by backing up the song and then loading it into a song that has been created that is longer.

2.1 Creating A Song

1. To create a song, press the FUNCTION button until "Song X" is displayed. Press the ENTER button to confirm "song" as your selection.

2. Turn the Jog Dial until "crEAte" is displayed and press the ENTER button to confirm your selection.

3. The display shows "Song X". Turn the Jog Dial to select a song number and press the ENTER button to confirm your selection.

4. The HDR will then prompt you for the length of the song. Turning the Jog Dial allows you to specify the length of your song. Song length is displayed as "XX" minutes, "XX" seconds, and "XX" frames.

2.2 Recalling A Song

1. To recall a song, press the function button until "Song xx" is displayed. Press the enter button.

2. The display reads "recall". Press the ENTER button.

3. Select the song number with the Jog Dial. Press the ENTER button.

4. The display reads "busy", then "done".

2.3 Deleting A Song

When a song is created, it defines a section of the HD to be used only by that song. When a song is deleted, the data that defined the song length and song number on the HD is deleted. A song can't be recalled after it has been deleted, so be sure this is what you want to do. Deleting a song does not delete or erase the eight audio tracks of the song. The audio tracks must be erased in a separate operation.

1. To delete a song, press the function button until "Song xx" is displayed. Press the ENTER button.

2. Select "delete" with the Jog Dial and press the ENTER button.

3. Use the Jog Dial dial to select the song to be deleted. Press the ENTER button.

4. The display will read "sure". If you are sure this is the correct song, press the enter button. If you are not sure, press the exit button.

5. If you pressed the ENTER button, the display will show "busy" to "done".

3. Recording

3.1 Protecting / Unprotecting the HD

To record on the HDR the HD must be in the unprotected mode. To unprotect the hard drive, press the function button until "Protct" is displayed. Use the Jog Dial to select "noProt", then press the ENTER button to confirm your selection. Every time the HDR is turned on, the protected mode is automatically selected.

3.2 Selecting The Sampling Frequency

1. Press the FUNCTION button until "FS32", "FS441", or "FS48" is shown in the display.

2. Select the desired sampling frequency with the Jog Dial.

3. Press the ENTER button to confirm your selection.

Note: We recommend that you decide on a sampling frequency and use it on all your projects. Using different sampling frequencies in the same song will cause your tracks to be out of sync and not in tune with each other.

3.3 Create The Song Area

See section **2-1**.

3.4 Input Assignments

When recording on a multitrack unit, it is necessary to assign the input source to the track or tracks where you want it to be recorded. On the HDR, this is done with the Input Assign function. The function routes the audio from one or more inputs, to one or more tracks. There are four options in the Assign Inputs function.(See section **9.5**.)

1. Press the FUNCTION button until " In 12 Lr" is displayed.

2. Use the Jog Dial to select the proper assignment mode.

3. Press ENTER to confirm your selection.

3.4 Input Assignments cont.

To begin the basic recording procedure, make sure the Input Assign function has "In 12 LR" selected. This will assign what is connected to Input 1 to the lowest selected track number. If recording two sources, connect the second source to Input 2. This input will be routed to the next highest selected track.

Notes: Tracks are selected by pressing the button underneath the desired track.
Be sure that the tracks being recorded are not muted. A track which is muted while recording receives no signal. This Record/Mute feature is useful when wanting to erase a group of tracks.

3.5 Basic Recording

1. Connect the instrument, microphone, CD player, etc. to the input jacks on the front panel. These front panel inputs have an adjustable level control. They can accept any level from -50 dB to 0 db.

   The input jacks on the rear panel are designed only for line level sources, such as a mixing console. The level is set to +4 dB and is not adjustable. The inputs can receive an unbalanced or balanced signal. Balanced signals can be received by using a stereo (TRS) 1/4 plug (Tip-Hot, Ring-Cold, Sleeve-Ground). Both front and rear inputs can be used simultaneously. Signals from the front and rear inputs are assigned to the same track. For example, input 1 from the front panel and input 1 from the rear panel will be assigned to the same track. Likewise, input 2 from front panel and input 2 from the rear panel will both be assigned to the same track.

2. Assign the inputs to the appropriate track, using the INPUT ASSIGN function. For basic recording using the analog inputs only, select " IN 12 Lr". For many users this in the only setting they ever use.

3. Select the track for recording by pressing the track select button. The LED for the selected track begins to blink.

4. The bargraph meter shows the level of the signal about to be recorded. Adjust the level from either the front panel INPUT control, or from the external mixing console if the rear panel input is being used. The level should meter between the 0 and +12 lines on the bargraph. If the PEAK LED lights, the level is too high and distortion may occur. Decrease the level if the PEAK LED comes on.

5. To begin recording hold the REC button and press the PLAY button. The signal can be monitored through either the HEADPHONE jack, or through the monitor system.

6. Press the STOP button when finished recording.

7. To rewind to the beginning of the song, press the STOP and REW buttons at the same time.

8. Press the PLAY button to begin playback.

3.6 Digital Input Select

When a digital input is used, the HDR determines which type of interface is being used -- coaxial or optical -- and automatically selects it.

3.7 Recording From A Digital Source

Two tracks of digital audio can be recorded on the HDR. Both coaxial and optical interfaces are included on the HDR, and if available on the source unit, the optical interface is preferred.

Note: If a digital input is connected from a DAT recorder, and the DAT recorder is in record or record pause mode, the sampling clock of the HDR will be synchronized to the sampling clock of the DAT. This is also true when other digital equipment is set up in the same way. Therefore, the SAMPLING FREQUENCY and PITCH functions can not be selected.

1. Connect the digital output of the DAT recorder to the digital input on the HDR. When recording digital signals it is not necessary to set record levels.

2. Press the FUNCTION button until "Sy-Int" (sync internal) is displayed. Use the Jog Dial to select "Sy-din" (sync digital in) is displayed. Press the ENTER button.

3. Set the input assignments to "LR12". Please refer to section **9.5**.

4. Press and hold RECORD and then press PLAY.

5. Press STOP to end recording.

3.8 Recording Six Individual Sources Onto Four Tracks

By using the four analog inputs and the digital input, it is possible to record up to six different sources onto four tracks of the HDR.

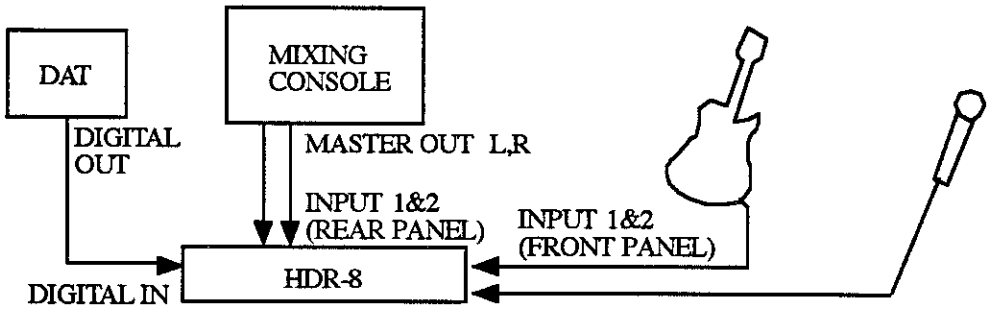

1. Connect the input sources you wish to use. They can be some or all of the components shown in the diagram above.

2. If using the DAT recorder, place it in Record Ready mode. The signal will be passed from the analog inputs to the digital output.

3. Press the FUNCTION button on the HDR until "Syn-Int" is displayed. Use the Jog Dial to select "Syn-din". Press ENTER to confirm your selection.

4. Set the track assignments as described in section **3.4**.

5. Select the tracks for recording with the track select buttons.

6. Press and hold RECORD and press PLAY to begin recording.

7. Press STOP to end the recording.

4. The Digital Mixer

The digital mixer in the HDR is used to control the volume, pre-EQ level, pan, EQ settings, auxiliary send level, master level , and the mute status of each track. Each mix control has a value, which is set using the Jog Dial. For example, the volume control of track 1 has a range of 0.00 to -63.5, and OFF. The value 0.00 represents no attenuation. Attenuation means reduction. So if the value is set to 0.00, track 1 will playback at full volume. As you turn the Jog Dial counter-clockwise you increase the amount of attenuation. Increasing the amount of attenuation turns the volume down. When set to off, track 1 playback is turned off. Mixer settings can be saved and recalled. (See section **9.1**)

The DISPLAY button, in the upper right corner of the mixer panel, allows you to quickly view all of the mixer settings. When mixer settings are being adjusted, pressing the display button switches between three different views.

Track Level View displays the track playback level of the six individual tracks.

Master Level View displays the output level of the L/R master buss, and the master send level of each of the auxiliary sends.

Mixer View displays the values of the mixer settings.

4.1 Volume

1. Press the LEVEL button until the VOL (volume) LED is on. The bargraph shows the values for each track and the counter shows the values of the selected track.

2. Select a track. The track LED comes on. The value of the VOL setting is shown in the counter window. The value can be set from 0 to -63.5 and OFF.

3. Use the Jog Dial to adjust the level.

Note: At this point you may select another mixer function to adjust. All mixer controls are adjusted by the procedure described above.

4. Press the EXIT button to leave mixer mode.

4.2 Pan

The Pan control determines where the track will be placed in the stereo field. The track can be placed in the left or right speaker only, or at a location somewhere in-between.

1. Press the LEVEL button until the PAN LED is on. The bargraph shows the values for each track and the counter shows the values of the selected track.

2. Select a track. The Track LED comes on. The value of the Pan setting is shown in the counter window. The value can be set from L 100%, to R100%.

3. Use the Jog Dial to adjust the pan.

Note: At this point you may select another mixer function to adjust. All mixer controls are adjusted by the procedure described above.

4. Press the EXIT button to leave mixer mode.

4.3 Pre EQ Level

The PRE EQ LEVEL adjustment is used to decrease the TRACK LEVEL when it has been boosted by the EQ settings. The Peak LED will light when this happens. If the signal exceeded the peak level during the recording, adjusting the PRE EQ LEVEL does not eliminate the distortion. If no tracks are peaking, the PRE EQ LEVEL should be set at the 0 dB level.

1. Press the LEVEL button until the PRE EQ LED is on.

2. Select the track to be adjusted.

3. Use the Jog Dial to adjust the level.

4. Press the EXIT button to leave mix mode.

4.4 Master Level

1. Press the LEVEL button until the MASTER LED is on. Pressing track select buttons 1 and 2 will select and show the value of the master auxiliary sends in the counter display. Pressing track select buttons 5 and 6 will select and show the values of the Left and Right master buss in the counter display.

2. When a selected value is shown in the display, it can be adjusted with the Jog Dial.

3. Press the EXIT button to leave mix mode.

4.5 Equalizer (EQ)

Each of the tracks on the HDR has two independent equalizers. The types of EQ available on each equalizer are: high or low shelving with adjustable (sweep) frequency, and 12 db of boost or cut in 1/10 of db steps; and a parametric equalizer. The parametric EQ offers 12 db of cut or boost, continuously variable Q, and continuously variable frequency, ranging from 39 Hz to 12kHz.

Notes: Q refers to how broad or narrow the sharpness of the bell curve is. A lower setting indicates a sharper setting, while a higher setting indicates a broader setting. A lower Q setting is useful for adjusting a narrow range of frequencies. Example: To decrease the level of a kick drum on an a pre-mixed drum track; locate the frequency of the kick drum, select a low Q (bell) value, decrease the EQ LEVEL until the desired mix is heard. A higher Q setting is useful for adjusting a wider group of frequencies. To bring backgrounds vocals out in a mix, try a higher Q setting, set the frequency in the 2 to 6kHz range and increase the EQ LEVEL.

1. Select the track to be adjusted. Press the EQ 1or 2 button to select the equalizer to be adjusted.

2. Press the EQ button until the desired EQ function LED is on. Use the Jog Dial to adjust the values. If necessary, save the new EQ settings in a new program location.

3. Press the EXIT button to leave mix mode.

Note: A clicking or popping noise will be generated if the EQ is adjusted while playing back. When boosting the level of the EQ control, it is possible to exceed the peak level. This will cause distortion. If this occurs, you can decrease the PRE EQ LEVEL to compensate for the boost.

4.6 Auxiliary (AUX) Sends

Auxiliary sends are used to route individual tracks to effects units. This allows you to apply different kinds of effects and/or different amounts of the same effect to different tracks. The most common effects are reverb and delay.

For example, you have a lead vocal recorded on track 1, and the background vocals are on tracks 2 and 3. The input to the reverb unit is patched to AUX SEND 1. The outputs form the reverb unit are patched to AUX Return 1. Our goal is to hear the background vocals with more reverb than the lead vocal. The AUX SEND function of each track controls how much of each track is sent to the effects. In our example, the solution would be to set the AUX SEND 1 level of tracks 2 and 3, higher than the AUX SEND level of track 1.

Notes: The outputs from the reverb unit are patched into AUX Return 1, L/R. What is patched into the AUX Returns is automatically routed the main L/R outputs.

If your effect unit has only one output and you wish to hear it in both the left and right sides of the mix, use a y-cable to patch the output into both the L and R returns.

There is an additional AUX SEND setting in the FUNCTION procedures. For a discussion of Pre/Post AUX sends, see section **9.14**.

1. Press the AUX button until the desired AUX SEND LED is on. For example, you may have a reverb unit on AUX SEND 1, and a delay unit on AUX SEND 2. Select AUX 1 to send to the reverb unit. The bargraph shows the values for each track and the counter shows the values of the selected track.

2. Select a track.

3. Use the Jog Dial to set the level of the AUX SEND.

4. Press the EXIT button to leave the mix mode.

5. Mute

When a track is muted its playback is turned off. This can be very useful if you need to monitor a specific group of tracks. For example, to hear only the vocals , mute all of the instrument tracks.

1. Press the MUTE button. The MUTE LED and the TRACK SELECT LEDs come on.

2. When a TRACK SELECT button is solid green, it is not muted Pressing a TRACK SELECT button will mute the track and cause the LED to flash. Pressing it again will unmute the track.

3. Press the MUTE button to leave MUTE mode. If no tracks are muted, the MUTE LED turns off. If a track is muted, the MUTE LED will flash.

6. LOCATE

The Locate Function

One of the advantages of hard disk recording is that you have almost instant access to any location in your song. A thorough understanding of how to mark and move to sections of your song will make overdubbing and editing much easier. Locator markers are also useful for setting a pre-roll time. When you set a pre-roll time, you are starting playback a little farther back in the song, in order to hear / record the section you are working on in context with the rest of the song.

Setting and Recalling Markers

To place location markers in a song, press the ENTER button. The A and B buttons, LOCATE button, and EXIT button lights start to blink. Pressing the EXIT button will cancel the LOCATE mode. Any time the HDR is not already performing another function, pressing the ENTER button takes you to LOCATE mode.

Setting Locate Markers

To set a Location marker, go to the point in the song you wish to mark. One way to do this is to press play, then press stop when you find the point you are looking for. Now we are ready to set and store the marker.

1. Press the ENTER button.

2. Press the LOCATE button.

3. The display reads "loca xx". "Loca" means locator and "xx" is asking you into which of the eight locator positions do you want to store this marker. Turn the Jog Dial to make your selection. Press the LOCATE button to confirm your selection. The marker is now stored as LOCATE "xx".

Recalling Location Markers

1. Press the LOCATE button.

2. The display shows "Loca xx".

3. Turn the Jog Dial until the location number you wish to recall is displayed. Press the LOCATE button. The display shows the position of the marker you just recalled. Pressing the play button starts play back from that position. To hear the song again from that location, press the LOCATE button twice, then press play.

7. Pitch Control

Pressing the PITCH button allows you to adjust the pitch of the tracks being played back. For example, this allows you to fine tune a piano you are recording, to your already existing tracks. This is done by adjusting the pitch of the existing tracks to be in tune with the piano. You are in a sense, "tuning the piano".

.

1. Press the PITCH button. The PITCH LED comes on and the value currently selected is shown in the counter window. The value is shown in cents.

2. Adjust the pitch value by turning the Jog Dial. The pitch can be change from - 200 cents to + 200 cents (-200 cents to +100 cents at 48KHz sampling rate) in 2 cent increments.

3. Press the PITCH button again to leave pitch mode. The pitch LED goes off.

Notes: When recording from a digital source, the PITCH function is inactive. In this situation, the HDR is set to "Syn-din" in order to correctly record the digital source.

When mixing down to a DAT recorder or other digital recorders, the PITCH mode must be turned off. Most DAT recorders have fixed sample rates and can't record at sample rates other than the fixed rates. If you want to record to DAT with the pitch function engaged, use the Master L/R outputs.

8. The Shuttle Function

There will be situations when you need to set A/B markers very precisely. For example, you've just recorded a once in a lifetime solo. Its exactly what you wanted, except for some extraneous noise after the last note. How do you get rid of it ? There are a few different methods you could use. You could do the whole solo again. You could fix it in the mix. Or maybe just erase the offensive noise with pinpoint accuracy using the A/B buttons , the shuttle function, and auto punch in/out. Using the shuttle function allows for the entering of markers at very precise points. The area between the A/B markers can be moved, copied, erased or deleted. In our example, the offensive noise could be erased without risking destruction of the solo.

Becoming proficient with the shuttle function will take some practice. After you have mastered it, you will be amazed at its capabilities. Locating the exact point in your song to place A/B markers is the key to creative editing. This is the digital equivalent of splicing analog tape. Splicing analog tape has contributed to many great records. Not only is it a technical procedure, but an artistic one as well. Don't be frustrated if your first attempts don't sound like you had expected. Be patient and experiment. Don't wait until you're in the heat of a session to learn how to set markers with the help of the shuttle function. The shuttle function, A/B buttons and the Locate buttons make working with the HDR very rewarding.

1. The shuttle function is engaged by pressing the SHUTTLE button while the HDR is stopped, playing , rewinding, or fast forwarding. The output of the HDR will be muted for a second, then a section of the song will begin to play continuously. What you hear may sound strange or nonsensical. However, after practicing with the shuttle function you will be able identify what you are hearing very quickly. By turning the Jog Dial dial you are playing back a different segment of your song. These segments are very small.

Hint: Following our example above, if you can clearly hear and identify the offensive noise, the A marker position is very close.

2. Store the location in the A button locator.(See section **10**.)

3. The shuttle function remains selected. Use the Jog Dial wheel to move to the end of the noise to be deleted. Press the ENTER button, then the B button. Press the SHUTTLE button to leave the shuttle function.

4. The noise to be removed has been marked with the A/B buttons. To hear what you have marked, press the A/B Function button until A/B single is selected. Then press the Enter button. The marked section will playback one time. To hear it again press the ENTER button again. Press the EXIT button when you are done listening to the section.

8. Shuttle cont.

5. You may want to adjust the A/B markers to select the exact position of the noise. Repeat steps 1-4 until you have selected the exact area. Now that the A/B markers are set, you have the choice of using the edit/delete function, or the auto punch-in/out function to remove the noise.

Hint: Using the auto punch-in/out function, allows you to erase the noise and continue recording without reducing the play list. (See Reducing the Playlist -- Destructive and Nondestructive editing, section **9.11**)

9. Functions

9.1 Recalling Programs

The mixer settings and mute status of each track can be saved as a program. There are 128 programs. Each song has access to any of the 128 programs.

Note: The A/B points, and the eight locate points are stored as part of the individual songs -- not as part of a program.

1. Press the FUNCTION button until "PRO X" is displayed.

2. Use the Jog Dial to select the desired program number. (1 -128)

3. Pressing the ENTER button instantly recalls the program.

Note: Although you can recall different programs while the song is playing, recalling programs with different EQ settings will cause a popping sound. This can be avoided by changing programs when the track(s) with the EQ changes are muted.

9.2 Save Program Function

This function is used for saving the programs into one of the 128 program locations. All mixer settings are saved for later recall.

1. Press the FUNCTION button until "SAV X" is displayed.

2. Select the program memory number using the Jog Dial.

3. Press the ENTER button to save the program.

Recalling Programs By MIDI

The programs can also be recalled by sending the HDR a MIDI program change message on the correct MIDI channel. This is a very powerful feature, allowing for "snapshot" automation of you mixes when using a MIDI sequencer.

Connect the MIDI Out of the unit sending the program change to the MIDI in on the HDR. Set the program Channel of the HDR to the same channel number as the unit is sending on. (See section **19.1**)

When a program change message is received by the HDR, the appropriate program will instantly be recalled.

9.3 The Undo Function

The Undo function is used when you have made a mistake during an edit function. If a Move, Copy, or Delete operation did not turn out like you wanted it to, use the Undo function. Only the last edit can be undone.

1. Press the FUNCTION button until "UNDO" is displayed. Press the ENTER button.

2. The display shows "PLyL St". Press the ENTER button.

3. The counter shows "SurE". If you are sure press the ENTER button. If you are not sure, press the EXIT button.

9.4 Song Functions

The Song Mode Has The Following Functions:

1. **Create Song**
   Designates a section of the hard disk for recording a song. This is where the song length and song number are set.

2. **Recall Song**
   This function recalls a specified song from the hard disk and makes it the current song.

3. **Delete Song**
   This function deletes the information that was saved when a song is created. This function does not delete the audio files. The audio files must be erased in a seperate operation.

Creating A Song

1. To create a song, press the FUNCTION button until "Song X" is displayed. Press the ENTER button to confirm "song" as your selection.

2. Turn the Jog Dial until "crEAte" is displayed and press the ENTER button to confirm your selection.

3. The display shows "Song X". Turn the Jog Dial to select a song number and press the ENTER button to confirm your selection.

4. The HDR will then prompt you for the length of the song. Turn the Jog Dial to specify the length of your song. Song length is displayed as "XX" minutes, "XX" seconds, and "XX" frames.

Notes: If the display shows "no Fit", then one or more songs must be deleted to make room for the new song.

The song length can't be changed after recording. When entering the length of the song, allow for extra time. This will let you add to the end of the song if you decide it should be longer. In case the song must be made longer after recording has started, it can be done by backing up the song and then loading it into a song with a longer length.

Recalling A Song

A song recalled from the hard disk replaces the current song.

1. To recall a song, press the FUNCTION button until "Song XX" is displayed. Press theENTER button.

2. The display shows "recall". Press the ENTER button.

3. Select the song number with the Jog Dial dial. Press the ENTER button.

4. The display reads "busy", then "done".

Deleting A Song

When a song is created, it defines a section of the HD to be used only by that song. When a song is deleted, the data that defined the song length and song number on the HD is deleted. A song can't be recalled after it has been deleted, so be sure this is what you want to do. Deleting a song does not erase the six audio tracks of the song. The audio tracks must be erased in a separate operation.

1. Press the function button until "Song XX" is displayed. Press the ENTER button.

2. Select "delete" with the Jog Dial and press the ENTER button.

3. Use the Jog Dial to select the song to be deleted. Press the ENTER button.

4. The display will read "sure". If you are sure this is the correct song, press the ENTER button. If you are not sure, press the EXIT button.

5. If you pressed the ENTER button, the display will show "busy" to "done".

9.5 Input Assignments

When recording on a multitrack unit, it is necessary to assign the input source to the track where you want it to be recorded. On the HDR, this is done with the Input Assign function. This function routes the audio from one or more inputs, to one or more tracks. There are four options in the Assign Inputs function.

Note: Actually there are eight options. The second four will be used with an optional analog input card. (Details to be announced.)

1. Press the FUNCTION button and turn the Jog Dial until " In 12 Lr" is displayed.

The display is showing which input will go to which track. The tracks receive signals in ascending order. In other words, the lowest numbered track selected for recording will receive a signal first, and the highest numbered track last. The numbers and letters in the track assignment display refer the inputs on the HDR.

The "1" refers to the inputs labeled Input 1, on the front and rear panels. The "2" refers to the inputs labeled Input 2, on the front and rear panels.

The letter "L" refers to the signal present at the left side of the digital input. The letter "r" refers to the signal on the right side of the digital input.

Since these signals are assigned for recording from the lowest track to the highest track, you can determine which input signal is routed to which track. For example, if "In Lr 12" is selected, the signal on the left side of the digital input will be assigned to the lowest track selected for recording. The signal on the right side of the digital input will be assigned to the next lowest track. The signal present at Input 1 (front and/or rear) will be assigned to the next lowest track, and the signal present at Input 2 (front and/or rear) will be assigned to the highest numbered track selected for recording.

2. Use the Jog Dial to select the desired assignment mode.

3. Press ENTER to confirm your selection.

9.6 Sample Frequency Function

This function is used to set the sample frequency the HDR uses for recording. For direct digital to digital recording, such as producing a CD master, the sample frequency should be set to "FS441". Using this sampling frequency will make any sample rate conversion unnecessary. For higher sample resolution set the frequency to "FS48".

1. Press the FUNCTION button until "FS32", "FS441", or "FS48" is shown in the display.

2. Select the desired sampling frequency with the Jog Dial.

3. Press the ENTER button to confirm your selection.

Note: We recommend that you decide on a sampling frequency and use it on all your projects. Using different sampling frequencies in the same song will cause your tracks to be out of sync and not in tune with each other.

9.7 Sync Select Function

Use this function to record digitally from DAT recorder or to use the DAT recorder as an A/D front end.

When the HDR is set to "Syn-din" and a digital signal is present at either optical (preferred) or coaxial input, it will automatically select the correct sample frequency. When two or more HDRs are synchronized, all slave units must be set to "SLAvE" (slave).

1. Press the FUNCTION button until "Syn-Int" is displayed.

2. Use the Jog Dial to select "SYN-din" (for DAT s etc.) or "SLAvE" (for synchronizing multiple HDRs). The "no din" (no digital in) message is displayed about a half of a second while the HDR-8 is looking for the digital clock from optical and coaxial digital input, then the counters shows the time code.

3. Press the ENTER button to complete the change.

Note: If no digital signal is present, the display stays "no din" (no digital in). Make the necessary connection from the DAT recorder's digital out to the HDR's digital in using the optical (preferred) or coaxial input.

9.8 Protect / Unprotecting The Hard Drive

To record on the HDR the hard drive must be in the unprotected mode.

Every time the HDR is turned on, the protected mode is automatically selected.

1. Press the Function button until "Protct" is displayed.

2. Use the Jog Dial to select "noProt".

3. Press the ENTER button to confirm your selection.

4. The displays shows "done" then the current position.

9.9 Buffer Size Select Function

Use this function to change the size of the temporary memory buffer. The temporary memory buffer is used to store the audio data recorded during a punch in/out operation. If the punched section is longer than 30 seconds, the buffer size will need to be increased accordingly.

1. Press the FUNCTION button until "buF 30" is displayed.

2. Use the Jog Dial to select the appropriate amount of time required. For example, if the punched section is 2 minutes long, then adjust the display to read "buF 120".

3. Press the ENTER button to write the change to memory. The display shows "donE".

9.10 Disc Function

This function formats the hard drive(s).

CAUTION: FORMATTING A HARD DRIVE WILL ERASE ALL OF THE INFORMATION ON THE DRIVE.

Formatting the hard drive takes considerable time. For example, formatting a 540Mb drive with a 12ms access time, takes about 45 minutes. The time it takes to format a hard drive depends on the size and access time of the drive.

1. Press the FUNCTION button until "diSc" is displayed. Press the ENTER button.

2. The display shows "FornAT" (format). Press the ENTER button.

3. The display shows "drivE 1". If two hard drives are installed, use the Jog Dial to select the drive to format. When the correct drive is shown, press the ENTER button.

4. The display shows "SurE". If you are sure, press the ENTER button.

5. The display shows "PoStvE" (positive). If you are positive, press the ENTER button.

6. The formatting process begins and the display shows "CY XXX" and begins to count down to "CY 0".

9.11 The Playlist Function

1. Reducing The Playlist

When editing a track, you are instructing the HDR to take the section between the A/B markers and move, copy, or delete it. However, the HDR does not actually perform any operations on the actual audio data for each track.

Instead, it creates a list of the marked sections with instructions on when to play the sections. This list is called the PLAYLIST. This type of editing is referred to as non-destructive editing because no changes are made to the data on the hard drive. This allows you to hear the results of your edits almost instantly.

Before you can continue recording on an edited track, the playlist must be reduced. When the playlist is reduced, the audio data on the hard drive is copied and pasted according to the instructions contained in the playlist.

The length of time it take to reduce a playlist is determined by the length of the playlist and the length of the sections being copied and pasted. Keep your playlists short (reduce often) to minimize the time spent waiting for the reducing function to be complete.

1. Press the FUNCTION button until the display shows "PL yL St". Press the ENTER button.

2. The display shows "rEducE". Press the ENTER button.

3. The display shows "SurE". If you are sure press the ENTER button.

4. The HDR begins reducing the playlist. The movement in the third digit indicates the playlist is being reduced. The last two digits on the display begin counting down, and when the number reaches zero the procedure is complete.

9.11 The Playlist cont.

2. Deleting The Playlist

Occasionally you may decide that a series of editing operations should be done differently. The playlist which contains these edits may be deleted, but only prior to reducing the playlist.

Note: When the playlist is reduced it is cleared of all entries. The edits in the playlist become permanent when it is reduced.

1. Press the Function button until "PLyLSt" is displayed. Press the ENTER button.
2. The display shows "rEducE". Turn the Jog Dial to select "dELEtE". Press the ENTER button.
3. The display shows "SurE". Press the ENTER button.
4. The display shows "done".

9.12 Auto - In Monitor Function

The Auto-In monitor function allows you to choose what signal will be monitored when using the auto punch in/out function. (In the auto punch in/out mode, the HDR will punch in at the A position and punch out at the B position.)

1. Auto In

When Auto In is selected, the playback signal is monitored except when recording and when using the auto punch in/out function. When using the auto punch in/out function, the track selected for recording will playback until it reaches the section marked by the A and B locators. At this point, the input signal will be monitored.

2. No Auto

When No Auto is selected, the input signal will be monitored when the track is selected for recording.

Note: The Auto In mode is the default setting.

1. Press the FUNCTION button until "Auto In" is displayed.
2. Turn the Jog Dial to select either "Auto In" or "no Auto".
3. Press the ENTER button to confirm your selection.

9.13 Send / Stop Sync Function

This function is used to stop the sync signal when a DAT recorder, being used for mastering, uses the"user bit" in the SP/DIF digital format for another purpose. If such a DAT recorder is used, it will not start recording when it recognizes the change on the "user bit".

Some of the DAT recorders, like the Tascam DA-30 MK2*, use the "user bit" for its own function. If such a DAT recorder is used for mastering the DAT recorder will not start recording unless the sync signal from the HDR is canceled.

The HDR stops the sync signal automatically when backing up the hard drive to DAT. When mastering to some DAT recorders however, the sync signal must be canceled using the Send Sync / Stop Sync function.

1. Press the Function button until "SEndSY" (send sync) is displayed.
2. Turn the Jog Dial until "StopSY" (stop sync) is displayed. Press the Enter button.
3. The display shows "done".

*Tascam DA-30 MK2 is a trade mark of the TEAC Coporation.

9.14 Auxiliary Send Function

This function allows you to set the auxiliary sends to either a pre-fader or post-fader setting.

If set to "PrEFAd" (pre-fader), the signal from the selected track is sent to the send before it passes through the track level control.If set to "Post", the signal from the selected track is sent to the send after it passes through the track level control.

Auxiliary sends for each track share the same pre or post setting.

When you turn the HDR on, the auxiliary sends are set to post-fader. These settings are not saved with the 128 programs.

1. Press the FUNCTION button until "AuSEnd" is displayed. Press the ENTER button.
2. Use the Jog Dial to select the track to be adjusted. Press the ENTER button.
3. Use the Jog Dial to select either "Post "or "PrEFAd". Press the ENTER button to confirm your selection.

The pre-post send function is used adjust the balance between the effects level and track level. This is often called the wet/dry mix. (Wet is the effects level , dry the track level.)

The pre/post setting is most often used in the post setting. This allows the send level to follow the track level. So, increasing the track level will increase the effect send level.

There are situations where this is not desirable. The pre- fader setting allows you adjust the track level control, while the level of the effects on that track stays the same.

Note: Auxiliary sends are usually used to route individual tracks to external effects units. This allows you to apply different kinds of effects and/or different amounts of the same effect to different tracks.

10. Set A/B Position

The A/B buttons are used to mark and jump to locations in your song. The A/B buttons are also used to set beginning and ending points for the auto punch in/out function and all of the editing functions.

The HDR may be in stop, play, or shuttle mode when setting the A and B position markers.

1. When approaching the desired location to place a marker, press the Enter button. The Locate, A and B, and Exit LEDs begin blinking.

2. At the desired location press the A or B button to place a marker.

3. When the marker is set, the LEDs stop blinking and the HDR returns to the mode it was in when the Enter button was pressed.

Note: When using the A/B buttons for locating positions it does not matter if the B position is before or after the A position. When using the A/B buttons to mark a section for editing or an auto punch in/out operation, the B position must be after the A position.

11. A/B Locate

When positions for the A and B buttons have been set, pressing either button will cause the HDR to locate to that position.

12. A/B Single

This function will play back the section between the A and B markers one time. This function is useful for checking the positions of the A/B markers.

Note: To use this function the B position must be after the A position.

1. Press the AB Function button until AB Single is selected. The AB Single LED is on and the Exit, and Enter LEDs start blinking.

2. Press the Enter button. Playback begins from position A and ends at position B.

3. Press the Exit button or the Stop button on the transport controls to leave the AB Single mode.

13. A/B Repeat

The AB Repeat function plays the section between the A and B markers continuously until the Exit or Stop button is pressed. This is very useful for practicing a section of your song and for studying and learning other songs. This function is also useful for verifying A/B positions when creating drum loops and other rhythmically precise edits.

Note: To use this function the B position must be after the A position.

1. Press the AB Function button until AB Repeat is selected. AB Repeat LED lights up and Enter and Exit LEDs begin to blink.

2. Press the Enter button. The section between the A and B markers plays back continuously. .

3. Press the Stop or Exit button to stop playback and leave the AB Repeat function.

14.1 Auto Punch In/Out

In the Auto Punch In/Out mode, the HDR will punch in at the A position and punch out at the B position. Before using Auto PI/O, the A and B positions must be set. It may be useful to set one of the eight locator markers to a position a few measures ahead of the A position. This is called pre-roll. With the pre-roll set you can quickly locate to a point just before the punch-in and either hear the newly recorded part, or record another take.
Notes: To use Auto PI/O the B position must be after the A position. Before using Auto PI/O, please select the appropriate monitor function. (See section **9.12**)

Rehearse
When using the Auto PI/O feature, you can practice the part to be recorded by selecting the rehearsal mode. In rehearsal mode, the track(s) selected for recording will switch to monitor the input signal between the A/B positions. This is also useful to confirm that you have set the A/B positions correctly.

1. Press the A/B Function button until Auto PI/O is selected. The display shows either "rEcord" or "rEHrSE".

2. Use the Jog Dial to select "rEHrsE". Press the Enter button. The display shows "rEAdY".

3. Select the track to be rehearsed.

4. Hold the REC button and press the PLAY button. Playback begins from the currently displayed location. The playback signal is muted and the input signal is monitored between the A/B positions.

Tip: Set a locator position a few measures ahead of the A position. When you have reached the B position, press the Locate button twice. Repeat step 4 to rehearse the punch again.

Record -- Save/NoSave

When recording with the Auto PI/O function, you have the option of recording directly over the marked position ("noSAVE"), or recording to a temporary buffer ("SAVE"). The HDR creates a temporary playlist when Save is selected. By creating this temporary playlist, you can record over the marked section in your song, and still have the original available if you can't come up with something you like better.

Note: The noise created the by the hard drive as it accesses the temporary playlist might be picked up by an open microphone. No Save is recommended in situations where this might be a problem.

14.1 Auto Punch In/Out

Record Save/No Save cont.

To see if the microphone is picking up the noise from the hard drive, select Save and make the Auto PI/O recording without performing the new part. Then, listen back to what the microphone recorded. If the hard drive noise compromises the quality of the signal, use the No Save mode.

When No Save is selected, the marked section is replaced with the new recording automatically. It is not possible to keep the original take when using No Save.

Record

1. Press the A/B FUNCTION button until Auto PI/O is selected. The display shows either"rEcord" or "rEHrSE".

2. Use the Jog Dial to select "rEcord". Press the ENTER button. The display shows Save or No Save. Use the Jog Dial to make your selection. Press the ENTER button. The display shows the current position.

3. Select the track to be recorded.

4. Set the current position to a point ahead of the A position. Set a locator position to this point. (See section **6**.)

5. Hold the REC button and press the PLAY button. Playback begins from currently displayed location. The HDR punches in at the A position and out at the B position.

6. Locate to the position ahead of the punch by pressing the Locate button twice. Press the PLAY button to hear the new recording. The HDR is still in Auto PI/O mode so you can continue to try new takes by repeating step 5. When you have a take you want to keep, press the EXIT button.

7. If No Save was selected in step 2, then the display briefly shows PL, then shows the current position.

8. If Save was selected in step 2, you now have to decide which take to keep. The display shows "SAVE it", or "rEJEct". Use the Jog Dial to make your selection. Selecting "SAVE it", will replace the original recording with the newly recorded one. Selecting "rEJEct" will discard the newly recorded take and leave the original recording intact. Press the ENTER button when you are sure of your selection. This selection can't be reversed with the UNDO function.

If you stopped between A and B, the HDR-8 will automatically reject the punch in / out signal when the exit button is pressed. Please be sure you are out of A and B point when you press exit button.

14.2 Manual Punch In/Out

This function allows you to use a footswitch to punch in and out while the HDR is in PLAY mode. Any type of momentary footswitch with the contacts normally open can be used. The Manual PI/O can't be reversed by the UNDO function.

Note: Be sure to select the appropriate monitor function as described in section **9.12**.

1. Connect the footswitch to the jack labeled Punch In/Out on the rear of the HDR.

2. Select the track(s) to be punched.

3. Press the PLAY button.

Note: If the REC button is held and PLAY is pressed, recording begins immediately and the footswitch will not function.

4. The HDR will punch in at the first contact of the footswitch and punch out at the second contact.

Editing Functions

15. Move

This function takes the section of a track between the A/B markers (the source) and moves it to a different position on the same track, or to a different track (the destination).

The source data can overwrite the data on the destination track, or it can be inserted into the destination track. When data is inserted, the data at the insertion point is moved backwards to make room for the source data.

The current position shown on the display before the EDIT button is pressed, is the destination position.

If the results of an edit function are unsatisfactory, it can be undone with the UNDO function.

Move

1. Determine the destination position and have it shown in the counter display.
2. Press the EDIT button until the MOVE LED is on. The ENTER and EXIT LEDs blink and the display shows "Ab ALL".
3. You can choose to move all tracks, or only one track. Use the Jog Dial to make your selection. Press the ENTER button.
4. Select the destination track(s). with the Jog Dial. Press the enter button.
5. The display shows "OvEr" or "InSErt". Use the Jog Dial to make your selection. Press the ENTER button. The display shows "donE".

16. Copy

The Copy function takes the data between the A/B markers and copies it to the same track or to another track.

The source data can overwrite the data on the destination track, or it can be inserted into the destination track. When data is inserted, the data at the destination position is moved backwards to make room for the source data.

The source data can be copied up to 24 times.

The current position shown on the display before the EDIT button is pressed, is the destination position.

If the results of an edit function are unsatisfactory, it can be undone with the UNDO function.

Copy All Tracks

1. Determine the destination position and have it shown in the counter display.

2. Press the EDIT button until the COPY LED is on. The ENTER and EXIT LEDs blink and the display shows "Ab ALL". This option will copy all eight tracks to the destination position.

3. Press the ENTER button. Display shows the destination tracks which is only "to ALL" in this case.

4. Press the ENTER button. Display shows "InSErt" or "OvEr". Use the Jog Dial to make your selection. Press the ENTER button.

5. The display shows "CoPY XX" Select the number of copies. The range is 1 to 24. Press the ENTER button.

6. The display shows "busy", then "done". The copy function then returns to step 2. You may continue with more copy operations or press the EXIT button to leave copy mode.

16. Copy cont.

Copy One Track

1. Determine the destination position and have it shown in the counter display.

2. Press the EDIT button until the COPY LED is on. The ENTER and EXIT LEDs blink.

3. The display shows "Ab ALL". Use the Jog Dial to select the source track. Press the ENTER button.

4. The display shows "to tr XX". Use the Jog Dial to select the destination track. Press the ENTER button.

5. Display shows "InSErt" or "OvEr". Use the Jog Dial to make your selection. Press the ENTER button.

6. The display shows "COPY XX". Use the Jog Dial to select the number of copies, up to 24. Press the ENTER button.

7. The display shows "busy", then "done".

8. Press the EXIT button to leave copy mode.

17. Delete

The Delete function removes the section of the track(s) between the A/B positions.

To keep the data that is after the B position in the same place as before the delete, select "ErASE".

If you want to close the gap between the A and B positions and move the information that follows the B position to the A position, select "SHiFt".

1. Press the EDIT button until the DELETE LED is on. The ENTER and EXIT buttons blink.

2. The display shows "Ab ALL". Use the Jog Dial to select the track(s) that contain the data to be deleted. Press the ENTER button.

3. The display shows "ErASE", or "SHiFT". Use the Jog Dial to make your selection. Press the ENTER button.

4. The display shows "busy", then "done".

5. Press the EXIT button to leave delete mode.

18. Merge

The merge function combines data from two or more different tracks onto one track, or onto multiple tracks.

For example, if tracks one and two have a stereo mix of bass and drums, track three has an electric guitar, and track four has an acoustic guitar, all four of these tracks can be merged onto tracks five and six. Once merged to their new tracks, the old tracks can be erased and additional instruments recorded.

Because the HDR records audio signals digitally, there is no noise added when tracks are merged. By merging tracks, it is very simple to build complex pieces with only six tracks of audio. A little practice may be required to get the mix of the merged tracks just right, but it will be worth your time when you get it.

The tracks being merged are routed through the internal mixer on their way to the destination track(s). This means that the Pan, EQ, Volume, Mute and Master Level settings will control the merged tracks. The signals from AUX return will be converted to digital signal and added to the destination tracks.

When merging to one destination track, the destination track receives its signal from the Left and Right Busses of the internal mixer and PAN contrtol is bypassed. **Note:** Be aware that excessive volume levels and pre-EQ levels on the source tracks can cause distortion on the destination track(s).

When merging to two tracks, the lower numbered destination track receives the output from the Left Buss of the internal mixer, and the higher numbered destination track receives the output from the Right Buss of the internal mixer.

Merging Tracks

1. Press the UTILITY button until the MERGE LED is on.

2. The display shows "SurE". Press the ENTER button. The display shows "busy", and then shows the current location.

3. Select the destination track(s) with the track select buttons.

4. Hold the REC button and press the PLAY button. The HDR begins merging the tracks. The actual signal from the source tracks is recorded onto the destination tracks after it passes through the internal mixer.

5. Press the STOP button to end merging.

6. Press the EXIT button. The display shows "busy", then displays the current location.

19. MIDI

Connecting the HDR to MIDI devices, allows many functions of the HDR to be controlled remotely.

The parameters of the internal mixer can be controlled by Continuos Controller (CC) messages. With this function, the internal mixer of the HDR-8 can be controlled by the MIDI fader controller or compter based sequence program. When the sequencer program is used, all the parameter of the internal digital mixer can be visualized on the screen and the activities can be recorded in the sequencer allowing full automated mixing.

The transport controls and selecting tracks for recording can be controlled by MIDI Machine Control (MMC) messages. These messages can be transmitted by either a sequencing program or a dedicated MIDI controller.

The HDR will also record and transmit MIDI Clock and MIDI Time Code (MTC). Since the HDR records the MIDI Clock and MTC on a dedicated track of the hard drive, you can sync your sequencer to the HDR and still have eight audio tracks.

The CC assignments needed to control the internal mixer are listed in the following table. Please assign each parameter of the MIDI controller or the Mixer Map on the sequence program to control the parameter of the internal mixer.

Vestax HDR-8 Continuous Controller Assignments

Controller number	Control Parameter	Controller Range	Parameter range
0-7 (0-7 hex) (2 byte controller accepted)	pre eq level, trks 1-8	full scale	off, -57.5,-57.25,...+6.0dB
8-15 (08-0F) (2 byte controller accepted)	track volumes 1-8	full scale	off, -63.5,-63.25,...0dB
16-23 (10-17)	pan, tracks 1-8	14-114	left 100%,98%,...Right 100%
24-25 (18-19)	aux send masters 1-2	full scale	off,-63.0,62.5,...0dB
30 (1C)	left master volume	full scale	off,-63.0,-62.5,...0dB
31 (1D)	right master volume	full scale	off,-63.0,-62.5,...0dB
32-39 (20-27)	optional LSB for pre eq level, tracks 1-8		
40-47 (28-2F)	optional LSB fot track volumes 1-8		
48-55 (30-37)	eq 1 gain, tracks 1-8	4-124	-12.0,-11.8,...+12.0dB 0dB=64
56-63 (38-3F)	eq 1 freq, tracks 1-8	12-120	50,53,...11.986KHz
64-71 (40-47)	eq 1 type, tracks 1-8	0-65	None,Hi Shelf, Lo Shelf Bell, 0.3,...4 octave
72-79 (48-4F)	eq 2 gain, tracks 1-8	4-124	same as eq1 gain
80-87 (50-57)	eq 2 freq, tracks 1-8	12-120	same as eq1 freq
88-95 (58-5F)	eq 2 type, tracks 1-8	0-65	same as eq1 type
96-103 (60-67)	aux send 1, tracks 1-8	full scale	off,-63.0,62.5,...0dB
104-111 (68-6F)	aux send 2, tracks 1-8	full scale	off,-63.0,62.5,...0dB
112-119 (70-77)	mute, tracks 1-8	switch	0-63 unmuted,64-127muted

19.1 Program Channel

Each of the 128 programs stored by the HDR can be recalled by sending the HDR a MIDI Program Change message. In order to receive these messages, the HDR must be set to the same MIDI channel as the messages are transmitted on. (HDR programs are covered in sections **9.1** and **9.2**)

1. Press the UTILITY button until MIDI is selected. The display shows "Pro cH". Press the ENTER button.

2. Use the Jog Dial to select the MIDI channel that matches the transmitting channel. Press the ENTER button.

Note: There are two additional choices listed, " cH ALL", and "ChnonE". Channel All will respond to program changes on all MIDI channels. If Program Change messages are being transmitted on more than one channel, this setting will produce unpredictable results. If Channel None is selected all Program Change messages will be ignored.

3. The display shows "done" and displays the current location.

19.2 Continuous Controller Channel

Every parameter of the internal mixer can be controlled by sending CC messages to the HDR. In order to receive these messages, the HDR must be set to the same MIDI channel as the messages are transmitted on.

1. Press the UTILITY button until MIDI is selected. Use the Jog Dial to select " CC ch". Press the ENTER button.

2. Use the Jog Dial to select the MIDI channel that matches the transmitting channel. Press the ENTER button.

Note: There are two additional choices listed, " cH ALL", and "ChnonE". Channel All will respond to program changes on all MIDI channels. If Program Change messages are being transmitted on more than one channel, this setting will produce unpredictable results. If Channel None is selected all Program Change messages will be ignored.

3. The display shows "done" and displays the current location.

19.3 Synchronization Switch

This function determines whether or not the HDR transmits MIDI synchronization messages. These messages are used for syncing MIDI devices to the HDR.

1. Press the UTILITY button until MIDI is selected. Use the Jog Dial to select "SYnc". Press the ENTER button.

2. Use the Jog Dial to select either "SEnd SY", or "no SEnd". Press the ENTER button.

3. The display shows "done", then displays the current location.

19.4 Stripe

This function is used to stripe (record) MIDI Clock or MTC on the dedicated sync track of the HDR. **Note:** It is not necessary to select a track for recording when using this function. The HDR automatically records the sync signal on the sync track of the hard drive.

Which sync signal you use depends on your individual equipment

The HDR can record the following types of sync signals:
MIDI Clock
MTC 24 frames per second
MTC 25 frames per second
MTC 30 drop frame
MTC 30 frames per second

Note: The procedures for striping MIDI Clock are different than striping MTC. In order to record the MIDI sync signal, a song must be created, and the hard drive must be unprotected.

MIDI Clock

1. Locate to the beginning of the song. (Counter 00:00:)

2. Press the UTILITY button until MIDI is selected. Use the Jog Dial to select "StriPE". Press the ENTER button.

3. The display shows "rEc cl". Press the ENTER button.

4. The display shows "SurE". Press the ENTER button.

5. The HDR starts playing. Start the MIDI device which is sending the MIDI Clock messages.

6. The HDR begins recording the MIDI Clock signal. The REC LED does not come on, but you can confirm the recording is taking place because the display will show the beat number increasing as the sequencer plays the song.

7. When the song is finished, stop the sequnecer. The HDR display will show the current location and continue playing.

8. Press the STOP button to leave the striping mode.

MIDI Time Code (MTC)

1. Press the UTILITY button until MIDI is selected. Use the Jog Dial to select "StriPE". Press the Enter button.

2. Use the Jog Dial to select the desired MTC frame rate. Press the ENTER button.

3. The display shows "OFFSEt". Press the ENTER button.

4. The display shows " 0 0 0".

Offset

When striping MTC, an offset time can be set. An offset is used to align the location on the HDR and MIDI device. Unless the MIDI device requires some offset, the offset time should be set to 00 00 00.

5. Use the Jog Dial to set the offset time. Press the ENTER button.

6. The display shows "SurE". Press the ENTER button.

7. The HDR generates and records the selected MTC signal on the dedicated sync track, and stops when the end of the song is reached.

19.5 Display Mode

This function is used to control whether the mixer's bargraph display responds to incoming MIDI messages or ignores them.

If set to "rESPnd" (Respond), Continuous Controller messages will cause the bargraph display and mixer control LEDs to show what setting is being adjusted and display its value.

If set to "norESP" (No Respond), the Continuous Controller messages will still control the mixer, but the controls and values will not be displayed on the bargraph or mixer panel.

1. Press UTILITY until MIDI is selected. Use the Jog Dial to select "disPLAY". Press the ENTER button.

2. Use the Jog Dial to select either Respond or No Respond. Press the ENTER button.

3. The display shows "done", then the current location.

19.6 Reference Track

When more than two HDRs are synchronized and controlled by MIDI Machine Control, the recording track assignments of each HDR needs to be assigned to different numbers so that any of the tracks can be selected for recording. This function is used to assign the number of the first track of each unit.

Each HDR needs to have a unique number assigned to its first track. The number assignment is not stored in memory, so when the units are powered down all assignments are lost.

1. Press the UTILITY button until MIDI is selected. Use the Jog Dial to select "rEF tr" (Reference Track). Press the ENTER button.

2. The display shows "trAc X". Use the Jog Dial to select the number of the first track. Press the ENTER button.

3. Repeat steps 1 and 2 for each of the HDR units being used.

20. Backup and Load Data

Making Room For More Songs

Creating a song (see section 10.40) defines a portion of the hard to the newly created song. As more songs are created, the space available on the hard drive decreases. To make room on the hard drive for a new song, you can either delete a song or back it up on a DAT.

When a song is deleted (see section **10.4**), the section of the hard drive which was designated for it becomes available for use with a new song. The deleted song can't be recalled.

Note: The audio data of the deleted song still remains on the hard drive. However, since there is no song associated with it, the audio tracks can't be heard. When you have created a new song and are recording new tracks, the audio tracks from the deleted song may still playback. These "orphaned" audio tracks should be erased by selecting them for recording, muting them, and then recording over them while they are muted. Since the HDR can record four tracks at a time, it will take two times through the song to complete the erasure. Be sure to unmute the tracks before beginning work on the new song or nothing will be recorded on them.

Backing Up Songs To DAT

When a song is backed up, it can be loaded back into the HDR. Once loaded back into the HDR, you can continue working on it. The backup function allows you to either backup all the data on the hard drive, or backup the current song.

Data backed up with the backup song function, must be loaded with the load song function. Data backed up with the backup all function, must be loaded with the load all function.

When the hard drive is backed up with the Backup All function, the songs, the locators, and the programs will all be backed up. The backup function will take four times the length of the entire hard drive's recording time.

When the hard drive is backed up with the Backup Song function, only the data of the current song will be backed up. Locate and program information will not be backed up. Backing up the song takes four times the length of the song.

20.1 Backup All Data

1. Connect the optical (preferred) or coaxial SP/DIF output from the HDR to the input of the DAT recorder.

2. Press the UTILITY button until Backup/Load is selected. Press the ENTER button. Use the Jog Dial to select "bAcALL". Press the ENTER button.

3. The display shows "rEcdAt".

   Note: The data being backed up will be audible through the master outputs. Be sure to turn down the monitor system before beginning step four.

4. Begin recording on the DAT recorder. Record ten seconds of blank space on the DAT. Press the ENTER button.

5. The display shows "trAc 1". All eight tracks will be recorded to the DAT recorder. When the backup is complete, the counter will display the current position.

20.2 Backup Song

1. Connect the optical (preferred) or coaxial SP/DIF output from the HDR to the input of the DAT recorder.

2. Press the UTILITY button until Backup/Load is selected. Press the ENTER button. Use the Jog Dial to select "bcSong". Press the ENTER button.

3. The display shows "rEcdAt".

   Note: The data being backed up will be audible through the master outputs. Be sure to turn down the monitor system before beginning step four.

4. Begin recording on the DAT recorder. Record ten seconds of blank space on the DAT. Press the ENTER button.

5. The display shows "trAc 1". All eight tracks will be recorded to the DAT recorder. When the backup is complete, the counter will display the current position.

20.3 Load All Data

The Load All function replaces the data on the hard drive with the data which was backed up with the Backup All function. Load All will overwrite the entire hard drive.

1. Connect the optical (preferred) or coaxial output from the DAT recorder to the appropriate input on the HDR.

2. Press the UTILITY button until Backup/Load is selected. Use the Jog Dial to select "Ld ALL". Press the ENTER button.

Note: If "no din" remains in the counter, the HDR is not receiving the digital clock correctly from the DAT recorder. Please check the digital in/out connection. Also, make sure the DAT recorder is set up to send a digital signal. Some DAT machines do not send the digtal clock until the tape is played. If this appears to be the case, begin playing the DAT between steps two and three.

3. The display will show "no din" (no digital input) for a few seconds, then change to "dAtPLA" (DAT Play).

4. Begin playing the DAT. The display showa "trAc 1" when the DAT comes to the beginning of the data. The track number will increment as each track is loaded onto the hard drive. When the Load All fumction is complete, the display will show the current position.

20.4 Load One Song

The data saved with the Backup Song function can be loaded back onto the hard drive by using the Load Song function. This takes approximately three times the length of the song.

Songs backed up using the Backup All function can't be loaded by the Load Song function. The locator information and the 128 programs are backed up only when using the Backup All function. They can't be loaded by the Load Song function.

Before loading a song, a song must be created and be the current song. The song you create must be as long or longer than the song being loaded. The display will show "no Fit" when the newly created song is not long enough. Delete the song if the no fit message is displayed, and create the song again; this time with a longer length. Simply knowing the length of the song being loaded, and creating a song with the necessary length will allow you to avoid this situation.

1. Press the UTILITY button until Backup/Load is selected. Press the ENTER button. Use the Jog Dial to select "LdSong". Press the Enter button.

2. The display shows "no din" for a few seconds, then "SurE". Press the ENTER button.

Note: If "no din" remains in the counter, the HDR is not receiving the digital clock correctly from the DAT recorder. Please check the digital in/out connection. Also, make sure the DAT recorder is set up to send a digital signal. Some DAT machines do not send the digtal clock until the tape is played. If this appears to be the case, begin playing the DAT between steps two and three.

3. The display shows "dAtPLA". Begin playing the DAT. If "no fit" is displayed, refer to the third paragraph of section 21.4.

4. When the Song Load function is complete, the display will show the current position.

21. Synchronizing Two or More HDR Units

Any number of HDRs may be synchronized by the following procedure.

Note: If MIDI will be used for MIDI MACHINE CONTROL or for automating the internal mixer, connect the MIDI THRU of the master unit to the MIDI IN of the slave unit. If any additional units are synchronized, connect the MIDI THRU of the previous unit to the MIDI IN of the following unit.

1. Connect the optical cable from the digital out of the master unit to the digital in of the slave unit.

Note: Complete steps 2-4 for each of the slave units attached.

2. Press the FUNCTION button until "Syn-Int" is displayed.

3. Use the Jog Dial to select "SLAvE".

4. Press the ENTER button to complete the change.

Note: The output of the master L/R buss from each unit is passed through the digital connection and available at the digital out of the last unit.

22. Installing a Second Hard Drive

An additional hard drive may be installed in the HDR. This allows for additional recording time.

The second hard drive needs to be set to the slave position prior to installation Please refer to the manual of the new hard drive for instructions.

Some hard drives will not function properly with the HDR. Please contact Vestax for a list of the currently recommended models.

1. Disconnect the HDR from the AC power source.
2. Remove the six screws and take off the cover.
3. Remove the three screws which secure the hard drive base.
4. Lift the hard drive base and install the second drive with the provided screws.
5. Connect the flat cable and the power supply cable.
6. Check each cable to be sure that none were loosened during the installation procedure.
7. Reassemble the unit.

23. Error Messages

message	descriprion	solution	refer to
Protct	momory protected	unprotect the memory	section 9.8
noSong	no song area created	create the song area	section 9.4
rEducE	track is edited and needs to be reduced	reduce playlist	section 9.11
SEtAb	A and B position are not specified property	set A and B postition	section 10
no din	no digital clock present	check the digital in or connected equipment	--
no Fit	the song doesn't fit the song area	delete the song and re-create longer	section 9.4
no Hd	hard disc error	check the hard disc or connection	--

24. Problem Chart

problem	check point
Cannot load the back up data	Check the back up have been done using back all or back song. Backing up and loading need to use the same selection.
DAT recorder does not start recording on digital mastering	Try to stop the sync signal. Please refer to section 9.13.