The home of the turntable

THE VINYL ENGINE®

For more turntable manuals and setup information
please visit www.vinylengine.com

www.vinylengine.com

Service Manual

PIONEER®



STEREO TURNTABLE

PL-200 KUT,KCT
PL-200X KU

For descriptions and adjustment methods of the D.D.motor and the mechanism employed in this model, refer to the Supplementary Service Manual (ART-467) for the PL-200, PL-255, PL-300, and PL-400 models.

CONTENTS

1. SPECIFICATIONS 2
2. EXPLODED VIEWS
   - 2.1 Main Panel 3
   - 2.2 Sub Panel. 6
   - 2.3 D.D. Motor 7
3. SCHEMATIC DIAGRAM AND PARTS LIST 8
4. P.C. BOARD CONNECTION DIAGRAM 11
5. PACKING 13

PIONEER ELECTRONIC CORPORATION 4-1, Meguro 1-Chome, Meguro-ku, Tokyo 153, Japan
U.S. PIONEER ELECTRONICS CORPORATION 85 Oxford Drive, Moonachie, New Jersey 07074, U.S.A.
PIONEER ELECTRONIC (EUROPE) N.V. Luithagen-Haven 9, 2030 Antwerp, Belgium
PIONEER ELECTRONICS AUSTRALIA PTY. LTD. 178-184 Boundary Road, Braeside, Victoria 3195, Australia
<ART-426-0>

F JULY 1979 Printed in Japan

www.vinylengine.com

1. SPECIFICATIONS

Motor and Turntable

Drive System ..... Direct-drive
Motor ..... DC servo motor
Turntable Platter .....310mm diam. aluminum alloy die-cast
Moment of Inertia ..... 150kg-cm^2 (including platter mat)
Speeds ..... 33-1/3 and 45rpm
Speed Control Range ..... ±2%
Wow and Flutter .....Less than 0.025% (WRMS)
Signal-to-Noise Ratio ..... More than 75dB (DIN-B)
(with Pioneer cartridge model PC-135)

Tonearm

Type ..... Static-balance type, S-shaped pipe arm
Effective Arm Length 221mm
Overhang 15.5mm
Usable Cartridge Weight ..... 4g (min.) to 9g (max.)

Subfunctions

Auto return mechanism, Anti-skating force control, Stylus pressure direct-readout counterweight, Cueing device, Strobe light, Free stop hinges

Semiconductors

ICs 2
Transistors 2
Diodes 2
Hall Elements 3

Miscellaneous

Power Requirements AC120V, 50, 60Hz
Power Consumption 7W
Dimensions ..... 420(W) x 96(H) x 365(D)mm
16-1/2(W) x 3-13/16(H) x 14-3/8(D)in.
Weight ..... 6kg/13 lb 4 oz

Accessories

EP Adaptor 1
Cartridge mounting parts (KCT, KUT)
Cartridge mounting screws 6
Cartridge mounting nuts 2
Cartridge mounting washers 2
Operating Instructions 1

PC-135 Specifications (PL-200X KU)

Type ..... Induced magnet type
Stylus ..... 0.5 mil diamond (PN-135)
Output Voltage ..... 3mV (1kHz, 50mm/s Peak velocity, LAT)
Tracking Force ..... 1.5g to 2.3g (proper 2g)
Frequency Response ..... 10 to 25,000Hz

NOTE:
Specifications and design subject to possible modification without notice, due to improvements.

www.vinylengine.com

2. EXPLODED VIEWS

2.1 MAIN PANEL

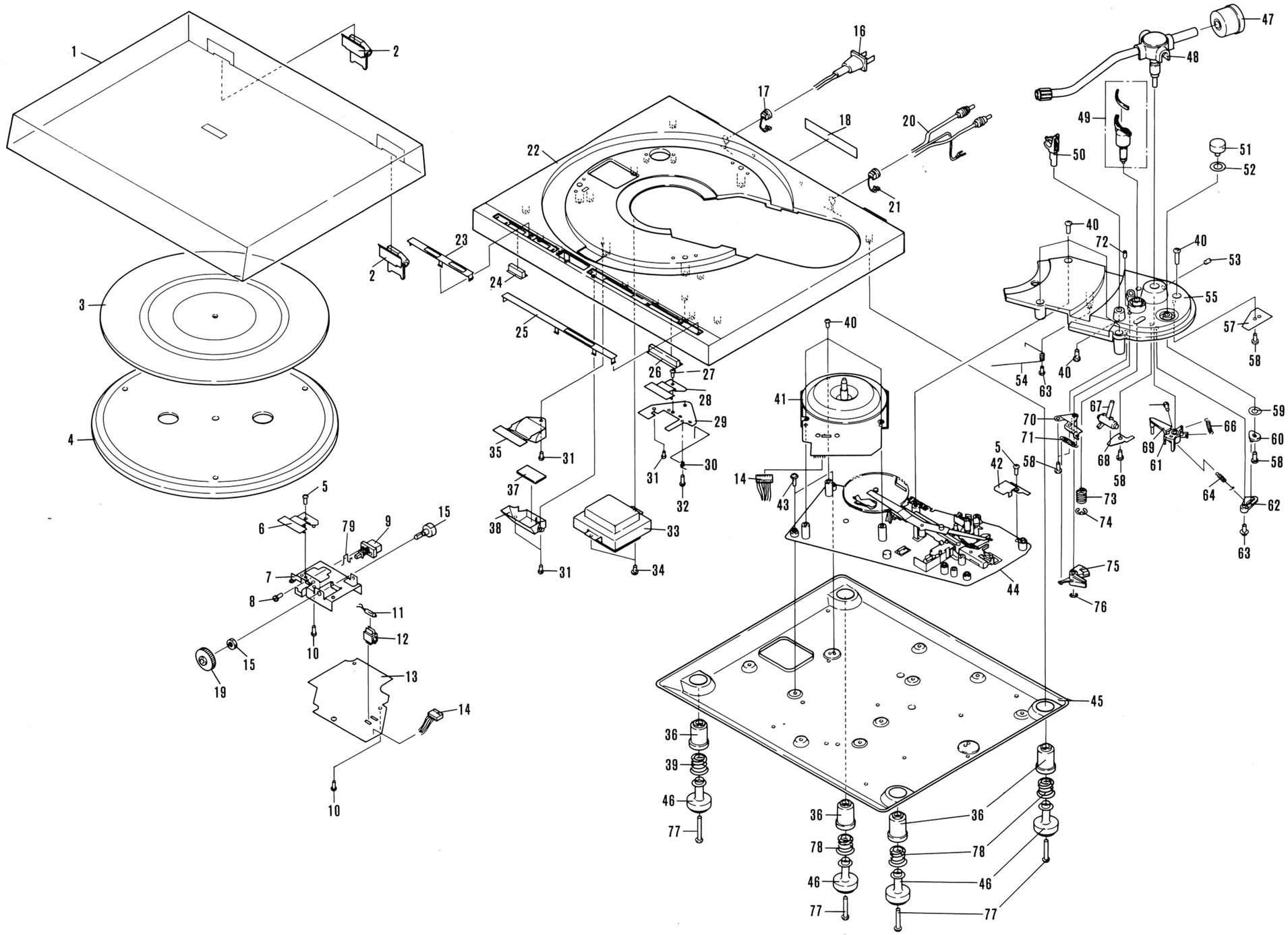

www.vinylengine.com

Parts List of Main Panel

NOTE:

- *Parts without part number cannot be supplied.*
- *The ⚠ mark found on some component parts indicates the importance of the safety factor of the part. Therefore, when replacing, be sure to use parts of identical designation.*

Key No.	Part No.	Description
1.	PNV-034	Dust cover
2.	PXB-155	Hinge assembly
3.	PEB-152 (KUT, KU) PEB-150 (KCT)	Rubber mat assembly
4.	PNR-114	Turntable platter
5.		Deltite screw 3 x 8
6.		Button guide C
7.		Angle
8.		Semes A screw 3 x 5
9.	PSG-020	Push switch
10.		Taptite P screw 3 x 8
⚠11.	PEL-037	Neon lamp
12.		Neon lamp base
⚠13.		Power supply assembly
14.	PDE-061	Connector assembly
15.	PCS-016	Variable resistor
⚠16.	PDG-017	AC power cord
17.	PEC-058	Strain relief
18.		Name plate
19.	PAC-047	Knob
20.	PDE-064	OUTPUT cord
21.	PEC-056	Strain relief
22.	PNX-110 (PL-200) PNX-111 (PL-200X)	Panel
23.	PAM-061 (PL-200) PAM-065 (PL-200X)	Name plate
24.	PAC-043	Push button
25.	PAM-060 (PL-200) PAM-064 (PL-200X)	Name plate
26.	PAC-044	Button
27.		Deltite screw 3 x 8
28.	PNX-052	Button guide A
29.		Button base
30.	PXB-151	Cut spring A assembly
31.		Taptite P screw 3 x 8
32.	PBA-086	Screw
⚠33.	PTT-077 (KU, KUT) PTT-090 (KCT)	Power transformer Power supply assembly
34.		Taptite P screw 4 x 10
35.	PNX-051	Lens
36.	PEB-163	Rubber cushion
37.		Mirror
38.		Lens holder
39.	PBH-240	Foot spring
40.	PBA-108	Screw
41.	PXM-074	Motor
42.		Protector
43.	PBA-109	Screw
⚠44.		Subpanel assembly
45.		Base
46.	PNX-062	Foot case
47.	PXB-092	Weight assembly
48.	PPD-598 (PL-200) PPD-590 (PL-200X)	Arm assembly
49.	PXB-107	EV sheet assembly
50.	PXB-094	Arm rest assembly
51.	PAC-041 (PL-200X) PAC-045 (PL-200)	AS knob
52.	PBF-005	AS washer
53.		Hexagon socket headless set screw
54.	PXB-152	Cut spring assembly
55.	PNX-053 (PL-200) PNX-085 (PL-200X)	Arm base
56.	PBA-108	Screw
57.		OUTPUT terminal
58.		Taptite P screw 3 x 8
59.	PBE-012	Washer
60.	PNX-054	AS adjusting plate
61.	PNX-061	PU plate B
62.	PNX-055	Lever
63.		Washer faced taptite P screw 3 x 10
64.	PBH-236	AS spring
65.		----------
66.	PBH-259	PU plate spring
67.	PXT-382	EV lever unit
68.	PBK-042	EV plate spring A
69.	PNX-060	PU plate A
70.	PXT-385	EV plate spring B unit
71.	PBH-238	EV cam spring
72.		Hexagon socket headless set screw 3 x 12
73.	PBH-237	EV spring
74.		E type washer 7
75.	PNX-059	EV cam
76.		E type washer 3
77.	PBA-099	Screw
78.	PBH-241	Foot spring B
79.	PBH-261	Spring

www.vinylengine.com

2.2 SUB PANEL

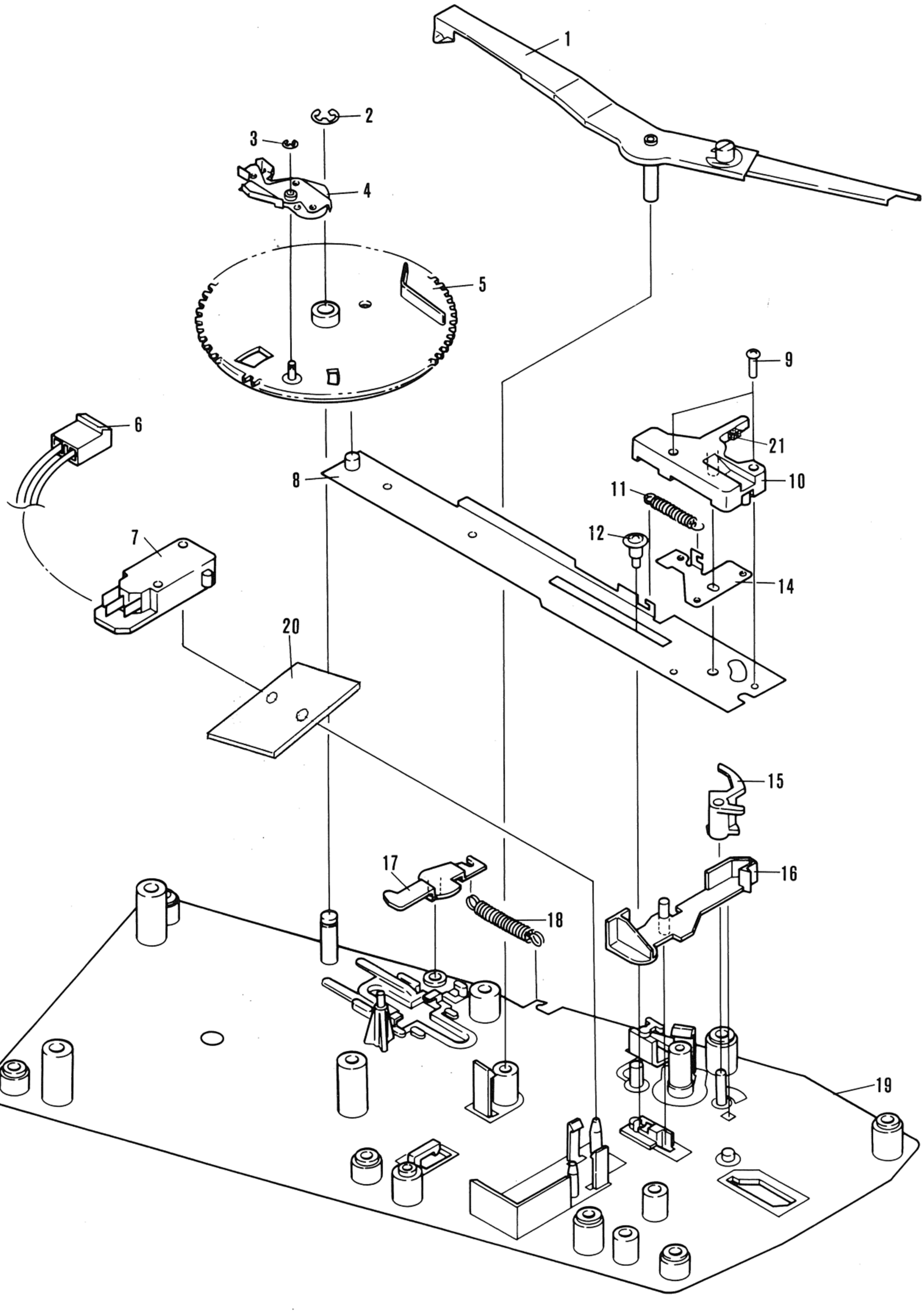

www.vinylengine.com

Parts List of Sub Panel

Key No.	Part No.	Description
1.	PXT-355	Detector lever unit
2.		E type washer 4
3.		E type washer 1.5
4.	PYY-058	Return signal unit
5.	PNX-036	Cam
⚠6.	PDE-070	Connector assembly
⚠7.	PSF-006	Microswitch
8.	PXT-356	Plate
9.		+ Pan head screw 2.6 x 10
10.	PNX-033	EV cam
11.	PBH-224	Spring
12.	PBA-103	Screw
13.		
14.	PNC-126	START plate
15.	PNX-031	Switch plate
16.	PNX-030	Switch lever
17.	PNX-035	Plate
18.	PBH-225	Spring
19.		Sub panel unit
20.	PEC-057	Insulator
21.	PEC-065	EV cam cushion

2.3 D.D. MOTOR

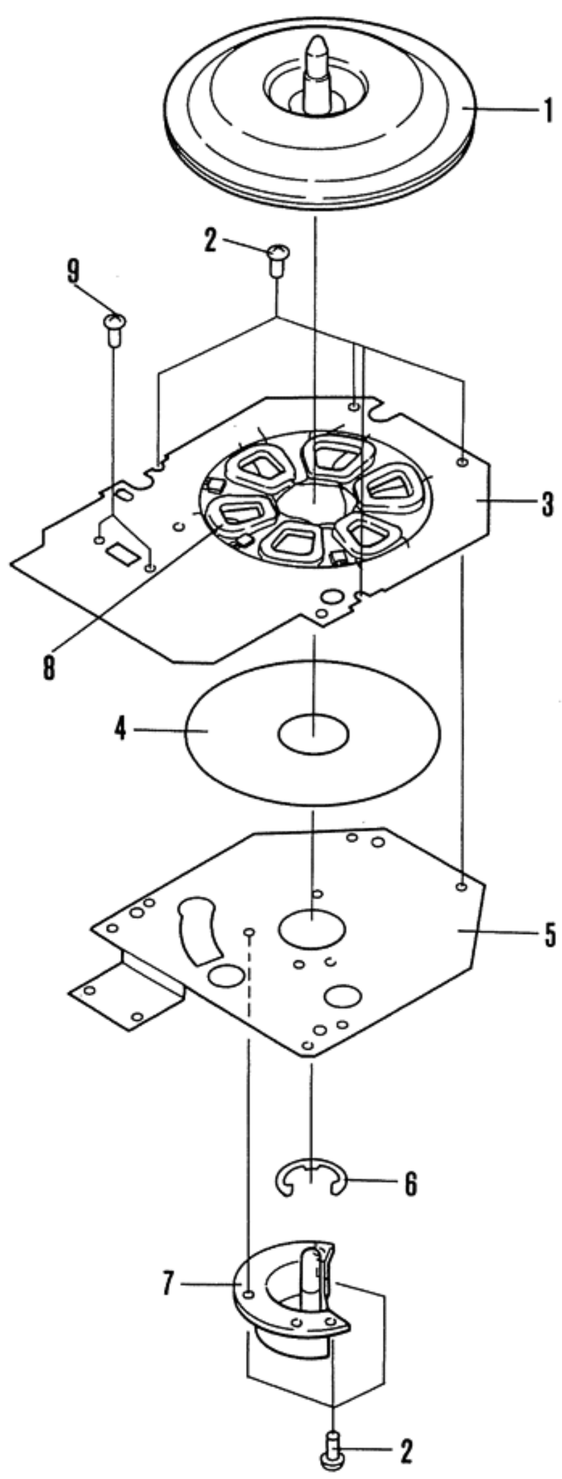

Key No.	Part No.	Description
1.		Rotor unit
2.		Taptite screw 3x5
3.		Control assembly
4.		Insulator
5.		Base unit
6.		EW12
7.		Shaft holder
8.		Coil
9.		Taptite screw 3x12

www.vinylengine.com

3. SCHEMATIC DIAGRAM AND PARTS LIST

NOTE:

- *When ordering resistors, first convert resistance values into code form as shown in the following examples.*

Ex. 1 When there are 2 effective digits (any digit apart from 0), such as 560 ohm and 47k ohm (tolerance is shown by J = 5%, and K = 10%).

560Ω——56 ×10¹——561 . . . . . RD¼PS 5 6 1 J
47kΩ——47 ×10³——473 . . . . . RD¼PS 4 7 3 J
0.5Ω——0R5 . . . . . RN2H 0 R 5 K
1Ω———010 . . . . . RS1P 0 1 0 K

Ex. 2 When there are 3 effective digits (such as in high precision metal film resistors).

5.62kΩ 562 × 10¹ 5621 . . . . . RN¼SR 5 6 2 1 F

- *The ⚠ mark found on some component parts indicates the importance of the safety factor of the part. Therefore, when replacing, be sure to use parts of identical designation.*

Parts List of D.D. motor (PXM-074)

CAPACITORS

Part No.	Symbol & Description
CEA 101M 6.3NP	C1
CKDYF 403Z 50	C2
CKDYB 681Z 50	C3
CQMA 104J 50	C4
CSZA R47K 35	C5
CKDYF 103Z 50	C6, C13
CQMA 104K 50	C7
CEA 010P 50	C8
CEA 100P 16	C9
CEA 471P 16	C10—C12

Note: When ordering resistors, convert the resistance value into code form, and then rewrite the part no. as before.

RESISTORS

Part No.	Symbol & Description	
RD¼PS □□□J	R1—R6, R9—R12	
RD½PS □□□J	R7, R8	
PCP-040	VR1	(10k-B)
PCP-039	VR2	(6.8k-B)

SEMICONDUCTORS AND OTHERS

Part No.	Symbol & Description	
PA2004	IC1	
PA2005A	IC2	
PHE-303FA	H1—H3	Hall element

Parts List of Power Supply Assembly

Part No.	Symbol & Description	
2SD880	Q1	
2SC 945	Q2	
PCX-010	D1	
WZ-177	D2	
CKDYF 103Z 50	C4	
CEA 331M 50L	C2	
CEA 101M 25L	C3	
⚠ PCL-036	C1	
⚠ RS2PF 103J	R1	
RS1PF 332J	R2	
PSG-020	S2	Speed selector
PCS-016 5k-B	VR1	Speed control
PDE-061		Connector assembly
⚠ PEL-037		Neon lamp
PNX-015		Insulator
PBH-261		Push button spring

www.vinylengine.com

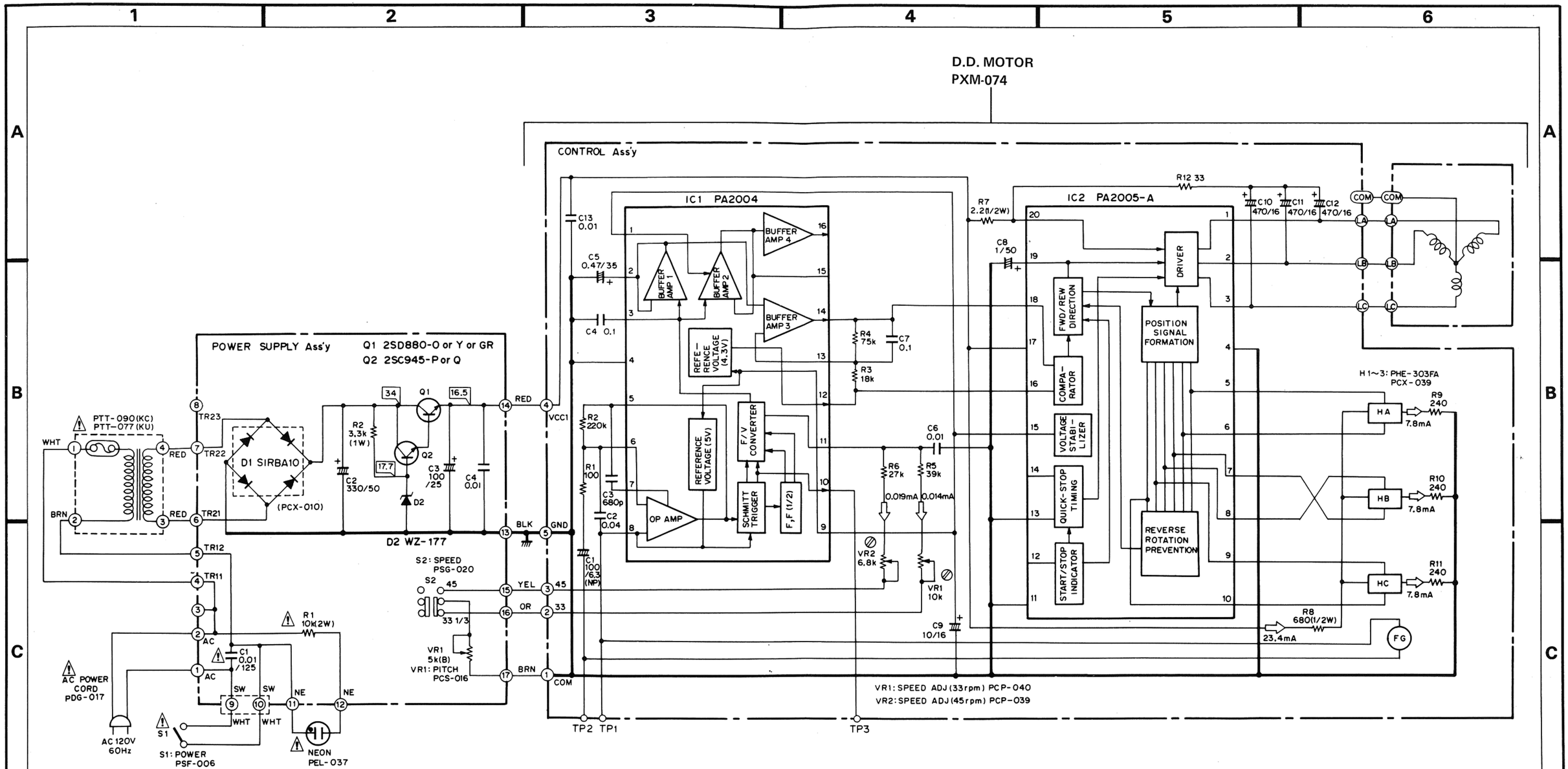

1. RESISTORS:
Indicated in Ω, ¼W, ±5% tolerance unless otherwise noted k : kΩ, M : MΩ, (F) : ±1%, (G) : ±2%, (K) : ±10% tolerance.

2. CAPACITORS:
Indicated in capacity (μF)/voltage (V) unless otherwise noted p : pF
Indication without voltage is 50V except electrolytic capacitor.

3. VOLTAGE, CURRENT:
▭ : DC voltage (V) at no input signal
⇦ mA : DC current at no input signal

4. OTHERS:
⊘ : Adjusting point.
The ⚠ mark found on some component parts indicates the importance of the safety factor of the part. Therefore, when replacing, be sure to use parts of identical designation.

SWITCHES:
S1: POWER ON — OFF
S2: SPEED 33 1/3rpm — 45rpm
The underlined indicates the switch position.

This is the basic schematic diagram, but the actual circuit may vary due to improvements in design.

www.vinylengine.com

4. P.C.BOARD CONNECTION DIAGRAM

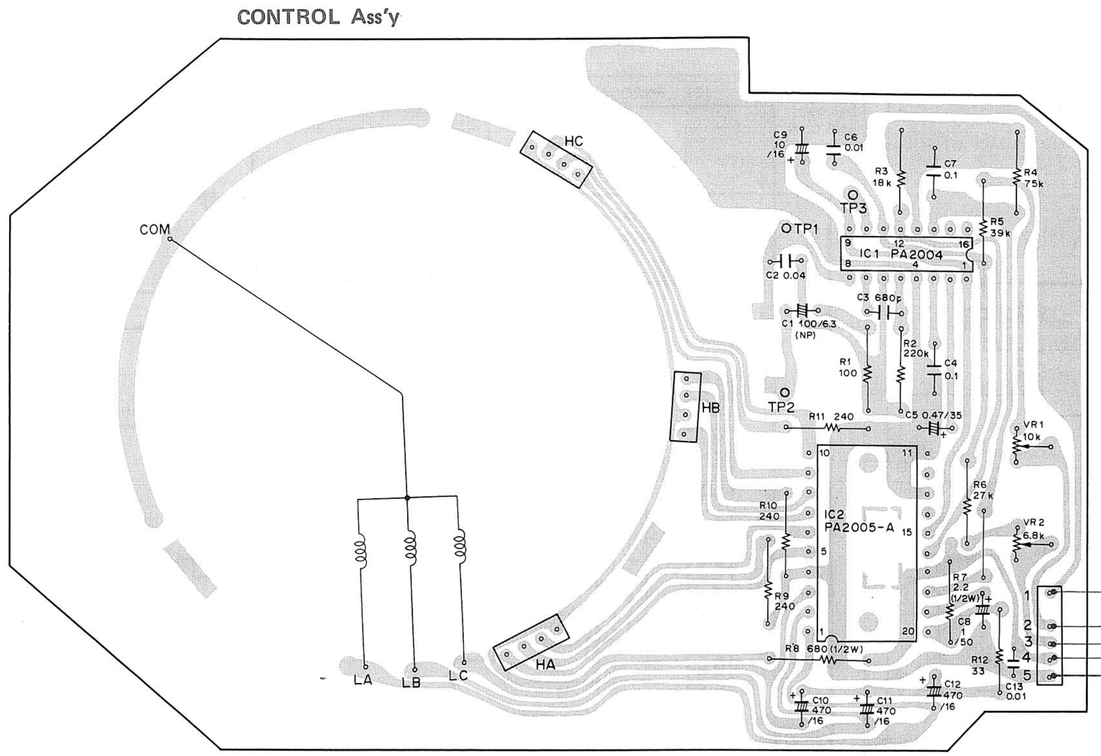

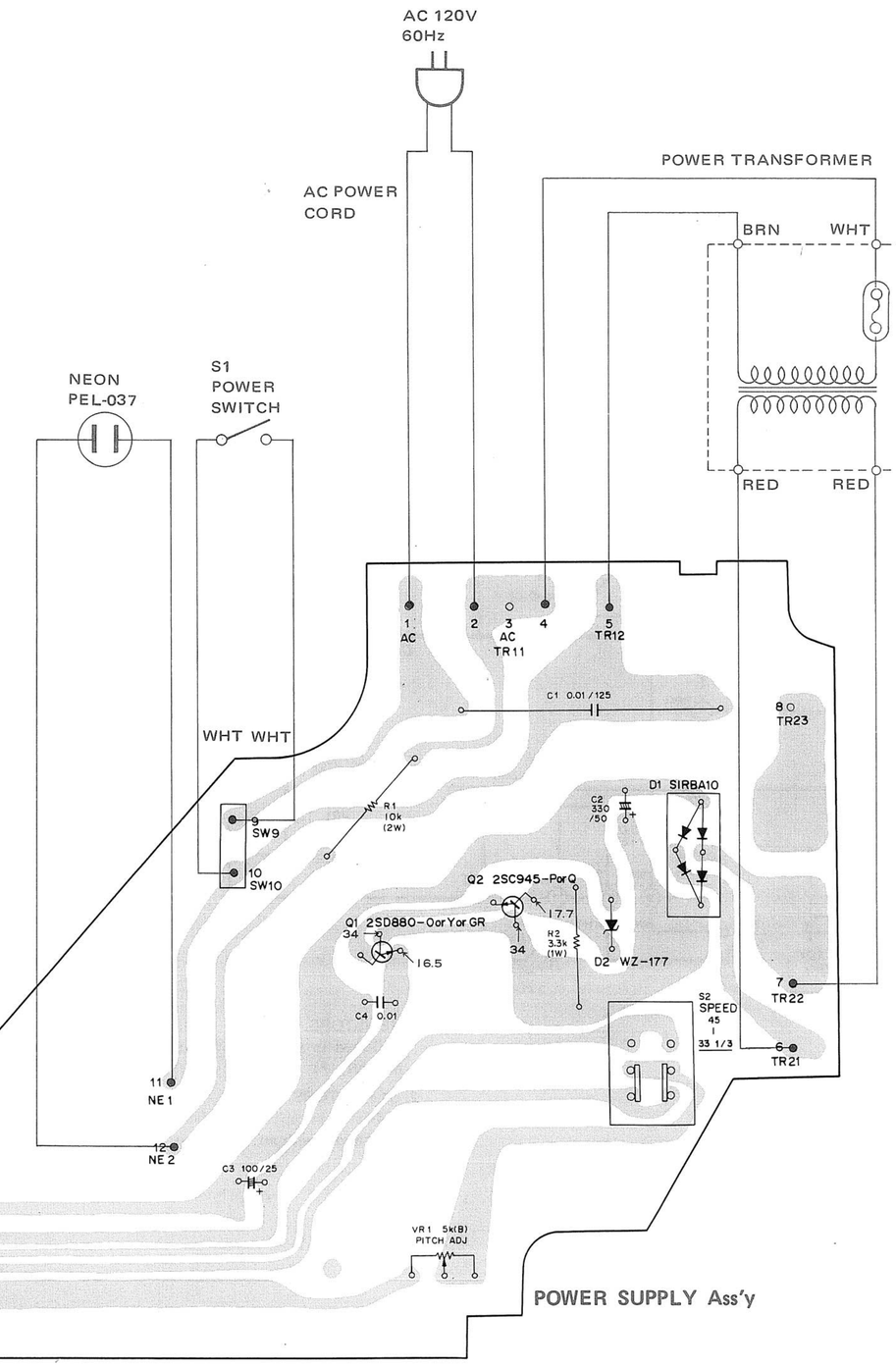

2SC945

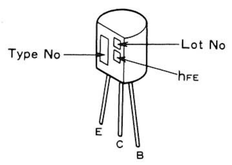

2SD880

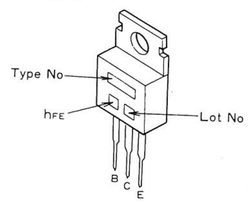

PA2004

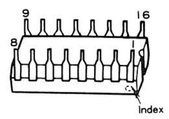

PA2005A

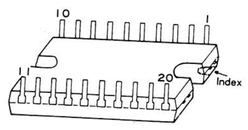

www.vinylengine.com

5. PACKING

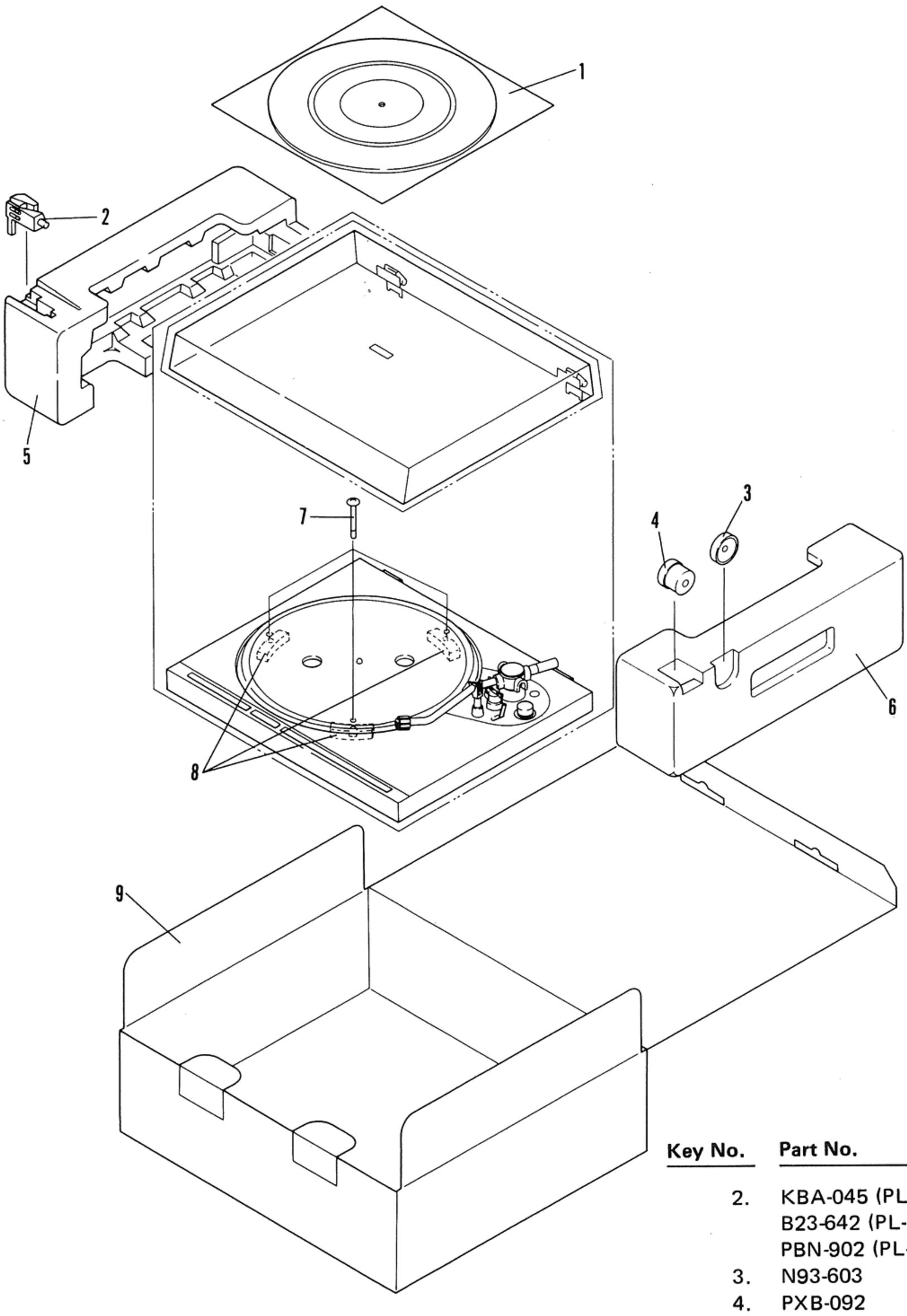

Parts List

Key No.	Part No.	Description
1.	PEB-150 (KCT)	Rubber mat assembly
	PEB-152 (KUT, KU)	
2.	PXA-792 (PL-200)	Headshell assembly
	PXA-791 (PL-200X)	
	PXT-941 (PL-200X)	Cartridge assembly
2.	KBA-045 (PL-200X)	Cartridge mounting screw
	B23-642 (PL-200X)	Cartridge mounting washer
	PBN-902 (PL-200X)	Cartridge mounting nut
3.	N93-603	45 adaptor
4.	PXB-092	Weight assembly
5.	PHA-107	Side protector L
6.	PHA-108	Side protector R
7.	PBA-100	Screw
8.	PNX-064	Tutntable protector
9.	PHG-387 (PL-200/KCT)	Packing case
	PHG-386 (PL-200/KUT)	
	PHG-388 (PL-200X)	
	PRB-141 (PL-200)	Operating instructions
	PRB-142 (PL-200X)	
	PXB-125 (PL-200)	Cartridge mounting screw assembly
	H56-603	Vinyl bag

www.vinylengine.com