I'm Not Larry ® Music

Understanding and Configuring Your G-System

Solving Problems and Getting the Best Sound for Your Rig

Laird Williams

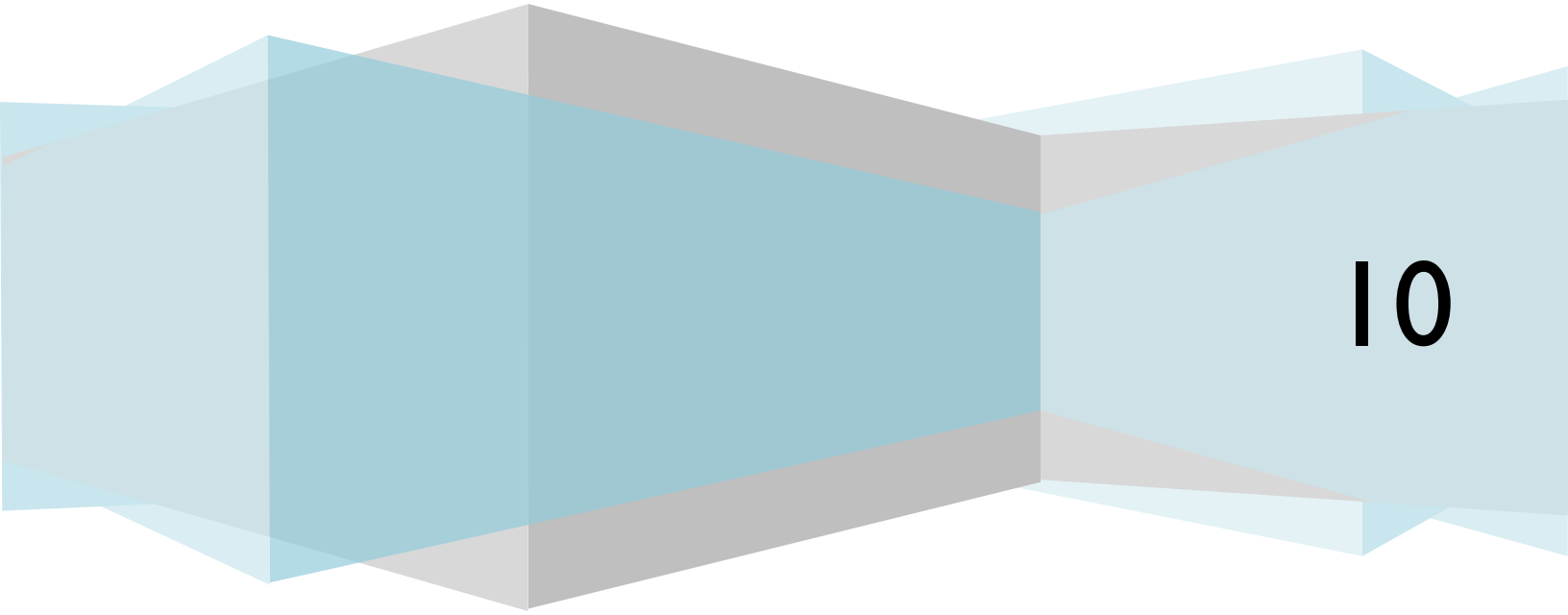

10

Copyright © 2010, I'm Not Larry Music

FORWARD

The G-System is a complex piece of equipment. When I first acquired mine, the product was fairly new and I spent weeks muddling around trying to make things work well. There were no user forums hosted by TC Electronic as there are now, and for a long time little was said about the G-System on independent forums like TGP (The Gear Pages) and others. I was pretty-much on my own for a while.

I am an engineer though. My "day job" is as a Software Engineer and I also build amplifiers with an RF Engineer friend of mine here in Raleigh, NC. I am all about problem solving. I did my Master's Thesis on formalizing and automating models of fault diagnosis. I also designed and built the live sound environment for our church, and do the sound recording and engineering for our local high school band. Most importantly, I have played electric guitar for the better part of 15 years, and guitar in general for over 35 years. One would expect that, having such a broad background in music and technology, one could figure out the G-System to some degree on one's own. Equipped with the very-incomplete G-System manual and my own enormous ego to feed, this is what I have endeavored to do.

I have managed to make the G work very well in both setups that I use – a studio/rack setup that features the G mated with a VHT Valvulator GP3 and a "live rig" that mates the G with a Hughes and Kettner Switchblade 212 Combo. Over time, the emphasis of my activities has shifted from making my own system work well to helping others get the G to work well.

This paper is a summary of what I have learned so far about configuring the G-System for different environments. It collects and digests not just my own direct experiences, but those of numerous other users who have made their trials and triumphs public so we can all learn from them. In many cases, I have been able to provide help over the phone, through e-mail, or in on-line forums. In others, folks have worked things out on their own. In a few cases, folks gave up and "eBayed" their units. We can learn a lot about the G from all of these people's experiences if we maintain a balanced, rational outlook and reasonable expectations.

This paper is NOT a "how to program the different effects" in the G-system paper. It is not about any bugs that may be present in the spill-over algorithms or FX code that the DSPs run. It is more about how to keep as much of your playing dynamics as possible and maintain a good-to-excellent signal-to-noise ratio in the G-System. It also touches on MIDI and channel switching. In some cases, I try to provide background so you can understand the underlying concepts and why things happen and why certain solutions tend to work and others do not. In short – this paper is about integrating your gear – getting it all to work together well, using the G-System as the integration point.

You'll also be able to see why some of the "diagnoses" given by some folks on-line are complete nonsense. Note that I am not asserting that their ears are bad and they are imagining

a problem. I am saying they hear a real problem, but they can't diagnose their way out of a paper bag. Be glad these folks are not your family doctor. You'd be dead. At times I get a little "preachy," especially about engineering principals. Please forgive me in advance. I have tried to make clear distinctions between fact and opinion so you can judge for yourself. Frankly - if you don't like my style that's too bad. It's not as though I am getting any tangible benefit from doing this.

Good luck and remember: Your guitar, G-System, Amp – they are not life-support systems. If they don't work instantly the way you need them to work, nobody dies. Relax, be patient, and most importantly have fun. This really is pretty cool stuff.

Laird Williams
October, 2008

REV. 2 FORWARD

It has been some time since this document first appeared. Since that time, a number of people have used the document and have made suggestions for how to improve it. We have also, as a community, learned a lot more about the G-System. Much of this new knowledge is embedded in the TC Electronic discussion forums – squirreled away in old and new threads, some of which require a lot of "prospecting" on the part of the reader to find the information he needs. As a consequence, I have taken up the development of a second revision of this document to incorporate as best I can what we have learned since the last release. This includes revising old content to make it more accurate (there were some mistakes, which should come as no surprise), as well as adding new content – specifically around amp switching, MIDI, and Volume/Expression pedal integration. My own rig has evolved – especially my studio rig. MY excellent VHT GP3 Amp blew out at one point, and I replaced it with an Egnater M4 preamp. In doing so, I too learned more about the G-System.

This paper can be a little bit abstract, since I attempt to make it applicable to most amplifier setups that one would use with the G-System. In the spirit of making things more accessible, I have also added a section that contains two sample configurations. The samples reflect the configurations I use with my own gear (Two G-Systems) at the time of this writing.

This document is intended to be used with G-System software 4.0. All of the background and basic principles, and many of the specific instructions apply to earlier releases – but you will have to filter this information. For example, the KillDry feature was added in 4.0. If you are using 3.0, then you don't have this feature. Use your head and things will still make sense.

ACKNOWLEDGEMENTS

This edition of the paper requires a few specific acknowledgements.

Jim Basara of Guitar Affair (www.guitaraffair.com) has served as unofficial editor for this work. He has been over every word and diagram in this paper (often in multiples), and has provided numerous (pages of) comments on everything from typos and cut/paste errors to clarifications and outright corrections. While any errors or issues that remain are my own, Jim's efforts have made this paper immeasurably better.

A few frequent TC Electronic forum users deserve mention here too. I have really enjoyed interacting with Christian ("Elfredoo") Vedder and Brendan ("Elvis") Whelan, who frequently throw out good ideas and thoughts that eventually lead to enhancing my own understanding of the unit. I love brainstorming, and these two often present ideas that really get me thinking. They also help prevent me from going insane by answering some questions so I don't get stuck doing it all the time. The TC forums are user-to-user forums, so it is not reasonable (nor rational) to expect TC to step in all that often, other than as referees. Having a good forum is up to all of us, and success is dependent on the generosity of people like Elvis and Elfredoo to participate even though they don't really need the support themselves any more.

Finally, I have to acknowledge all the users who, despite my sometimes feisty nature, have not been afraid to ask the "stupid" questions. Even when I do know the answer, and even when I get frustrated when these folks do not understand the answers, I learn a LOT about how (and how not) to explain things about the unit through these discussions. This is valuable. (Although I DO wish folks would use the search function more ;-)

Laird Williams
September, 2009

CONTENTS

Forward iii

Rev. 2 Forward iv

Acknowledgements v

Section 1: Breaking Things Down *1*

1.1 Reductionist Thinking 1

1.2 A Configuration-Oriented Reductionist View of The G-System 2

1.2.1 Signal Level Control Points in the G-System 3

1.2.1.1 The Boost Chimera 4

1.2.1.2 Signal-to-Noise Principals 4

1.2.1.3 What Means "Louder" on the G-System? 5

1.3 ElectroMagnetic Interference (EMI) 5

1.3.1 Where does EMI come from? 5

1.3.2 How does EMI become noise in my rig? 6

1.3.2.1 Ground Loops 6

1.3.3 5 Ways to reduce EMI noise in your guitar rig 7

1.3.3.1 Shielding 7

1.3.3.2 Filtering 7

1.3.3.3 Gating 8

1.3.3.4 Cancellation 8

1.3.3.5 Breaking the Loop 10

1.3.4 Prescription for Controlling Noise With the G-System 10

1.4 A Configuration-Oriented Reductionist View of Your Amp 11

1.4.1 Key Components of Your Amp 11

1.4.2 FX Loops and the G-System 12

1.4.2.1 Rack Systems and FX Loops 12

1.4.2.2 Why Parallel Loops and Digital FX Generally Do Not Mix Well 13

1.4.2.3 Loop Delay and Phasing Artifacts 14

1.4.2.4 Modulation FX and Parallel Loops – A Match Made in Hell 15

1.4.2.5 Sometimes "Serial" Ain't So Serial, and 100% is Only About 80% 15

1.4.2.6 *How To*: Test Your Amp's Loop 16

1.4.2.7 Loop Impedance and the G-System 17
1.4.2.8 Loop Signal Levels and the G-System 19
1.4.2.9 Summary on Amp FX Loops and the G-System 20
1.4.3 Key Signal-Level Control Points in Your Amp 20
1.5 Configuration Options, or "How Many Cables?" 21
1.5.1 Putting the Whole G-System Before the Amp: 2-cable Configuration 21
1.5.2 Putting the Whole G-System in the Amp's FX Loop: 3-cable Configuration 22
1.5.3 Splitting the G in Half: The "Four-Cable" Method 23
Section 2: Configuring The G-System Signal Path 24
2.1.1 The First Decision – Should I Rack My Brain? 25
2.1.2 Before You Connect the G-System to Your Amp 26
2.1.3 Preparing Your G-System for Configuration 27
2.1.3.1 How To: Set the Input Source 28
2.1.3.2 *How To*: Turn Off the Boost 28
2.1.3.3 *How To*: Turn On the Insert Loop 29
2.1.3.4 *How To*: Bypass All of the G-System FX 30
2.1.3.5 *How To*: Set Initial Signal Levels 30
2.1.3.6 *How To*: properly Configure KillDry 31
2.1.4 Configuring the G-System "Back End" 31
2.1.4.1 Wiring 31
2.1.4.2 *How To*: Prepare Your System for Hookup 32
2.1.4.3 *How To*: Connect The G-System to the Amp's FX Loop 32
2.1.4.4 *How To*: Set and Diagnose the Loop Levels 34
2.1.4.5 *How To*: Solve Signal-Level Problems in Your Loop 35
2.1.4.6 *How To*: Address a Significant Loss of Timbre in the Back End 36
2.1.5 Configuring the G-System "Front End" 36
2.1.5.1 Wiring 36
2.1.5.2 *How To*: Connect the G-System Front End 37
2.1.5.3 *How To*: Address a Significant Loss of Timbre in the Front End 38
Section 3: Controlling Your Amp and Nova Drive From the G-System 40
3.1 Relay Switching With the G-System 40
3.1.1 About Relay Switches 40

3.1.1.1 Relay Switch Delay 41
3.1.1.2 G-System Relay Switching Model 41
3.1.1.3 A Concrete Example 43
3.1.1.4 Controlling a Single Relay 44
3.1.2 Amp-Specific Notes on Relay Switching 44
3.1.2.1 Mesa Boogie Amps 44
3.1.2.2 Special Connectors 44
3.1.3 Configuring Switching 45
3.1.3.1 *How To*: Select Relay configurations for a given patch 45
3.1.3.2 *How To*: Reprogram a button to switch between Relay configurations 45
3.2 MIDI and the G-System 46
3.2.1 MIDI Basics 46
3.2.1.1 MIDI Channels 46
3.2.1.2 Program Change Messages 46
3.2.1.3 Bank Select Messages 47
3.2.1.4 Continuous Controller Messages 48
3.2.1.5 MIDI Cables and Connectors 48
3.2.2 The G-System's Highly-Focused MIDI implementation 49
3.2.2.1 Messages Sent On Patch Change 49
3.2.2.2 Messages That Can Be Sent By Pressing a Button 52
3.2.2.3 Limited Inbound MIDI Implementation 52
3.2.3 Configuring The G-System to Control an Amp Through MIDI 53
3.2.3.1 *How To*: Set Up Basic MIDI Communication 53
3.2.3.2 *How To*: Use MIDI Learn for Non-Mapped MIDI Program Changes 54
3.2.3.3 *How To*: Configure MIDI Program Mapping 54
3.2.3.4 *How To*: Reprogram a Button to Send a MIDI CC Message 55
3.3 Using the G-System with the Nova Drive Using the Y-Cable 55
3.3.1 MIDI Considerations for the Nova Drive and G-System 55
3.3.1.1 MIDI Sysex Messages 56
3.3.1.2 Why Use the "Y-Cable" Rather Than a Standard MIDI Cable? 56
3.3.1.3 The Nova Drive Heartbeat 57
3.3.2 Configuring the Nova Drive 58
3.3.2.1 *How To*: Configure Nova Drive MIDI When Using the Y-Cable 58

3.3.3 Connecting the Nova Drive Using the Y-Cable 59
3.3.3.1 *How to*: Connect the Nova Drive When NOT Using MIDI For Anything Else 59
3.3.3.2 *How To*: Connect the Nova Drive When Your Amp Has a MIDI Thru Jack 59
3.3.3.3 *How To*: Connect the Nova Drive When Your Amp Does Not Have a MIDI Thru Jack 59
3.3.4 Nova Drive VS G-System Patches and Patch Numbers 60
3.4 Using the G-System with the Nova Drive Using A Standard MIDI Cable 61
3.4.1 Complications When Switching Both an Amp and the Nova Drive 61
3.4.2 Viewing the Nova Drive as a Preamp 61
Section 4: Using Volume and Expression Pedals 63
4.1 Important Background on Volume and Expression Pedals 63
4.1.1 Volume Pedals vs. Expression Pedals 63
4.1.1.1 What Signals Typically Pass Through a Pedal? 63
4.1.1.2 Of Perception and Potentiometers 64
4.1.1.3 Pedal Connectivity 64
4.1.2 Pedal Impedance 65
4.2 How the G-System Uses Pedals 66
4.2.1 G-System Volume Pedals are Used Like Expression Pedals 66
4.2.2 Plugging Pedals In 67
4.2.3 Understanding Volume Position 67
4.3 Configuring Volume and Expression Pedals 68
4.3.1 Starting Off On the Right Foot 68
4.3.1.1 How To: Prepare the G-System for Volume Pedal Configuration 69
4.3.2 Connecting Pedals Properly 69
4.3.2.1 *How To*: Connect a Volume Pedal to the G-System 69
4.3.2.2 *How To*: Connect an Expression Pedal to the G-System 70
4.3.3 Configuring Pedals For Volume Control 70
4.3.3.1 *How To*: Use a Volume Pedal to Control Volume 70
4.3.3.2 *How To*: Use an Expression Pedal to Control Volume 71
4.3.3.3 *How To*: Set the Volume Position 71
4.3.4 Configuring pedals for Expression Control 71
4.3.4.1 *How To*: Use an Expression Pedal to Control Expression 72
4.3.4.2 *How To*: Use a Volume pedal to Control Expression 72

Section 5: Sample Configurations *73*
5.1 Mobile Rig With Combo Amp 74
5.1.1 Equipment 74
5.1.2 Cabling 75
5.1.2.1 Signal Cabling 76
5.1.2.2 Control Cabling 76
5.1.3 Configuration 76
5.1.3.1 G-System Global Levels 76
5.1.3.2 Amp Loop Settings 76
5.1.3.3 MIDI Switching 76
5.2 Studio Rig 77
5.2.1 Equipment 78
5.2.2 Cabling 80
5.2.2.1 Pedalboard 80
5.2.2.2 Rack 82
5.2.3 G-System Configuration 84
5.2.3.1 Global Levels 84
5.2.3.2 Utility 84
5.2.3.3 Relays 84
5.2.3.4 MIDI 84
5.2.3.5 Pedals 84

SECTION 1: BREAKING THINGS DOWN

The one thing I can say with very high confidence is that if you purchase a G-System, connect it like the manual says, and start playing – you are probably going to be *very* unhappy with the results. This is a shame, because the G-System is a very well-built and conceived system. It is just a complex one, and it is nowhere near to "plug and play." This is not to say that the G-System is perfect. There are some significant issues – but many can be mitigated with minimal investment. Others can be solved in firmware releases. And some issues are common in any complex audio environment and not necessarily confined to the G-System.

1.1 REDUCTIONIST THINKING

Trying to understand and configure a complex system all at once is a nightmare. Fortunately, successful scientists and technologists have used a method for centuries (even millennia) that makes working with certain types of complex systems easier. It is called "reductionism". You break the system down into its pieces, understand those, and then how the pieces interact, and you achieve a pretty good understanding of the system. Reductionism does not work very well for gestalt systems (where the whole is greater than the sum of its parts), like understanding a work of art or human consciousness – but it works *great* for technology. You may be an artist, and you may not like the reductionist world view, but all of your gear is technology and thinking like a reductionist when addressing your gear will make things much easier on you. This is called "applying the right mental tool" to the job at hand. You can apply your other, more pleasant mental tools to other jobs – like making the refrain in that new song you are writing more compelling.

Part of being a reductionist is being disciplined about "isolating variables." What this means in terms of the G-System is that we try to isolate individual components and configure them without involving any of the other components. This is an ideal, and in some cases components that are irrelevant to the task have to be included. In such cases, these "ancillary" components should be put in a known, reliable configuration and not varied during adjustments and experiments. In other cases, two components interact so heavily that we have to vary both. In such cases, when things don't sound or behave properly, we can't know whether it is the first or second component (or both) that are the cause of the issue. This is when things get frustrating, so we try to avoid it as much as possible.

The other part of being a reductionist is that you have to either discover or know what the components are so you can isolate them. Fortunately, TC Electronic has given us a fairly good start at understanding the G-System. The only issue is that this information is scattered all over the place in the manual. Here's what you get when you finally put it all together.

1.2 A CONFIGURATION-ORIENTED REDUCTIONIST VIEW OF THE G-SYSTEM

We've all seen this block diagram. It is plastered on the front of the GFX-01 and also in the documentation. It is a nicely-reductionist view of the signal path in the G. Each block in this diagram represents a specific G-System function. ("AD" represents "Analog to Digital Conversion and "DA" represents digital to analog conversion).

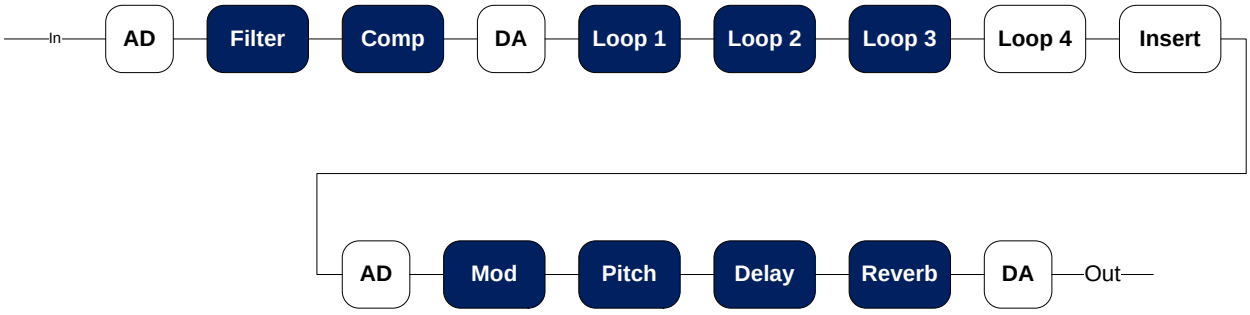

This view (and its related variations for FX routing options) is great for understanding the effects in the system and how they will interact. When you are trying to program effects to get a certain sound, it is the right way to think about things. But this is a lousy diagram for understanding signal flow from the standpoint of integrating your G-System, guitar, and amp. In some respects it shows too much detail, and in others it is missing some critical information. In short – it simply shows the wrong information for *setting up* the G.

If you squint your eyes a bit, you will see that the G-System is really composed of three major sections: two digital sections (each digital section starts with AD and ends with DA) with an analog loop section sandwiched in-between them. We will learn later that the insert loop on the G-System is special, so we will call it out as a separate component.

Thinking this way, we have a good start at breaking the G down into manageable pieces, which you can see in the next diagram. It needs information added, as we will see in a minute. But for integrating with your amp, this is the way you need to start thinking about the G-System:

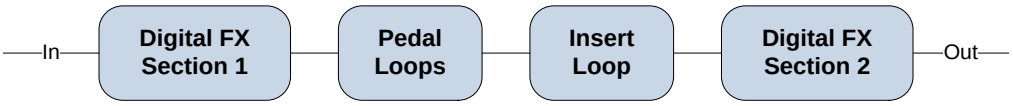

You will note the following. First, there are two digital sections, one for pre-gain digital effects (Filter, Compressor, etc.) and one for post-gain digital effects (Modulation, Delay, etc.). All of the other pieces are analog. The pedal loops are analog. The insert loop is analog. There are no digital-to-analog or analog-to-digital conversions in these areas – period. This also explains why the pedal loop routing is so inflexible. It is wired, not programmed on a DSP. Hence, it is a lot harder to change the order of these components. If the G lived entirely in the digital domain all the time, and did DA-AD conversions every time something went off-board, then it would be easy to change the order here – but that's not how the G works. The loops are analog, true-bypass, physically-switched, wired (Ok – Printed-Circuit-Board-traced) loops.

> *Side note: This also means that, if you have a pedal in a loop and you don't like the sound, it is not because of the (imaginary) digital conversion on the loops. Blaming loop-related issues on loop DA in the G is a bit akin to blaming the crackers in your bed on the (also-imaginary) trolls that live under it.*

You will recall that, earlier, we mentioned that the insert loop is "special", so we chose to call it out separately from the other loops. This is because, in "four-cable" configuration as recommended in the manual, the "Insert Loop" effectively becomes the preamp section of your amp. This means that Digital FX Section 1 and the pedal loops (Loops 1-4) are PRE-gain (between the guitar and the amp input) and the second digital FX section is POST-gain (probably in you amp's FX Loop).

1.2.1 SIGNAL LEVEL CONTROL POINTS IN THE G-SYSTEM

The problem with both pictures above is what they do not show – the places where signal levels can be manipulated within the G-System. Understanding the following is vital to understanding the G.

1) Where signal levels can be controlled.
2) In what manner (amplification, attenuation) they can be controlled.

The following diagram expands the picture from the prior section to include critical control points on the G-System:

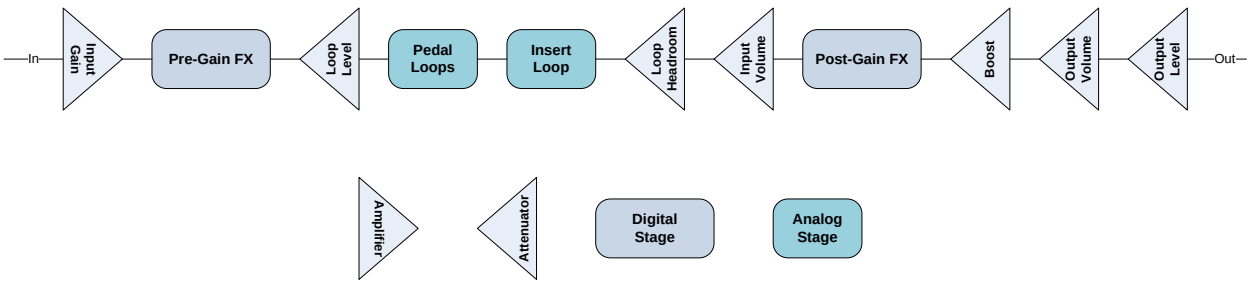

You'd probably be surprised to notice that there is only one amplifier, at the input. All the other signal level adjustments are about if and how much you attenuate the signal (make it quieter). They have no mechanism for amplifying the signal. This will become very important later.

1.2.1.1 THE BOOST CHIMERA

This preceding diagram generates a lot of questions. The most common would be "hey – I thought the boost made things louder – but you have it as an attenuation stage and not an amplification stage." You're right, I do. The "boost" on the G is a "politician". You know politicians – when they are reducing a planned 25% increase in your taxes to a 20% increase – they call this a "Tax Cut". Never mind that your taxes are still going to go ***up*** by 20%. This is the inverse of what the boost on the G does. When you set the boost max on the G, it *attenuates* the signal by that amount. Then, when you hit the boost button to engage the boost, it gives what it took away back to you – and no more.

The G-System boost can be very useful for making it easy for you to make your playing louder and softer on a song – but it hardly qualifies as a "boost". And its location in the signal path means that engaging the boost will only make things sound "louder". It won't impact gain at all. The point? Firstly, the G-System boost is no replacement for a good boost pedal or a switchable boost feature on a good amp. Secondly, it has a detrimental effect on signal-to-noise ratio in the connection from the G-System to the power amp. Thirdly, it complicates configuring the G.

If you have a good boost pedal or boost mode on your amp, or a switchable secondary master volume, or pretty much anything along those lines, you probably don't need the G's boost at all. *And you certainly do not need it while configuring the G-System*. Turn off the boost and lock it off (more on that later) while you do configuration and set signal levels. You can turn it back on later if you want to.

1.2.1.2 SIGNAL-TO-NOISE PRINCIPALS

The other issue is signal-to-noise ratio. When you have a very quiet signal, it does not take much noise to make it sound – well – noisy. If you have a nice loud signal a little noise gets washed out. This is why audio equipment specs always talk about signal-to-noise *ratio*. The higher the signal is relative to the noise, the better things will sound. You can certainly raise your signal-to-noise (s/n) ratio by keeping noise down to a minimum – and you should. (We'll talk about ways to do that later). But remember grade-school arithmetic. There are *two* ways to increase the value of a fraction (a ratio). The first is to reduce the size of the denominator – and that is what you are doing when you keep noise under control. The second is to increase

the size of the numerator. This means keeping your actual signal levels as high as you can (without clipping – which adds really ugly noise). Freely-translated, in most installations you should be able to set most (but not all) of the levels in the G-system to their "loudest" settings (least attenuation). You can then use a volume pedal to control these for swells and such later on. This is a general principal, and we will break it under certain circumstances…but keeping the G's attenuation levels at or near 0db will maximize s/n ratio. Coupled with a disabled boost, minimized loop headroom, and properly-set input gain, you can get a very high s/n ratio out of the G-System, as well as excellent dynamic range and responsiveness.

1.2.1.3 WHAT MEANS "LOUDER" ON THE G-SYSTEM?

One of the subtleties of working with the G-System is that the different attenuators use different units and scales to signify volume. On some level settings, 0 is the loudest setting. On others, 0 is mute. Some are measured in decibels (dB), others have no units at all. This can be confusing – so here is a table that helps you know, for each level, what the maximum and minimum values are and how to interpret them. And remember, *more* attenuation means *less* volume.

Name	**Units**	**Loudest Setting**	**Softest Setting**	**Comment**
Input Gain	dB	18dB	0dB	0dB = no amplification. Not usually good.
Loop Level	dB	0dB	10dB	0dB = no attenuation
Loop Headroom	dB	-2dB	-18dB	-2dB = minimal attenuation
Input Volume	None	0	100	Think of this as % attenuation, where 100% attenuation = mute
Boost Max	dB	0dB	12dB	0dB = no attenuation
Output Volume	None	0	100	Same as input volume
Output Level	dB	0dB	-100dB	0dB = no attenuation

1.3 ELECTROMAGNETIC INTERFERENCE (EMI)

Electro-Magnetic Interference (EMI) in this context refers to the soup of radio waves that surrounds all of our gear (and us) all of the time. If you are a guitarist, you hate EMI, and you need to be downright aggressive about controlling it.

1.3.1 WHERE DOES EMI COME FROM?

EMI can originate from planned emissions, such as TV/radio broadcasts, wireless LANs, and phones. It can also originate from unplanned emissions from the electronics in your home including light bulbs, dimmers, appliances, other electronic equipment, (and even just the AC wiring in your house). Fluorescent lighting, ceiling fans, and dimmer switches are especially bad.

There are also natural emissions (from the sun, lightning, certain animals/fish…). *All* electronics emit EMI to some degree.

1.3.2 HOW DOES EMI BECOME NOISE IN MY RIG?

All it takes to turn EMI into sound is to have an antenna hooked into your signal path somewhere. That piece of metal will respond to the "stimulation" it receives from the EMI and produce a varying voltage through the principal of induction (the exact same principal by which everything from the huge turbines in power plants to the pickups in your guitar do their work).

The problem is that that in between the guitar input and the speaker there is no "sound". Sound is turned into a varying voltage at the pickup, and converted from a varying voltage in your speakers. There is *no* mechanism by which your gear can distinguish between the varying voltage that is your guitar "sound" and the varying voltage that your "antennae" picked up from EMI. As far as the gear is concerned, it all has equal precedence and is treated the same. It's "all sound". Feed EMI-induced noise from a cable to the input of your amp, and your amp will happily amplify it. Feed the EMI-induced noise from your pickups into a fuzz pedal, and the pedal will happily add harmonics and distortion to the noise, and perhaps amplify it too.

You may say, "Hey dude! I'm no idiot. You say that we need an antenna to pick up these signals, and I certainly have more sense than to hook a set of rabbit ears to my rig". True enough. But *every* piece of metal (especially wire) in your rig is a potential antenna. The longer the wire, the more efficient it is as an antenna. So, what are the longest wires in your guitar rig? The wires inside your amp and pedals are nice and short – and they are shielded by the enclosure (case) in which they live. They don't make very efficient antennas, so they don't tend to cause noise problems. Your cables are nice, long wires, and can be very efficient antennas. So can the very long bits of wire wrapped around the magnets in your guitar pickups. (Find an old, dead pickup and unwind one of the coils sometime. Have a few beers handy, and some time available). Even the 22"-25" strings on your guitar are potential antennas.

1.3.2.1 GROUND LOOPS

Antennae are not directional. They can just as easily transmit (give off) signals as they can receive them. If you have two wires running next to each other for a distance and one of these wires has a strong signal passing through it, then it will actually transmit that signal to the other wire. This is what happens with ground loops. If AC ground is connected to itself by a loop of wire, all the noise on the AC ground can pass through that loop. If there is a signal wire running next to part of that loop, it will pick up the noise and pass it on.

The problem is that ground loops are disturbingly-easy to create by accident. If you have two devices connected to AC power and then connect them with an audio cable, you can create a ground loop that has your cable shield as part of the loop. This is a problem, since the cable

shield in an audio cable runs parallel to the signal wire in the cable. Thus, when you have a ground loop and a ground signal, it will get transmitted to the audio signal wire and make noise.

Ground signals vary from location-to-location, so the presence of a ground loop is no guarantee of a noisy rig. But it also means that your rig may be quiet at home – but then you go to a gig where the RF environment is ugly and it will hum like mad. The most intelligent thing to do is to prevent ground loops from forming at all.

1.3.3 5 WAYS TO REDUCE EMI NOISE IN YOUR GUITAR RIG

There are several ways you can prevent or kill EMI noise in a guitar rig. Many rigs use all of these methods. Most use more than one. These are shielding, filtering, cancellation, and (in the case of loop antennae) breaking the loop.

1.3.3.1 SHIELDING

This is the simplest way to reduce EMI. Remember that all electrical energy likes to follow the path of least resistance to ground. Suppose you were to create a conducting metal tube and tie it to ground. That tube would act like an antenna and absorb much of the EMI surrounding it and send that signal straight to ground. Now put a wire inside the tube. It probably won't pick up much energy from EMI, since the tube is absorbing it.

This is the principal behind a shielded cable. A well shielded cable has an outer "tube" (often fine woven wire) tied to ground that absorbs EMI so that it can't reach the inner wire. Essentially, the outer tube is an antenna. Simple, right? Except the longer the cable run, the less like a "path of least resistence" the shield itself looks, and the more EMI "leaks" into the signal-carrying cable. Net: cable shielding is very important, but is only really effective over short distances. 10' or so is a reasonable max. Go to 20' or more and you really need to do something in addition to your shielding.

1.3.3.2 FILTERING

You can always try to remove the interference from the signal path after the antenna picks it up. One would expect this to be a bad solution, since it has the potential to interfere with the actual signal, and in some cases it is. What about audible frequencies that your guitar does not produce? Couldn't you safely filter those out without interfering with your guitar? Yes you can, and the input circuit on your amp probably already does this. Most of them roll off frequencies below a low C or D at the input. Sort of by definition, anything below these frequencies was not produced by your guitar and is noise. This kind of simple filtering has been part of guitar amp design since the earliest days.

Another place where filtering can work, with some side-effects, is in removing unwanted pickup noise, especially from single-coil pickups. Products like ElectroHarmonix's HumDebugger do this. Impact on tone varies from guitar to guitar.

1.3.3.3 GATING

A noise gate is unusual relative to these other methods. It actually leaves the noise in your signal – until the signal is faint enough that the noise becomes an issue. At that point the gate mutes just about everything.

In a lot of cases, the noise in your rig is only an issue when you are not playing for whatever reason. Maybe you are between songs – or in a 2-bar tacit section in the middle of a song. A gate, essentially, uses signal level to try to guess when you are not playing, and clamps off the signal when it thinks you are not playing.

You can often afford to leave the noise on when you are playing because, when you are playing, the signal level of your playing will often swamp out the noise. You and your audience will not hear the noise over the guitar. But when the guitar stops playing, the noise can be really obnoxious.

There are problems with a gate is that it limits how quietly you can play. It also limits the sustain on a long note, since the gate will cut the signal off when it drops below the gate threshold. The more noise, the higher you have to set the threshold and the worse the problem. It is therefore best to remove as much noise using other methods as possible, and then use the gate for the tiny bit of noise that remains. This will impact your playing dynamics least while giving you excellent quality.

1.3.3.4 CANCELLATION

Cancellation is one of the neatest ways to handle noise. This is actually what you are doing with a balanced link. To understand how it works, you need just a touch of background.

If you took a signal and inverted it, so the all the ups became downs and all the downs became ups, then when you added the original and inverted signals you would get…nothing. After all, -5 + 5 = 0. Fundamentally, this is the principal behind audio cancellation. Your noise-suppressing headphones do something similar. They "listen" to the outside noise and then generate an "anti-"signal into the headphones that, when added to the outside noise, sums to zero noise. All that remains is the audio signal to which you really want to listen. This technique is imperfect, but effective.

Imagine that you have a piece of equipment that can send BOTH its output AND an inverted copy of that output down two different lines. Summing those lines at the receiving end would result in silence. Now, think about it. Those lines are running together so they will pick up

(almost) the same interference. Finally, imagine that the far end does not simply sum the inputs. Instead, it re-inverts the inverted input, putting it back to being a copy of the original and then sums the two. By doing so, it also INVERTS the RF noise on one line, so that when the signals are summed, the RF noise cancels itself.

If we call "N" noise, and "S" signal and I() the inversion function, and the signal is split, where half is left in phase and half is inverted then:

- Line1 as sent = ½S
- Line2 as sent = I(½S)
- Line1 as received = ½S + N
- Line2 as received = I(½S)+ N
    - Notice that line2 receives the SAME noise as line1
    - The noise is not inverted yet because the initial signal inversion took place BEFORE the noise was picked up
- I(Line2 as received) = I(I(½S)) + I(N) = ½S + I(N)
    - Now we take the inverted line and "uninvert it", which inverts ONLY the noise on that line
- Line1 + I(Line2) = (½S + ½S) + (N + I(N)) = S + (N + I(N)) = S + 0 = S = all signal and no noise

This is what essentially balanced connections do – although again this is a little oversimplified and neither the inversion nor cancellation is perfect.

For longer cable runs, balanced connections are a must, since they can cancel out almost all noise that escapes the shield and is injected into the signal.

The catch is that BOTH ends of a balanced connection have to be balanced. The sending end has to split the signal and invert one line properly. There has to be a balanced (2 conductor + shield) cable. The receiving end has to "uninvert" the one line and then re-sum the two lines properly. If ANY one of these three items is violated, you are missing the vast majority of the benefit of a balanced connection.

Most guitar amps do NOT have balanced sends and returns on their loops, so having balanced connections on the G insert return and output(s) is next to pointless unless you have a way to add corresponding balanced connections to your amp. The "pseudo-balanced" circuit that the G creates when using a balanced cable to an unbalanced jack is next to useless. This is not the fault of the G's designers – if the far end of a connection with the G is unbalanced there is little they can do.

What you really need is a way to convert between balanced and unbalanced signals. You take the unbalanced jacks on your amp and use SHORT, well shielded unbalanced cable to connect

to a "magic box" that does the splitting/summing/inversions you need to have done. You then use balanced cable for the longer run to your G-System.

1.3.3.5 BREAKING THE LOOP

So why wouldn't balanced connections stop ground loop hum too? Good question – simple answer. If your SHIELD is acting like a loop antenna, then it is effectively retransmitting everything it picks up. So is anything else connected to your shield, including (possibly) your rack, your chassis, and some of the circuitry inside the amp, pedals, or FX. Your CABLE connections are protected by cancellation, but nothing else is. Although your cabling does not add noise due to a ground loop, it CREATES the loop that helps other components add noise. You see, your cable shield is tied to ground, and so are all your devices. Together, they make one big honking loop (Outlet -> Amp -> Cable -> G-Sys -> Outlet). In fact- if you have two cables you have the potential for two loops – zoiks!

It's a mindlessly simple idea really. A loop antenna stops being a loop antenna when you break the loop. How about that! But what if the loop is your ground? Yeah – some rack equipment has ground lift switches that can do the trick – but most guitar amps do not. Slicing the shield on your cable will do the trick, but will then expose you to other RFI as your cable will pick up more signals due to reduced efficacy of the shielding. What do you do?

Get a box that isolates the ground on each side of the connection. This is what an isolation box like the EbTech HumEliminator does. In addition to breaking the any ground loop between your amp and the G, it also converts between balanced and unbalanced signals.

1.3.4 PRESCRIPTION FOR CONTROLLING NOISE WITH THE G-SYSTEM

An investment in proper cabling and isolation equipment makes a world of difference in noise levels with the G-system. Here are some general guidelines that the configuration section of this paper follows.

1) Attack noise at its source. For example, don't use a gate to filter out noise from ground loop hum. Use an ISO box so the ground loop noise never happens. You may still need the gate for other types of noise – but you will be able to have a much lighter touch with the gate and it will impact your dynamics less.
2) Use *true*, balanced connections for long cable runs.
3) Where it is applicable and you don't want to spend the money on balancing, take advantage of pseudo-balanced connections.
4) Isolate grounds on all audio interconnections.
5) Use well-shielded cables made from high-quality components.
6) Don't forget your guitar as a source of noise. Have a tech optimize its noise rejection/prevention capabilities.

7) If your guitar IS noisy, put a noise gate channel near the guitar in the signal chain. That way, the guitar noise will never get to the fuzz pedal or preamp and get turned into a screaming mess when it leaves the FX loop.

1.4 A CONFIGURATION-ORIENTED REDUCTIONIST VIEW OF YOUR AMP

The relationship between the G-System and your amplifier is very important and, generally, very complex. It is a bit like a marriage. Some amps work very well with the G-System right off the bat and never have a problem. Some combinations need help in the form of buffers, line isolators, level shifters, balanced cables, and other auxiliary items. You have the role of family counselor. For you to know what help is needed, you need to understand both parties in the relationship. The G-System is one party. Your amp is the other party – and it is sometimes just as much to blame (or more so) for problems as the G-System is.

1.4.1 KEY COMPONENTS OF YOUR AMP

Whether you have a combo amplifier, an amp head, or a rack system, the fundamental components are exactly the same. One thing that can differ significantly from model-to-model is the FX loop topology. The FX loop topology of an amp is very important to the integration of the G-System, so we will make the loop an explicit component of the configuration. This is reflected in the diagram below.

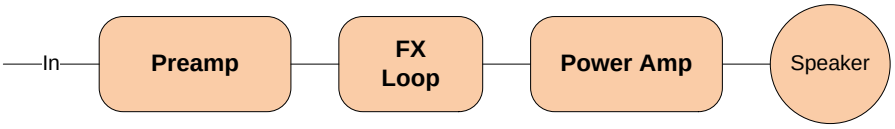

The preamp is often actually several preamps in a switchable configuration. It is responsible for much of the tone and character of an amp. It is here that most (but not quite all) of the amp's effects on tone are generated. The power amp is responsible for taking the signal from the preamp and boosting/transforming it to a level suitable to drive the speaker, which of course produces the sound. On fundamental level, the FX loop simply gives us a way to put things between the preamp and the power amp.

In a "combo amp", all 4 of these components are housed in a single enclosure. In a "head", the first three components are in the head and the speaker is in its own cabinet, connected by a speaker cable. In a rack setup, the FX loop is "virtual" and the preamp and power amp are physically separate, as is the speaker. The only salient difference between these topologies is that in a rack system, the existence of two grounded components and external cables connecting them dramatically increases the probability of different types of Radio Frequency Interference (RFI). Introduction of any complex multi-FX unit in the loop of the amp also

increases the probability of RFI, so once the G is added, there really is no difference between these topologies for our purposes – so we won't address it again – except on one more topic.

1.4.2 FX LOOPS AND THE G-SYSTEM

The G-System is highly-sensitive to the details of FX loop implementation in your amp. Impedances and signal levels, specifically, must be well-matched between the amp's FX loop and the G-System. This section explains why, and what the characteristics are of a loop that will work well with the G-System.

1.4.2.1 RACK SYSTEMS AND FX LOOPS

You may have a rack-based system where the components really are physically separate. That is fine. From our standpoint, however, a rack system is identical to a head, except that the external connection between the preamp and the power amp, which is a cable and can therefore be interrupted, is effectively the same as a serial loop.

Some rack preamps also include an FX loop. The functions of such a loop vary a bit – but most preamps that have a loop have one to enable parallel loop topology – which we will discuss shortly. As you will soon see, from the standpoint of integrating with the G-System, a serial loop is vital to getting good sound – so we will ignore the built-in loop of a preamp for our purposes. There are some occasions (studio applications, front-of-house/back-of-house splits) that might give you reason to use one – but these occasions are rare. Go the TC Forums and ask around if this is how you want to use your preamp. This paper focuses on more common usage – and in most cases the built-in loop of a stand-alone preamp is useless or even detrimental. Believe it or not, one preamp manufacturer even comes out and says so. Check out this quote taken directly from Mesa's manual for their Recto Recording Amp:

"Though the Recto Pre s' EFFECTS LOOP is the best type for a guitar product to preserve the inherent attack characteristic and overall sound quality and no expense was spared in its development, our tests have resulted in some interesting findings. We have had the best sonic and tactile results by actually bypassing the EFFECTS LOOP altogether and patching outboard gear directly between the pre-amp and the power amp with short, good quality cables.

Though this may seem in many ways contradictory to the very concept of - and reason behind - a parallel effects loop...in repeated test situations we found the sound to be more three dimensional and full of punch, body and life than that of the same processing used in the EFFECTS LOOP with equivalent cable lengths. Theoretically (and electronically) this does not make good sense - and in fact should actually cause greater degradation of tone due to the more sensitive impedances present at the MAIN outputs. Nonetheless, being the tone-first-theory-later design team we have come to be, this patching scheme has worked much to our favor. We have long felt this to be true and in fact included this tip in some of our other products' owner's manuals. To verify our findings we recently took a census of TriAxis (Programmable Pre-amp) users among our phone-in customers and touring artists and found that most used their processing between pre-amp and power amp, saving their effects loops for more specific switchable applications. When asked why, in almost every case they said they liked the sound better between the pre-amp and the power amp. So try both ways for your specific application and choose the

one that fits your ears and patching requirements best. There is no right or wrong way to interface processing to your Recto Pre so experiment at will."

[Ed. The Mesa folks demonstrate here, in spades, just how good a group of engineers they really are. Any time you swallow your pride and advise folks to not use a feature that you worked hard to put into a product - because you've decided that there is a better way – is the apex of engineering credibility. And they did not *hide* this advice in a search feature of an FAQ section either – they plunked it right into the relevant section of their manual so any intelligent person who buys (or even investigates) their product will see the advice. That's excellent, proactive customer service.]

1.4.2.2 WHY PARALLEL LOOPS AND DIGITAL FX GENERALLY DO NOT MIX WELL

The one aspect of amp topology that is very important is that there are a couple of different types of FX loops – serial and parallel. A serial loop completely interrupts the signal from the preamp to the power amp. All of the signals passing into the power amp come directly from the FX – none come directly from the preamp. *This is not to be confused with FX routing within the G-System. The two are not related in any meaningful way other than using some of the same vocabulary. Parallel FX routing in the G-system can be very useful. Parallel FX loops on amps, however, are problematic.*

In a parallel loop, there are two paths from the preamp to the power amp, one directly connecting the two components (the "dry" signal) and one that passes through the FX (the "wet" signal). There is usually a way to blend the wet and dry signals to taste before sending them to the power amp.

Parallel loops are great for certain applications. By letting some of the preamp tone pass directly through to the power amp, more of the character of the amp and guitar can be preserved *in cases where the wet side is damaging or masking that tone for some reason, or where the loop is otherwise poorly-designed*. This is especially true when using vintage pedals originally designed for "before the input" applications in a loop. Such pedals color the sound that passes through them substantially, and can sound awful in an FX loop. By mixing the output of these pedals with a dry signal, you can get the effect you want without the tone-coloration side-effects by restoring the original preamp tone with the dry mix.

But such a loop can only work well under the assumption either that the wet signal contains no dry component (i.e. the FX in the loop don't mix any dry signal), or that the dry component of the wet signal and the dry signals are *perfectly* in-phase, and thus mixing them will not produce any odd artifacts. It also is only worth the trouble if there are tone coloration issues with your FX. Modern digital FX units like the G-System break ***both*** of these assumptions.

Unfortunately, putting digital FX on the wet side of a parallel loop makes for some ugly problems. If you have ever heard a vintage guitar nut complain that this-or-that digital delay sounds "too hi-fi", it is probably because he or she expected it to have the same tone-color issues as a vintage delay pedal and put it in a parallel loop to compensate. This is not terribly

competent electronics, but guitarists are not engineers so it is a very understandable mistake. They use a parallel loop to make the over-all sound more hi-fi, but the digital delay most likely already ***is*** hi-fi – so why bother with the parallel loop? In fact – as you will see – using the parallel loop makes things a ton worse.

1.4.2.3 LOOP DELAY AND PHASING ARTIFACTS

The other, much bigger problem is that digital FX necessarily delay the signal passing through them. (Other types of circuits can also delay the signal – but digital always delays it.) You will not hear this delay directly. It is only on the order of a few milliseconds and the human brain is outstanding at realigning slightly-mismatched temporal stimuli. (In fact, we would not even be able to distinguish between different timbres were this not the case.) If there is a bit of delay between when you pick the strings and when you hear the results, you won't notice. Your brain corrects the issue without you even noticing. Ok – so what's the problem then?

The problem comes when electronically mixing that ever-so-slightly delayed signal with a signal that was not delayed – like the dry signal in a parallel loop. In this case the peaks and troughs of the waves don't line up exactly. If your digital FX unit introduces a miniscule 1ms (1 one-thousandth of a second) of delay, then it will arrive at the power amp 1ms later than the dry signal. This is a sonic nightmare. When the signals are re-summed, you get all kinds of artifacts including phase-shifter-like effects and even frequencies that were not present in the original signal (aliasing). It all adds up to lousy tone.

If 1ms sounds like a discrepancy too miniscule to hear, please note that recording engineers spend hours realigning signals that are out of phase by fractions of a millisecond. A single millisecond of phase delay produces artifacts that are at fairly high pitches, but well within the human hearing range. These artifacts can completely suck the high-order harmonics out of your guitar tone – making it flat and lifeless. I record a lot of acoustic guitar with one mic about 2'3" farther from the guitar than the other. The net is that sound arrives at the second mic almost exactly 2ms after it arrives at the closest mic. If I don't realign the signals (by deleting the first 2ms of the track for the more distant mic) my recording sounds ok, but it loses a lot of life. If I realign the signals, I get beautiful, 3-D sounding results. And that's only 2ms.

There are ways for digital FX to compensate for this problem. Some FX (Including the G-System as-of firmware release 4) have a kill-dry feature that allows you go configure the FX unit to never mix dry signal internally. If your amp has a parallel loop, then you should be prepared to take advantage of this so you can avoid phasing problems with your tone. But KillDry is no Panacea. You lose the ability to vary the ratio of wet and dry signal on a patch-by-patch basis. The G-System can mix your wet and dry signals, and can do so in a more flexible manner with good fidelity, so avoid using a parallel loop if you can.

1.4.2.4 MODULATION FX AND PARALLEL LOOPS – A MATCH MADE IN HELL

Parallel loops were also primarily designed with reverbs and delays in mind. In these applications, there is almost always a fair amount of dry signal in the mix, and it is practical to expect that using the same wet/dry mix for everything. But what about modulation FX? The sad fact is that many modulation FX only sound good when they are 100% wet. In other cases, depending on the modulation effect, you end up wanting different ratios of wet/dry for different sounds. How do you do this with a parallel amp FX loop? You do one of the following:

a) Walk back to the amp and (re-re-re-re) adjust the amp's wet/dry mix between every song.
b) Give up and live with anemic-sounding flangers and choruses.

Both of these problems, of course, are non-issues when you put modern digital FX in a serial loop. KillDry does not fix these issues since the control of the wet/dry mix in a parallel FX loop is on the amp and not in the G-System. Get the point yet? To summarize:

- The G-System will sound best when used in a serial loop – period.
- If you are stuck with a parallel loop, then
    - be sure to use the KillDry on the G-System to avoid phasing artifacts
    - expect anemic modulation FX whether you use KillDry or not.

1.4.2.5 SOMETIMES "SERIAL" AIN'T SO SERIAL, AND 100% IS ONLY ABOUT 80%

The net is that the G-System really works better in serial loops. In some parallel loops, where the mix can truly be set to 100% wet (making the parallel loop "effectively serial"), things will work great. You can turn KillDry off and do all your wet/dry mixing inside the G-System and get great tone.

But on many amplifiers, there is substantial "leakage" of the dry signal to the power amp even when the mix is set to "100% Wet". If this is the case with your amp, then you may have to use the KillDry feature.

It may come as a surprise to you that even some "serial" loop designs have small levels of signal bleed that are high enough to cause audible sonic artifacts. Similar sonic artifacts can result from other issues as well. Here is a thought: If you hook up your G to your amp straight away and experience these sonic artifacts, how do you know what component is causing the problem? You don't – and please do not pretend that you do.

You may be tempted to say "well, the artifacts were not there before I hooked up the G-System and the artifacts are there now – so it must be the G-System." Not true. Was there anything digital in your loop prior to hooking up the G-System? If not, there is near-zero probability that signal leakage inside the amp across the loop would have caused any audible

artifacts. If you had nothing in the loop prior to that – then guess what: there is *zero* probability that signal leakage across the loop would have caused any sonic artifacts. If you had a digital device with a kill-dry feature you would not have heard any issue. You see the point: the fact that adding the G-System to your system exhibits a problem tells you very little about *where* the problem originates. How about this: We'll test just how "serial" your loop is without involving the G-System at all. If your amp fails this test – it is a problem with your amp – not with the unconnected-and-therefore-irrelevant G-System.

You should also note that a miniscule-but-audible amount of dry signal bleed across a serial loop is very common. In many cases, it will not be enough to damage the tone quality at normal playing volumes. The "wet" signal gets so loud relative to the dry signal that the wet signal effectively washes the leaked dry signal out, and you won't hear the artifacts. It is only when the leaked dry signal gets loud enough relative to the wet signal (or the wet signal gets quiet enough relative to the dry signal) that sonic artifacts become audible and therefore problematic. (If you can't hear it, it does not count.) So – don't panic if your amp "fails" the following test and you hear just a hint of signal leakage. (If you hear a lot of leakage then go ahead and panic ;-)

1.4.2.6 *HOW TO*: TEST YOUR AMP'S LOOP

Grab a muting guitar tuner pedal. Be sure that it really mutes. If you don't have one, borrow one from a friend. These things are far too common for you to need to purchase one special just for this test.

1) Set the amp up the way you like to use it with just the amp and your guitar. Get a nice, high-gain sound going.
2) Put the amp on standby
3) Use a short patch cable to connect the amp's FX loop send to the input on the tuner pedal
    a. Note: if your amp has two loops, serial and parallel, use the serial loop
4) Use another short patch cable to connect the output of the tuner pedal to the amp's FX loop return.
5) If you have a multi-mode loop on your amp, put it in "serial mode"
6) If you have a parallel loop on your amp, set it to 100% wet.
7) Take the amp off standby
8) Play with the tuner *unmuted* and adjust levels so they sound right.
9) Turn the amp main volume up fairly loud. (Normal playing level is fine. Don't kill your ears or infuriate your family/neighbors/etc.)
10) Now mute the tuner and play. Is anything coming from your speaker? Even faintly?

If so – think about this: How could there be? It is 100% wet or serial right? The tuner has already been shown to fully mute, right? So the signal can't be coming from the insert return, right? So….it HAS to be coming from inside the amp somewhere. Congratulations, your amp

has a faulty loop design or a manufacturing defect that permits some preamp signal to leak across to the power amp even when the loop is serial or 100% wet. You don't have a fully-serial loop – even if the amp manual says it is serial.

As noted earlier, a *small* amount of dry signal leakage across a serial loop is not necessarily a big issue. Due to signal cross-over in dual triode tubes and other amp circuitry, a small amount of leakage is extremely common. The sources of leakage are generally minimal, and generally result in no audible signal degradation.

Other loop designs, however, can have a significant amount of dry signal leakage. Parallel loops that have simple FX mix circuits often have large amounts of dry signal leakage even when the knob is set to "all wet". Some parallel/serial switchable designs also can exhibit substantial leakage. Finally, in rare cases, truly-serial designs have been shown to exhibit quite a bit of signal leakage.

In all cases where signal leakage is significant, the defining feature is a "metallic" or "phaser-like" tone even when all G-System FX are bypassed.

If you have *audible* tone issues due to dry signal leakage, you have few alternatives. You can work with the manufacturer to deal with it, or get a good amp tech to make the necessary repairs/mods, or you can live with the artifacts if they are not too bad for you, or you can replace the amp, or you can dump the G-System and avoid digital FX in your loop. But don't blame the G-System.

1.4.2.7 LOOP IMPEDANCE AND THE G-SYSTEM

Another aspect of FX loop design that can have a major impact on effects performance is impedance. We tend to think of the output of one device producing the same signal no matter what is plugged into it. We think of the signal cascading from the beginning of the signal chain to the end, with the downstream components having no impact on what the upstream components do. This model works most of the time – but strictly-speaking it is not true for electronics.

It is a little counter-intuitive, but the behavior of the input circuit at one end of an audio connection *actually alters* what comes out of the output circuit at the other end. This is the result of circuit loading imposed by the relationship between the output impedance of the "sending" circuit and the input impedance of the "receiving" circuit. This relationship is frequency-dependant, and the impedance tends to become a real issue at higher frequencies. This is why we hear a lot of high-frequency roll-off and signal "flattening" when there is a bad impedance match between output and input.

While this is a gross oversimplification, you can think of impedance for an amp's FX loop in simple terms. The output impedance of the FX loop send should be much lower than the input

impedance of the device receiving the signal. By "much lower" I mean 20-100 ***times*** lower. If the difference in the impedances is not this great (or larger), there can be significant sonic artifacts. Frequency response will disintegrate with high frequencies rolling off audibly and low frequencies will lose their "punch". These effects can be even more pronounced when a long cable is placed between the output and input. A typical guitar amp, for example, will have a 1000K-Ohm (1 MegaOhm) input impedance so it can handle the 10K-15K output impedance on a typical guitar pickup (coupled with a 15'=25' cable) without significantly attenuating any audible frequencies.

The problem is that with many guitar amp designs, loops were an after-thought by the designers. (In some cases, it would be a stretch to even give these designers credit for "thinking" at all, a situation that makes even the word "afterthought" absurdly comical.) To be fair, early designers did not know better, and had to learn that some common loop designs are just plain lousy. But we've had years for folks to learn these lessons now – and there are still amp designers out there putting the same old loops in their otherwise-thoroughly-modern amp designs. If you can put 3-4 channels of MIDI-switched preamp and maybe dual master volumes in your amp, you should be able to include a competent loop. Some amp designers and companies do exactly this. But some surprisingly-popular amp makers do not.

Early loops were simple. They were literally "mods" to existing amps that did not have loops. The signal wire leading from the preamp tone stack or coupling capacitor was cut. Each segment was routed to a 1/4" jack. The "send" jack was the other end of the segment coming from the preamp. The "return" jack was on the segment leading to the power amp. Easy, right?

The problem is that this kind of loop sounds awful with all but the most specialized FX pedals. The output impedance of the send is very high since it is tied to the output side of a tone stack or plate (anode) coupling capacitor, or "cap" (or worse, off a tone stack that itself comes off a plate coupling cap rather than a cathode-follower). This high output impedance means that the input impedance on a connected FX unit has to be extremely high. Most FX systems, including most vintage pedals, just don't have such high input impedances. Hence, when used, these loops result in substantial tone loss with all but a few pedals.

This is one of the main reasons that parallel loops were created. These guys never thought to bring the output impedance of the FX send down to remove the coloration from the serial loop that they had. Instead they "fixed" the problem by creating a parallel loop that would let some of the preamp signal bypass their otherwise-sorry loop design.

The pedal loop returns on the G-System are 91k-ohm - high, but not that high. The insert loop return on the G-System is 24k-ohms or 35k-ohms. This barely qualifies as high – and it means that if the output impedance of your send is not "low" (1.5k-ohm or less) you are probably not going to be happy. This also explains one of the reasons people hear tone loss with the G-system wired in 4-cable configuration, but not so much (or even at all) when the G-system is

completely contained within the amps FX loop. The 1 MegaOhm (1000k-Ohm) input impedance on the G-System instrument input allows for much higher output impedance on the amp FX send without degrading frequency response.

Fortunately, if your amp has a high-enough output impedance that you can hear it, there are off-the-shelf circuits called "buffers" and "direct injection" boxes that can mitigate this issue. (More one these later) They let you put into your amp's FX loop what should have been put there by the loop designer.

1.4.2.8 LOOP SIGNAL LEVELS AND THE G-SYSTEM

Another common issue with amp FX loops is the signal level. Guitar equipment typically operates at one of two different signal levels – "instrument" level and "line" level. Instrument level is about -10db, or about 320 millivolts, or 0.32 volts nominal voltage. Line level is about +4db or about 1.2 volts nominal voltage. The G-System works fine at instrument level and even in some cases at line-level. But it can have headroom problems with some hotter line-level voltages.

As it turns out, many amps have FX sends that are way hotter than nominal line-level. These sends can be anywhere from 1.5-3.0 volts – far in excess of what the G-System insert return can handle. Often, these sends have to be attenuated significantly in order to keep the G-System from clipping. But sometimes attenuation alone comes with its own set of problems – not the least of which is the lost signal going back into the return. Remember that the G has no way to re-amplify the signal it gets from the Insert Return. If we attenuate the signal coming into the G so that it is 1volt or less, it works great with the G, and then goes out of the G at 1volt or less.

But remember, in these cases the amp's FX send was hotter than this. This means that the amp's FX return is probably built assuming that the signal coming in is about the same level as the send. If we attenuate the signal coming from the amp's FX send, we need to restore the signal to about its original levels before it goes into the amp's FX return. Otherwise, we will hear a significant drop in over-all system volume and, in many cases, experience a significant loss of tone in the process.

We lose the tone because the components in the power amp stage are no longer being driven as hard, and so they behave differently. For example, phase-inverter (part of many power amp stages) distortion is a significant part of some people's sound. You need a strong signal to drive a phase inverter to distort. If you weaken the signal coming into the phase inverter, guess what happens to your phase inverter distortion: It is reduced or even nearly-eliminated, and you lose the tone you love.

1.4.2.9 SUMMARY ON AMP FX LOOPS AND THE G-SYSTEM

Well-designed modern loops have constructs to deal with all of the aforementioned issues. They have adjustable send levels, -10/+4db switches, and even a "gain makeup" stage right after the FX return to compensate for any attenuation at the sending end. With such loop, you can really tune the signal levels in the loop without damaging your sound. They also tend to be buffered (as described in the prior section), so impedance mismatches and the consequential signal degradations are not an issue. Many of these loops are serial, or can be switched between parallel and true serial operation. Such loops work extremely well with the G-System. Examples include the loops on the VHT series of amplifiers and the Switchblade series from Hughes and Kettner, and nearly any rack-based or pedal-based preamp.

If your amp's FX loop is not like this: If it has a very high, out-of-norm signal level or if it has a high-impedance send you are probably going to need additional hardware to make the G-System and your amp get along well.

1.4.3 KEY SIGNAL-LEVEL CONTROL POINTS IN YOUR AMP

Most of the gain-level and volume controls on your amp are about two things: controlling the gain-level in the preamp and controlling the overall volume of the power amp. The latter has little-to-no relation to configuring the amp and G-system – so we will ignore it. Further, the gain settings in the individual channels do have some impact on G-System configuration since they can impact the send level of the loop. The preamp gain controls, however, are mostly about tone production and not so much about overall volume – so we will mostly ignore those too.

Many amps have "channel master" volume controls that are used to help make the volume levels comparable between two or more preamp channels so you can voice the preamp the way you want and then control the overall preamp volume so one channel is not way louder than another. In an amp with a send-level control, the channel volume is not all that important and can be ignored. In an amp without a send-level control, the channel volume can be used, to some degree, to control the FX send level. For our purposes, we can "pretend" that a channel master control is an FX send level control in cases where an amp has no additional FX send control.

Finally, a +4/-10 switch is really just a fixed-level form of send and/or return level control – so we can safely ignore this too.

Given these simplifications, the over-all topology of the amp looks (approximately) like this:

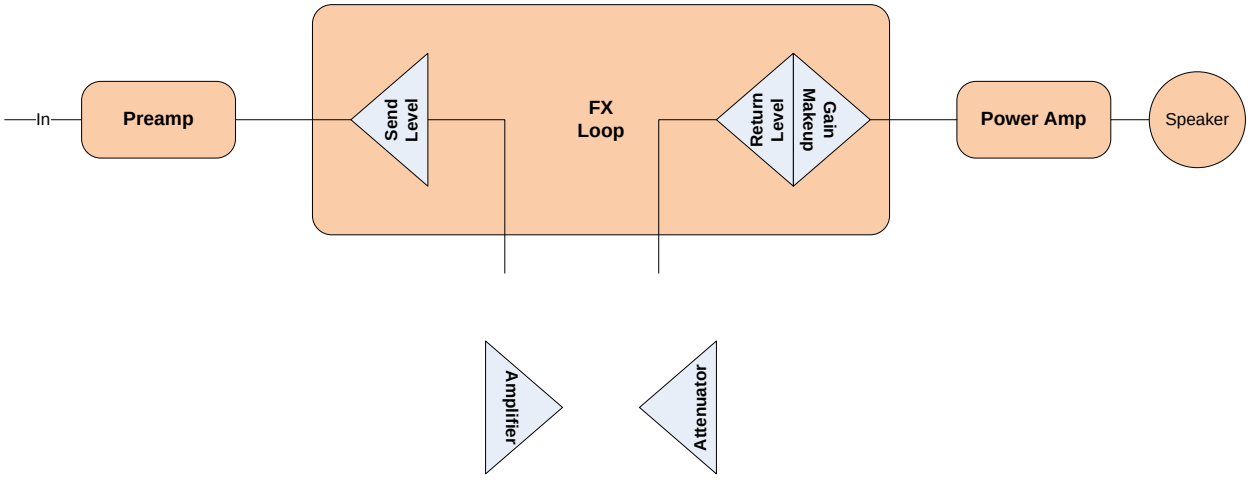

1.5 CONFIGURATION OPTIONS, OR "HOW MANY CABLES?"

You actually have several alternatives for how you connect the G-System and your amp. The method you choose will depend on several factors – probably the most important being whether the amp has a suitable FX loop. This section describes the most common configurations of the G-system with one amp.

1.5.1 PUTTING THE WHOLE G-SYSTEM BEFORE THE AMP: 2-CABLE CONFIGURATION

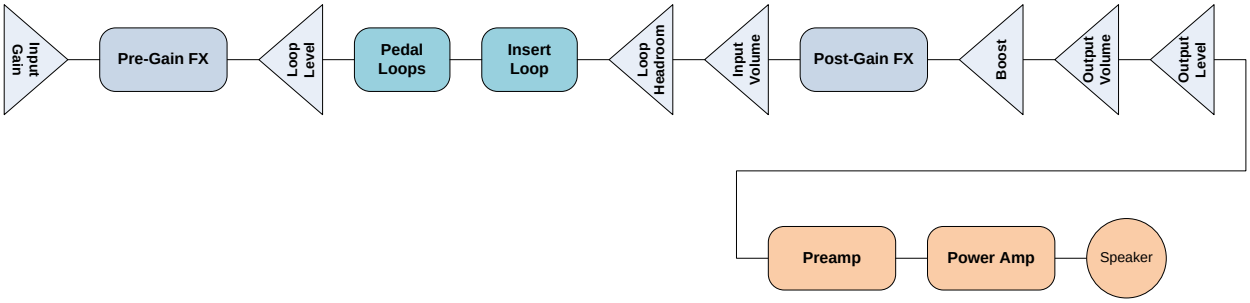

As you can see in the diagram above, the G-System can be placed between the guitar and amp such that all of the G-System features (loops, FX) are placed before the amp input. If you have an old combo amp or head that does not have a loop, this is your only option.

The key issue with this setup is that it puts FX that are designed to be post-gain before the preamp. This can result in some very odd time-based sonic artifacts, including unintended phase issues and unintended tremolo (pulsing).

1.5.2 PUTTING THE WHOLE G-SYSTEM IN THE AMP'S FX LOOP: 3-CABLE CONFIGURATION

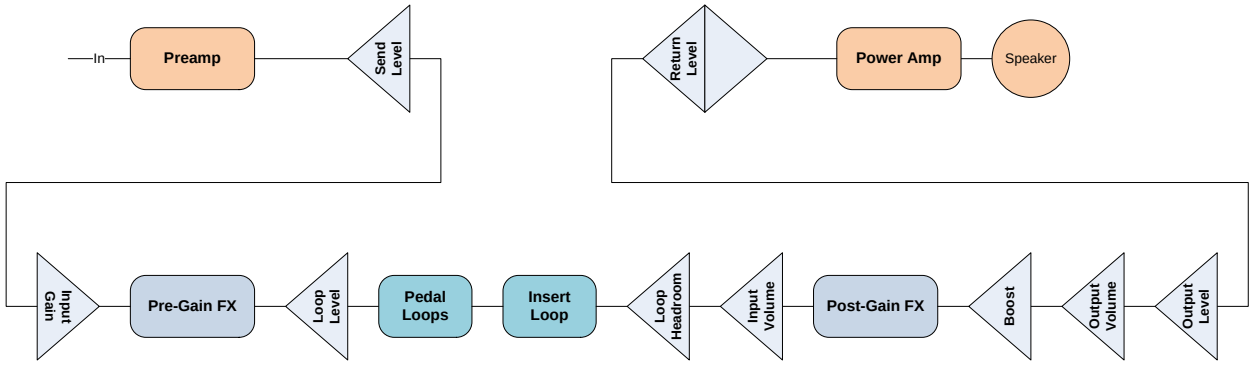

In this configuration, all of the G-System features are completely contained in the amp's FX loop. This configuration has the advantage of simplicity. In some cases, if your amp's loop is high output impedance or has signal-level issues, then using this configuration may help, since the G-System Input handles such oddities more gracefully than its insert return. While this setup may help with these particular loop-related issues, it will not help a parallel loop. In fact, it will make things much worse, since the delay introduced by the G-System front end digital section will be added to the delay introduced by the back end digital section in the loop – taking what might have been a subtle-but-acceptable set of artifacts and making them unbearable.

The other problem with this configuration is that FX which most people agree sound better pre-gain (filters, compressor) come after the preamp. It also puts the pedal loops inside the amp FX loop, so pedals (which are usually pre-gain optimized) become post-gain as well – with consequential impacts on sound quality.

That said – you may well prefer hooking up the G-System this way under the following circumstances:

1) As stated – if you have signal-level or impedance issues in your loop and you don't want to use supplementary hardware to mitigate the issue.
2) If you plan on running pedals that are optimized for post-gain usage anyway and would like the G-system to control those pedals.
3) If you don't plan on using the FX in the first DSP block much or at all.

1.5.3 SPLITTING THE G IN HALF: THE "FOUR-CABLE" METHOD

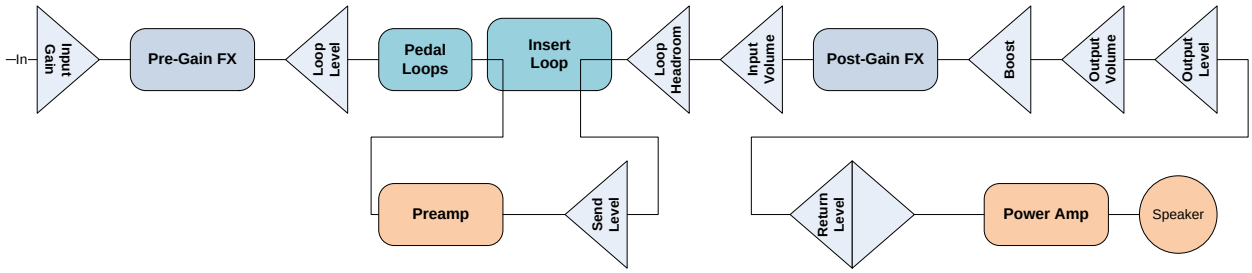

In most cases, this is the optimal way to hook up the G-System to your amp. This is what the G-System engineers really intended. This is a great configuration since most (not all) people agree that filters, compression, overdrive/fuzz/distortion boxes, and many vintage pedals sound best pre-gain (before the preamp). Delay and reverb generally sound better post-gain. (Pitch shifting and Modulation can sound good in either place, and will sound different depending on where they go.)

Having said this – this is not the "right" way (or the "wrong" way) to hook up. The "right" way is the way that results in sound and function that *you* and your listeners like.

SECTION 2: CONFIGURING THE G-SYSTEM SIGNAL PATH

Configuring the G-System that is either completely contained in an amp's FX loop, or entirely kept before the amplifier input is pretty trivial. You can simply adjust the input gain and output levels to taste and go with the factory defaults for almost everything else. But using these configurations can result in timbre ("tone") quality issues as described in the previous section. For optimal timbre from your system, you generally need to use the 4-cable hookup method, since this positions the G-System internal FX and pedals in their "optimal" locations before or after the amp's preamp.

Unfortunately, this configuration is non-trivial for several reasons:

1. The number of connections between the amp and the G-System increases. This proportionally increases the probability of RFI-induced (RFI = Radio Frequency Interference) sound-quality issues in your rig. Such issues may require hardware mitigation (use of balanced cables, incorporation of ground isolation devices, etc.)
2. The G-System becomes much more sensitive to properties of the amp's FX loop implementation (impedance and signal level specifically). These issues may also require mitigation, in the form of signal level shifters and buffers.
3. The G-System levels/signal path requires tuning to minimize noise and maximize signal levels.

The direct consequence of these complications is that setting up the G-System in 4-cable configuration can be terribly frustrating. Most users simply hook up the G-System as described in the manual and start using it. When they encounter problems, they generally get frustrated. The smart ones go on-line and get help. The rest either figure it out, or replace the unit with something else.

Fortunately, you only need to get through this process once or perhaps twice (for two amps). Once you have things working well, they stay working well and you can focus the fun part – programming FX and playing your instrument. The following process will help you to get through the configuration of the G-System in such a way that you can set configuration parameters intelligently and so that you can isolate and diagnose problems more easily.

2.1.1 THE FIRST DECISION – SHOULD I RACK MY BRAIN?

The G-System is actually two products, joined together with a four screws. The G-System Foot Controller is a pure foot controller. No audio signals pass through it. The foot controller has a 1U (1 Unit) rack space under it. The G-System Effects Module, called the GFX01 (and commonly called the "brain") is mounted in that space. The connection between the two is a simple Cat-5 cable (yes, the exact same cable as your wired computer network uses.) When you set things up, you have the option of un-mounting the brain from the foot controller and put the brain in a rack.

There are advantages and disadvantages to putting the GFX01 in a rack. Advantages include the following:

1. Your stage setup is very simple, since you have only the G-System Foot controller and (perhaps) volume and expression pedals on the stage with you and your guitar(s).
2. Cable lengths between the G-System and the amp can be shorter, especially if the amp is a rack-mounted head.
3. You only need 1-2 cables running to the stage from the back line – the Guitar cable (unless you use wireless) and the Foot Controller data cable. Note, however, that with the use of a nice TRS cable snake, the number of "cables" in the other configuration is only 2-3).

There are some disadvantages to this setup, and some misconceptions as well.

1. You will actually have to be *more* aggressive about preventing noise in a rack. Rack systems are notoriously noisy. You *still* should use balanced cables and transformer isolation for connecting the G-System and the amp. The shorter cable lengths in a rack do *nothing* to prevent ground loops. If you have metal rack rails, even those can create ground loops since the rack rails connect the metal cases of your rack gear. Further, while shorter cables are indeed less likely to pick up interference, you are putting them in a rack that is FILLED with interference, much more interference than is likely to be present even a few feet away from the rack.
2. Unless you are using a wireless system, you now have to have a guitar cable that runs all the way to the back line where the rack is situated. Long guitar cables are ***bad***, even when using really good guitar cables. You may well need a buffer to compensate for signal degradation due to cable length. Note that many wireless systems need buffers too. The signals coming out of the G-System brain are already buffered, so they can make this "trek" with fewer side-effects than the raw guitar signal.

You also need to be aware of a few things when you put the G-System brain in a rack.

- It is imperative that you mount a 1U rack faceplate in the G-System Foot Controller to replace the structural support that the brain *was* providing before you un-mounted it.
- Second, you will need to acquire a longer data cable to extend from the foot controller to the brain. If you want things to be extra reliable, a data cable with "Neutrik" housings is a good idea. As it turns out, the Line 6 Variax cables are exactly this, Cat-5 data cables with Neutrik housings. You can also purchase add-on Neutrik housings to "retrofit" many standard data cables.
- You may need to change the G-System to use the front input rather than the rear input, as configured at the factory. See the section titled "How To: Set the Input Source" (a little further on in the paper) for details on how to do this.

2.1.2 BEFORE YOU CONNECT THE G-SYSTEM TO YOUR AMP

There are some common critical success factors that have dominated discussion of configuring the G-System. You should start with these:

1) High quality, well shielded, low-capacitance cables for all connections between the G-System and the amp. Cable quality is very important, and the cheap bulk cables from your local music store will not cut it. That said – you don't necessarily need Mogami or George-L's either. There are good, less expensive solutions out there.
2) A *balanced* cable for use between the G-system insert send and the amp input, as well as one between the amp send and the insert return. Even though your amp input and send are not balanced (unless it is a very unusual amp), the G-System does some "fancy" things when you use balanced cables in these locations. It is not like other devices in this regard. Many G-System users have noticed a significant improvement in signal quality when they switched to balanced cables at these locations. The G-System manual is explicit about this. Here is a quote from page 20 of the release 2.04 manual:

   > ***Insert***
   >
   > *This loop is intended for a pre-amp. If cables longer than 3 feet are used, they should be balanced, even if the connectors on the pre-amp are unbalanced. When balanced cables are used, a special pseudo balanced circuit will reduce the noise which would occur when using unbalanced cables.*

   You will also note that many users have experienced significant signal improvements when the lead from the insert send to the amp input is balanced, even when the cable length is less than three feet. Further, the G-system outputs are also balanced – so if you use a balanced cable here then you are one small step from having a true balanced connection if you end up needing it. (More on how to determine this later)

I recommend that you do yourself a favor and grab a small TRS-TRS recording snake and use it for hooking the G-System to your amp. You won't regret it. All of your leads from the floor to

the back line will be bundled neatly, managed easily, and can be balanced if need be. As you will see in the section on switching – if you are using the G's relay switching capabilities to switch amp channels and features, then one or two of the snake's leads can be dedicated to those functions also. That has you using 5-6 leads on an 8-channel snake, with 2-3 left over for other gear or for spares if a lead gets cut or something happens to a plug. Such a snake will cost much less than the sum of the individual cables you would need otherwise.

2.1.3 PREPARING YOUR G-SYSTEM FOR CONFIGURATION

Before trying to configure any complex system, it is best to put it in a "known" state. The G-System comes from the factory configured for 2-cable (everything before-the-amp) or 3-cable (everything-in-the-loop) usage. If you have been trying to do things yourself, you may have things in a really odd state. This section will walk you through preparing your G-System for configuration in a 4-cable configuration.

Go ahead and plug the G-System into the wall – but do not make any connections between the amp and the G-System. In fact, don't connect the G-System to anything else.

- No Guitar
- No Pedals
- No Amp
- No Amp Switching
- No MIDI
- *Nothing but power*

2.1.3.1 *HOW TO*: SET THE INPUT SOURCE

The G-System can be kept in one piece, with the "brain" installed under the floorboard – or it can be divided so that the brain goes in a rack. Each of these configurations uses a different input jack, and you have to configure the G-System to select the input jack that you intend to use.

1) Navigate to the Global Levels Menu
    a. Press the Edit Button
    b. Press the Menu Button
    c. Rotate the Loop3/Parameter "A" button/knob until the display says "Global Levels"
    d. Press Enter|Return (from now on – just "Enter")
    e. Note: from here on out we will shorthand this type of sequence as "Edit>Menu>[Global Levels]>Enter"
2) If you have the GFX-01 mounted in a rack, set [Input Select] = ***Front***
3) If you have the GFX-01 mounted under the floorboard, set [Input Select] = ***Rear***
4) Press Edit

2.1.3.2 *HOW TO*: TURN OFF THE BOOST

The boost in the G-System is a little odd, as stated earlier. It can be useful – but it can actually confuse matters if it is enabled during configuration. It is best to "turn it off" while configuring. To do so, do the following:

1) Navigate to the Utility Menu (Edit>Menu>[Utility]>Enter)
2) [Boost Lock] = ***OFF***
3) Press Edit
4) Navigate to the Global Levels Menu (Edit>Menu>[Gbl Levels]>Enter)
5) [Boost Max] = ***0db***
6) Press Edit
7) Press the Boost button 2-3 times until the light around the button is off (Boost *OFF*).
8) Edit>Menu>[Utility]>Enter>[Boost Lock] = ***ON***
9) Press Edit

We set the boost lock above so the boost level for all patches will remain at 0db no matter what a patch we switch to says its boost level should be. There will be more on locks in the next section.

2.1.3.3 *HOW TO*: TURN ON THE INSERT LOOP

The insert loop is the 5th loop in the G-System loop section. It is not called loop 5 because it is intended for "inserting" your preamp into the signal chain. In other words, in 4-cable configuration, it is the G-System insert loop that transfers the signal between the G-System and the amplifier's preamp. By default, this loop is off, which causes a lot of confusion when people don't turn it on and then wonder why they get a weak, no-distortion signal from their high-gain amp. Well of course not. With the insert loop turned off, the gain on your high-gain amp is being bypassed.

Even more confusion is created since, by default, the insert loop is a patch parameter, so even if you turn it on, the next time you switch to a patch that has it off, it will turn off again. ALL of the factory patches have the insert loop off (they have to). So unless you do something about it, every time you switch to a factory patch you will bypass your preamp. Not good.

Fortunately, the G-System has several parameters with "locks". Locking a feature tells the G-System "hey dude, when I change patches I want you to leave this parameter where it is and ignore what the patch says about it." This is why we turned on the boost lock in the previous section. We want the G-System, while we are setting things up and testing, to ignore what any patch has to say about boost levels and status – so we lock the boost off. Similar reasoning applies to locking the insert on – which is arguably even more important. I can't tell you how many users I help out swear to me that their insert loop is on – only to find upon inspection that it is off because they had changed presets before locking the loop.

The Insert Lock is vital to your sanity. Unless you sometimes want to bypass your preamp, you should set this lock on and keep it there permanently. If you intend to do something fancy and switch between amps later, ok. But set this lock on while doing configuration anyway. You can always unlock it later.

Turn on the Insert loop and lock it as follows:

1) Navigate to the Utility Menu (Edit>Menu>[Utility]>Enter)
2) [Insert Lock] = ***OFF***
3) Press Edit to exit menu mode.
4) Press Edit again to enter patch edit mode.
5) [Loops]>Enter>[Insert] = ***ON***
6) Press Edit
7) Navigate to the Utility Menu again (Edit>Menu>[Utility]>Enter)
8) [Insert Lock] = ***ON***
9) Press Edit

2.1.3.4 *HOW TO*: BYPASS ALL OF THE G-SYSTEM FX

While you are configuring the G-System, having any digital effects or pedals in the signal path can confuse issues substantially. It is best to bypass everything (except the insert loop, which we locked above). The best way to do this is to select the "All Bypassed" patch on the G-System as follows:

1) Press the Bank UP button until the display reads "***B9***". (It will probably be flashing)
2) Press the Patch 5 button.
3) The display should read "B9-5 All-Bypassed" or something similar.

Just to repeat a point. Selecting the "All-Bypassed" patch does not bypass (turn off) the insert loop because earlier we locked the insert loop in the on state – and the lock says "ignore what the patch says." So the G-System will ignore the command from the All-Bypassed patch that tells the G to turn off the Insert loop. Do you see why understanding and using locks is so important?

2.1.3.5 *HOW TO*: SET INITIAL SIGNAL LEVELS

G-System level setting is extremely important. Improperly-set levels can result in bad clipping, lost gain and tone, and bad volume and/or noise levels. We will be progressively adjusting levels as we go through this process – but for the process to work, the G-System has to start in a known state. We want to configure the G-System so that it is "neutral" from front to back. We prepare to do this by setting levels initially as follows:

1) Edit>Menu>[Gbl Levels]>Enter
2) [Input Gain] = ***8db***
3) [Loop Level] = ***0db***
4) [Loop Headroom] = ***2db***
5) [Volume] = ***0db***
6) [Volume Position] = ***Output***
7) [Output Level] = ***0db***
8) Press Enter

2.1.3.6 *HOW TO*: PROPERLY CONFIGURE KILLDRY

If you use an amp with a parallel loop that can't be reliably set to 100% wet, then you need to turn on KillDry. If you have a serial loop (or a parallel loop that really does go to 100% wet), then you do not want KillDry. You configure KillDry as follows:

1) Navigate to the Utility Menu (Edit>Menu>[Utility]>Enter)
2) If you have a serial loop on your amp, then [KillDry] = ***OFF***
3) If you have a parallel FX loop on your amp, then [KillDry] = ***ON***
4) Press Edit to exit menu mode.
5) Press Edit again to enter patch edit mode.

2.1.4 CONFIGURING THE G-SYSTEM "BACK END"

Because most of the problems that arise in configuring the G-System involve its integration point with the amplifier's FX loop, it is best to start here for configuration. We will bypass the front end of the G-System (the input, the first DSP block, and the pedal loops) and jack the guitar directly into the amplifier (wait on this though…please).

The goals for this section of the configuration task are as follows:

1) Adjust the amp's FX loop for optimal usage with the G-System
2) Adjust the G-System Loop Headroom for optimal usage with the amp.
3) Detect and correct any RFI/noise issues that are introduced by the corresponding connections.
4) Detect/correct any impedance or loop level mismatch issues.

2.1.4.1 WIRING

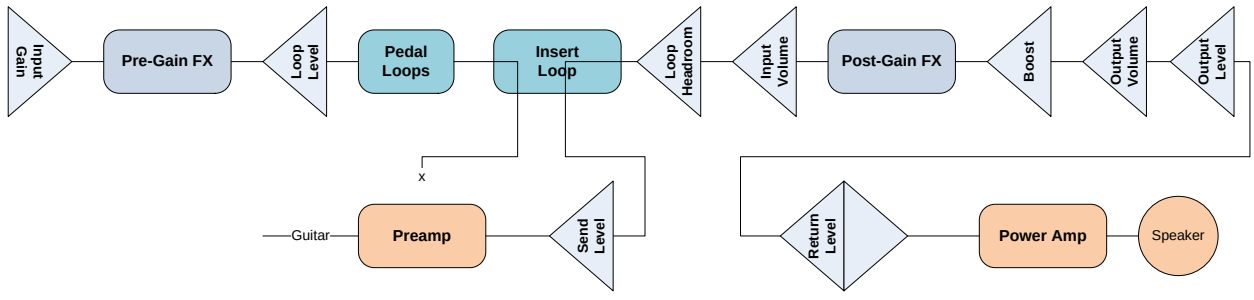

The diagram above shows the signal path of the G-System when we bypass the front end and put just the back end in the amp's FX loop. Notice that nothing from the G-System input to the insert send is in the signal path – so any issues we encounter in this configuration can't originate in these components. Also, if we are clever and patient about when we hook up the three

cables involved, we can quickly isolate and (often) solve problems introduced at each connection point.

One way we can do this is to actually connect things "backwards" in the signal chain. For example, we will start by connecting the output of the G-System to the FX return on the amp. We will not get any guitar signal this way – but if there is a ground loop or RF noise on that connection, we should hear it right away and we can probably fix it.

2.1.4.2 *HOW TO*: PREPARE YOUR SYSTEM FOR HOOKUP

We need to get things ready first.

1) If you have not already done so, then run through the section above titled "Preparing Your G-System for Configuration" and make sure you have the G-System in a good starting state.
2) Plug in a guitar, power up your amp and put it on settings that you like to use. Set the volume pretty loud, but not deafening.
3) Put the amp on standby.
4) If your amp has a ***loop on/off switch***, turn the loop ***on***.
5) If your amp has a switch to ***serial/parallel switch***, set it to ***serial***.
6) If your amp has a ***+4/-10db switch***, set it to ***-10db***.
7) If your amp has only a ***parallel loop***, set it to ***100% wet***.
8) If your amp has a ***send level*** control, set it about ***half-way*** for now.
9) Unplug the guitar cable from the amp input if it is plugged in.
10) Take the amp off standby and wait about 30 seconds.
11) Listen and make a mental note about the amount of sound coming out of your speaker now. Try to remember this noise level.
12) Put the amp back on standby.

2.1.4.3 *HOW TO*: CONNECT THE G-SYSTEM TO THE AMP'S FX LOOP

We're going to start by simply connecting the output of the G and see if there are any RF problems. You won't be getting any instrument signal, but if you hear a noticeable increase in hum or buzz, then there are RF issues that need to be mitigated before we continue.

Gather/Acquire the following materials:

- (3) TRS-TRS ("balanced" or "stereo") cables long enough to go from your G-System to your amp.
- (2) TS-TS ("mono" or "instrument") cables no longer than 18" (1/2 Meter) in length.
- (1) 2-channel ISO-Box that will prevent ground loops and convert balanced signals to unbalanced signals. EbTech makes an excellent unit for this (model HE-2). There are

others, but avoid the Behringer unit (which has not worked well for any G-system owner as far as I know) and the Rolls unit (which has been problematic for some people). Also – do NOT confuse this with the EbTech Hum-X, which is not the right tool in this case.

Do the following:

1) Connect a TRS-TRS cable from the G-System *Left/Mono output to the Channel 1 Input* on your ISO-Box.
2) Connect a TS-TS cable from the ISO-Box *Channel 1 output to the FX Return* on your amp.
    - Note: if you have both a serial and a parallel loop on the amp (some amps have two loops) then plug into the return for the serial loop.
3) Take the amp off standby and wait about 30 seconds.
4) Listen again. The amp should be at about the same noise level as it was before plugging things in.
5) Put the amp back on standby.
6) Connect a TRS-TRS cable from the Amp *FX loop send to the Insert Return* on the G-System.
    - Note: if you have both a serial and a parallel loop on the amp (some amps have two loops) then plug into the send for the serial loop.
7) Take the amp off standby and wait about 30 seconds.
8) Listen again.
    - Does it sound about the same noise-wise as it did when you had just the output connected to the amp? Or do you hear additional hum and buzz? If not, great – we can continue to the next connection.
    - If you do hear more hum and buzz than before, you may or may not have a problem. Remember – you now have the preamp back in the signal chain. If it generates any noise, you will hear it now where you would not have heard it before. How does the noise level compare to when you listened during "Prepare Your System for Hookup?" If that is about the same, then you can continue on, as the new connection did not introduce any new noise – it only restored noise that was already present in the preamp.
    - Otherwise, for now – remember that the "Insert Return connection" is noisy and continue onward.
9) Put the amp on standby.
10) Plug the guitar into the amp.
11) Take the amp off standby and wait about 30 seconds.
12) Don't play the guitar yet – just listen – with the volume all the way up on the guitar.
    - If you get additional hum or buzz at this point – it is your guitar or its cable. If the noise level is acceptable, then fine. If not, you can:

i. Try another cable.
ii. Move the guitar away from any florescent lights, or electronics – including the amp and especially computers of any kind.
iii. Install a string ground.
iv. Shield the pickup cavity of the guitar.
v. Have the electronics in the guitar checked for faults – especially ground faults.
vi. Get a guitar with humbucking pickups if you currently use single-coils.
vii. Get a hum filter pedal for the guitar like the Morley HumDebugger.
viii. Live with it and later use the noise gate on the G-System to take care of it.

2.1.4.4 *HOW TO*: SET AND DIAGNOSE THE LOOP LEVELS

We are now ready to check the loop level and attempt to adjust the levels to maximize signal-to-noise ratio (s/n ratio) and minimize clipping. We may discover while doing this that the loop on your amp is too "hot". If this turns out to be the case, we can deal with it.

Do the following:

1) Switch the amp to a clean channel.
2) Play your guitar and listen.
3) Is there any clipping – unwanted distortion that you can hear in the signal?
    a. If not, then you probably do not have any signal-level issues with your amp loop. Take note of this.
        i. If you have an amp send control – then try turning the amp send up until you do get unwanted clipping.
            1. If you turn the amp send all the way up and you still don't clip – great!
            2. If you reach a point where you can hear the clipping, back off about "2 hours" on the knob. (So if the knob is at 4:00 when the clipping starts, dial it back to about 2:00.)
            3. As you adjust the loop send level, you may need to adjust the amp master volume to compensate.
        ii. If you don't have an amp send control and if you think the signal is a little weak, try turning the channel volume on your clean channel up if you have one. Follow the same approximate procedure for this as you would for adjusting the send level.
    b. If you do have clipping right off the bat, it is a little more complicated.
        i. Try increasing the value of the G-System Loop Headroom
            1. Edit>Menu>[Levels]>Enter>[Loop Headroom]

2. Adjust this until things sound ok – but don't go past about 6db.
    a. If you get to 6db and you can't get rid of the clipping, then you have a signal-level problem on your loop. Put the loop headroom value back at 2db and move on.
    b. If you manage to get rid of the clipping before you reach 6db, then keep that setting.
3. You may need to turn the return level or master volume on your amp up as you increase the loop headroom.
4. Press Enter

ii. Try turning down the send level or channel master. Again, compensate for lost volume using the amp's volume control if you can. Don't go too far with this. You'll hear when the tone quality suffers. Don't get that far. If you can't turn things down without ruining the quality of the sound, you have a signal-level issue with your loop and there are better ways to deal with it.

4) If you don't have signal-level issues so far, then continue here.
5) Change to your loudest amp channel.
6) Play loudly…do you hear any clipping?
    a. If so – adjust your loop headroom or the amp's send level as described above in step 3b. If you can't dial out the clipping without a loss of tone, then you have a signal-level issue in your amp.

2.1.4.5 *HOW TO*: SOLVE SIGNAL-LEVEL PROBLEMS IN YOUR LOOP

If you have signal-level issues with your loop, you will need to get some kind of attenuator. You will also need another (short) TS-TS cable.

Here are two suggestions for an attenuator:

- EbTech makes a good 2-channel unit called the "line-level shifter" (model LLS-2).
- A DI box also works well, and has the benefit of buffering the amp send in those cases where impedance mismatches occur. High-quality, transformer-based, passive DIs are superior solutions in this case. If you go this route, you will want to get a converter jack to go from the balanced XLR output to a female ¼" TRS jack so you can connect your TRS-TRS cable to the DI box output.

Anyway – acquire one of these items and then do the following:

1) Put your amp on standby.
2) If you got the EbTech unit:
    a. Connect a TS-TS cable from the amp's *FX send to the channel 1 +4db jack* on the line-level shifter.

b. Connect a TRS-TRS cable from the line-level shifter's *channel 1 -10db jack to the insert return* on the G-System.

3) If you are using a DI box
   a. Connect a TS-TS cable from the amp's *FX send to the input* on the DI box.
   b. Connect the *XLR-TRS converter jack to the XLR output* on the DI box.
   c. Connect a TRS-TRS cable fom the *converter jack to the Insert Return* on the G-System.
4) Take the amp off standby and **repeat** the level-setting procedure describe above.

2.1.4.6 *HOW TO*: ADDRESS A SIGNIFICANT LOSS OF TIMBRE IN THE BACK END

In some cases, especially on hand-modified amps where loops were added outside of the factory, there may be impedance issues at the amp FX loop send. This will manifest itself as a noticeable loss in brightness or sparkle in the tone – even with the levels set fairly high.

If this is happening to you, you probably have an impedance issue between the amp send and the G-System insert return. A good buffer or impedance-matching device will often solve this problem. The VHT Valvulator I, the Radial Dragster, the BoostNBuff are examples of devices that may help resolve this issue. A DI box, wired as describe above, may also improve things – although you need a DI that does not attenuate if you can get one. Try inserting one between the FX loop send of the amp and the insert return on the G-System.

2.1.5 CONFIGURING THE G-SYSTEM "FRONT END"

The front end of the G-System contains all of the pre-gain components, including the input, the first DSP block, and the pedal loops. Generally, the goal of configuring this section is to set things up so that the signal sent to the amp from the G-System is as similar as possible to the signal that would be sent to the amp directly from the guitar. Achieving an exact copy of the guitar's signal is a theoretical ideal that is not attainable with any piece of equipment except perhaps a bare cable or a true bypass pedal *when* it is bypassed. (When it is not bypassed, the pedal will be incapable of producing a perfect copy of the guitar signal too.) So we try to come as close as we can.

2.1.5.1 WIRING

The diagram below shows the signal flow of the G-System that we will use to set up the front end. This is actually the final wiring configuration for a four-cable hookup. The neat thing is that we "know" the amp's loop and G-System back end are working well together since we just get them working in the last section, so we can (should) leave those parts alone. Do not change the loop headroom, volume, volume position, output level, boost max, boost lock, or insert lock at

any time during the remainder of the process. These will not help you – and changing them will only confuse things when you finally put everything together.

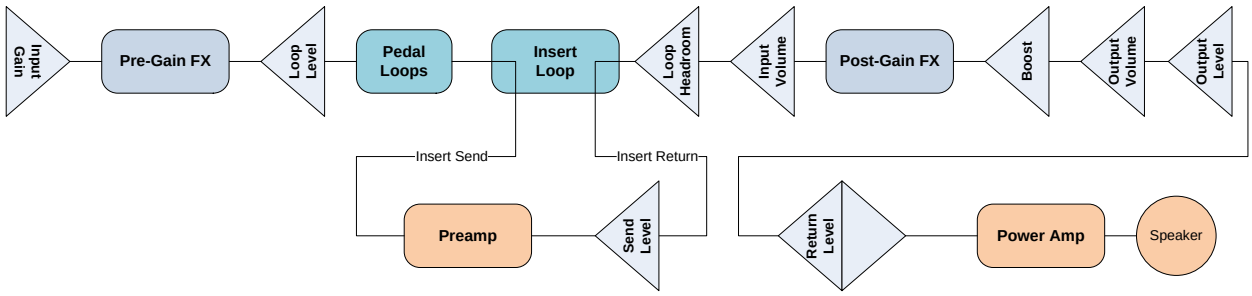

2.1.5.2 *HOW TO*: CONNECT THE G-SYSTEM FRONT END

This section describes a detailed process that can be used to connect and configure the front end of the G-System.

Connect the G-System and guitar and make sure you hear something.

1) Put the amp on standby.
2) Select the "All-Bypassed" patch on your G-System
3) Bypass the FX loop of your amp.
    a. If you have a loop enable/bypass switch on your amp, you can put this switch in the bypass position.
    b. If you do not have a loop bypass switch, then remove the plugs from BOTH the FX loop send jack and the FX loop return jack on the amp. You can safely leave everything else plugged in as it was.
4) Unplug the guitar cable from the amp input jack.
5) Connect a TRS-TRS cable from the G-System *Insert Send to the channel 2 input* on the ISO Box.
6) Connect a TS-TS cable from the ISO-Box *channel 2 output to the Input* on the amp.
7) Connect the Guitar *output to the G-System input* with a high-quality instrument cable.
8) Take the amp off standby and wait about 30 seconds.
9) Listen to the amp and make sure things are ok. If you can't hear anything, double-check your connections.

Find the volume of your rig without the G-System front end in the signal path

10) Put the amp on standby.
11) If you unplugged the cables in the loop in step 3, plug them back in.

12) If you bypassed your FX loop in step 3, re-enable it.
13) Remove the plug from the amp input and put it aside.
14) Plug the guitar directly into the amp input.
15) Take the amp off standby and wait about 30 seconds.
16) Switch the amp to a high-gain (distorted) channel.
17) Play the guitar and take note of the volume level (remember).

Put the G-System front end back into the signal path and match the volumes you heard previously

18) Put the amp on standby.
19) Plug the guitar into the G-System input.
20) Restore the plug you removed from the amp input in step 13.
21) Take the amp off standby and wait about 30 seconds.
22) Navigate to the input gain on the menu:
    a. Press Edit
    b. Turn the "Filter" knob, this will take you to the [Input Gain] Setting
23) Turn the [Input Gain] up and play until the volume and gain levels match what you heard in step 17. This will probably put you somewhere near 6db – 10db.

2.1.5.3 *HOW TO*: ADDRESS A SIGNIFICANT LOSS OF TIMBRE IN THE FRONT END

Amp input circuits, especially tube input circuits, interact with a guitar in a complex way. When you plug your guitar directly into your amp, this results in a specific interaction that results in a specific tone. It is the guitar that is most impacted, actually, and not the amp input circuit.

Input circuit specs for guitar inputs on amps and FX usually only specify input impedance. This tends to be quite high on an amp, ranging from 500k-ohms to over 1M-ohm. Most production guitar amplifiers today have an input impedance of 1M-ohm or so. The G-System input also has an input impedance of 1M-ohm. In many cases, plugging the guitar into the G-System input sounds a LOT like plugging it into the amp input and everything is great. But sometimes, despite the apparent similarity in specs, you run into issues. This is not abnormal.

The problem is that input impedance is a decent initial indicator of input circuit behavior, but it is not a complete description of the input circuit's behavior. It is a "heuristic". It is entirely possible for two input circuits with identical nominal input impedances to behave differently and sound very different from each other. The G-System can't emulate or behave like every input circuit out there – so how do you cope in those cases where the G-System input does not give you a sound at all like your amp input?

Most people who have had this problem have solved it with the addition of a good buffer. A high quality tube buffer like the VHT/Freyette Valvulator I works well for some people. There

are also some excellent solid-state buffers out there that work for other people. The point is that, if you find that you just can't dial in the G-System front end, then try a buffer between the guitar and the G-System input.

Note that you may *need* a buffer if your G-System brain is in a rack. If you are not using a wireless system, the cable lengths involved can be extremely harmful to your tone, and a buffer will fix this problem. Further, with some notable exceptions, wireless guitar systems are notorious for tone-suck because their input circuits can be pretty poorly designed. Beware of wireless systems that started as microphone wireless systems and then were "adapted" for guitar. Wireless systems designed for guitar from the ground-up do not exhibit nearly as many tone issues.

Notes on wireless systems and buffers

1) Wireless systems act like buffers to the devices that feed their outputs. If you have a wireless system, you have no need to put a buffer between the wireless receiver output and the G-System input. It is redundant, and will almost-certainly result in no tone change at all.
2) If you have a wireless system and your tone seems lifeless – and you don't want to change wireless systems, you can get small, belt-clip buffers to put between the guitar and the wireless transmitter (which is where tone problems with wireless systems usually arise).

SECTION 3: CONTROLLING YOUR AMP AND NOVA DRIVE FROM THE G-SYSTEM

The G-System gives you two options for changing channels and, sometimes, turning features of your amp on and off. One option has the G-System emulating a traditional amp footswitch by using internal relays to act like the buttons/switches on a footswitch. You plug the G-System into the amp instead of the amp footswitch, and then program the G-System to "push the buttons" (virtually, not literally) by opening and closing its internal relays.

The other option for controlling an amp is via the Musical Instrument Device Interface (MIDI) specification. Many modern amps have MIDI support built right in. Some of the most modern amps use ***only*** MIDI for control, and the foot controllers you get with them are actually just simple MIDI foot controllers. You can also purchase 3rd-party devices that will translate MIDI messages into footswitch signals so you can MIDI-enable an amp that does not have MIDI built in.

In both of these cases, the point is to eliminate the need to use a foot controller other than the G-System's. This makes your rig smaller and easier to set up at gigs. It also helps reduce "tap dancing" during performances.

3.1 RELAY SWITCHING WITH THE G-SYSTEM

3.1.1 ABOUT RELAY SWITCHES

Relay switches are mechanical devices that can re-route signals of any kind. One of the neat things about relay switches is that you can use relay switches to control other relay switches. This is, effectively, how the G-System relay switching facility works. You configure the G-System relay switches to "act" like your amp's footswitch. The amp also has internal switches (for changing channels, bypassing features, etc.). The G-System's relay switches effectively tell the amp switches when to switch.

The G-System switches can be "Open" (not passing a switching signal from one side of the switch to the other), or "Closed" (passing the switching signal from one side to the other). The amp actually generates the signal (we are using the word "signal" VERY loosely here) and then effectively senses if the signal comes back. Then the corresponding switch on the G-System is Closed, the signal returns to the amp. When the G-System switch is Open, the signal does not return to the amp. The amp's switching mechanism uses internal logic to decide, based on what signals it gets back and what it does not get back, into what position to put its internal switches.

3.1.1.1 RELAY SWITCH DELAY

All of this switching is, by and large, mechanical. This means that it takes time (called the "switching delay") for a switch to move from one position to another. Having one set of switches controlling another effectively (about) doubles the delay. The first set of switches (in the G-System) has to move, which takes time. Once those move the second set of switches (in the amp) has to move in response, which takes more time. So don't expect switching with the G-System to be as fast as when you just use the amp's footswitch. That said – for most applications, the combined switching delay of the G-System and the amp is low enough for most users. Others can go to some faster, MIDI-based solutions.

3.1.1.2 G-SYSTEM RELAY SWITCHING MODEL

The G-System has 4 relay switches, exposed via (2) TRS jacks on the back of the unit. In most cases, this is enough switching to select between 4 channels and also control two additional features (amp boost, FX loop bypass, bright/deep tone features, etc.).

In the user interface, the G-System represents the switch positions of the four internal relays as a string of the letters "O" (for Open) and "C" (for closed). For example:

- "OOOO" means that all four relays are open.
- "OCOC" means that two relays are open and two are closed.

A G-System patch holds two of these configurations, called "A" and "B". A patch also holds an indicator as to the default configuration (A or B) to use when the patch is selected. Finally, you can reprogram a button on the G-System's foot controller to toggle between the "A" and "B" configurations within the current patch. (More on programming relays in a patch later.)

The following diagram depicts an abstract model of the G-System relay switching parameters, and how they relate to the relays and SW OUT jacks.

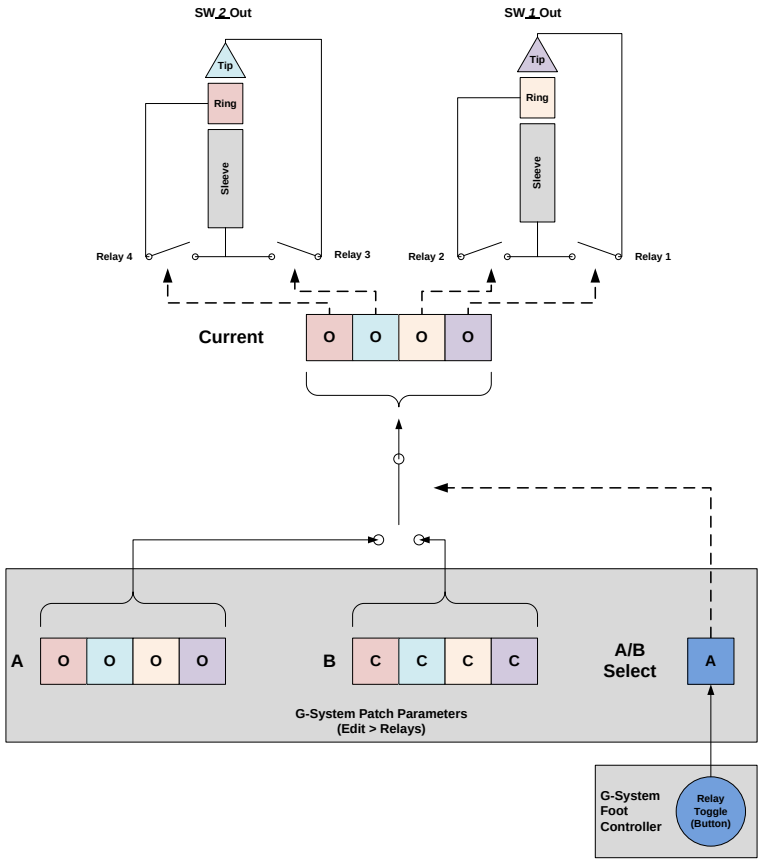

Figure 1 - G-System Relay Model

You can see a representation of the patch-specific relay parameters at the bottom of the diagram. In this case, the display would read "OOOO CCCC A". You can think of the A/B select as a switch that determines WHICH configuration parameter (A or B) controls the relays. When "A" is selected, the configuration named "A" is made the current configuration. (A/B select's "control" of this "switch" is represented with the dashed line between the two components). If A/B select were to become "B", then the "switch" would be configured so that configuration B becomes the current configuration. In this diagram, all the relays would close.

Since each SW OUT jack carries the relay state for two relays. They use a TRS cable, where the tip connects to one relay and the ring to another. Both relays share a common ground. When a relay is open, the signal wire connected to that jack component (tip or ring) has no signal on it. When this relay is closed, the corresponding wire gets a signal. At the other end of the connection, the amp senses if there is a signal or not, and responds accordingly by altering its configuration to match what the signals tell it.

If you want to avoid a lot of guess-work, you need to know what parameters correspond with which relays. Which relays does "COCO" turn on, exactly? Think of the relays this way:

- Relay 1 goes to the tip of SW OUT 1
- Relay 2 goes to the ring of SW OUT 1
- Relay 3 goes to the tip of SW OUT 2
- Relay 4 goes to the ring of SW OUT 2

All of this makes sense – until you realize that the people who did the relay configuration code on the G-System are bit-heads (programmers). So they think of the relay configuration as a bitmap, and you read bitmaps from right to left. So rather than thinking like the rest of us, and setting up the parameters as we would expect…

- The relay numbers correspond to the following positions in the configuration: "4321"

To make things clear, this means that a configuration of COOO will send a signal down the RING of SW OUT 2, and ***not*** the TIP of SW OUT 1. Use a finger to trace it through the diagram and you will see what I mean.

3.1.1.3 A CONCRETE EXAMPLE

Let's suppose that there is a relay switch on your amp that engages an on-board boost. Two other relays control selecting between 3 channels. Assume the following (this will differ from amp to amp)

OOOO = Mute, No Boost
OCOO = Clean, No Boost
COOO = Crunch, No Boost
CCOO = Lead, No Boost
OCOC = Clean + Boost
COOC = Crunch + Boost
CCOC = Lead + Boost

We could set the Relays for a patch to: COOO CCOC A

Whenever we switch to that patch, it will set the amp to "Crunch, No Boost", since the patch is programmed to use configuration "A", relay configuration A = "COOO", and "COOO"="Crunch, No Boost".

Now comes the cool part. You can reprogram one of the G-System buttons to toggle between relay configurations A and B by setting the button to the "Relay A/B" mode. Now, when you have that patch selected, you can hit the button to toggle between "Crunch, No Boost" and

"Lead + Boost" without changing patches on the G-System. You could then configure other patches to use other combinations of relays and use the same button to toggle those as well.

3.1.1.4 CONTROLLING A SINGLE RELAY

You'll notice that there is not a direct way to program a G-System button to toggle just one relay. You can simulate this behavior using the A/B toggle however, as long as you only want to reprogram one button for one relay. How?

Let's use the example from above. Suppose we have a lead patch, and we just want to turn the boost on and off, effectively using a button to toggle relay 1. We could set the relay configuration for that patch to the following:

CCOO CCOC A

What this means is that the lead channel will be selected when the patch is selected. When the A/B toggle is hit, the amp boost will turn on. When the A/B toggle is hit again, the amp boost will turn off.

As of this writing (G-System firmware release 4.02), there is no way to program one button to just toggle relay 1, and another button to toggle relay 2, and so forth. You need to use your amp's foot controller if this is what you want to do.

3.1.2 AMP-SPECIFIC NOTES ON RELAY SWITCHING

3.1.2.1 MESA BOOGIE AMPS

It is important to note that some Mesa amp models do not like the TRS switching setup in the G-System, which makes the tip and ring share a common ground. On these amp models, you should only use TS-TS cables to connect to the amp switch jacks. As such, you can only use two G-System relays (Relays 1 and 3) on these amps. Note that this only applies to certain very-specific Mesa amps – so check the TC Electronic support knowledge-base (***not*** the TC user forum) for a definitive list.

3.1.2.2 SPECIAL CONNECTORS

The G-System connectors are TRS. Common, off-the-shelf converters called "Y-cables" are available to change either or both of the TRS jacks to a corresponding set of TS jacks for amps with ¼" TS switching plugs. Many amps, however, do not use ¼" connectors for switching. In such cases either you or a tech must make a custom cable. The TC Electronic support knowledgebase contains information and schematics for switching cables for several amp models.

3.1.3 CONFIGURING SWITCHING

3.1.3.1 *HOW TO*: SELECT RELAY CONFIGURATIONS FOR A GIVEN PATCH

Here is a relatively-easy way to configure the relays for a given patch.

1) Hook up your relay wiring between the G-system and the amp
2) Select a patch that you want to program relays for
3) Edit>[Relays]>Enter
4) Rotate Encoder C until parameter C says "A"
5) Rotate Encoder A until the amp selects the channels/features you want to have in place when the patch is first selected
6) Rotate Encoder C until parameter C says "B"
7) Rotate Encoder B until the amp selects the channels/features you want as an alternative relay configuration for that patch
8) Rotate Encoder C until parameter C says "A"
9) Menu>[Preset]>Enter>[Save Preset]>Enter>Enter>Edit

3.1.3.2 *HOW TO*: REPROGRAM A BUTTON TO SWITCH BETWEEN RELAY CONFIGURATIONS

1) Edit>Menu>[Switches]>Enter
2) Turn the page encoder to select the switch you want to use for relay toggle
    a. Note that a diagram of the G-system labeled with the appropriate switch numbers is on page 44 of the current TC Electronic G-System manual
3) Turn encoder A until the left half of the display reads "relay"
4) Turn encoder B until the right half of the display reads "toggle"
5) Press Edit to exit edit mode

3.2 MIDI AND THE G-SYSTEM

3.2.1 MIDI BASICS

MIDI stands for "Musical Instrument Device Interface". It was developed in the 1970s and 1980s to enable computer control of electronic instruments – especially synthesizers. Over time, it has been adapted to other purposes, and many modern guitar amplifiers and amp switching systems respond to selected MIDI messages by switching channels or amp features (reverb, boost, etc.) The G-System MIDI implementation is intended primarily for amplifier control. This section of the paper describes how to use the MIDI features of the G-System for controlling amplifiers and, to some degree, amplifier-like devices that have MIDI support.

3.2.1.1 MIDI CHANNELS

One of the central concepts of MIDI is the channel. A single MIDI connection can carry signals for multiple devices. To differentiate between signals, each device can talk or listen on a different "channel". Hence, the device sending a message to another device has to send the message on a channel that the receiving device is listening on, or the message will be ignored. Similarly, if two devices are listening on the same channel, then they will both respond to the same set of messages. (This can be good or bad, depending on your intentions.)

Sometimes it is useful for a device to listen on all MIDI channels. For example, a computer might listen on all MIDI channels so it can record all of the MIDI traffic for an entire recording session. Then it would be able to play the traffic back and re-create the performance. The mode in which a device listens on all MIDI channels is called "OMNI" mode.

In order to make things easier to configure, amp manufacturers often put their units in OMNI mode. They assume that their amp will be the only listening device in the MIDI signal path, and so there is no harm in listening for everything. In general, however, it is best to set up your configuration to be as specific as possible so that when new devices are added, there is no confusion. Your amp should not be on OMNI – and your G-System should be set to transmit on the same channel that your amp is set to listen on. (Some Marshall amps are hard-wired to listen only on MIDI Channel 1. That is fine, just set the G-System MIDI channel to 1 and the G-System will be able to send messages to the amp without problems.)

3.2.1.2 PROGRAM CHANGE MESSAGES

In MIDI parlance, a "program" represents the idea of a meaningful combination of different configuration parameters. A sampler, for example, might have a program for each instrument it emulates.

In the guitar universe of discourse, the MIDI "Program" is most similar to a "patch" or a "preset". Often, you will have a preset for each song you play (or a bank of presets, if you get really crazy with some songs). If you are like me, I use about a dozen presets for the basic sounds I use and then just turn FX on and off within them as-needed.

A MIDI Program Change (PC) message is a request to change from the current preset to another preset. So, for example, the G-System foot controller can send MIDI PC:35 to the amp, and the amp should respond by loading ***its*** preset #35 and configuring itself accordingly.

3.2.1.3 BANK SELECT MESSAGES

Early MIDI devices were very simple, and could only store a limited number of programs. Hence, the MIDI spec only allowed for 7-bits of information in a program-change message, meaning that the program change message can only distinguish between 128 different programs. This was fine for a long time – but eventually the limit became unbearable. The G-System supports way more presets than that. Even the current General Midi instrument spec supports many more programs than that. You can't add bits, or you'll mess up all the old (sorry, "vintage") gear that expects only 7 bits – so what do you do?

Simple – you add another message that lets you select "banks" of presets. This is what the MIDI Bank Select message, called "Bank Select Most Significant Bit" (or "MSB" for short), is for. Old equipment will see a message type it does not recognize and ignore it. More modern equipment can use the message as-needed. If you have 7 bits of banks and 7 bits of presets for each bank, you can send two messages (a bank select immediately followed by a program change) and support 128x128=16384 different programs.

Actually, MIDI has two bank select messages. The second is called "Bank Select Least Significant Bit" (or "LSB" for short) – which essentially lets you create a bank of banks, for a total of 128x128x128=just a silly number of possible programs. We can safely ignore this for the purposes of this discussion, except to note that, by convention, when a device uses only one layer of banks (and not "banks of banks"), it uses the Bank Select MSB message and not the Bank Select LSB message to switch banks.

The problem with MIDI banks is that different devices organize MIDI banks differently. The MIDI spec does not say that you have to use all the program numbers in bank 0 before starting to use program numbers in bank 1. This can cause issues when two devices that want to talk via MIDI have different bank structures or worse, when one uses banks (like the G-System) and one does not. (More on this later.)

3.2.1.4 CONTINUOUS CONTROLLER MESSAGES

MIDI also defines a mechanism for varying individual parameters once a program is selected. This can include both continuous parameters, like pitch bend and volume levels, and discrete parameters, like turning an effect on or off (or toggling a loop, or selecting an amp channel).

Some better Amp MIDI implementations, and also better MIDI switchers, support MIDI Control Change (CC) messages to control individual specific parameters in the amp. For example, you might be able to use a CC message to toggle the built-in boost of your amp, or turn the FX loop on. Only a few amps support MIDI CC messages for real-time control, so you'll have to consult your amp manual to determine whether your amp supports this.

> *Ed: If you plan on using a 3rd-party MIDI-controlled amp/relay switching device, I recommend the Amp Gizmo specifically because it supports both MIDI PC and MIDI CC messages. Most products do not, and at least one MIDI amp switcher out there has the ridiculous behavior that it can support MIDI PC and MIDI CC, but not at the same time. You have to put the device in MIDI PC mode to make it respond to PC messages, and in MIDI CC mode to make it respond to MIDI CC messages. It can be in one mode or the other, so it can never be in a state where it can respond to both types of messages. I would avoid all MIDI products from any company that does this, since they have overtly demonstrated their complete lack of understanding of the semantics of MIDI messages. (The Amp Gizmo can respond to both types of messages without having to change "modes".)*

3.2.1.5 MIDI CABLES AND CONNECTORS

The original MIDI interface specification describes a 5-pin connector for all MIDI connections. Each of these five pins has a specific function. None of these pins provides power. When the 5-pin connector was designed, it was assumed that a MIDI device would have its own power, and hence would not need power delivered by the MIDI cable.

Many amplifiers that use MIDI footswitches have a 7-pin MIDI connector. Why the two extra pins? Power! This way, the amp can use the MIDI cable to provide power to the MIDI-footswitch that comes with the amp, and you don't end up having to plug the footswitch in separately. There is no standard for what type or level of power passes through these extra pins, so to take advantage of the power supplied by the amp, you have to use a MIDI footswitch designed specifically for that amp.

But you can still plug in any MIDI controller that has its own power. The G-System already has its own power supply, for example, and does not need the power supplied by the amp. In fact, if the amp's power were to get to the G-System, it might cause damage. Fortunately, this is physically impossible. The G-System connector is 5-pin. The extra two pins on a 7-pin

connector will physically prevent the cable from plugging into the jack at all. However, *the 7-pin connector on an amp's MIDI footswitch jack will still accept a 5-pin connection*. This means that two pins are left disconnected. Guess which two pins get left disconnected – the power pins. Since they are left disconnected, there is no physical path for the power to use to get from the amp to the controller. Since the five other pins are connected, MIDI messages travel just fine.

In short, you simply use a "normal" 5-pin MIDI cable to connect your amp and the G-System, and things will work fine – even if your amp has a 7-pin MIDI jack.

3.2.2 THE G-SYSTEM'S HIGHLY-FOCUSED MIDI IMPLEMENTATION

3.2.2.1 MESSAGES SENT ON PATCH CHANGE

If you stop to think about it for a moment, the complete configuration of an amp (channel, boost on/off, reverb on/off, etc) is also analogous to a MIDI Program. As such, it makes sense to change the amp configuration when the G-System changes presets. It also makes sense that if the amp supports MIDI then a Program Change message would be the right kind of message for the G-System to send to tell the amp to change its internal configuration.

As it turns out, this is exactly when the G-System does. If the G-System MIDI Out configuration is set to "On" or "On Map", then every time you use the foot controller to change MIDI presets, then the G-System will send out a Midi Program Change (MIDI PC), and possibly a bank select (MSB) message too.

3.2.2.1.1 HOW THE G-SYSTEM BEHAVES WHEN MIDI OUT = "ON"

In this mode, the G-System sends out a different set of MIDI Messages for each G-System preset, including the presets in the factory bank. The G-System memory holds 300 presets, 100 factory presets and 200 user presets. Since this exceeds the limits of the MIDI PC message, this means that a Bank Select message has to be sent to indicate a bank. This can be both confusing and problematic.

The confusion comes when you think of a bank on the G-System, and you probably think of the 5-preset banks you can select using the bank up/down buttons on the G-System foot controller. Unfortunately, this has *nothing* to do with MIDI bank select (not directly, at least). So we will talk about "Footswitch Preset Banks" and "MIDI Program Banks". You need to separate these two ideas in your head, and you need to be very careful when you discuss such things with others. There is a relationship, which you will see shortly – but it is non-trivial.

On the G-System, MIDI program banks have 100 presets in them (not 128). So the G-System sends MIDI Bank Select MSB followed by MIDI Program Change each time you change patches.

Note that the G-System sends nothing when the bank buttons are selected. The G-System waits until a preset is selected and then sends both messages, one immediately after the other.

Here is a chart that relates the G-System MIDI Banks to the G-System footswitch banks.

G-System Footswitch Bank	MIDI Bank Select (MSB)	MIDI Program Change
A0 thru B9	0	1-100
00 thru 19	1	1-100
20 thru 39	2	1-100

Examples:

- For G-System patch B1-3
    - The G-System will send out MIDI Bank Select MSB=0 per the table
    - Footswitch banks A0-A9 have 50 presets (10 footswitch banks, each with 5 presets)
    - Footswitch bank B0 has 5 presets
    - The preset we want is the number 3 preset of preset bank B1
    - So the program change number is 50 + 5 + 3 = 58
    - The G-System will send out MIDI Program Change = 58
- For G-System patch 21-4
    - The G-System will send out MIDI Bank Select MSB=2 per the table
    - Footswitch bank 20 has 5 presets
    - The preset we want is number 4 of preset bank 21
    - So the program change number is 5 + 4 = 9
    - The G-System will send out MIDI Program Change = 9.

Notice that if you ignore Bank Select messages, then there are three different G-System presets that correspond to each MIDI program change number. This can be problematic. The problem comes when you understand that, very often, amps and amp switchers do not respond to MIDI bank select messages. The vast majority of these devices support only 128 programs and have no support for MIDI banks at all. These devices will *ignore* the bank select message. What does this mean?

When you select G-System preset A0-1, the amp will ignore the bank select message and choose its preset 1. When you select G-System preset 00-1, the amp will ignore the bank select message and choose its … preset 1. When you select G-System preset 20-1, the amp will ignore the bank select message and choose (you guessed it) preset 1. This can be confusing if you program your amp to be clean on G-System preset 00-1 and subsequently program it to be distorted on G-System preset 20-1. You will find, when you go back to 00-1, it is distorted and not clean.

This also means that, if your amp supports 128 MIDI programs (pretty common), then you can't use the upper 28, since in this MIDI output mode (Midi Program Change Out = "On") the G-System won't ever send a PC whose value is greater than 100.

It is rare for MIDI amp switchers and MIDI-enabled amps to support bank select messages, so you need to be VERY careful and aware of:

1) What sounds your are putting into each of the 100 or so programs on your amp
2) How the G-System will select between these

So, if you have to keep track if this anyway, why not take control of the mapping yourself rather than dealing with the confusion and inflexibility of having the G-System do it? You can! That's what MIDI program mapping on the G-System is all about.

3.2.2.1.2 HOW THE G-SYSTEM BEHAVES WHEN MIDI OUT = "ON MAP"

When a MIDI program on your amp includes a lot of parameters (a program on my H&K Switchblade stores channel, tone control, gain, loop status, master volume in each program), the method above makes sense to some degree. It might be hard to decide on a pre-defined small group of amp patches that are all that you will ever use in this case, and doing a unique amp patch for every G-System patch makes sense.

But what if your amp uses MIDI only to select from one of three channels and perhaps includes the states of a gain boost and the loop? How many different configurations are you really going to have? (In the given example presented here would have all of 12 different combinations). In such a case, it makes more sense to pre-define a set of configurations and then program each patch to select the configuration you want to use. You can let all the G-System presets that use the same amp configuration, for example the lead channel with the boost on, share the same MIDI program on the amp.

Or suppose that you have an amp or amp switch that only supports 128 programs. Or perhaps you have one that has fixed programs. My own systems are excellent examples:

- My prior preamp, a VHT Valvulator, had 128 pre-defined programs, one for (almost) every possible combination of settings. It also had a table in the back of the owner's manual enumerating the state represented by every factory program.
- My Egnater M4 has 8 channels. While it responds to 128 midi PC programs, it only has 8 possible unique states (one state for each channel). As delivered from the factory, MIDI PCs 1-8 correspond directly to channels 1-8. (Wouldn't it be neat if there were a way to simply tell the G-System "on this patch and that patch, use channel 5"?)
- My Hughes & Kettner Switchblade lets me store programs, but only 128 of them. It has no support for MIDI Bank Select messages.

The net: the "On" mode of the G-System MIDI is utterly useless with one of these three amps. Further, if I choose to use one-to-one mapping between the G-System and the other amps, I can't use the upper user banks of the G-System at all, since there will be PC number collisions between the patches in the upper and lower G-System user banks.

Fortunately, the G-System has another MIDI PC mode that lets you hand-select the MIDI program number that gets sent for each G-System preset. This method has the advantage of working well for all of the situations described where there are issues with using the one-to-one mapping method. It also makes it much easier to see and control the relationship between amp patches and G-System presets.

When you set the "On Map" mode on the G-System, you get to explicitly control which program change message goes to your amp for each G-System preset. This lets you share (or not) amp configurations between G-System presets as *you* see fit. It also means that you have a place to go see exactly what is being done MIDI-wise on each preset. I end up using "On Map" for almost everything, and I think this is the right solution for the majority of amps and amp switchers available today.

3.2.2.2 MESSAGES THAT CAN BE SENT BY PRESSING A BUTTON

Look at the individual buttons on the top two rows of the G-System foot controller. Most of these let you toggle individual FX and loops on and off without changing presets. Wouldn't it be nice if you could do similar things with your amp from the G-System? You can if your amp MIDI implementation has MIDI Control Change (CC) support.

You can reprogram a button to send a MIDI CC message whenever the button is pressed. This will only support toggles, since the buttons only have two states (on and off). My favorite use of this feature is to use an amp's built-in boost (or "second master") rather than the G-System boost. I turn off the G-System boost and then reprogram the G-System Boost button send the appropriate MIDI CC message to toggle the amp boost. It works and sounds great.

3.2.2.3 LIMITED INBOUND MIDI IMPLEMENTATION

The G-System is meant to *be* the controller for your rig, not to respond to some other device that acts as controller. As such, the inbound MIDI capabilities of the G-System are pretty limited. You can have a controller send the G-System MIDI Bank Select and Program Change messages to select presets. The G-System also responds to some MIDI performance (aftertouch, pitch bend, control change) messages, but the documentation on using these is nonexistent, and few people seem to have attempted to use these features beyond making the G change presets.

3.2.2.3.1 MIDI THRU AND MIDI OUT

The MIDI specification is quite clear about the function of MIDI ports. Messages coming into the MIDI In are *not* to be echoed to the MIDI Out – that's what the MIDI Thru port is for. Nor are any messages that would be generated as a direct result of incoming messages to be passed to the MIDI Out. Again, such messages should be passed to the MIDI Thru port. This behavior prevents MIDI feedback loops in more complex installations.

The problem is that the G-System has no MIDI Thru port. As such, any messages received by the G-System from an external controller will not leave the G-System. What this means, in simple terms, is that if you use the G-System to control an amp, and you use another foot controller or computer to control the G-System, the MIDI CC and PC messages sent to the G-System *will not* be passed to the amp. Nor will the G-System use the MIDI map and send mapped program change messages in response to received program change messages.

If you want Program Change data to go to your amp in such a setup, you will need a MIDI Thru box to split the MIDI out of your controller/computer into two copies, one sent directly to the G-System to switch its presets, and one sent directly to the amp to switch its presets. Mapping and such will have to be done from the controller, not the G-System. It would, incidentally, probably be intelligent to set the MIDI channels on the amp and the G-System to different numbers so the controller can influence which messages get processed by which device.

3.2.3 CONFIGURING THE G-SYSTEM TO CONTROL AN AMP THROUGH MIDI

3.2.3.1 *HOW TO*: SET UP BASIC MIDI COMMUNICATION

You need to connect the G-System and the amp for MIDI, and set the G-System and the amp up to talk to each other using the same channel. This also applies to connecting the G-System to 3rd-party MIDI switchers. Here is how to do so:

1) Connect the G-System MIDI Out to the Amp MIDI In using a standard (5-pin) MIDI cable.
2) Following instructions from your amp's (or MIDI switcher's) documentation, set the MIDI channel to 1 (no "OMNI").
3) Set the MIDI Channel on the G-System
    a. Edit>Menu>[MIDI]>Enter>[Midi Channel] = ***1***
    b. Edit>Edit
4) Set the G-System to send program change messages
    a. Edit>Menu>[MIDI]>Enter>[Program Change Out] = ***On***
    b. Edit>Edit

3.2.3.2 *HOW TO*: USE MIDI LEARN FOR NON-MAPPED MIDI PROGRAM CHANGES

If you are not using the program map, then you need to teach the amp what settings to use for each patch you select on the G-System. (Remember, you are not using the program map if MIDI Program Change Out = On).

Here is how to do it:

1) Program your G-System patch and configure your amp to get the sound you want.
2) Save your G-System patch
    a. Go to the preset store menu
        i. Edit>Menu>[Preset]>Enter>[Store]
    b. Use Encoder A to select the location to store the new preset.
    c. Use Encoders B and C to set the preset name (if you want)
    d. Enter>Edit>Edit
3) Following instructions from your amp's (or MIDI switcher's) documentation, put the amp or switcher in "learn" mode.
4) Select the G-System patch that you saved in step 2. Yes, that is the currently-selected patch. But the PC message will be sent to the amp again, and since the amp is in learn mode, it will "remember" the PC number from then on.

At this point, any time you select the patch you created, the amp should switch to the configuration you want.

3.2.3.3 *HOW TO*: CONFIGURE MIDI PROGRAM MAPPING

If you want to use the MIDI program map to control selection of amp/switcher configurations, here is how to do it:

1) Program the one or two dozen possible configurations into your amp (if they are not already there. In the case of my VHT Valvulator GP3 and the Egnater M4, all of the possible programs were already pre-defined at the factory. How nice is that?!)
    a. It is up to you what system you use to organize things. Whatever you do, write it down unless the amp patches you want to use came pre-programmed and are already listed in the amp manual somewhere.
2) Put the G-System in PC="ON Map" mode
    a. Edit>Menu>[MIDI]>Enter>[Program Change Out] = ***On Map***
    b. Edit>Edit

Whenever you want to set the amp program to use with a patch, do the following:

1) Edit>Menu>[MIDI]>Enter>[Prg. Map]>Enter
2) Use Encoder B to select the G-System patch that you want to configure

3) Use Encoder C to select the amp/switcher patch that should be selected when the given G-System preset is selected.
4) Repeat Steps 2 and 3 for other G-System patches as you see fit.
5) Edit>Edit

3.2.3.4 *HOW TO*: REPROGRAM A BUTTON TO SEND A MIDI CC MESSAGE

If your amp or switcher can toggle features (FX Loop, Boost, etc.) in response to MIDI CC messages, then you can reprogram a G-System button (one that you don't use for something else) to control that feature directly. Here's how:

1) Look at page 44 of the G-System manual and select the button you want to reprogram. Take note of the button number.
2) Look in your amp/switcher documentation and get the MIDI CC number that is associated with the feature that you want to control.
3) Go into the edit mode where you can reprogram the buttons
    a. The menus call these "switches", which is wrong. Please don't ask me why.
    b. Edit>Menu>[Switches]>Enter
4) Use the PAGE encoder to select the button you wish to reprogram.
5) Scroll Encoder A until you have selected "MIDI CC" as the button function.
6) Use Encoder B to select the MIDI CC number that you found in step 2.
7) Exit Edit Mode
    a. Edit>Edit

3.3 USING THE G-SYSTEM WITH THE NOVA DRIVE USING THE Y-CABLE

The G-System will work well with any number of different pedals in its loops. One stands out however. The Nova Drive, another TC Electronics pedal, was specifically designed to integrate seamlessly with the G-System. When properly-connected, the G-System can completely control the Nova Drive – right down to its parameter settings. It is as though the Nova Drive were built right into the G-System.

Well – almost. There are a couple of subtleties that you need to be aware of. First, you need to know what it means for the G-System and Nova Drive to be "properly-connected". Second, you need to understand how G-System patches and Nova Drive patches relate to each other. This section attempts to provide some clarity in both these areas.

3.3.1 MIDI CONSIDERATIONS FOR THE NOVA DRIVE AND G-SYSTEM

In order to achieve the seamless integration of the Nova Drive and G-System and enable the G-System to continue to work with MIDI-enabled amps and switchers with the Nova Drive

present, the engineers at TC Electronic had to take a number of factors into account, and they had to leverage an additional capability of the MIDI specification.

3.3.1.1 MIDI SYSEX MESSAGES

The problem with defining any standard that applies to controlling many different pieces of equipment is that, invariably, some pieces of equipment will have capabilities that are not addressed in the standard. Further, it is impossible to define a standard for configuring this equipment, since the configuration parameters are different for almost every device. The MIDI specification was designed with a "loophole" that lets you use standard MIDI messages like PC and CC messages to do "standard" things, but then also control device-specific things as well, through the mechanism of a MIDI System Exclusive, or "Sysex" message.

A MIDI Sysex message contains a small header indicating what device the message applies to and how much data is present, and then a big block of data in a format defined by the device. Each device that handles MIDI Sysex messages has a unique Sysex ID, and all devices ignore messages associated with any ID except their own. The format and interpretation of the block of data in a MIDI Sysex message is left undefined by the MIDI spec, so manufacturers can put anything they want into such messages.

The most common use of MIDI Sysex messages is for communicating configuration information between software on a computer and a device. When you "back up" (bulk dump) the G-System to your computer, MIDI Sysex messages are what go back and forth between the computer and the G-System carrying both the request and the data. When the G-System editor is synchronized with the G-System, it is sending the G-System MIDI Sysex messages to change G-System configuration parameters.

But this is not the only way that Sysex messages can be used. You can send messages meaning *anything* to and from a device using Sysex messages, as long as the device is programmed to recognize them. . If you wanted to, you could send a picture using MIDI Sysex messages – although that is not terribly common. It is even permissible to have messages that mean the same things as standard MIDI messages – and this is a more useful trick than you might initially think – as you will see shortly.

3.3.1.2 WHY USE THE "Y-CABLE" RATHER THAN A STANDARD MIDI CABLE?

When properly connected using a specifically-designed Y-Cable (available from your favorite TC Reseller), the G-System and Nova Drive communicate almost exclusively using MIDI Sysex messages. In this configuration, even when the G-System wants to change patches on the Nova Drive, it uses MIDI messages that your amp will ignore. Further, because the G-System can find the Nova Drive and talk to it regardless of the MIDI channel being used on the Nova Drive, you can (and should) set the Nova Drive to a different MIDI channel than your G-System. With the

Y-cable installed, the G-System will still be able to talk to the Nova Drive. By doing this, you separate the message traffic between the G-System and the Nova Drive from the traffic between the G-System and the amp. A conversation between the G-System and the Nova Drive will not cause any change in the amp configuration or behavior.

If you do not separate communication between the Nova Drive and the amp, then the G-System uses the same method and messages for communicating with the Nova Drive as the ones used to communicate with your amp or amp switcher. These are not device-directed, since the Nova Drive will have to be on the same channel as the G-System in order for the Nova Drive to see the messages coming from the G-System. But the amp/switcher is already on that channel too – so you will have two devices on the same channel. So if you have your G-System hooked to both your amp and the Nova Drive via MIDI without the Y-Cable, when the G-System sends a MIDI PC message, it will go to both the amp and the Nova Drive. Both will respond. This means you have to keep your amp patches and Nova Drive patches completely synchronized.

This is much harder than it seems, especially if the amp and Nova Drive organize patch banks differently – which they almost certainly do. The Nova Drive only supports 18 patches; probably far-fewer than your amp, and certainly far-fewer than the 300 on the G-System. The net is that, if you use MIDI to control your amp, you will find it almost impossible to control the Nova Drive without messing up the control of everything else, *unless* you use the Y-Cable method.

Further, the Y-Cable enables communication in both directions. Messages can go from the G-System to the Nova Drive, which you could get using a standard MIDI cable. With the Y-Cable, messages can also be sent from the Nova Drive back to the G-System. You can't do that with a standard MIDI cable. The integration of the G-System and Nova Drive requires communication in both directions – hence the need for the Y-Cable. If you don't use the Y-Cable, then you can't use the G-System menus to edit Nova Drive parameters, and when you change things on the Nova Drive, the changes will not show in the G-System menus.

You get the point. If you use the G-System with the Nova Drive, use the Y-Cable. Don't even try to do anything different. You'll go nuts.

3.3.1.3 THE NOVA DRIVE HEARTBEAT

You should also note that there is a "heartbeat", or "keep alive" signal that permits the G-System to confirm that the Nova Drive is present. You can disconnect the Nova Drive MIDI from the G-System, and the G-System will "see" that the Nova Drive is no longer there. Similarly, if you turn on the G-System and forget to plug in the Nova Drive MIDI, then you can connect the Nova Drive MIDI to the G-System and the G-System will "discover" the Nova Drive and start interacting with it shortly thereafter.

3.3.2 CONFIGURING THE NOVA DRIVE

In order to let the Nova Drive and G-System speak to each other without messing up your amp switching, you need to properly configure the Nova Drive so the communications between the Nova Drive and G-System are "hidden" from your amp. This is counter-intuitive, but the G-System can tell that a Nova Drive is present even when the G-System and Nova Drive are on different MIDI channels. The G-System sends a Sysex message out that means (essentially), "is there a Nova Drive out there?" If any other device sees that message, it ignores the message, since the message is tagged as a "Nova Drive Sysex".

If there is a Nova Drive present, however, then it will hear this message and answer the G-System with something like "yep! I'm on channel 3". This is pretty cool. You don't have to configure anything to make the G-System talk to the Nova Drive if you use the Y-Cable to connect. When this little conversation finishes, the G-System displays a little "Nova Drive Detected" message. I have oversimplified this to a degree, since there may also be a mechanism for the Nova Drive to initiate the conversation – but it really does not matter.

This initial conversation between the Nova Drive and the G-System is important. It is actually the thing that enables you to separate messages bound for the Nova Drive from those bound for an amp or amp switcher. Why? Because the way to accomplish this is to configure the Nova Drive to use a *different* channel from the G-System and the amp. The G-System will communicate with the amp/switcher using the MIDI channel configured in the G-System MIDI menus. The G-System will communicate with the Nova Drive using the MIDI channel discovered during that "handshake" conversation mentioned earlier – *not* the channel from the MIDI menus. Since the messages are on two different channels, the Nova Drive will see-but-ignore messages intended for the amp, and the amp will see-but-ignore messages intended for the Nova Drive.

3.3.2.1 *HOW TO*: CONFIGURE NOVA DRIVE MIDI WHEN USING THE Y-CABLE

Here is how to set the channel on your Nova Drive.

1) Go into the G-System MIDI Menu and see what channel the G-System and amp are using to communicate with each other.
    a. Edit>Menu>[MIDI]>Enter>MIDI In Channel
    b. Read the value from the display
    c. Edit>Edit
2) Select a different channel (1-16) from the one you read from the G-System in the prior step.
3) Set the Nova Drive MIDI channel to the one you chose in step 2.
    - Press and hold the SWITCH MODE button for three seconds.

- While holding the SWITCH MODE button, turn the PRESET encoder until the desired MIDI channel is shown in the display.
- Release the SWITCH MODE button.

3.3.3 CONNECTING THE NOVA DRIVE USING THE Y-CABLE

You have a few options for connecting the NovaDrive to the G-System using the Y-cable. This section describes each option. Choose the one that best applies to you.

3.3.3.1 *HOW TO*: CONNECT THE NOVA DRIVE WHEN NOT USING MIDI FOR ANYTHING ELSE

If you are not using MIDI to control an amp or amp switcher, connecting the Nova Drive to the G-System is pretty easy. Here is what to do:

1) Take the Y-cable connector labeled "To MIDI In" and plug it into the G-System "MIDI In" jack
2) Take the Y-cable connector labeled "From MIDI Out" and plug it into the G-System "MIDI Out" jack
3) Take the remaining Y-cable connector and plug it into the Nova Drive MIDI jack.

3.3.3.2 *HOW TO*: CONNECT THE NOVA DRIVE WHEN YOUR AMP HAS A MIDI THRU JACK

If you are controlling and amp or amp switcher using MIDI and the amp/switcher has a MIDI thru port, you can configure as follows to enable the G-System to talk to both the amp and the Nova Drive.

1) Take the Y-cable connector labeled "To MIDI In" and plug it into the G-System "MIDI In" jack
2) Take the Y-cable connector labeled "From MIDI Out" and plug it into the amp/switcher's MIDI Thru jack
3) Take the remaining Y-cable connector and plug it into the Nova Drive MIDI jack.
4) Using a standard (5-pin) MIDI cable, connect the G-System "MIDI Out" to the amp/switcher's MIDI In.

3.3.3.3 *HOW TO*: CONNECT THE NOVA DRIVE WHEN YOUR AMP DOES NOT HAVE A MIDI THRU JACK

If you are controlling both an amp/switcher and the Nova Drive using MIDI, and your amp does not have a MIDI Thru jack – or if you want to avoid two long MIDI cables between the pedalboard (holding the G-System and the Nova Drive) and the amp, then you can get a 2-port

MIDI Thru box (MIDI Solutions sells an inexpensive and reliable one, for example) and wire as follows:

1) Take the Y-cable connector labeled "To MIDI In" and plug it into the G-System "MIDI In" jack
2) Take the Y-cable connector labeled "From MIDI Out" and plug it into one of the MIDI Thru jacks on the MIDI Thru Box
3) Take the remaining Y-cable connector and plug it into the Nova Drive MIDI jack
4) Using a (short) standard (5-pin) MIDI cable, connect the G-System "MIDI Out" to the MIDI Thru box's MIDI In
5) Using a standard (5-pin) MIDI cable, connect the remaining MIDI Thru on the MIDI Thru Box to the Amp/Switcher's MIDI In

3.3.4 NOVA DRIVE VS G-SYSTEM PATCHES AND PATCH NUMBERS

It bears repeating that the Nova Drive supports only 18 presets. This is far fewer than the 300 presets available on the G-System. As such, you will almost-certainly need to have G-System presets share Nova Drive presets. When you use the Y-Cable for complete integration, here is how the G-System manages presets on the Nova Drive.

- The G-System stores a Nova Drive preset number in each G-System Preset.
    - This is ALL of the information about the Nova Drive that is stored inside the G-System.
    - The Nova Drive preset has nothing to do with the G-System Midi Program Map. You can have one PC number in the program map, and a different preset number for the Nova Drive.
    - The G-System also acquires the parameters for the current Nova Drive preset – but it only keeps them in its edit buffer and memory – it does not store them locally. When you power off the G-System, this information goes away. It will be refreshed from the Nova Drive the next time that the G-System and the Nova Drive connect.
- When you select a preset on the G-System…
    - The G-System looks up the associated Nova Drive preset and sends the Program Change request (or its logical equivalent) to the Nova Drive.
    - In addition to this, the G-System will send a MIDI PC message (and possibly a preceding Bank Select (MSB) message to another MIDI device, based on the settings in the G-System MIDI menu and MIDI map.
- When you save a preset on the G-System…
    - The G-System stores the current Nova Drive preset number in the G-System's preset record.

- The G-System also tells the Nova Drive to store the current Nova Drive parameters (overdrive gain, tone, etc.) to that Nova Drive preset.

3.4 USING THE G-SYSTEM WITH THE NOVA DRIVE USING A STANDARD MIDI CABLE

The best and most-reliable way to use the G-System and Nova Drive is to use the Y-Cable method as described above. That said, there may be instances where you don't have access to the Y cable, or you can't use it for some reason. Fortunately, the MIDI implementation inside the Nova Drive is complete enough that you can still do a lot on the Nova Drive from the G-System even if you don't have the Y-Cable.

3.4.1 COMPLICATIONS WHEN SWITCHING BOTH AN AMP AND THE NOVA DRIVE

If you are not using the Y-Cable to integrate the G-System and the Nova Drive and you are also using the G-System MIDI implementation to switch an amp, things can get complicated quickly. The Nova Drive already has a different patch/bank structure (18 presets with no MIDI banks) than the G-System (3 MIDI banks of 100 presets). Your amp/switcher probably has 128 presets with no MIDI banks (the most common configuration), which is different from both the G-System and the Nova Drive. Try to imagine what it will be like keeping all those patches properly synchronized – and how you are going to keep some control messages from going to one device and not the other. Sound hard? It is. It is also not worth it. Get a Y-Cable. Order one from overseas. Make one from the TC-supplied schematic. Just do it or you are in for some major headaches unless you have a lot of MIDI experience. This paper will not even attempt to help you with such a configuration. The author, quite frankly, would rather have a root canal 'sans anesthetic'.

If, however, the *only* MIDI device you are using with the G-System is the NovaDrive, then making the two units work well together without the Y-Cable is pretty easy. If this is what you are doing, then read on.

3.4.2 VIEWING THE NOVA DRIVE AS A PREAMP

From the perspective of programming the G-System to control the Nova Drive when no Y-Cable is present, all you have to do is rethink "what" the Nova Drive is in the context of MIDI. It is just another preamp. You do all of the same things with the G-System to control the Nova Drive that you would do when controlling any other MIDI-Controlled amp or preamp. This includes:

1) Using a standard 5-pin MIDI cable to connect the G-System MIDI Out to the preamp (Nova Drive) MIDI In

2) Setting the Nova Drive and G-System to the *same* MIDI channel.
3) Configuring the G-System MIDI Program Change Out in order to send PC messages to the Nova Drive.
4) (If you want to) – Reprogramming a button or two on the G-System to control the NovaDrive.

I am not going to repeat the details of how to accomplish these steps here. You can turn back a few pages, to the section titled "Configuring the G-System to Control an Amp Through MIDI." Where the text of that section says "amp" or "preamp", think "Nova Drive" instead, and you have almost all the information you need. I recommend that you program your sounds on the Nova Drive independently, and then use the MIDI Program Map in the G-System for mapping G-System presets to Nova Drive presets.

Note that the Nova Drive responds to MIDI CC as well as PC messages, so in addition to having the G-System send program changes when new presets are selected, you can also reprogram G-System buttons to turn the overdrive and distortion sections of the Nova Drive on and off independently.

To toggle the Nova Drive Overdrive section, use CC #21. To toggle the Nova Drive Distortion section, use CC #22. Again, see the section titled "How To: Program a Button to Send a MIDI CC Message," found earlier in this chapter.

SECTION 4: USING VOLUME AND EXPRESSION PEDALS

The G-System has connections for 4 foot pedals. These foot pedals can be used to control the volume of the G-System or specific FX parameters (Chorus Depth, Nova Drive Gain, etc.) while playing. As it turns out, selecting the right pedals, the right cabling, and configuring the G-System to respond to the pedals looks more complicated than it actually is. This section helps clear up some of the confusion and then shows you how to connect volume and expression pedals and configure the G-System to take advantage of them.

4.1 IMPORTANT BACKGROUND ON VOLUME AND EXPRESSION PEDALS

In order to make informed decisions about what pedals and cables to purchase and how to configure the G-System, it is helpful to understand a few basic things about volume and expression pedals and just how the G-System "talks" to them.

4.1.1 VOLUME PEDALS VS. EXPRESSION PEDALS

The first thing you need to understand is the difference between a volume pedal and an expression pedal as typically used in non-G-System rigs. There are really three key differences, and understanding them will help you to appreciate the unusual G-System usage of these pedals.

4.1.1.1 WHAT SIGNALS TYPICALLY PASS THROUGH A PEDAL?

Both volume and expression pedals are simple devices. Each is typically equipped with a variable resistor (usually called a "potentiometer", or "pot") that impedes signal flow by lowering the voltage that comes into the input. How much lower this voltage is depends on the position of the pot, which is controlled by moving the foot pedal up and down. The lowered voltage is what goes out the output. The net is that a signal comes into the pedal, and a "smaller" (lower voltage) copy of the same signal leaves the pedal. This is true for *both* expression and volume pedals.

As odd as it sounds, the most important difference between a volume pedal and an expression pedal (in typical usage) it ***not*** the type or impedance of the pot installed in the pedal. The most important difference between a volume pedal and an expression pedal is the *content* of the signal that passes through the pedal. In a volume pedal, the actual audio signal (the guitar signal) passes through the pedal. Hence, when the signal passes through the pot, the pot attenuates the signal (lowers the voltage), which results in less volume.

An expression pedal is really just a parameter control. The audio signal *does not* pass through an expression pedal, ever, in any configuration (typical or otherwise). Instead, the device (FX,

keyboard/synth, etc.) that is connected to the pedal generates a control signal (think of it as a "dummy" signal) that is passed through the pedal. The device knows the voltage that is sent out in the dummy signal, and it can read the voltage that comes back. Based on this, the device can "read" the position of the pedal and then use the reading to control just about anything that can be digitally-controlled.

This is why guitars do not get plugged into expression pedals. If you were to plug a guitar into an expression pedal, that expression pedal would effectively *become* a volume pedal (albeit, a pretty odd one – as we will soon see). Instead, you typically connect a volume pedal somewhere in your audio signal path and an expression pedal to some FX device that you want to control.

4.1.1.2 OF PERCEPTION AND POTENTIOMETERS

There is an interesting thing about how humans with healthy hearing perceive volume and volume-related parameters (like gain, frequency bands in an EQ, etc.). If you double the sound pressure levels entering the ear (or double the voltage of the signal), you do not "double" the perceived subjective volume or loudness. In fact, you don't even come close. Your ears do not respond in a linear manner to changes in volume. Instead, your ears respond "logarithmically" to volume. Since voltage is proportional to volume for purposes of our discussion, you can say that we respond logarithmically to voltage (sort of, anyway). If you take the volume of a 2 volt signal and double it to 4 volts, most people feel that is represents the same CHANGE in volume as the shift from 1 volt to 2 volts, or from 4 volts to 8 volts. (Notice the interestingly odd mathematical similarity between how we respond to volume and how we respond to pitch. Our "octave" is simply our perception of the approximate doubling or halving of frequency.)

As a consequence, using a pot that responds linearly to foot movement does not have the smooth, even effect on the sound that comes out that one would want. We want the volume coming out of a volume pedal to move in nice, even increments throughout the travel of the pedal. We don't want the perceived volume to get a little louder when traveling in one half of the pedal position, and then get a ton louder in the other half. In order to make this happen, a volume pedal has to "compensate" for how our ears (and brains) perceive volume. So a volume pedal typically has a "logarithmic" (or "audio") pot, rather than a linear pot.

With some important exceptions (mostly related to volume and pitch), parameters controlled by expression pedals tend to need linear changes to be properly perceived. As a result, most expression pedals have a linear pot rather than a logarithmic pot.

4.1.1.3 PEDAL CONNECTIVITY

Because of the differences in the way that they are typically used, volume pedals and expression pedals usually have different connectors and cabling requirements. A volume pedal usually takes

the audio signal from one device and passes it on (after attenuating it) to another. As such, it makes sense to have an input jack and an output jack so you can use separate cables for the input and output. On a mono pedal, these jacks are usually just typical ¼" TS jacks. In stereo pedals, there are usually 2 pairs of TS jacks.

With an expression pedal, the device sending the signal to the pedal's input has to be the device that receives the signal from the pedal's output. To save space and cost, therefore, expression pedals tend to have TRS jacks, where the ring carries the signal traveling from the FX device to the pedal, and the tip carries the signal traveling from the pedal to the FX device.

Here is a quick summary of the key differences between volume and expression pedals as described above.

4.1.2 PEDAL IMPEDANCE

If you read chapter 1, then you understand that an audio signal needs to pass from a "low" impedance output to a "high" impedance input. If you have a high impedance output, you need a "very high" impedance input at the other end of your audio connection, or you will get some interesting frequency-related effects that you probably will not like.

If your guitar contains the usual passive pickups and on-board tone stack, then it has fairly high output impedance. If you plug that guitar into a low impedance volume pedal, you will probably not be happy. If your guitar has active electronics, then the output impedance of the guitar is already buffered and a low-impedance volume pedal will work and sound fine. If you ask the guy at the counter at your local guitar/music store, he will tell you the same thing. Here is what he probably won't tell you: this analysis is only valid when you have your guitar plugged directly into the input of your pedal.

The choice of whether to use a high-impedance or low-impedance pedal is a function of the device that is directly connected to the input of the pedal. If your guitar is not plugged into the input jack of your volume pedal, then the type of electronics in your guitar is *irrelevant*. So when deciding what pedal to buy, you have to know where it will be plugged in, and whether *that* device's output is "happier" seeing a high-impedance or low-impedance input on the volume pedal.

Note – "true bypass" pedals can be considered "transparent". If you have your passive guitar plugged into a true bypass stomp box and then plug the output of the stomp box into the volume pedal, it is as though the stomp box does not exist and the guitar is plugged directly into the volume pedal. This is not to say that you should always have a high-impedance volume pedal after a true-bypass stomp-box. All it means is that the output impedance of the device positioned immediately before the stomp box determines the type of volume pedal that you need.

Pedal impedance in expression pedals is less important. Expression pedals tend to be lower impedance than volume pedals by convention, but not by necessity. Since the audio signal is not passing through an expression pedal, there is no potential for impedance mismatches to damage your tone. But the device to which an expression pedal is connected may be designed in such a way that some pedals work better than others.

4.2 HOW THE G-SYSTEM USES PEDALS

The G-System turns inside-out much of the wisdom of what types of pedals to use and how to connect them. To see why, you need to understand how the G-System "sees" volume and expression pedals.

4.2.1 G-SYSTEM VOLUME PEDALS ARE USED LIKE EXPRESSION PEDALS

The G-System uses expression pedals in a manner that is very similar to other multi-FX units. Volume pedals on the G-System, however, are just plain strange. Remember that there are three properties that differentiate a volume pedal from an expression pedal. Here is a table with a summary of those properties, along with a column showing how the G-System uses a connected volume pedal.

	Volume Pedal	Expression Pedal	G-System Volume
Signal Type	Audio	Control	Control
Potentiometer Type	Logarithmic	Linear	Either
Typical Jacks	Dual TS	Single TRS	TRS

Notice that the G-System volume pedal seems to be being used more like an expression pedal. This is a very good thing to keep in mind.

The most important thing to note is that when you connect a volume pedal to the G-System volume jacks, the G-System does *not* send the audio signal through the volume pedal. It reads the position of the volume pedal using the same method that it reads the position of an expression pedal. The volume is controlled digitally, in the second DSP section. So selection of a volume pedal for use with the G-System:

- has nothing to do with what type of electronics your guitar has,
- has nothing to do with what kind of stomp boxes are in your G-System loops, and
- has nothing to do with the fact that the G-System outputs and loop sends are (very) low impedance.

The only device that will ever interact with that pedal is the G-System, so you should be selecting a volume pedal that has properties that enable the G-System to accurately read the

position of the pedal through its entire range of motion. In fact, you can use a good expression pedal as a volume pedal on the G-System. We'll discuss that later.

4.2.2 PLUGGING PEDALS IN

After a lot of experimentation by several users, it has become clear that the G-System works best when TRS cables are used to connect *both* volume and expression pedals to the G-System. Yes, the manual says to use a TS-TS cable to connect volume pedals to the volume jacks. Experience has demonstrated, however, that the best results are achieved when using a TRS cable.

For expression pedals, of course, this is a non-issue. Expression pedals almost always connect this way. For volume pedals, though, there is a minor complication. A typical volume pedal does not have a TRS jack. It has separate TS jacks, one for input and one for output. What shall you do? The answer is simple, get a ¼" TRS-Dual TS "Y-Cable" adapter so you can fully connect the volume pedal to the G-System. It does not need to be fancy or expensive. Remember, no audio signal is passing through the cable. If the cable is durable and has the right plugs, then it will work well.

4.2.3 UNDERSTANDING VOLUME POSITION

When using a volume pedal with the G-System, you have two options for location of the associated volume control in the signal chain. Recall the G-System signal path in 4-cable configuration (repeated below).

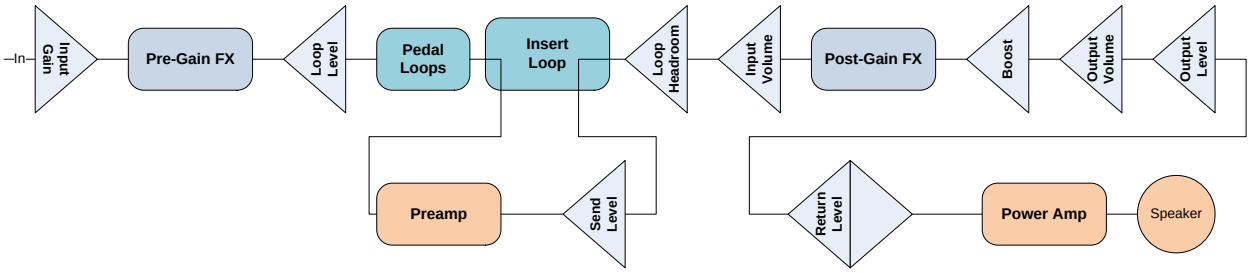

Your volume pedal is what controls either the *input volume* or *output volume* on this diagram. If you set the volume position (Global Levels Menu) to "Input", then the volume pedal will control the input volume. Similarly, if you set the volume position to "Output", then the volume pedal will control the output volume.

There is an important distinction between these two settings. Notice that the output volume comes after the post-gain FX. This means that the output volume will impact everything – including, for example, delay repeats – since the delay repeats will pass through the pedal just like the rest of the audio signal.

Now look at the input volume. It is positioned before the post-gain FX section. What this means, in practical terms, is that it directly effects only what *enters* the post-gain FX block. If it seems to make what comes out of that section quieter, it is only because it made the signal going into the post-gain FX block quieter, so the post-gain FX block worked with a quieter signal and hence, output a quieter signal.

Now think about lowering the input volume. What does it do to the "stuff" that is already being processed by the post-gain FX? Nothing! Consider the following sequence of events, taking place when a long delay is enabled.

Action	Volume Position = Input	Volume Position = Output
Guitarist plays a chord	Loud guitar	Loud guitar
Guitarist cuts volume using the volume pedal	Loud delay repeats	Soft delay repeats
Guitarist plays another chord	Soft Guitar + remaining loud delay repeats	Soft guitar + remaining soft delay repeats

Recall that delay repeats are already programmed to get softer as they repeat. If you have the volume position set to "output", you will accelerate the rate at which these delay repeats diminish. In fact, if you cut the volume off entirely by going to heel-down position in the pedal, then you will cut the delay repeats off entirely as well. This will not sound natural, and it is probably not what you want. For this reason, it is almost always best to set Volume Position to "Input" on the G-System – since this lets your delay repeats and reverberation "spill over" and decay naturally.

4.3 CONFIGURING VOLUME AND EXPRESSION PEDALS

The G-System pedal configuration is fairly complex, due to the fact that you have 4 jacks controlling 2 parameters, and each one of the 4 jacks can take either a volume pedal or an expression pedal. This section walks you through how to configure various combinations of pedals and jacks.

4.3.1 STARTING OFF ON THE RIGHT FOOT

The sensing circuits in the G-System that measure the pedal movement are very sensitive. But they rely on you providing accurate information about what pedals are plugged into which of the four jacks before they can function properly. Tell the G-System that a pedal is present in a jack when there is, in fact, no pedal connected, and the G-System will happily make all kinds of mistakes. You give it bad information, so it gives you bad behavior – "garbage in, garbage out."

This section assumes that you are hooking up pedals for the first time. As such, you (theoretically), don't have any pedals connected yet. (If you do, please unplug them from the G-System now.) As such, the G-System configuration should reflect this reality accurately.

4.3.1.1 HOW TO: PREPARE THE G-SYSTEM FOR VOLUME PEDAL CONFIGURATION

Here is how to tell the G-System that you have no pedals connected, and prepare it for configuration by putting other parameters in factory-default configurations.

1. Enter the Pedals menu (Edit → Menu → [Pedals] → Enter)
2. Set [Volume Ctrl] = ***Off***
3. Set [GFX Vol Type] = ***Off***
4. Set [GFX Exp Type] = ***Off***
5. Set [Ctrl Vol Type] = ***Off***
6. Set [Ctrl Exp Type] = ***Off***
7. Set [Vol Master] = ***Global***
8. Set [Exp Master] = ***Preset***
9. Exit the menu (Edit → Edit)

4.3.2 CONNECTING PEDALS PROPERLY

You have the potential of using two different types of pedals (volume or expression) connected to any of four different jacks (2 volume jacks and 2 expression jacks). If you have a pedal and plan on using for volume control, you should connect it to one of the volume jacks. Conversely, if you have a pedal and plan on using it for expression control, you should connect the pedal to one of the expression jacks.

No matter which G-System jack you use, you always connect a volume pedal one way and an expression pedal the other way. *It is the pedal type that determines the connection method, not the jack*. For example, if you want to connect a *volume* pedal to the GFX01 *expression* jack, then you should follow the instructions in 4.4.2.1 below for *connecting a volume pedal to the G-System*.

4.3.2.1 *HOW TO*: CONNECT A VOLUME PEDAL TO THE G-SYSTEM

As stated earlier, volume pedals have a tendency to have separate input and output jacks. Since the G-System has a TRS jack for both input from and output to a volume pedal, it is best to acquire a TRS-to-Dual-TS "Y-cable" so you can completely connect the volume pedal to the G-System.

No matter what jack you are connecting the volume pedal to, it should be wired as follows:

1. Connect the Y-cable TRS plug to the selected G-System jack
2. Connect the Y-cable "Tip" TS plug → volume pedal output jack
3. Connect the Y-cable "Ring" TS plug → volume pedal input jack

4.3.2.2 *HOW TO*: CONNECT AN EXPRESSION PEDAL TO THE G-SYSTEM

Expression pedals usually have a single TRS jack for both input and output. Some expression pedals have their chords built-in and don't even have a jack.

If your expression pedal has its own built-in cable then:

1. connect the TRS plug from that cable to the Selected G-System Jack

If your expression pedal does not have its own built-in cable then:

1. Acquire a TRS-TRS cable
2. Plug one end of the TRS cable into the selected G-System jack
3. Plug the other end of the TRS cable into the jack on the expression pedal

4.3.3 CONFIGURING PEDALS FOR VOLUME CONTROL

The G-System is flexible enough to allow you to use either a volume pedal (audio taper) or an expression pedal (linear taper) to control volume. The manner in which these need to be connected and configured for best results is a little different though.

4.3.3.1 *HOW TO*: USE A VOLUME PEDAL TO CONTROL VOLUME

1) Connect the volume pedal to either the GFX01 volume jack or the G-System foot controller volume jack per your preference, using the instructions from 4.4.2.1 above.
   a) *Remember* which jack to which you connected the pedal – GFX01 volume or foot controller volume
   b) If you do not have the G-System GFX01 in a rack, then you are plugging into the GFX01 volume jack
2) Enter the Pedals menu (Edit → Menu → [Pedals] → Enter)
3) Set [Volume Ctrl] = ***Vol***
4) If you connected the pedal to the GFX01 volume jack, then
   a) Set [GFX Vol Type] = ***Vol***
   b) Scroll to [GFX Vol Calib] and press Enter
   c) Put the pedal in heel-down (min) position and press enter
   d) Move the pedal slowly to the toe-down (max) position and then press enter
5) If you connected the pedal to the G-System foot controller volume jack then set
   a) Set [Ctrl Vol Type] = ***Vol***
   b) Scroll to [Ctrl Vol Calib] and press Enter
   c) Put the pedal in heel-down (min) position and press enter
   d) Move the pedal slowly to the toe-down (max) position and then press enter
6) Exit the menu (Edit → Edit)

4.3.3.2 *HOW TO*: USE AN EXPRESSION PEDAL TO CONTROL VOLUME

1) Connect the expression pedal to either the GFX01 *volume* jack or the G-System foot controller *volume* jack per your preference, using the instructions from 4.4.2.2 above.
   a) *Remember* which jack to which you connected the pedal – GFX01 volume or foot controller volume
   b) If you do not have the G-System GFX01 in a rack, then you are plugging into the GFX01 volume jack
2) Enter the Pedals menu (Edit → Menu → [Pedals] → Enter)
3) Set [Volume Ctrl] = ***Vol***
4) If you connected the pedal to the GFX01 volume jack, then
   a) Set [GFX Vol Type] = ***Exp***
   b) Scroll to [GFX Vol Calib] and press Enter
   c) Put the pedal in heel-down (min) position and press enter
   d) Move the pedal slowly to the toe-down (max) position and then press enter
5) If you connected the pedal to the G-System foot controller volume jack, then set
   a) Set [Ctrl Vol Type] = ***Exp***
   b) Scroll to [Ctrl Vol Calib] and press Enter
   c) Put the pedal in heel-down (min) position and press enter
   d) Move the pedal slowly to the toe-down (max) position and then press enter
6) Exit the menu (Edit → Edit)

4.3.3.3 *HOW TO*: SET THE VOLUME POSITION

As noted earlier, it is important to set the volume position on the G-System properly, so that spill-over effects will be able to spill over properly, even when the volume pedal is moved after the effects have started spilling over. Here is how to do so.

1. Enter the Global Levels menu (Edit → Menu → [Gbl Levels] → Enter)
2. If you want the volume pedal to allow delay repeats and reverbs to decay naturally (according to the effect settings) then
   a. Set [Volume Position] = ***Input***
3. Otherwise, you should set [Volume Position] = ***Output***
4. Exit the Menu (Edit → Edit)

4.3.4 CONFIGURING PEDALS FOR EXPRESSION CONTROL

As with the volume control, the G-System permits you to use either a volume pedal or an expression pedal as an expression controller.

4.3.4.1 *HOW TO*: USE AN EXPRESSION PEDAL TO CONTROL EXPRESSION

1) Connect the expression pedal to either the GFX01 *expr* jack or the G-System foot controller *expr* jack per your preference, using the instructions from 4.4.2.2 above.
   a) *Remember* which jack to which you connected the pedal – GFX01 expression jack or foot controller expression jack
   b) If you do not have the G-System GFX01 in a rack, then you are plugging into the GFX01 expression jack
2) Enter the Pedals menu (Edit → Menu → [Pedals] → Enter)
3) If you connected the pedal to the GFX01 expression jack, then
   a) Set [GFX Exp Type] = ***Exp***
   b) Scroll to [GFX Exp Calib] and press Enter
   c) Put the pedal in heel-down (min) position and press enter
   d) Move the pedal slowly to the toe-down (max) position and then press enter
4) If you connected the pedal to the G-System foot controller volume jack, then set
   a) Set [Ctrl Exp Type] = ***Exp***
   b) Scroll to [Ctrl Exp Calib] and press Enter
   c) Put the pedal in heel-down (min) position and press enter
   d) Move the pedal slowly to the toe-down (max) position and then press enter
5) Exit the menu (Edit → Edit)

4.3.4.2 *HOW TO*: USE A VOLUME PEDAL TO CONTROL EXPRESSION

1) Connect the volume pedal to either the GFX01 *expr* jack or the G-System foot controller *expr* jack per your preference, using the instructions from 4.4.2.1 above.
   a) *Remember* which jack to which you connected the pedal – GFX01 expression jack or foot controller expression jack
   b) If you do not have the G-System GFX01 in a rack, then you are plugging into the GFX01 expression jack
2) Enter the Pedals menu (Edit → Menu → [Pedals] → Enter)
3) If you connected the pedal to the GFX01 expression jack, then
   a) Set [GFX Exp Type] = ***Vol***
   b) Scroll to [GFX Exp Calib] and press Enter
   c) Put the pedal in heel-down (min) position and press enter
   d) Move the pedal slowly to the toe-down (max) position and then press enter
4) If you connected the pedal to the G-System foot controller volume jack, then set
   a) Set [Ctrl Exp Type] = ***Vol***
   b) Scroll to [Ctrl Exp Calib] and press Enter
   c) Put the pedal in heel-down (min) position and press enter
   d) Move the pedal slowly to the toe-down (max) position and then press enter
5) Exit the menu (Edit → Edit)

SECTION 5: SAMPLE CONFIGURATIONS

This section describes, in detail, the configuration of my own personal systems. I happen to have two G-Systems, one integrated in a complex studio arrangement, then other integrated in a more typical mobile (combo-amp based) configuration.

Both of these configurations reflect my very proactive philosophy as regards RF noise prevention. You will see that I make liberal use of balanced cables and isolation transformers. As a consequence, I have very quiet rigs. The primary source of noise in my rigs is induced noise from my pickups. Since I use humbuckers, the noise level is quite low. If I use enough gain to make induced noise an issue, then I use a gate as well.

For reference, I use these rigs with a wide array of guitars – and have no need to reconfigure when I go from guitar to guitar. These guitars include:

- PRS 20th Anniversary Custom 24 Artist (PRS humbuckers)
  - ✓ Schaller Strap Locks
- Yamaha Pacifica PAC-1511MS Mike Stern Signature (Duncan humbuckers)
  - ✓ Mike Stern's REAL signature in "Black Sharpie" on the body ;-)
  - ✓ Schaller Strap Locks

5.1 MOBILE RIG WITH COMBO AMP

This setup is pretty typical of most G-System users. Systems using both combo-amps and amp heads would be configured similarly. The amp is controlled through MIDI in only a limited manner.

5.1.1 EQUIPMENT

- TC Electronic G-System
- Hughes and Kettner Switchblade 100 Combo
  - ✓ Tube Preamp and Tube Power Amp
  - ✓ Intermediate Digital FX and Tone Stack
  - ✓ Midi Program Change Only – but the amp's MIDI programs remember tone/gain settings, amp channel, internal FX, and loop configuration.
- Ernie Ball EBjr. Volume Pedal
  - ✓ Audio-Taper
- (2) EbTech HE-2 Hum Eliminators
  - ✓ Mounted to the amp to make configuration and transport easier, and to ensure that the distance between the amp and the HE-2s is kept *short*.
  - ✓ Provides 4 channels of transformer isolation, 3 used all the time and one used for occasional forays into stereo-land when a "spare" amp is available for my right channel.
- Planet Waves instrument patch cables (custom made from their pedalboard cable kit)
- Mogami 4-channel TRS-TRS Recording Snake
- Elixir Guitar Cable
- MIDI Cable

5.1.2 CABLING

Cabling for this rig is very simple. I have the recording snake and MIDI cable joined using cable ties. I try very hard to keep the G-System power cable from coming anywhere near these cables. When they must cross, they do so only once and at (about) 90 degrees, and I tape them down in this orientation if I can. Since the long signal cable runs are all balanced and transformer-isolated, I have no RF issues that originate at these components.

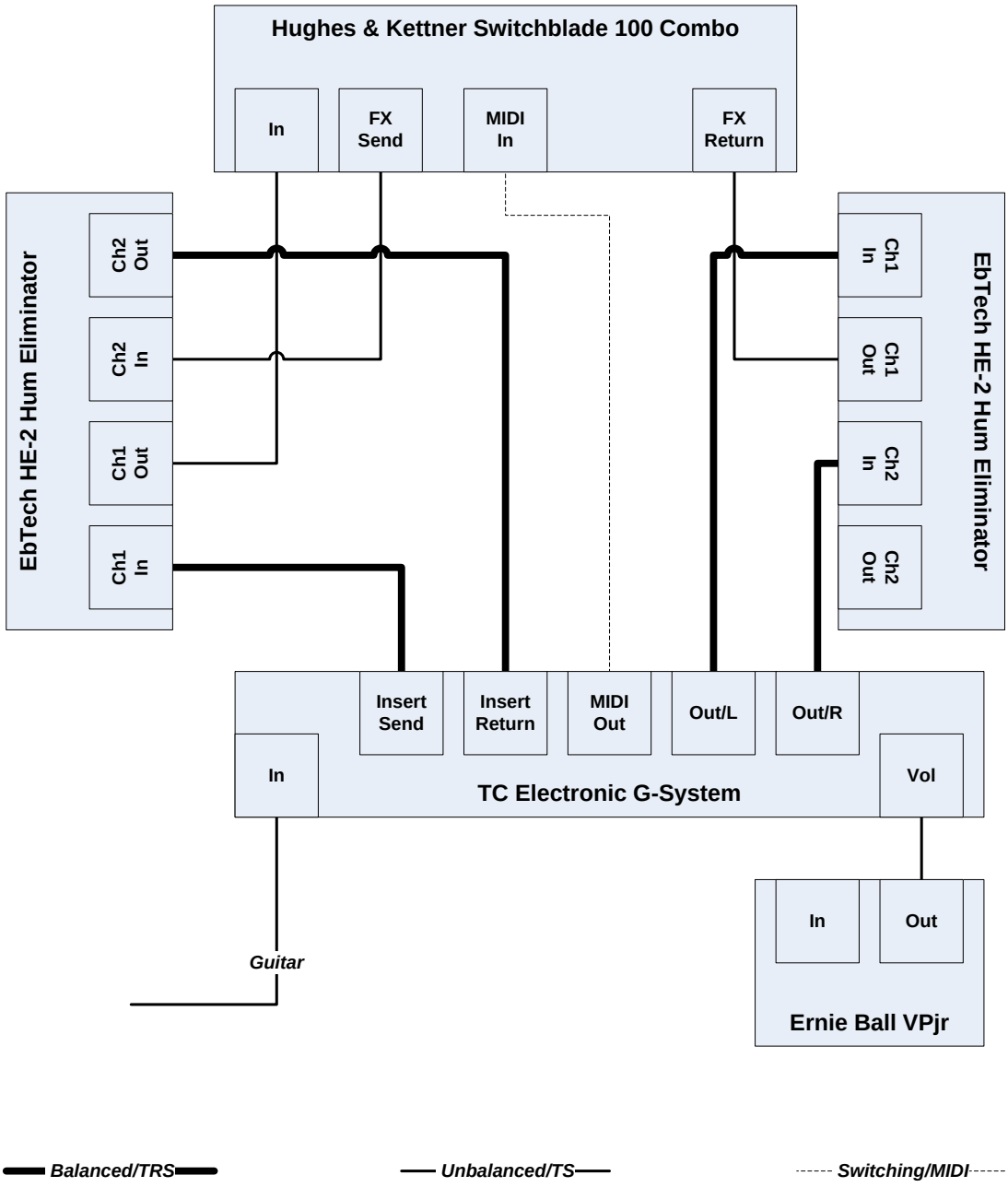

Figure 2 - Sample Gig Rig with Combo Amp

5.1.2.1 SIGNAL CABLING

- Guitar → Elixir Guitar Cable → G-System In (Rear)
- G-System Insert Send → Mogami Snake Channel 1 → EbTech HE-2 #1 Channel 1 In
- EbTech HE-2 #1 Channel 1 Out → Custom 18" Instrument Cable →Amp In
- Amp FX Send → Custom 12" Instrument Cable → EbTech HE-2 #1 Channel 2 In
- EbTech HE-2 #1 Channel 2 Out → Mogami Snake Channel 2 → G-System Insert Return
- G-System Left Output → Mogami Snake Channel 3 → EbTech HE-2 #2 Channel 1 In
- EbTech HE-2 #2 Channel 1 Out → Custom 12" Instrument Cable → Amp FX Return
- G-System Right Output → Mogami Snake Channel 4 → EbTech HE-2 #2 Channel 2 In
- (*) EbTech HE-2 #2 Channel 2 Out → Instrument Cable → Amp2 FX Return

(*) = Only when running stereo through second amp

5.1.2.2 CONTROL CABLING

- Ernie Ball EBjr <in> → Custom 18" Instrument Cable → G-System GFX-01 Volume Pedal Jack
- G-System MIDI Out → MIDI Cable → Hughes and Kettner Switchblade Footswitch/MIDI In

5.1.3 CONFIGURATION

5.1.3.1 G-SYSTEM GLOBAL LEVELS

5.1.3.2 AMP LOOP SETTINGS

5.1.3.3 MIDI SWITCHING

5.2 STUDIO RIG

This rig is far more sophisticated than the last. It makes heavy use of balanced cables and transformer isolation. It also makes use of a real power amp and a load box/cabinet simulator with the post gain FX coming after the cabinet – so the sound is much more like a mic'd cabinet than loop-based FX. The system also has a half-normal TRS patch-panel for insertion of studio FX or, more frequently, my Boss RC-50 LoopStation.

Inside the rack, all power cables are tied together down one side of the rack and connected to a rack-mounted power conditioner. The signal cables run down the opposite side of the rack and, where necessary, run out the bottom to go to the floorboard. This keeps the power and audio as isolated from each other.

My biggest challenge with this setup is not noise – it is heat. The tubes are hot and there are a lot of them. Add the heat dissipated by the speaker load and you get *a lot* of heat. I've had to perforate the back of the rack cabinet and install a large, slow (thus quiet) fan to vent the rack properly or I end up going through tubes like water.

You will also note the use of a signal buffer in this configuration. While I experienced no difference in tone when I used the G-System with the Switchblade in my gig rig, I heard a significant difference when running my guitar through the G-System front end when I first integrated things with my Egnater M4. Since this phenomenon was confined to the front end of the G, and the only thing being changed was the amp input circuit, I concluded that the Egnater input circuit must load the guitar pickups very differently than the Switchblade and G-System input do, despite the fact that all are rated at 1M-ohm input impedance. Fortunately, I needed a good noise gate anyway, since my studio is kind of RF-noisy and even my humbucking pickups manage to find some noise. So I have an ISP Decimator G-String pedal.

The front end of that pedal is also a signal buffer – so that is what buffers the signal into the G. It works and sounds great – but I found a couple of things. First, there was a ground loop between the decimator guitar out and the g-system input. I had to put a channel of isolation on the board to resolve this. This is in spite of having extremely-high-quality, isolated power supplies for the pedals and power conditioners for the main AC feed.

Second; While I found that the buffer on the G-String certainly improved my overall signal with the G-System, I got the best results by keeping my Valvulator buffer in the rig.

A point to be made here is that specs aren't everything – and doing good experiments is of paramount importance to getting your rig sounding its best. Input impedance is important, but it is not everything. The input impedance on the G-String is *less* than that on the G-System. But if we ignore the input impedances for a moment, the rest of the circuitry within the G-String loads the pickups much less than the rest of the input side of the G-System does. As such, the

G-String can have lower input impedance and will still load the guitar inputs less than the G-System input does. But you can't learn this by reading the specs. You have to try things out. The net is that the "front end" of the G-String still serves as a reasonably-effective buffer, despite the fact that its input impedance is lower than that of the G-System.

5.2.1 EQUIPMENT

- TC Electronic G-System
- Egnater M4 Preamp
  - ✓ 4-module (8-channel) Tube Preamp
  - ✓ Can be MIDI switched using MIDI PC Messages
    - Supports 128 presets.
    - Each preset stores channel number only
  - ✓ TDX (Twin-Deluxe, Fender-ish) Module
  - ✓ SL2 (Mashall-esque) Module
  - ✓ Vx (Vox-like) Module
  - ✓ COD (Dumble-like) Module
- TC Electronic Nova Drive
- Barber Tone Press parallel compressor
- Eventide ModFactor
  - ✓ Excellent Variety of Modulation FX
  - ✓ Used to add pre-gain FX to the rig, since G-System modulation FX are post-gain
  - ✓ Excellent MIDI Implementation
    - Can accept MIDI PC program numbers 1-128
    - Inbound MIDI Map, with each MIDI program number mapped to an internal ModFactor preset
- ISP Decimator G-String Noise Gate
  - ✓ Buffers guitar signal into G-System
  - ✓ Separate Detector and Gate for excellent tracking
- Randall RT2/50 Power Amp
  - ✓ Two Channels – KT77 (JJ) and 6L6GC (GE NOS)
  - ✓ MIDI Switchable between channels using PC Messages
    - Supports 128 presets.
    - Each preset stores channel number only
- Palmer ADIG-LB Load Box/Cabinet Simulator
  - ✓ Emulates a mic'd cabinet
  - ✓ Provides dummy load for the amp
  - ✓ Balanced, low-impedance output
  - ✓ Passive device, so no direct A/C grounding
- (2) Boss FV-500H Volume Pedals

    - For Expression and Volume
- Yamaha AW1600 16-Channel Digital Recording Workstation
    - ✓ Unbalanced Monitor outs – need balanced for long cable runs to monitors
- EbTech HE-8 Hum Eliminator
    - ✓ Mounted in the rack for isolation of most of the audio interconnects, both within the rack and those coming from the pedalboard
- EbTech HE-2 Hum Eliminator
    - ✓ For on-pedalboard isolation as-needed
- (2) Hosa MHB-350 4-channel Half-Normal TRS Patch Bay
    - ✓ For Jacking the PedalBoard into the rack without having to open the back
    - ✓ Also for inserting a stereo looper in-between the G-System and the recorder
    - ✓ Not pictured, since including it makes the diagram hard to read and most users don't bother with this anyway. Just imagine that every connection between the rack and the pedalboard goes through a patch bay that presents the appropriate jacks on the front panel of the rack.
- (2) Samson Rubicon R8a 8" Ribbon Monitors
- George-Ls custom-length instrument patch cables
- 20' Mogami 4-channel TRS-TRS Recording Snake
- Elixir Guitar Cable
- (2) 15' TRS-XLR Cables (for monitors)
- (2) 3' TRS-Dual TS Y-Cables (for volume and expression pedals)
- Hosa 18" TRS Patch Cables
- 18" TS-TS Speaker Cable
- Nova Drive MIDI Y-Cable
- (2) 18" MIDI Cables
- (4) Custom MIDI 5-pin/TRS Converter Cables

5.2.2 CABLING

It is easiest to view this rather complex system in two parts, the pedalboard and the rack unit.

5.2.2.1 PEDALBOARD

The diagram below depicts the wiring of my rather large (65lbs as of this writing) pedalboard. As you can see, all of the audio and switching signals enter and exit the board via a TRS-TRS patch bay that is intended to have a 6-8 channel TRS-TRS snake attached. There is an identical patch bay in the rack, so hookup is simply a matter of connecting corresponding jacks in each patch bay.

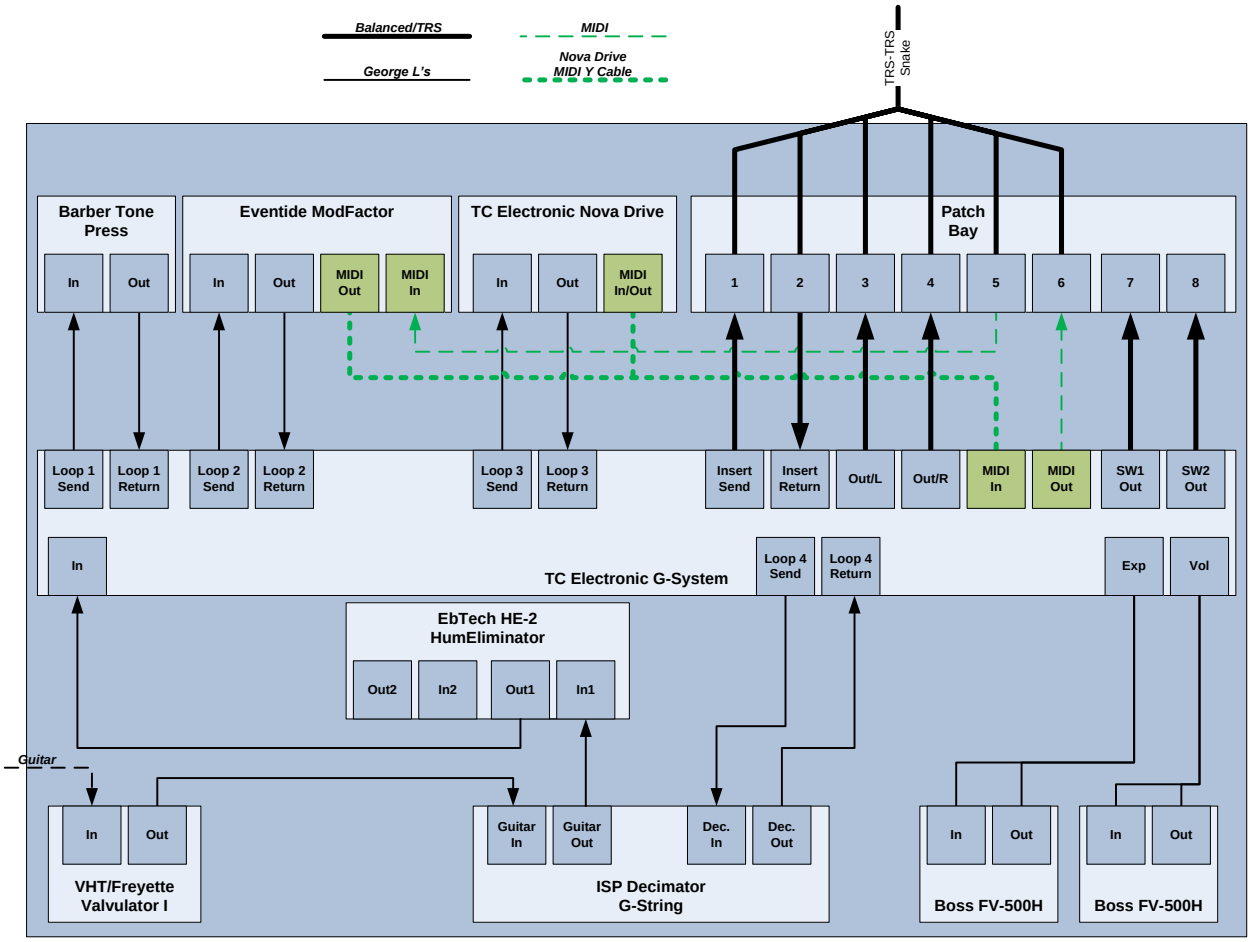

Figure 3 – Sample Studio Rig (Pedalboard)

5.2.2.1.1 PEDALBOARD AUDIO CABLING

Guitar to G-System Input

- Guitar → Elixir Guitar Cable → Valvulator In
- Valvulator Out → Custom Instrument Cable → G-String Guitar In
- G-String Guitar Out → Custom Instrument Cable → EbTech HE-2 Channel 1 In
- EbTech HE-2 Channel 1 Out → Custom Instrument Cable → G-System In

G-System Loops

- G-System Loop 1 Send → Custom Instrument Cable → Barber Tone Press In
- Barber Tone Press Out → Custom Instrument Cable → G-System Loop 1 Return
- G-System Loop 2 Send → Custom Instrument Cable → ModFactor In
- ModFactor Out → Custom Instrument Cable → G-System Loop 2 Return
- G-System Loop 3 Send → Custom Instrument Cable → Nova Drive In
- Nova Drive Out → Custom Instrument Cable → G-System Loop 3 return
- G-System Loop 4 Send → Custom Instrument Cable → G-String Decimator In
- G-String Decimator Out → Custom Instrument Cable → G-System Loop 4 Return

Insert Loop and Back End

- G-System Insert Send → 18" TRS Patch Cable → Patch Bay Jack 1
  - Proceeds to preamp input via snake and rack components
- Patch Bay Jack 2 → 18" TRS Patch Cable → G-System Insert Return
  - Comes from speaker emulator out via snake and rack components
- G-System Out/L → 18" TRS Patch Cable → Patch Bay Jack 3
- G-System Out/R → 18" TRS Patch Cable → Patch Bay Jack 4
  - G-System outs proceed to console inputs via snake and rack components

5.2.2.1.2 PEDALBOARD CONTROL CABLING

Pedals

- Boss FV-500H(1) In/Out Jacks → TRS-Dual TS Y-Cable → G-System GFX-01 Vol Jack
- Boss FV-500H(2) In/Out Jacks → TRS-Dual TS Y-Cable → G-System GFX-01 Expr Jack
- Boss FV-500H(2) Expr Jack → 12" TRS-TRS Patch Cable → ModFactor Expression Jack

MIDI

- G-System MIDI Out → MIDI-TRS Converter Cable → Patch Bay Jack 5
- Patch Bay Jack 6 → MIDI-TRS Converter Cable → ModFactor MIDI In
- ModFactor MIDI Thru → Nova Drive MIDI Y-Cable → Nova Drive MIDI In/Out
- Nova Drive MIDI In/Out → Nova Drive MIDI Y Cable → G-System Midi In

Switching

- G-System SW1 Out → 18" TRS-TRS Patch Cable → Patch Bay Jack 7
- G-System SW2 Out → 18" TRS-TRS Patch Cable → Patch Bay Jack 8
  - Neither of these is used at present

5.2.2.2 RACK

The diagram below depicts the guitar-relevant portion of my studio rack. Note the use of a patch bay to route signals to/from the pedalboard. You should note that the rig is configured in such a way that if I do not use the pedalboard, and simply plug the guitar into the front input of the preamp, I can still play through the system – just without all the FX.

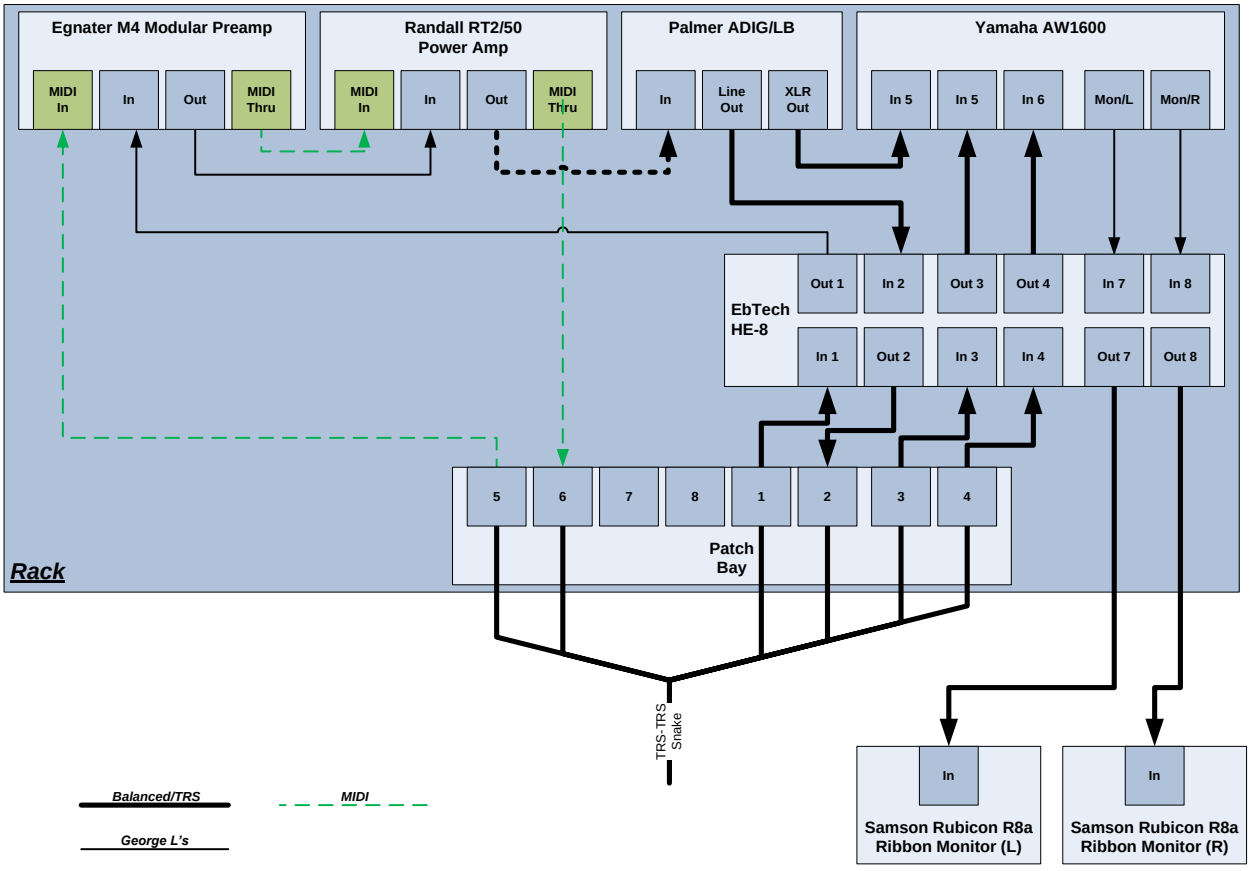

Figure 4 – Sample Studio Rig (Rack)

5.2.2.2.1 RACK AUDIO CABLING

Input Signal Comes From the Pedalboard to the Preamp Input

- Patch Bay Jack 1 (G-System Insert Send) → 18" TRS-TRS Patch Cable → EbTech HE-8 Channel 1 In
- EbTech HE-8 Channel 1 Out → Custom Instrument Cable → Egnater M4 In

Signal Passes Through the Power Amp and Speaker Emulator

- Egnater M4 Out → Custom Instrument Cable → Randall RT2/50 Power Amp In
- Randall RT2/50 Power Amp Speaker Out → 18" Speaker Cable → Palmer ADIG-LB In

Speaker Output Goes Directly to the Console and Also Back to the Pedalboard

- Palmer ADIG-LB XLR Out → 18" XLR-XLR Patch Cable → Console Channel 4 Mic In
- Palmer ADIG-LB Line Out → Custom Audio Cable → EbTech HE-8 Channel 2 In
- EbTech HE-8 Channel 2 Out → 18" TRS-TRS Patch Cable → Patch Bay Jack 2 (G-System Insert Return)

G-System Outputs Come Into the Console

- Patch Bay Jack 3 (G-System Out/L) → 18" TRS-TRS Patch Cable → EbTech HE-8 Channel 3 In
- EbTech HE-8 Channel 3 Out → 18" TRS-TRS Patch Cable → Yamaha AW1600 Channel 5 In
- Patch Bay Jack 4 (G-System Out/R) → 18" TRS-TRS Patch Cable → EbTech HE-8 Channel 4 In
- EbTech HE-8 Channel 4 Out → 18" TRS Patch Cable → Yamaha AW1600 Channel 6 In

Console Output to Powered Monitors

- Yamaha AW1600 Monitor Out/L → Custom Audio Cable → EbTech HE-8 Channel 7 In
- EbTech HE-8 Channel 7 Out → 15' TRS-XLR Cable → Samson Rubicon R8a #1 In
- Yamaha AW1600 Monitor Out/R → Custom Audio Cable → EbTech HE-8 Channel 8 In
- EbTech HE-8 Channel 8 Out → 15' TRS-XLR Cable → Samson Rubicon R8a #2 In

5.2.2.2.2 RACK CONTROL CABLING

MIDI

- Patch Bay Jack 5 (G-System MIDI Out)→ MIDI-TRS Converter Cable → Egnater M4 MIDI In
- Egnater M4 MIDI Thru → 12" MIDI Patch Cable → Randall RT2/50 MIDI In
- Randall RT2/50 MIDI Thru → MIDI-TRS Converter Cable → Patch Bay Jack 6 (ModFactor MIDI In)

5.2.3 G-SYSTEM CONFIGURATION

This configuration works very well and has a low noise floor. I sometimes need to use a noise gate when I use the Nova Drive OD channel to feed some of the higher-gain modules of the preamp – but that's about it. It is pretty clear from experimentation that even this noise is amplified pickup noise, and is not introduced elsewhere in the signal path.

5.2.3.1 GLOBAL LEVELS

- Input Gain 6dB
- Loop Level 10dB
- Loop Headroom 2dB
- Output Level 0dB
- Volume Position Input
- Boost Max 0dB
- Input Select Rear

5.2.3.2 UTILITY

- Boost Lock On (With Boost OFF)
- Insert Lock On (With Insert Loop On)
- Relay Lock On (With relays set to OOOO OOOO A)
- EQ Lock On (With EQ Off) – (* this may change in time, but for now…)
- Routing Lock Off
- Factory Bank Lock Off
- KillDry Off

5.2.3.3 RELAYS

This system makes no use of the relay switching capabilities of the G, since all the devices being managed by the G are MIDI-Switchable.

5.2.3.4 MIDI

- MIDI Channel 1
- Program Change In OFF
- Program Change Out On Map

5.2.3.5 PEDALS

- GFX Vol Type Vol
- GFX Expr Type Vol
- Ctrl Vol Type None
- Ctrl Expr Type None
- Vol Master Global
- Exp Master Preset
- Volume Ctrl Vol