# Neumann/Telefunken U47 Schematic

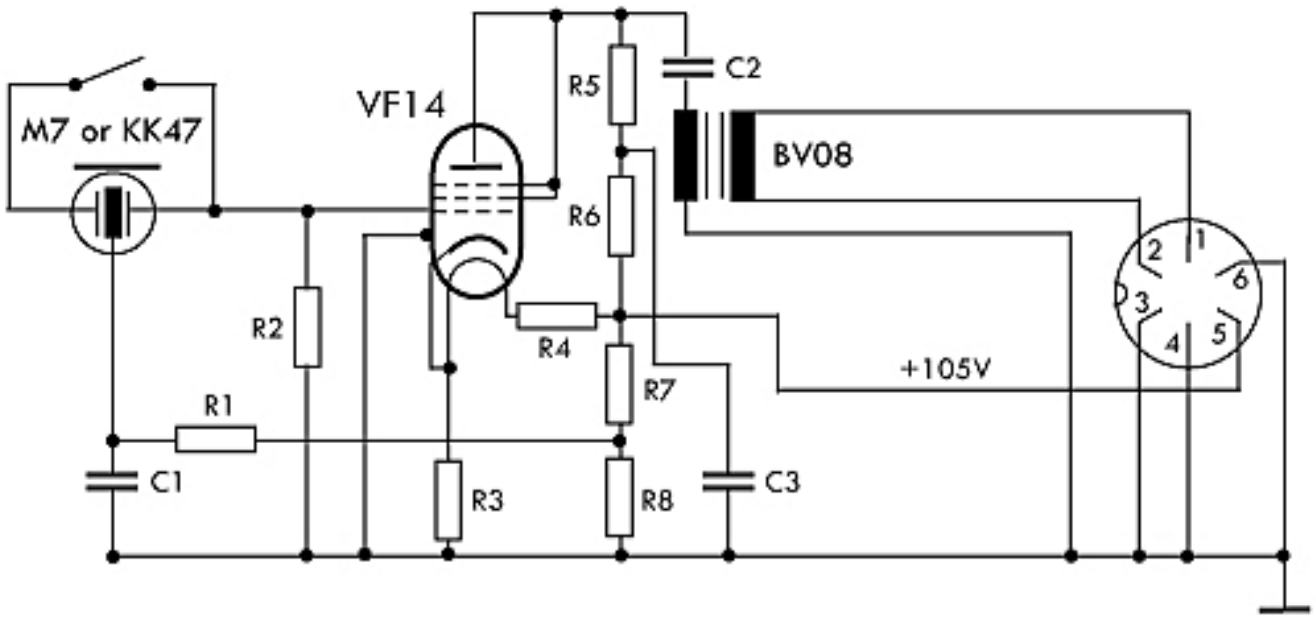


| Component List | Notes |
|---|---|
| R1 100M Ω, .1W<br>R2 60M Ω, .1W<br>R3 29 Ω, .5W<br>R4 1780 Ω, .5W<br>R5 100K Ω, .5W<br>R6 30K Ω, .5W<br>R7 2M Ω, .5W<br>R8 3M Ω, .5W<br>C1 .01 µF, 400V<br>C2 .5 µF, 250V<br>C3 1 µF, 160V | There are numerous revisions of the U47 schematic. This page is based on one such revision. It is easy to find photocopies of an original layout on the web. The goal of this layout is to make it easier to compare to other mic circuits. |


## Copyright Information

Page layout © copyright 2000-2011 AMI, Inc.. All Rights Reserved. Please do not publish, reproduce or distribute this schematic without this copyright information attached. AMI reserves the right to fix mistakes or make any updates to this layout at its discretion.



AMI, Inc.
506 2nd Street
Gaylord, KS 67638
USA

**www.tab-funkenwerk.com**