VOICE EDIT (I)

In this section we assume you already know something about FM synthesis. If not, turn to p.24 and read "What's FM?" before continuing.

VOICE EDIT (I) is where you edit the parameters that determine how a voice sounds; ie. the FM synthesis parameters. When you press VOICE EDIT (I) you will get the following display. Press the PARAMETER SELECT keys 1-8 to select the parameters displayed in the lower line.

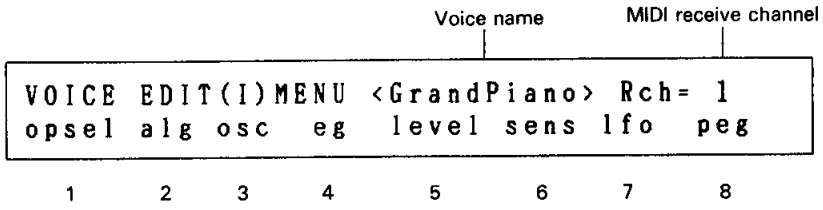

The Voice Edit Buffer

When you select a Performance Memory, voice data for each instrument in the performance is loaded into a place called the Voice Edit Buffer, and this data tells the TX802 how to produce sound. There is a separate Voice Edit Buffer for each instrument 1-8. Changes you make in VOICE EDIT mode affect only these buffers, and are not permanent unit Stored into an Internal or Cartridge Voice Memory. (See Store p.7). Once a voice has been edited, the LCD in PERFORMANCE SELECT or VOICE SELECT mode will show the voice bank in lower-case letters (e.g. i64 or a45), indicating that the voice data has been modified.

Compare

Any time you are editing a voice, you can press COMPARE to see and hear the original voice data. In COMPARE mode, the lower line of the LCD will blink, and you will not be able to modify the data. Lock through the parameters just as in normal edit mode. To return to edit mode, press COMPARE again.

1. Operator Select & On/Off

Most of the parameters 2-6 in VOICE EDIT (I) can be set independently for each operator. Step through the operators by pressing PARAMETER SELECT 1. When editing, it is often useful to hear only a certain combination of operators at once. By pressing ENTER + ten-key 1-6, you can turn each operator on or off. The "111111" at the left indicates which operators are on (1) or off (0). If an operator is turned off you will not be able to edit it. Obviously, if all carriers are turned off, there will be no sound.

2. Algorithm

These are parameters that affect the entire voice.

Algorithm (1-32)
: The Algorithm, or "arrangement" of operators. The pull-out reference card under the LCD has a diagram of the 32 algorithms.

Feedback Level (0-7)
: One operator in each algorithm (see the pull-out reference card) can be set to modulate itself on a scale of 0 (no feedback) to 7.

Oscillator Key Sync (on/off)
: Turning this on forces the sine waves of all 6 operators to begin from phase 0 when a key is played.

Transpose (C1 – C5)
: The voice can be transposed +/−2 octaves from the normal setting of C3. By playing a note while pressing ENTER, you can quickly set the Transpose point.

Voice Name (10 characters)
: As described in Performance Name (p.17), use the ten-key pad to enter a voice name.

3. Oscillator

The frequency of each operator can be set here. You have the option of two types of display; alternate by pressing PARAMETER SELECT 3. One display shows all frequency settings for a single operator. The other shows coarse and fine for all 6 operators. (Select operators using PARAMETER SELECT 1.)

Mode (ratio/fixed)
: In Ratio mode, the frequency of the operator will depend on the key that is played. In Fixed mode, the frequency is displayed in "Hz", and remains the same regardless of the key that is played.

Coarse/Fine Frequency
: Move in large steps when the cursor is at "Coarse"; move in small steps when the cursor is at "Fine".

Detune (−7 – +7)
: An "extra fine" frequency adjustment over a range of approximately +/−2 cents.

4. Envelope Generator

Envelope Generator and Rate Scaling for each operator. You have the option of two types of display; alternate by pressing PARAMETER SELECT 4. One display shows all EG parameters numerically for a single operator. The other is a graphic display of Levels for all 6 operators. (Select operators using PARAMETER SELECT 1.)

The envelopes of several operators will often have similar envelopes. You can save time by using the Copy EG & Scaling utility (p.13).

Rate Scaling (0-7)
: When Rate Scaling is 0, the envelope will be the same speed for any note on the keyboard. As Rate Scaling is increased, higher notes will have faster envelopes.

Rate 1-4 (0-99)

Level 1-4 (0-99)
: Levels and Rates 1-4 determine the "shape" of the envelope. See the pull-out reference card.

5. Output Level

Operator Output Level and Level Scaling parameters for each operator. You have the option of two types of display; alternate by pressing PARAMETER SELECT 5. One display shows parameters numerically. The other is a full graphic display of levels in groups of 3 keys from A#-1 to C7, corresponding approximately to an 88-key keyboard.

Select Normal or Fractional scaling by moving the cursor to "Mode" in the full graphic display (use ENTER + CURSOR) and using +1/−1. Several operators will often have similar scaling settings. You can save time by using the Copy EG & Scaling utility (p.13).

Normal scaling allows you to adjust operator output level over the keyboard using the following parameters. The pull-out reference card shows how the parameters are related.

Level (0-99)	Operator Output Level
Ld (0-99)	Left Scaling Depth
Lc (+/−, lin/exp)	Left Scaling Curve (linear or exponential)
Bp (A-1-C8)	Break Point
Rc (+/−, lin/exp)	Right Scaling Curve (linear or exponential)
Rd (0-99)	Right Scaling Depth

Fractional scaling allows you to adjust operator output level over a range of 0-255 for each individual group of three keys. You can specify an Offset (Ofst) value over a range of −127 to +127 to shift the overall level setting up or down. The numerical display will also have a partial graphic display as shown below, and the currently selected key group will blink. Move the cursor to select the key group. Or you can jump to any key group by playing a note on a MIDI keyboard while pressing ENTER.

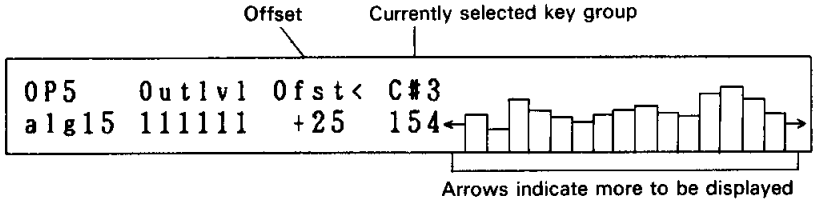

If a voice is created using Fractional Scaling, a cartridge containing Fractional Scaling must be inserted when the voice is used. If not, the "f" in PERFORMANCE SELECT and VOICE SELECT modes will blink.

6. Sensitivity

Velocity and Amplitude Modulation Sensitivity for each operator, and Pitch Modulation Sensitivity (common to all operators). The diagram on p.21 shows how LFO modulation is sent to the operators.

Velocity (0-7) Key Velocity Sensitivity
This sets the effect that Key Velocity will have on operator output level. When set to zero, Key Velocity will have no effect.

Ams (0-7) Amplitude Modulation Sensitivity
This sets the sensitivity of the operator to amplitude modulation coming from the LFO and from EG Bias. At zero the operator will be unaffected.

Pms (0-7) Pitch Modulation Sensitivity
This sets the sensitivity of the entire voice to pitch modulation coming from the LFO. At zero, the voice will have no pitch modulation.

7. LFO

Low Frequency Oscillator parameters (common to all operators). The diagram below shows how LFO modulation is sent; either "automatically" (AMD and PMD) or regulated by a controller (see p.23). As you can see from the diagram, if the Sensitivity settings are 0, the LFO will have no effect.

Wave (triangle, saw down, saw up, square, sine, s/hold)
Five periodic wave-shapes and "random" sample-and-hold.

Speed (0-99)
Adjusts the LFO frequency.

Delay (0-99)
A time delay can be set before the LFO begins.

Mode (single, multi)
In Single mode, the LFO begins when the first key is hit and continues with the same phase for all subsequent notes. (I.e. the LFO effect is "synchronized" for all notes.)
In Multi mode, an independent LFO begins when each note is played. Thus, each note can be at a different phase.

Pmd (0-99) Pitch Modulation Depth

Amd (0-99) Amplitude Modulation Depth
Pitch Modulation Depth and Amplitude Modulation Depth determine the amount of LFO signal sent directly to the voice; i.e. "automatic" as opposed to an effect regulated by a Controller, etc. (p.23).

Sync (off, on) LFO Key Sync
When Sync is on, each note restarts the LFO from phase 0.

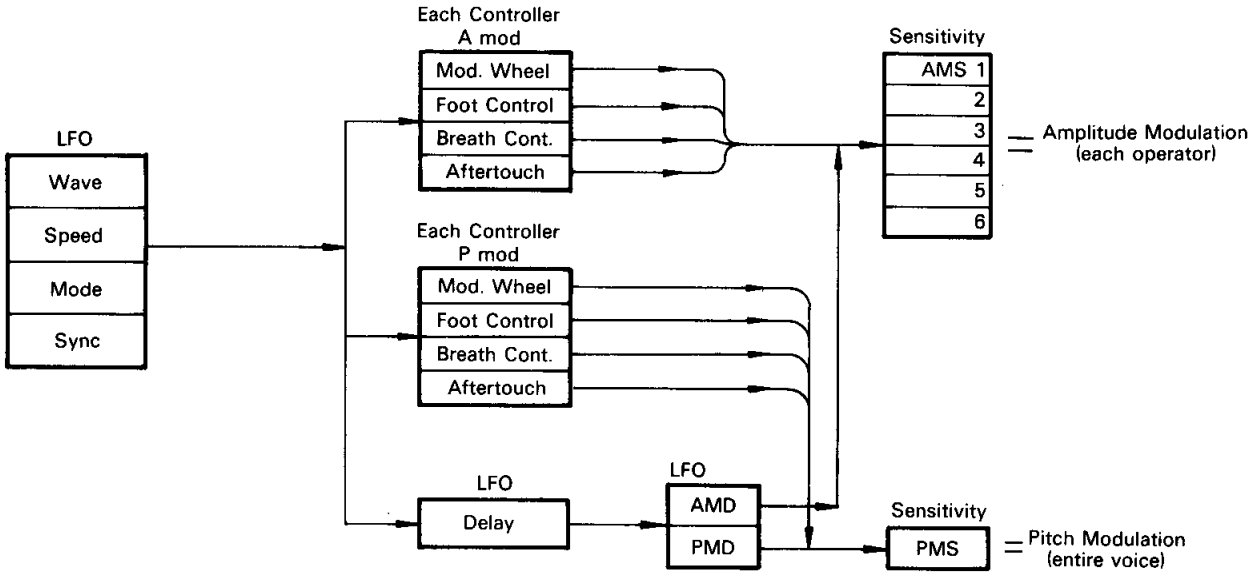

8. Pitch EG

Pitch Envelope Generator rates R1-4 and levels L1-4 determine how the pitch changes with time. Level 50 is the normal pitch. The difference in pitch between levels of 0 and 99 can be set from 1/2 to 8 octaves. When Pitch EG Velocity Sensitivity is switched on, the intensity of the Pitch EG effect will depend on the key touch. When Rate Scaling is 0, the envelope will be the same speed for any note on the keyboard. As Rate Scaling is increased, higher notes will have faster envelopes.

Rng (1/2, 1, 2, 8 octaves)	Range
Vel (off, on)	Pitch EG Velocity Sensitivity
Rs (0-7)	Rate Scaling
R1-4 (0-99)	Rate 1-4
L1-4 (0-99)	Level 1-4

VOICE EDIT (II)

This is where you determine how a voice will be controlled via MIDI. When you press VOICE EDIT (II) you will get the following display. Press the PARAMETER SELECT keys 1-8 to select the parameters displayed in the lower line.

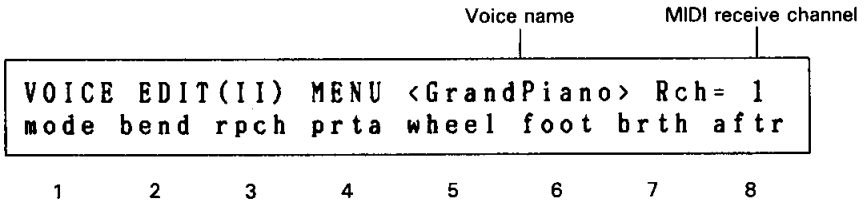

Compare

Any time you are editing a voice, you can press COMPARE to see and hear the original voice data. In COMPARE mode, all parameters in the LCD will blink, and you will not be able to modify the data. Look through the parameters just as in normal edit mode. To return to edit mode, press COMPARE again.

1. Key mode

(poly, mono)
Poly is the normal mode, when a voice will be played with as many simultaneous notes as the performance setting allows (see Linked Tone Generators, p.7).

In Mono mode, only the last note you play will be sounded. Mono mode allows you to use Fingered Portamento (see p.23). When an instrument is Alternately Assigned (p.15), Mono is ignored.

2. Pitch bend

Range (0-12)
Set to 0, the Pitch Bend Wheel will have no effect; set to 12, the maximum bend will be an octave.
Step (0-12)
Set to 0, the pitch bend will be continuous. Set 1-12, the bending effect will be in "steps" of 1-12 semitones. When Step is set to 1-12, Range will automatically be set to 12.

3. Random pitch

Depth (0-7)
When set between 1 and 7, the pitch will be given an increasing randomness, useful for creating a "naturally irregular" feel.

4. Portamento

There are two modes of Portamento (the "glide" between notes), and your choice will differ between Poly and Mono modes (see above). Portamento can be switched on/off via MIDI.

Portamento Mode
When in Poly mode:
Sus. Key Retain: Notes held with the sustain pedal are retained as the pitch glides to the new note.
Sus. Key Follow: Notes held with the sustain pedal glide to the new note.

When in Mono mode:

Fingered: Portamento will occur only when a key is pressed while another key is always present.

Fulltime: Portamento always occurs.

Step (0-12)

The "glide" between notes can be smooth (Step=0) or in steps of up to one octave (Step=12).

Time (0-99)

The time it takes for the pitch to change. Portamento Time of 0 is the same as no effect. 99 gives the slowest portamento.

5. *Mod. wheel*

6. *Foot control*

Pmod (0-99)
Amod (0-99)
EG bias (0-99)
Volume (0-99)

You can specify what incoming Modulation Wheel and Foot Control messages will ob. They can regulate the amount of Amplitude Modulation or Pitch Modulation coming from the LFO (see the diagram on p.21). Or they can directly control the output level of operators, i.e. "biasing" the envelope generator. (The operator must be programmed with some Amplitude Modulation Sensitivity, see p.20). Raising each value gives more control. The Foot Controller (not the Modulation wheel) can also regulate volume.

7. *Breath control*

8. *After touch*

Pmod (0-99)
Amod (0-99)
EG bias (0-99)
P bias (−50 − +50)

In addition to the three parameters explained above, you can make the Breath Controller or Aftertouch directly affect the pitch by using. Pitch Bias. Positive settings will make the pitch go up and negative settings will make the pitch go down. (Use the "−" key to enter a negative number.)

WHAT'S FM?

A complete discussion of FM synthesis is beyond the scope of this manual. Here we will cover only the basic ideas of FM. For a more detailed study, refer to one of the many guidebooks on the Yamaha DX series and FM synthesis that have been published.

FREQUENCY MODULATION

FM stands for Frequency Modulation. In FM, one waveform modulates another waveform, creating a new, complex waveform, as shown below. So to do FM synthesis, we need two oscillators. The upper one is called the "Modulator" and the lower one (which goes directly to the output of the synthesizer) is called the "Carrier". The complexity or "brightness" of the resulting waveform will depend of the output level of the Modulator.

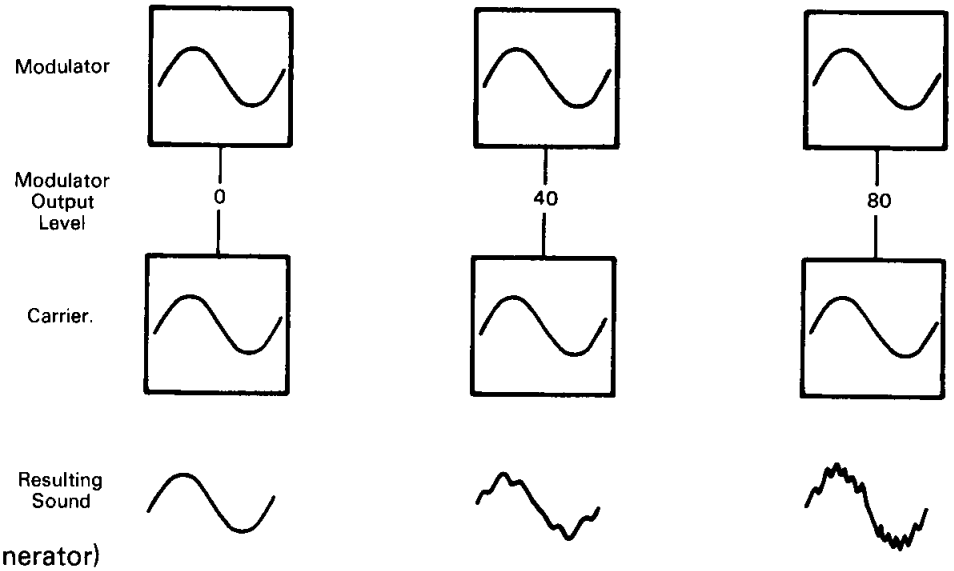

EG (Envelope Generator)

By varying the output level of the modulator, we can produce all kinds of sounds. However, sounds in the real world usually change as time goes by. This "shape in time" is called the Envelope. If the output level of the modulator changes, the tone will change. If the output level of the carrier changes, the volume will change.

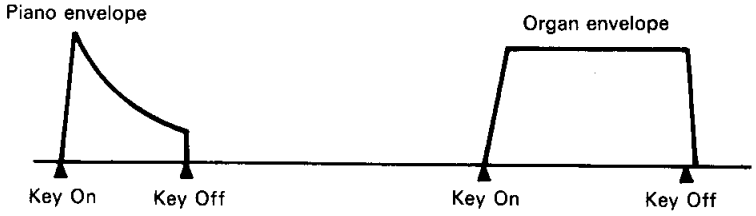

OPERATOR

In Yamaha FM synthesizers, each oscillator has its own Envelope Generator (EG) to vary its output level over time. This "package" is called an Operator. An operator can be either a modulator or carrier. The only difference is how it is used.

ALGORITHM

To do simple FM, you need only two operators, but the TX802 has six, and these six operators can be arranged in 32 different ways. Each arrangement is called an Algorithm. The 32 algorithms are shown on the pull-out operation guide under the LCD display. Algorithm 3 has two carriers, each with two modulators "stacked" on top of it. In algorithm 22, three carriers are modulated by a single modulator, and another carrier has its own modulator. Algorithm 32 has six carriers and no modulators.

FEEDBACK

In the algorithm chart, you will also notice that one of the operators has its output "looped". This means that it can modulate itself; a bit like having an additional operator.

RATIO FREQUENCY

The basic frequency of each operator can be set independently. When an operator is in Ratio mode, it will produce a frequency corresponding to the key that is pressed. It the frequency ratio of the carrier:modulator is 1:1, the resulting sound will contain all the harmonic partials. For example, if the fundamental (the "basic pitch") is 100hz, harmonics of 200hz, 300hz, 400hz ... will be generated. If the frequency ratio is 1:2, the odd-numbered harmonic partials will be generated (100hz, 300hz, 500hz will generate non-harmonic spectra typical of clashing, metallic sounds.

FIXED FREQUENCY
An operator can also be set to Fixed mode, which will cause it to produce the same frequency regardless of what key is pressed. In Fixed mode, the frequency is displayed in Hz (cycles per second) or KHz (1000 cycles per second). If carrier is in Ratio mode and the modulator is in Fixed mode, the harmonic structure of the sound will change depending on the key you press.

LFO
The LFO (Low Frequency Oscillator) produces a slow (i.e. below an audible frequency) vibration that can be used to create vibrato, tremolo or other effects. If the LFO is affecting the output level of a carrier, the result will be Tremolo (periodic change in volume), and if it is affecting the output level of a modulator, the result will be periodic change in tone ("Wah-Wah"). The LFO can also control the pitch of the operators, producing Vibrato (periodic change in pitch).

SENSITIVITY
Acoustic instruments produce different sounds when played softly or loudly. Not only the loudness, but also the tone changes. A softly played note is usually softer in tone as well as volume. FM synthesis provides an easy way to simulate this. Each operator can be "Velocity Sensitive", and adjust its output level according to how hard a key is struck (key velocity). If a carrier is velocity sensitive, the volume will depend on the key velocity. If a modulator is velocity sensitive, the tone will depend on the key velocity.

DETUNE
The harmonic structure of actual acoustic sounds is usually somewhat "irregular". This makes them sound interesting and lifelike. By slightly Detuning each operator, you can create this type of naturally irregular sound.

SCALING
The tonal characteristics of an instrument generally change from note to note. For example, high notes on a piano have a simpler harmonic structure than the bass notes. By Scaling the output level of a modulator to decrease as you play up the keyboard, you can simulate this.

LEARNING FM SYNTHESIS
Creating a voice from the initial setting is not a simple matter. The best way to learn about FM synthesis is to get inside the factory preset voices and see how they work. Turn each operator off one by one, and see how each operator affects the sound. Make small changes in operator output level or EG rates. Try starting from a preset voice that is fairly close to what you have in mind, and edit it to your liking.