TSB-165A

Unidirectional Back Electret Condenser Microphone

TRANSOUND®



Specifications

Sensitivity: 1kHz,0dB=1V/Pa	-45+/-4dB Vs=1.5V RL=2.2kΩ
Impedance:	Less than 2.2 kohm
Directivity:	Unidirectional
Standard Operating Voltage:	1.5V
Current Draw:	Max. 0.5mA
Sensitivity Reduction:	120dB SPL
Signal to Noise Ratio:	Greater than 66dB

Qty	Price
1-9	$7.50
10-99	$5.75
100-999	$4.60

Input **Quantity** to order - 1

ADD TO CART VIEW CART

Frequency Response

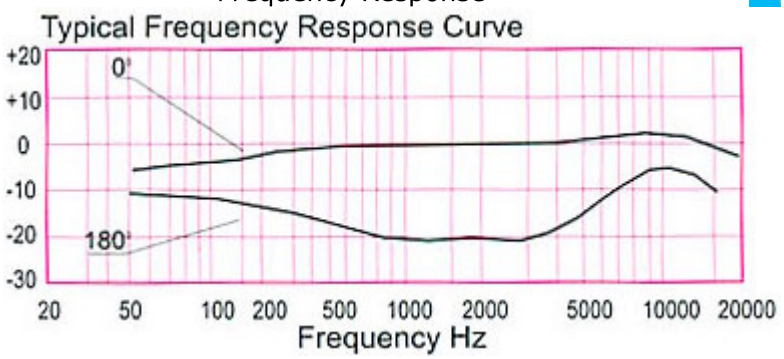

Schematic

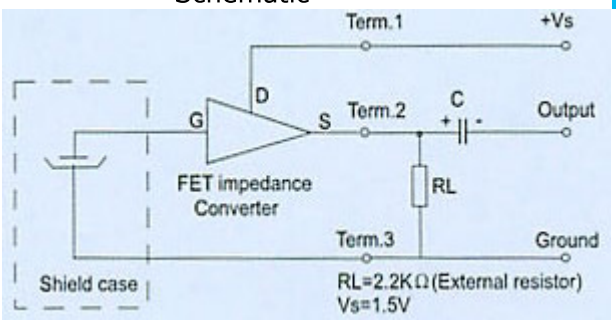

Dimensions

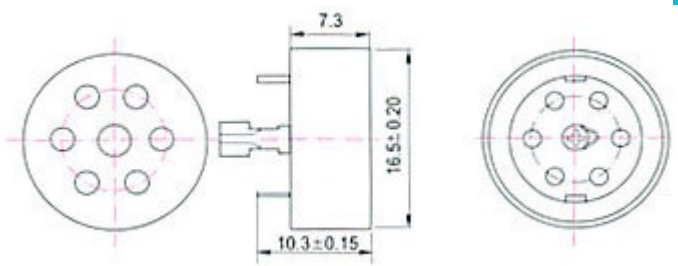

Inquire Here