TRACE ELLIOT

SERVICE MANUAL NO. SM00024

ISSUE 1

Date:	October 28, 1996
Product Code :	T3450 / T3465
Model No :	Brat Reverb & Non-Reverb
Technical File No :	TE00024

Issued by:

Trace Elliot Limited.
Blackwater Trading Estate
The Causeway, Maldon
Essex CM4 4GG.

ISSUE 2	ISSUE	ISSUE
CHANGE NOTE	CHANGE NOTE	CHANGE NOTE
DATE 9/10/1996	DATE	DATE
ISSUE 3	ISSUE	ISSUE
CHANGE NOTE	CHANGE NOTE	CHANGE NOTE
DATE 14/10/1997	DATE	DATE

ISSUE 2 TR8 REPLACED BC549C WITH J112
C21 POLARITY REVERSED

ISSUE 3: C35 ADDED

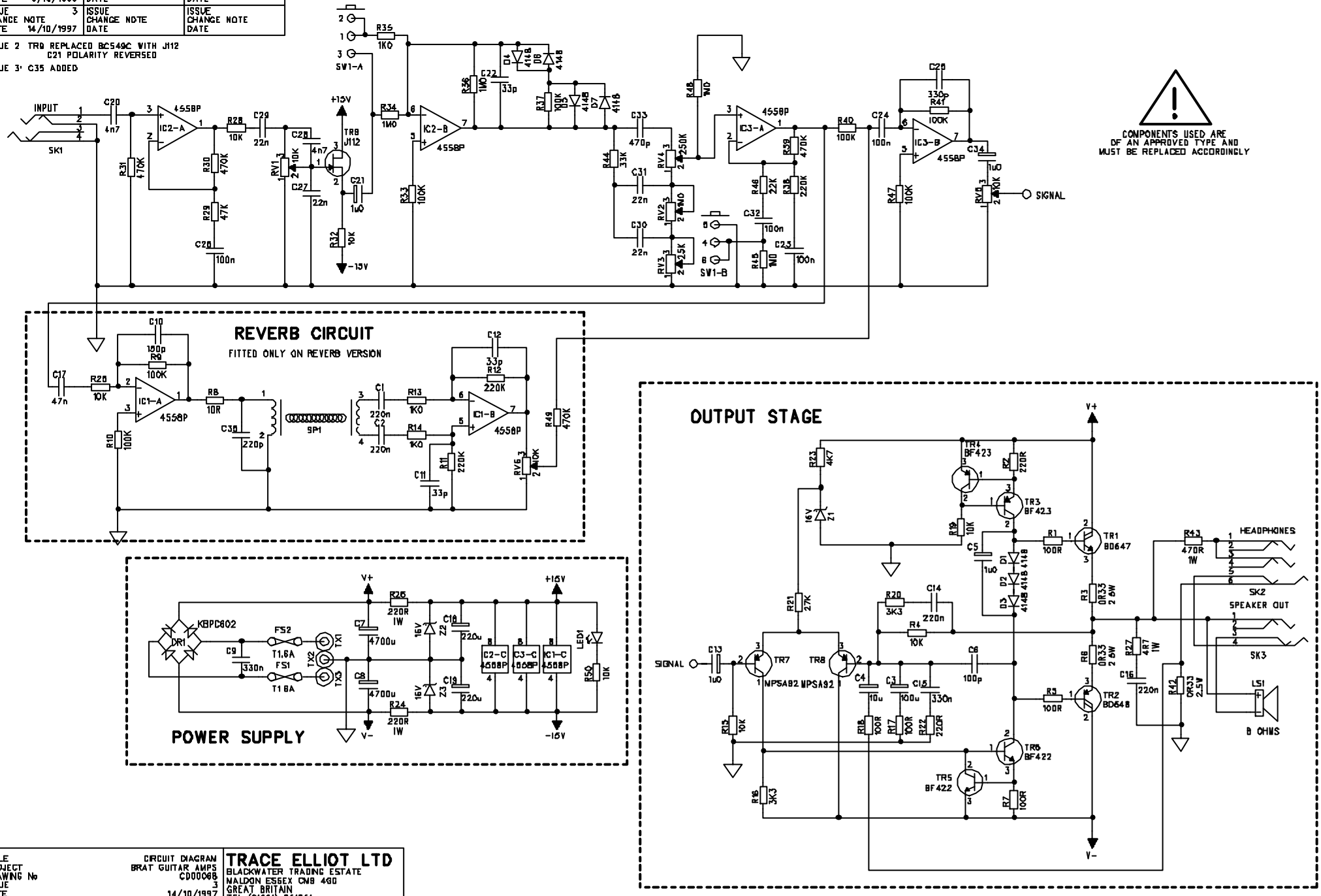

TITLE	CIRCUIT DIAGRAM
PROJECT	BRAT GUITAR AMPS
DRAWING No	CD000068
ISSUE	3
DATE	14/10/1997
DRAWN BY	PAUL STEVENS & J B RECKLESS

TRACE ELLIOT LTD
BLACKWATER TRADING ESTATE
MALDON ESSEX CM9 4GG
GREAT BRITAIN
TEL (01621) 851851
FAX (01621) 851970

C32-PCB-PC00069x1.

PARTS LIST FOR BRAT 15R PC00069x4

ISSUE 1 LIST ANDY EWEN 12/8/98.

Qty	Part Code	Value	Reference
Zero ohm links			
41	72-RCZERO		as indicated on PCB
Axial capacitors			
4	72-C100N-100VCA	100n	C23-24 C26 C32
1	72-C100P-100VCA	100p	C6
1	72-C150P-100VCA	150p	C10
4	72-C220N-50VCA	220n	C1-2 C14 C16
1	72-C220P-100VCA	220p	C35
4	72-C22N-100VCA	22n	C27 C29-31
2	72-C330N-50VCA	330n	C15 C9
1	72-C330P-100VCA	330p	C25
3	72-C33P-100VCA	33p	C11-12 C22
1	72-C470P-100VCA	470p	C33
1	72-C47N-100VCA	47n	C17
2	72-C4N7-100VCA	4n7	C20 C28
Axial diodes			
7	72-D-1N4148	4148	D1-7
3	72-D-BZX55C16V	16V	Z1-3
Axial resistors			
7	72-RM100K	100K	R9-10 R33 R37 R40-41 R47
5	72-RM100R	100R	R1 R5 R7 R17-18
7	72-RM10K	10K	R15 R4 R19 R25 R28 R32 R50
1	72-RM10R	10R	R8
3	72-RM1K	1K0	R35 R14 R13
4	72-RM1M	1M0	R34 R36 R45 R48
3	72-RM220K	220K	R12 R11 R38
2	72-RM220R	220R	R2 R22
2	72-RM220R-1WATT	220R	R24 R26
1	72-RM22K	22K	R46
1	72-RM27K	27K	R21
1	72-RM33K	33K	R44
2	72-RM3K3	3K3	R16 R20
4	72-RM470K	470K	R30-31 R39 R49
1	72-RM470R-1WATT	470R	R43
1	72-RM47K	47K	R29
1	72-RM4K7	4K7	R23
1	72-RM4R7-1WATT	4R7	R27

3	72-RWW0R33-2.5W	0R33	R3 R6 R42
Non axial components			
1	72-C100-16VER	100u	C3
1	72-C10-63VER	10u	C4
4	72-C1-35VT	1u0	C5 C13 C21 C34 **NB: C21 HAS POLARITY REVERSED ON ISSUE 1 PCBs ONLY**
2	72-C220-25VER	220u	C18-19
3	72-IC-RC4558P	4558P	IC1-3
1	72-FET-J-112P	J112 PINK	TR9 **NB: SWAP PINS 1 AND 2 ON ISSUE 1 PCBs ONLY**
2	72-TBF422	BF422	TR5-6
2	72-TBF423	BF423	TR3-4
2	72-TMPSA92	MPSA92	TR7-8
1	72-BRIDGE-2	KBPC602	DR1
2	72-CAP-470035V	4700u	C7-8
2	72-CRIMP-PCB-TAB		LS1
3	72-CRIMP-PCB-TAB		TX1-3
1	72-CRIMP-PCB-TAB		GND1
2	72-FUS-1.6AT-2	T1.6A	FS1-2
2	72-FUS-HLD-PCB-2	T1.6A	FS1-2
2	72-HEAD-2W		SP1
1	72-LED-RED		LED1
3	73-POT-A10K	10K	RV1 RV5-6
1	73-POT-A1M	1M0	RV2
1	73-POT-A250K	250K	RV4
1	73-POT-A25K	25K	RV3
1	73-SKT-JCKBBBS	stereo silver	SK2
2	73-SKT-JCKBNBS	mono silver	SK1 SK3
1	73-SWT-F2UEE	F2UEE	SW1
1	71-KNOB-PUSH-ON3	IVORY CAP	SW1
1	72-TBD647	BD647	TR1
1	72-TBD648	BD648	TR2
2	72-MOS-PAD-TO220		TR1 TR2
1	F13-HS-BRAT		
2	71-SCR-M3X12PPB		TR1 TR2
2	71-WAS-M3NYL		TR1 TR2
2	71-WAS-M3ABLK		TR1 TR2
2	71-NUT-M3ZINC		TR1 TR2
1	73-PCB-PC00069		ISSUE 4