TASCAM

TEAC Professional Division

TM-D8000

Digital Mixing Console

SERVICE MANUAL

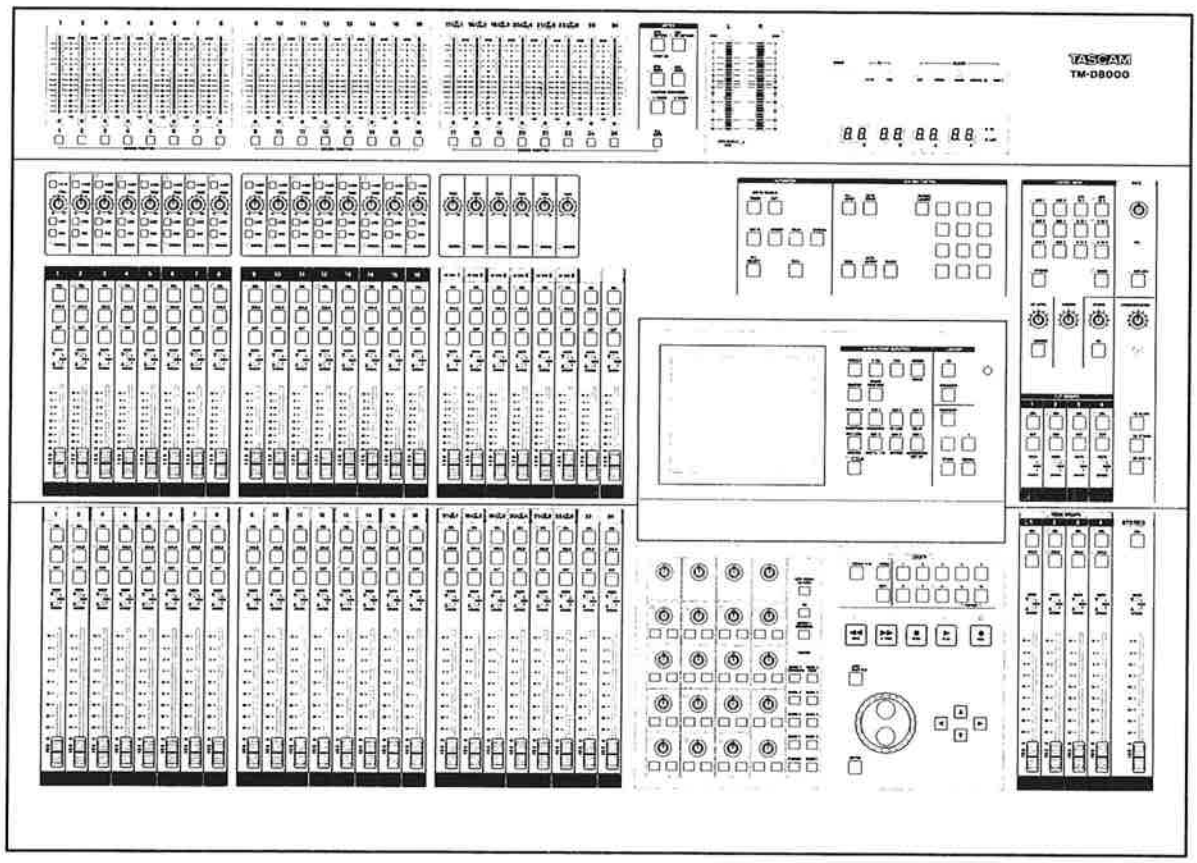

Effective : June, 1998 4A2669

D00433800A

CONTENTS

1. SPECIFICATIONS 3
2. DOWNLOADING & BACKING-UP THE SRAM DATA 7
3. REMOVING THE ROM 8
4. PC BOARD LOCATION 9
5. PC BOARD WIRING 10
6. BLOCK DIAGRAMS 12
7. DISASSEMBLY PROCEDURE 17
8. SELF DIAGNOSTIC FUNCTION 21
9. TROUBLESHOOTING 28
10. ERROR MESSAGE LIST AND SOLUTIONS 36
11. CHANGING THE OUTPUT LEVEL 38
12. LIFE TIME OF CONSUMPTION PARTS 40
13. CIRCUIT DESCRIPTION 41
14. EXPLODED VIEWS AND PARTS LIST 74
15. PC BOARDS AND PARTS LIST 86
16. SCHEMATIC DIAGRAMS 114

目次

1. 仕様 3
2. SRAMデータのバックアップとダウンロード 7
3. ROMの取外し 8
4. 基板配置図 9
5. 基板結線図 10
6. ブロックダイアグラム 12
7. 分解手順 17
8. 自己診断機能 21
9. トラブルシューティング 28
10. エラーメッセージと対策 36
11. 出力レベルの変更 38
12. 消耗部品の寿命一覧 40
13. 回路説明 41
14. 分解図とパーツリスト 74
15. 基板図とパーツリスト 86
16. 回路図 114

INSTRUCTIONS FOR SERVICE PERSONNEL

BEFORE RETURNING APPLIANCE TO THE CUSTOMER, MAKE LEAKAGE-CURRENT OR RESISTANCE MEASUREMENTS TO DETERMINE THAT EXPOSED PARTS ARE ACCEPTABLY INSULATED FROM THE SUPPLY CIRCUIT.

1. SPECIFICATIONS

仕様

Analog audio

Mic inputs (channels 1 through 16)
- XLR-3-31 type, balanced (1 = ground, 2 = hot, 3 = cold)
- Input impedance: 2.4kΩ
- Gain: +61dB to +13dB (pad off)
- Nominal input level: -50dBu (-57dBu to -9dBu : pad off)
- Headroom: +16dB

Line inputs (channels 1 through 16)
- 1/4" phone, balanced (tip = hot, ring = cold, sleeve = ground)
- Input impedance: 2.4kΩ
- Gain: +41dB to -7dB (pad on)
- Nominal input level: +4dBu (-37dBu to +11dBu : pad on)
- Headroom: +16dB

Insert sends and returns (channels 1 through 16)
- 1/4" phone, unbalanced (sleeve = ground)
- Send (tip)
- Output impedance: 100Ω
- Nominal output level: +4dBu
- Maximum output level: +20dBu
- Return (ring)
- Input impedance: 10kΩ
- Nominal input level: +4dBu
- Headroom: +16dB

Aux sends 1 through 6
- 1/4" phone, unbalanced
- Output impedance: 100Ω
- Nominal output level: +4dBu
- Maximum output level: +20dBu

Stereo returns 1 through 6
- 1/4" phone, unbalanced (tip = signal, sleeve = ground)
- Input impedance: 10kΩ
- Nominal input level: +4dBu (-22dBu to +11dBu)
- Gain: +26dB to -7dB
- Headroom: +16dB

Matrix inserts 1 through 4
- 1/4" phone, unbalanced (sleeve = ground)
- Send (tip)
- Output impedance: 100Ω
- Nominal output level: +4dBu
- Maximum output level: +20dBu
- Return (ring)
- Input impedance: 10kΩ
- Nominal input level: +4dBu
- Headroom: +16dB

Stereo outputs
- XLR-3-32 type, balanced (1 = ground, 2 = hot, 3 = cold)
- Output impedance: 75Ω
- Nominal output level: +4dBu
- Maximum output level: +20dBu/+24dBu
- Headroom: +16dB/+20dB
- RCA, unbalanced
- Output impedance: 100Ω
- Nominal output level: -10dBV
- Maximum output level: +6dBV/+10dBV
- Headroom: +16dB/+20dB

アナログ・オーディオ

MIC INPUTS（1～16）
- XLR-3-31タイプ、バランス（1:GND、2:HOT、3:COLD）
- 入力インピーダンス ：2.4kΩ
- ゲイン ：+61dB～+13dB（PAD OFF時）
- 規定入力レベル ：-50dBu（-57dBu～-9dBu：PAD OFF時）
- ヘッドルーム ：+16dB

LINE INPUTS（1～16）
- ステレオ・ホン・ジャック、バランス（Tip : HOT、Ring : COLD、Sleeve : GND）
- 入力インピーダンス ：2.4kΩ
- ゲイン ：+41dB～-7dB（PAD ON時）
- 規定入力レベル ：+4dBu（-37dBu～+11dBu：PAD ON時）
- ヘッドルーム ：+16dB

INSERTS（1～16）
- ステレオ・ホン・ジャック、アンバランス（Tip : SEND、Ring : RTN、Sleeve : GND）
- SEND（Tip）
- 出力インピーダンス ：100Ω
- 規定出力レベル ：+4dBu
- 最大出力レベル ：+20dBu
- RETURN（Ring）
- 入力インピーダンス ：10kΩ
- 規定入力レベル ：+4dBu
- ヘッドルーム ：+16dB

AUX SENDS（1～6）
- ホン・ジャック、アンバランス
- 出力インピーダンス ：100Ω
- 規定出力レベル ：+4dBu
- 最大出レベル ：+20dBu

STEREO RETURNS（1～6）
- ホン・ジャック、アンバランス
- 入力インピーダンス ：10kΩ
- 規定入力レベル ：+4dBu（-22dBu～+11dBu）
- ゲイン ：+26dB～-7dB
- ヘッドルーム ：+16dB

MX INSERTS（1～4）
- ステレオ・ホン・ジャック、アンバランス（Tip : SEND、Ring : RTN、Sleeve : GND）
- SEND（Tip）
- 出力インピーダンス ：100Ω
- 規定出力レベル ：+4dBu
- 最大出力レベル ：+20dBu
- RETURN（Ring）
- 入力インピーダンス ：10kΩ
- 規定出力レベル ：+4dBu
- ヘッドルーム ：+16dB

STEREO OUTPUTS
- XLR-3-32タイプ、バランス（1:GND、2:HOT、3:COLD）
- 出力インピーダンス ：75Ω
- 規定出力レベル ：+4dBu
- 最大出力レベル ：+20dBu/+24dBu
- ヘッドルーム ：+16dB/+20dB
- RCAピン、アンバランス
- 出力インピーダンス ：100Ω
- 規定出力レベル ：-10dBV
- 最大出力レベル ：+6dBV/+10dBV
- ヘッドルーム ：+16dB/+20dB

2TR IN 1
XLR-3-31 type, balanced (1 = ground, 2 = hot, 3 = cold)
Input impedance: 20kΩ
Nominal input level: +4dBu
Gain: 0dB
Headroom: +20dB
2TR IN 2
RCA unbalanced
Input impedance: 20kΩ
Nominal input level: -10dBV
Headroom: +20dB
Scope outputs
1/4" phone stereo unbalanced (tip = left, ring = right, sleeve = ground)
Output impedance: within 1kΩ
Nominal output level: -2dBu
Maximum output level: +14dBu/+18dBu
Headroom: +16dB/+20dB
CR output
XLR-3-32 type, balanced (1 = ground, 2 = hot, 3 = cold)
Output impedance: 75Ω
Nominal output level: +4dBu
Maximum output level: +20dBu/+24dBu
Headroom: +16dB/+20dB
Studio output
XLR-3-32 type, balanced (1 = ground, 2 = hot, 3 = cold)
Output impedance: 75Ω
Nominal output level: +4dBu
Maximum output level: +20dBu/+24dBu
Headroom: +16dB/+20dB
Phones outputs
1/4" phone, stereo (tip = left, ring = right, sleeve = ground)
Nominal impedance: 30Ω
Maximum output level: 100mW + 100mW

Digital audio

MTR 1-8, MTR 9-16, MTR 17-24
Connector: 25-pin D-sub (female)
Data is in TDIF-1 format
D I/O 1, D I/O 2
Connector: 25-pin D-sub (female)
Data is in TDIF-1 format
D IN 1 through D IN 4
Connector: XLR-3-31 type
Data is in AES3-1992 format
D IN 1, D IN 2
Connector: RCA
Data is in IEC958 Consumer (SPDIF) format
AUX SEND 3-4
Connector: XLR-3-31 type
Data is in AES3-1992 format
STEREO RETURN 6
Connector: RCA
Data is in IEC958 Consumer (SPDIF) format
Stereo outputs
Connector: XLR-3-31 type
Data is in AES3-1992 format
Connector: RCA
Data is in IEC958 Consumer (SPDIF) format

2TR IN 1
XLR-3-31タイプ、バランス（1:GND、2:HOT、3:COLD）
入力インピーダンス ：20kΩ
規定入力レベル ：+4dBu
ゲイン ：0dB
ヘッドルーム ：+20dB
2TR IN 2
RCAピン、アンバランス
入力インピーダンス ：20kΩ
規定入力レベル ：-10dBV
ヘッドルーム ：+20dB
SCOPE OUTPUTS
ステレオ・ホン・ジャック、アンバランス
（Tip : Left、Ring : Right、Sleeve : GND）
出力インピーダンス ：1kΩ
規定出力レベル ：-2dBu
最大出力レベル ：+14dBu/+18dB
ヘッドルーム ：+16dB/+20dB
CR OUTPUT
XLR-3-32タイプ、バランス（1:GND、2:HOT、3:COLD）
出力インピーダンス ：75Ω
規定出力レベル ：+4dBu
最大出力レベル ：+20dBu/+24dBu
ヘッドルーム ：+16dB/+20dB
STUDIO OUTPUT
XLR-3-32タイプ、バランス（1:GND、2:HOT、3:COLD）
出力インピーダンス ：75Ω
規定出力レベル ：+4dBu
最大出力レベル ：+20dBu/+24dBu
ヘッドルーム ：+16dB/+20dB
PHONES
ステレオ・ホン・ジャック
公称インピーダンス ：30Ω
最大出力レベル ：100mW + 100mW

デジタル・オーディオ

MTR 1-8、MTR-9-16、MTR 17-24
コネクター ：D-sub25ピン（メス）
フォーマット ：TDIF-1
D I/O 1、D I/O 2
コネクター ：D-sub25ピン（メス）
フォーマット ：TDIF-1
D IN 1 - D IN 4
コネクター ：XLR3-31タイプ
フォーマット ：AES/EBU
D IN 1、D IN 2
コネクター ：RCAピン
フォーマット ：SPDIF
AUX 3-4 SEND
コネクター ：XLR-3-32タイプ
フォーマット ：AES/EBU
STEREO RETURN 6
コネクター ：RCAピン
フォーマット ：SPDIF
STEREO OUTPUTS
コネクター ：XLR-3-31タイプ
フォーマット ：AES/EBU
コネクター ：RCAピン
フォーマット ：SPDIF

Control connections

RS-422
9-pin D-sub (female), RS-422 protocol
Remote output
15-pin D-sub male
DTRS REMOTE IN/SYNC IN format (ver. 1)
TO HOST
8-pin mini-DIN, RS-422 protocol
GPI outputs 1-2 and 3-4
1/4" phone (TRS)
Sleeve = ground, Tip = (GPI1 EV1, GPI2 EV3), Ring = (GPI1 EV2, GPI2 EV4)
MIDI IN, OUT, THRU
5-pin DIN
In accordance with MIDI standards

Synchronization connections

Timecode in
XLR-3-32 type, balanced (1 = ground, 2 = hot, 3 = cold)
Input impedance: 20kΩ
Input level: more than -36dBu
RCA, unbalanced
Input impedance: 20kΩ
Input level: more than -30dBV
Communication remote input
Sync in
BNC connector, unbalanced
Input impedance 75Ω (switchable)
Word level: TTL
Video level: 0.5Vp-p to 2.0Vp-p
Frame level: TTL
Sync out
BNC connector, unbalanced
Output impedance: 75Ω
Output level: TTL
Sync thru
BNC connector, unbalanced

Analog I/O specifications

Mic/line inputs
Equivalent input noise: -126dBu, typically -127dBm with DIN audio weighting at 150Ω, gain at 60dB
Frequency response: +0.5dB/-1.0dB 20Hz to 20kHz, gain at +50dB
Total harmonic distortion: less than 0.01% 20Hz to 20kHz with gain at +60dB, input at -42dBu
Common mode rejection ratio: more than 70dB 20Hz to 20kHz with gain at +60dB
Insert matrix returns
Equivalent input noise: -67dBu with DIN audio weighting at 1kΩ
Stereo returns
Equivalent input noise: -97dBu with DIN audio weighting at 1kΩ
Frequency response: +0.5dB/-1.0dB 20Hz to 20kHz
Total harmonic distortion: less than 0.1%, 20Hz to 20kHz, gain at +26dB, input -7dBu
All measurements made at signal levels of +18dBu

制御信号接続端子

RS-422 ：D-sub 9ピン（メス）、RS-422準拠
REMOTE OUTPUT ：D-sub15ピン（オス）
DTRS REMOTE/SYNC IN（ver. 1）
TO HOST ：ミニDIN 8ピン、RS-422準拠
GPI OUTPUTS 1-2/3-4 ：ステレオ・ホン・ジャック
Tip ：GPI 1、GPI 3
Ring ：GPI 2、GPI 4
Sleeve ：GND
MIDI IN/OUT/THRU ：DIN 5ピン、MIDI規格準拠

同期信号接続端子

TIME CODE IN
XLR-3-32タイプ、バランス（1：GND、2：HOT、3：COLD）
入力インピーダンス ：20kΩ以上
入力レベル ：-36dBu以上
RCAピン、アンバランス
入力インピーダンス ：20kΩ以上
入力レベル ：-30dBV以上
COMMUNICATION REMOTE
シンク入力
BNCコネクター、アンバランス
入力インピーダンス ：75Ω ON/OFF切替
ワード・レベル ：TTL
ビデオ・レベル ：0.5Vp-p～2.0Vp-p
フレーム・レベル ：TTL
シンク出力
BNCコネクター、アンバランス
出力インピーダンス ：75Ω
出力レベル ：TTL
シンク・スルー
BNCコネクター、アンバランス

アナログ入/出力仕様

MIC LINE 入力
等価入力雑音 ：-126dBu以下
（ゲイン:+61dB、150Ω、DIN）
-101dBu以下
（ゲイン:+13dB、150Ω、DIN）
周波数特性 ：20Hz - 20kHz +0.5dB/-1.0dB以内
全高調波ひずみ ：0.02%以下、20Hz - 20kHz
（ゲイン:+60dB、入力:-42dBu）
0.04%以下、20Hz - 20kHz
（ゲイン:+13dB、入力:-6dBu）
同相除去比 ：70dB以上、20Hz - 20kHz
（ゲイン:+61dB）

MX INSERT/INSERT
等価入力雑音 ：-67dBu以下（150Ω、DIN）
周波数特性 ：20Hz - 20kHz +0.5dB/-0.1dB以内
全高調波ひずみ ：0.02%以下、20Hz - 20kHz
（入力+18dBu）

STEREO RETURN
等価入力雑音 ：-97dBu以下
（ゲイン:+26dB、1kΩ、DIN）
：-66dBu以下
（ゲイン:-7dB、1kΩ、DIN）
周波数特性 ：20Hz - 20kHz +0.5dB/-1.0dB以内
全高調波ひずみ ：0.1%以下、20Hz - 20kHz
（ゲイン:+26dB、入力:-7dBu）

Stereo outputs (XLR)
Noise level: -79dBu with DIN audio weighting, all channels, stereo return and MTR cut
Frequency response: +0.5dB/-1.0dB 20Hz to 20kHz
Total harmonic distortion: less than 0.01%, 20Hz to 20kHz, output = +18dBu
Aux sends
Noise level : -79dBu with DIN audio weighting, all channels, stereo return and MTR cut
Frequency response: +0.5dB/-1.0dB 20Hz to 20kHz
Total harmonic distortion: less than 0.01%, 20Hz to 20kHz, output = +18dBu
2-track 1
Equivalent input noise: -100dBu, DIN audio weighting, at 150Ω
Frequency response: +0.5dB/-1.0dB, 20Hz to 20kHz
Common mode rejection ratio: better than 40dB, 20Hz to 20kHz at +18dB
2-track 2
Equivalent input noise: -100dBV, DIN audio weighting, at 150Ω
Frequency response: +0.5dB/-1.0dB, 20Hz to 20kHz
C-R and studio outputs
Noise level : -95dBu (CR), -98dBu (studio) with DIN audio weighting, CR and studio levels respectively to minimum
Frequency response: +0.5dB/-1.0dB 20Hz to 20kHz
Total harmonic distortion: less than 0.01%, 20Hz to 20kHz, output = +18dBu
Phones output
THD: Within 1% 20Hz to 20kHz at 10mW + 10mW

System specifications

Noise level (DIN audio)
-66dBu, 1 Mic to STEREO OUT, at maximum
-53dBu: 16 Mic to STEREO OUT, at maximum
-80dBu: 24 MTRs to STEREO OUT
Total harmonic distortion
Less than 0.1% at nominal level
Frequency response
20Hz to 20kHz +0.5dB/-1dB
Crosstalk
90dB (at 1kHz)
67dB (10kHz CR OUT)
Signal processing time
Less than 1.25ms (MIC/LINE to XLR stereo out, Fs=48kHz)
Click
Less than 35dB
Fader attenuation
90dB at 1kHz
Muting level
90dB at 1kHz
Internal sampling frequency
Stable to within ±50PPM
External sampling frequency
Can lock to ±6% of stated nominal frequency

Physical specifications

Power requirements
US: 120VAC/60Hz
Europe (EU) 230VAC/50Hz
Europe (non-EU) 230VAC/60Hz
Australia: 240VAC/50Hz
Power consumption
125W
Dimensions (w x h x d) mm (in)
1020 x 315 x 717 (40.2 x 12.4 x 28.2)
Weight kg (lb)
40 (88)

STEREO OUTPUT（XLR）
ノイズレベル ：-79dBu以下
（Channel/STRTN/MTR all CUT、DIN）
周波数特性 ：20Hz - 20kHz +0.5dB/-1.0dB以内
全高調波ひずみ ：0.01%以下、20Hz - 20kHz
（出力:+18dBu）
AUX SEND 1-4
ノイズレベル ：-79dBu以下
（Channel/STRTN/MTR all CUT、DIN）
周波数特性 ：20Hz - 20kHz +0.5dB/-1.0dB以内
全高調波ひずみ ：0.01%以下、20Hz - 20kHz
（出力:+18dBu）
2TR 1
等価入力雑音 ：-100dBu以下（150Ω、DIN）
周波数特性 ：20Hz - 20kHz +0.5dB/-1.0dB以内
全高調波ひずみ ：0.01%以下、20Hz - 20kHz
（CR OUTPUT出力:+18dBu）
同相除去比 ：40dB以上、 20Hz - 20kHz
2TR 2
等価入力雑音 ：-100dBV以下（150Ω、DIN）
周波数特性 ：20Hz - 20kHz +0.5dB/-1.0dB以内
全高調波ひずみ ：0.01%以下、20Hz - 20kHz
（CR OUTPUT出力:+18dBu）
CR OUTPUT/STUDIO OUTPUT
ノイズレベル ：-90dBu以下
（CR/STUDIO Level:minimum、DIN）
周波数特性 ：20Hz - 20kHz +0.5dB/-1.0dB以内
全高調波ひずみ ：0.01%以下、20Hz - 20kHz
（出力:+18dBu）
PHONES
全高調波ひずみ ：1%以内、20Hz - 20kHz
（出力:10mW＋10mW）

システム仕様

ノイズレベル（DINオーディオ）
-66dBu ：1 MIC to STEREO、トリム最大
-53dBu ：16 MICs to STEREO OUT、
トリム最大
-80dBu ：24 MTRs to STEREO OUT
全高調波ひずみ ：0.1%以下（規定レベル）
周波数特性 ：20Hz - 20kHz +0.5dB/-1.0dB以内
クロストーク ：90dB以上（1kHz）
：80dB以上（10kHz）
STEREO OUT、STUDIO OUT
：67dB以上（10kHz）CR OUTPUT
信号処理時間 ：1.25msec.以下
（MIC/LINE ～ XLR STEREO OUT、Fs : 48kHz）
クリック ：35dB以下
フェーダー・アッテネーション ：90dB以上（1kHz）
ミュート・レベル ：90dB以上（1kHz）
内部サンプリング周波数 ：安定度±50PPM以内
外部サンプリング周波数 ：公称周波数の±6%以内

その他

電源 ：100V AC、50/60Hz
消費電力 ：125W
寸法(幅×高さ×奥行き) ：1020mm x 315mm x 717mm
質量 ：40kg

2. DOWNLOADING & BACKING-UP THE SRAM DATA

SRAMデータのバックアップとダウンロード

This procedure should be required when SRAM clear, replacement of MAIN CPU PCB and replacement of SRAM backup battery.

SRAM included:
- Snapshot library
- EQ library
- Dynamics library
- Routing library
- Current parameters

Important note: Please complete whole procedure for downloading or backing up at a time unless otherwise the system data might be destroyed.

この作業は、SRAMクリア時、MAIN CPU PCBの交換時、SRAMのバックアップ・バッテリーの交換時に必要です。
尚、SRAMには
- ・SNAP SHOT ライブラリー
- ・EQ ライブラリー
- ・DYNAMICS ライブラリー
- ・ROUTING ライブラリー
- ・その他、現在の設定内容

のデータが保存されています。

注意）ダウンロードまたはバックアップの作業は途中で止めないでください。システムデータが破壊される可能性があります。

1. Required Equipment

- TM-D8000
- A MIDI cable
- A program on your computer that allows you to play MIDI files, together with a MIDI interface.
  or
- A dedicated MIDI sequencer or "data filer" with a floppy disk drive.

1. 使用機器

- TM-D8000
- MIDIケーブル
- MIDIファイルを再生することができるコンピューターのプログラム（MIDIインターフェース要）
  または、フロッピーディスクドライブ付きのMIDIシーケンサー（またはDATA FILER）

2. Connection example

- SRAM data backing up

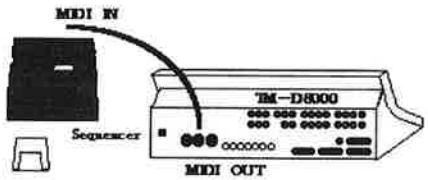

or

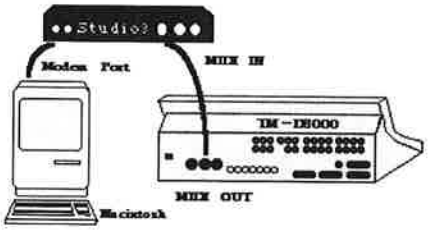

- SRAM data downloading

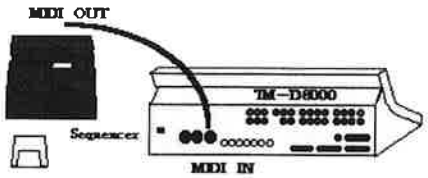

or

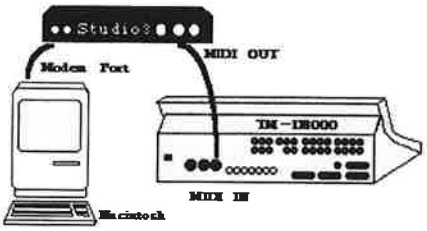

2. 接続例

- SRAMデータ・バックアップ
- SRAMデータ・ダウンロード

3. Backing up the SRAM data

1) Turn on the power of TM-D8000.
2) Press [Shift] + [MTR SEND] + [REC Function 19] at the same time while the "TASCAM" logo is scrolling on the LCD screen. Then the console goes into "DIAGNOSTICS MODE".

3. SRAMデータのバックアップ方法

1) TM-D8000の電源をONにします。
2) LCDスクリーンに“TASCAM”の文字がスクロールしている間に、SHIFTキー、MTR SENDキー、REC FUNCTION 19キーを同時に押して、“DIAGNOSTICS MODE”にします。

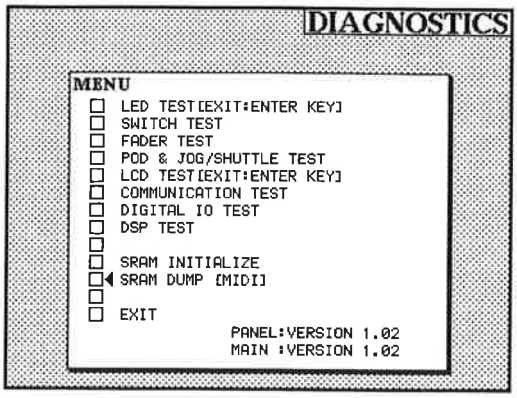

3) Set the MIDI Sequencer into Recording mode.
4) Move the cursor in the LCD to "SRAM DUMP" then press [ENTER].
5) For backing-up, it takes about 3 minutes and if the backing-up is completed, and select the [EXIT] to quit the "DIAGNOSTIC MODE".

4. Downloading the SRAM data

1) Turn on the power of TM-D8000.
2) Load the MIDI file of SRAM data by MIDI Sequencer then start Play.
3) TM-D8000 enters Download mode and the data downloading starts automatically.
4) TM-D8000 starts updating & confirming automatically after the downloading.
5) TM-D8000 will restart automatically if all the procedures has been completed properly.

3) MIDIシーケンサーを録音モードにします。
4) LCDスクリーンで、カーソルを“SRAM DUMP”に移動させてENTERキーを押します。
5) バックアップに約3分かかります。バックアップが終わったら、カーソルを“EXIT”に移動させENTERキーを押して“DIAGNOSTICS MODE”を終了します。

4. SRAMデータのダウンロード

1) TM-D8000の電源をONにします。
2) MIDIシーケンサーでSRAMデータのMIDIファイルをロードし再生します。
3) TM-D8000は自動的にダウンロード・モードに入り、そのデータのダウンロードを初めます。
4) TM-D8000はダウンロードの後、自動的にアップデートと確認を初めます。
5) 全ての手順が適切に行われた場合は、TM-D8000は自動的に再起動します。

3. REMOVING THE ROM

ROMの取外し

Detach the socket cover to remove the ROM (PANEL CPU PCB :U3, MAIN CPU PCB :U10, U11).
To remove the socket cover, slide it as shown below.

ROM（PANEL CPU PCB :U3およびMAIN CPU PCB :U10, U11）は、図のようにソケット・カバーをスライドさせて取り外すことにより外すことができます。

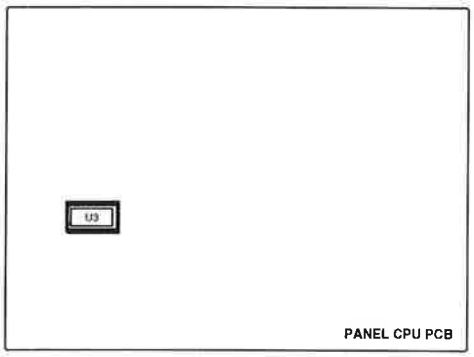

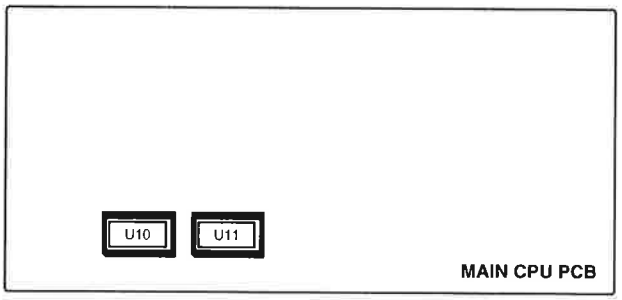

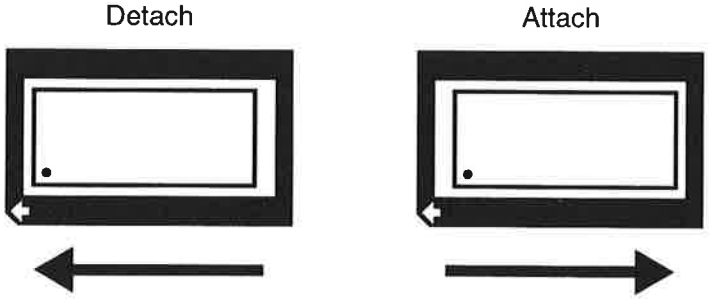

4. PC BOARD LOCATION

基板配置図

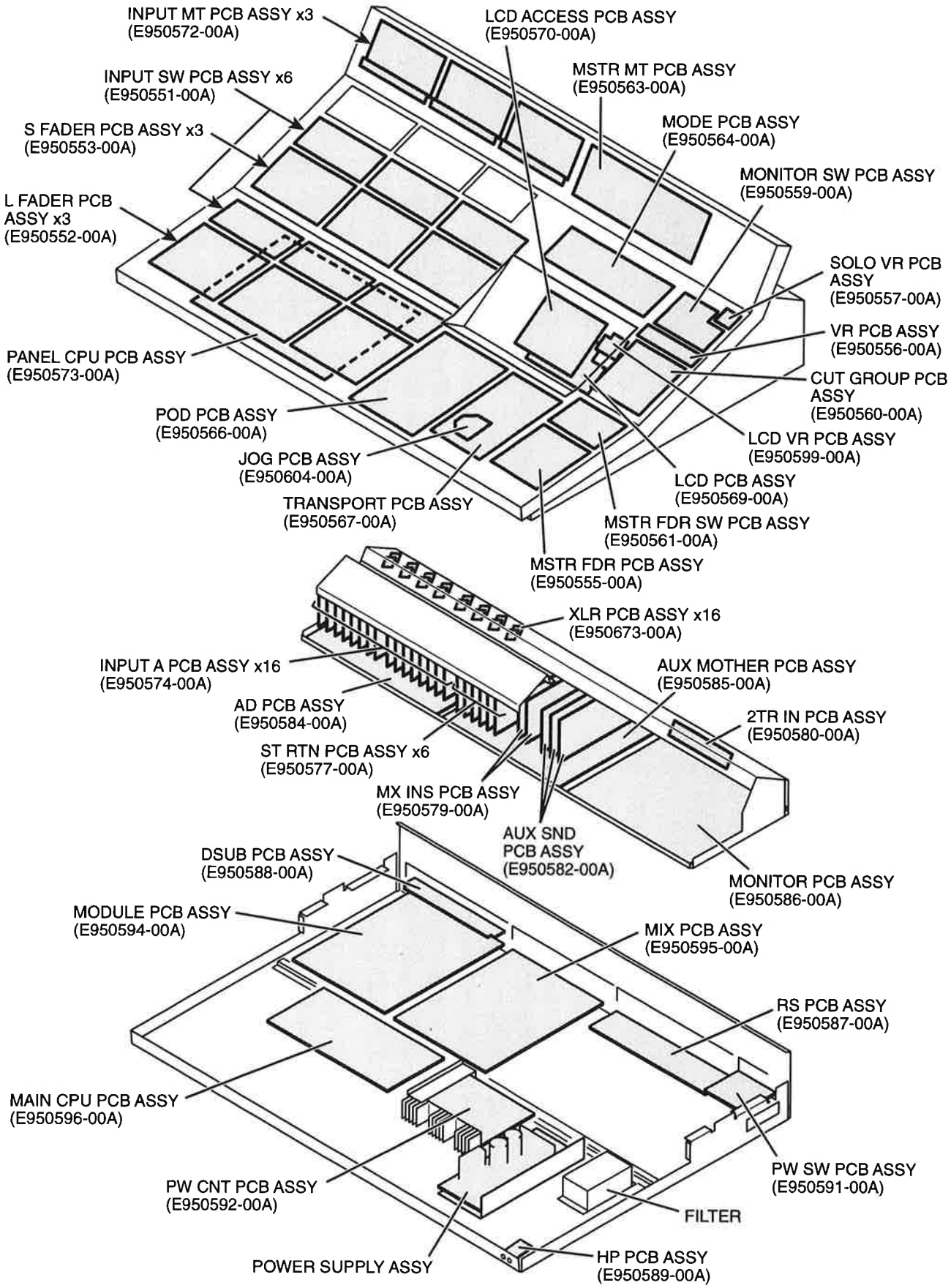

5. PC BOARD WIRING

基板結線図

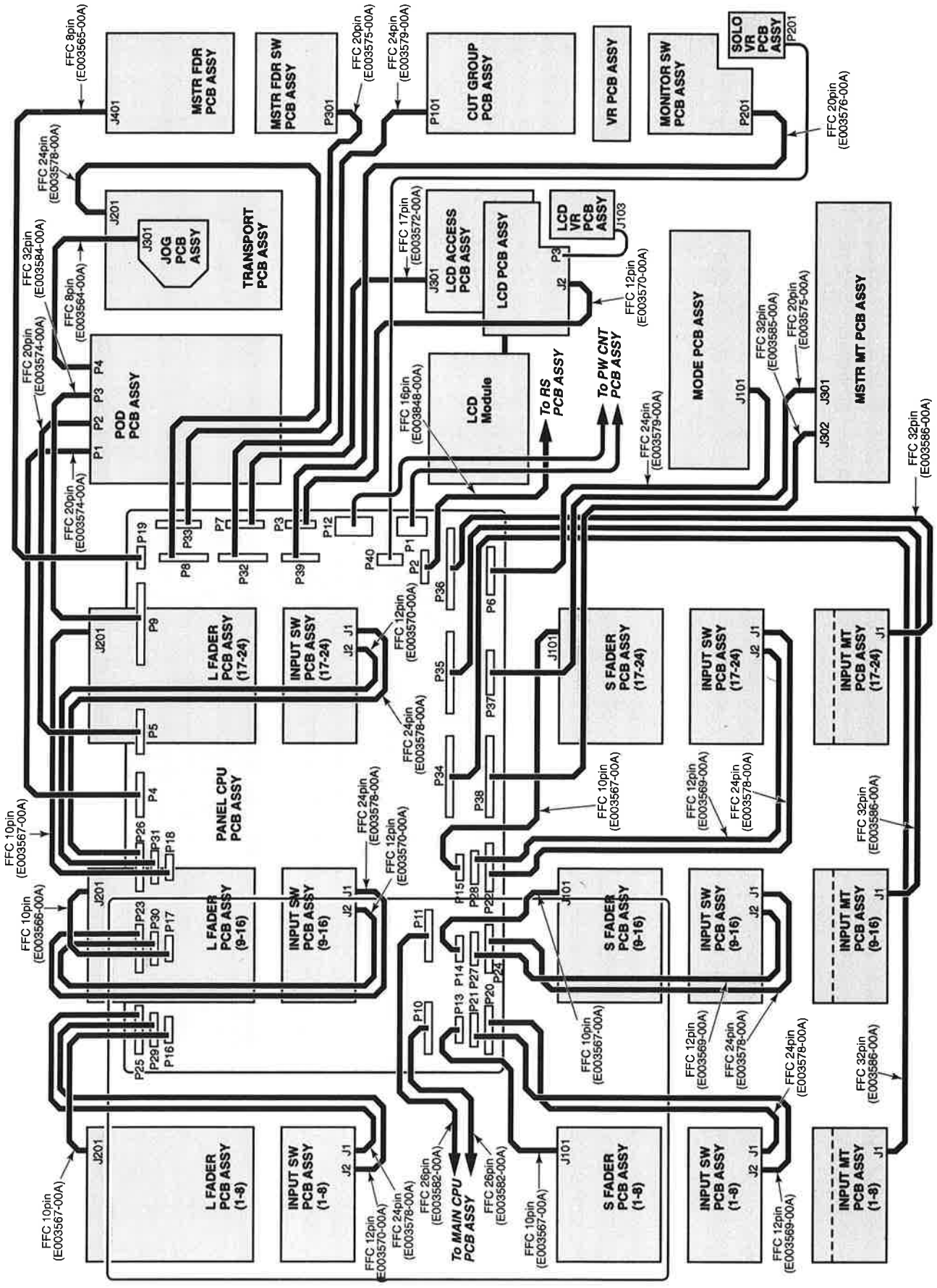

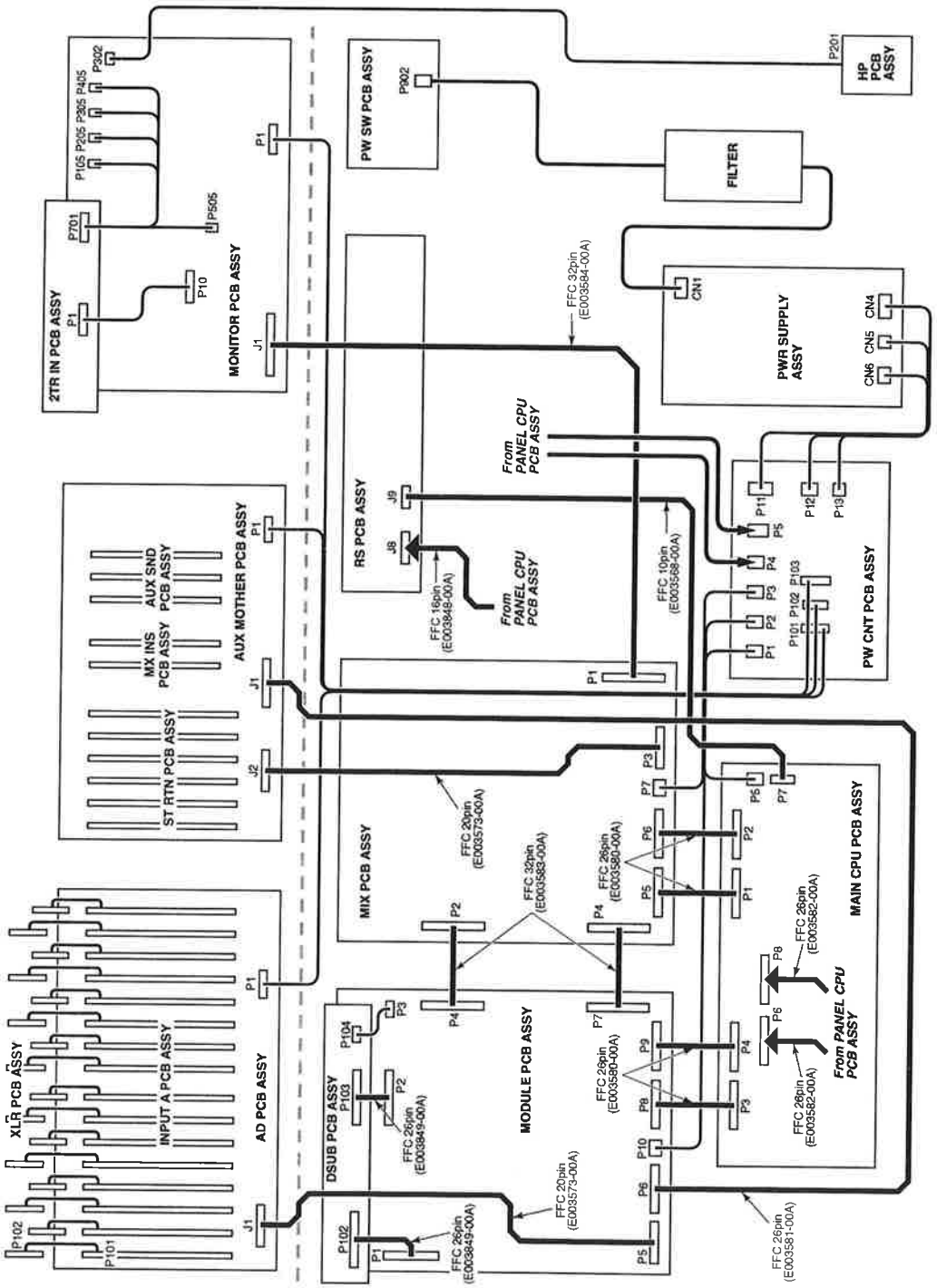

FFC LIST

Parts No.	Description
E00356400A	FLAT CABLE,1.25-8G-300
E00356500A	FLAT CABLE,1.25-8G-750
E00356600A	FLAT CABLE,1.25-10G-300
E00356700A	FLAT CABLE,1.25-10G-500
E00356800A	FLAT CABLE,1.25-10G-750
E00356900A	FLAT CABLE,1.25-12G-500
E00357000A	FLAT CABLE,1.25-12G-750
E00357200A	FLAT CABLE,1.25-17G-650
E00357300A	FLAT CABLE,1.25-20G-300
E00357400A	FLAT CABLE,1.25-20G-500
E00357500A	FLAT CABLE,1.25-20G-850
E00357600A	FLAT CABLE,1.25-20G-1100
E00357800A	FLAT CABLE,1.25-24G-600
E00357900A	FLAT CABLE,1.25-24G-750
E00358000A	FLAT CABLE,1.25-26G-65
E00358100A	FLAT CABLE,1.25-26G-600
E00358200A	FLAT CABLE,1.25-26G-850
E00358300A	FLAT CABLE,1.25-32G-100
E00358400A	FLAT CABLE,1.25-32G-500
E00358500A	FLAT CABLE,1.25-32G-750
E00358600A	FLAT CABLE,1.25-32G-1500
E00384800A	FLAT CABLE,1.25-16G-800
E00384900A	FLAT CABLE,1.25-26G-100

6. BLOCK DIAGRAMS

ブロックダイアグラム

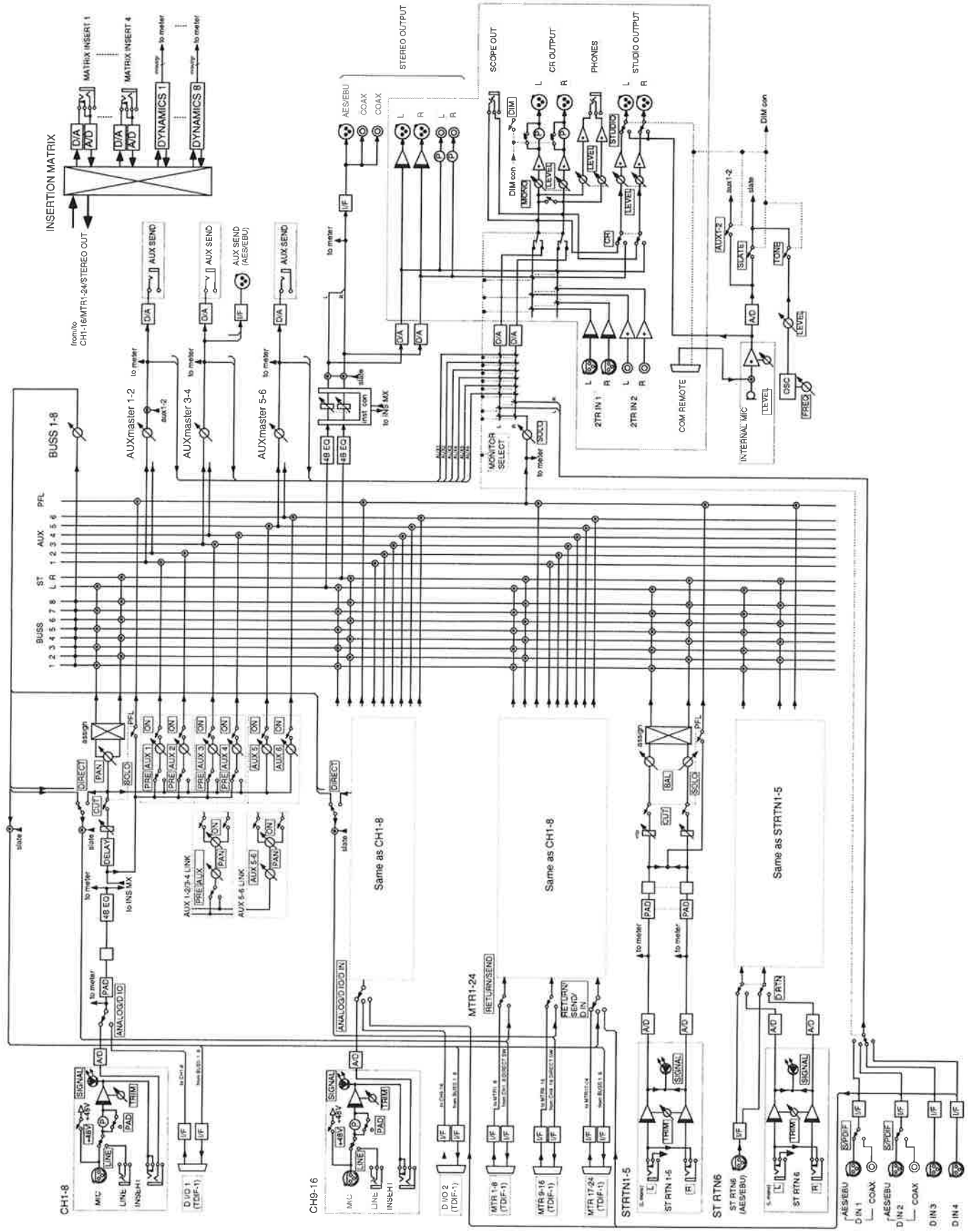

ANALOG SECITION (1)

MIC/LINE INPUT SECTION BLOCK DIAGRAM

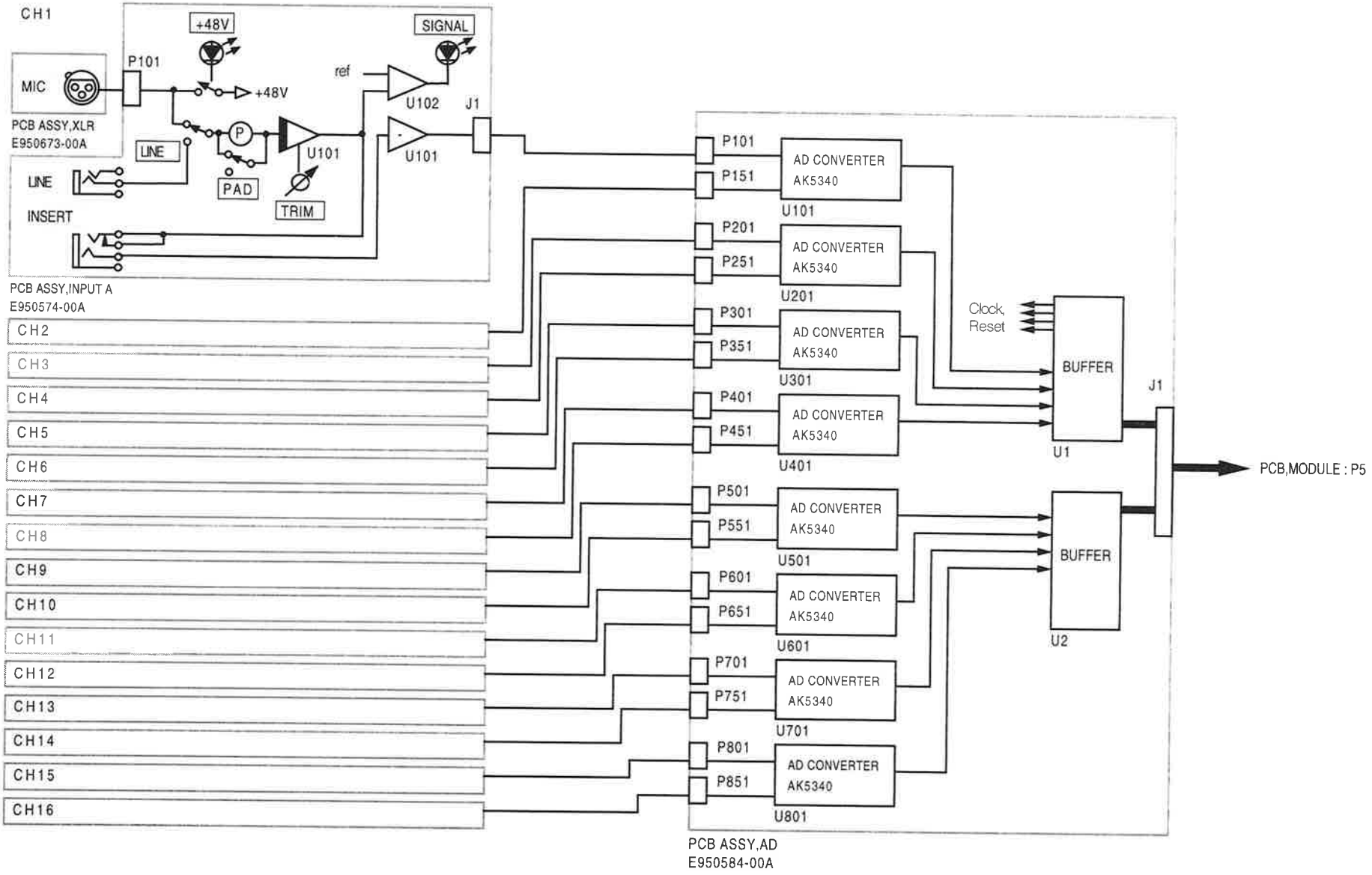

ANALOG SECITION (2)

STEREO RTN/AUX SND SECTION BLOCK DIAGRAM

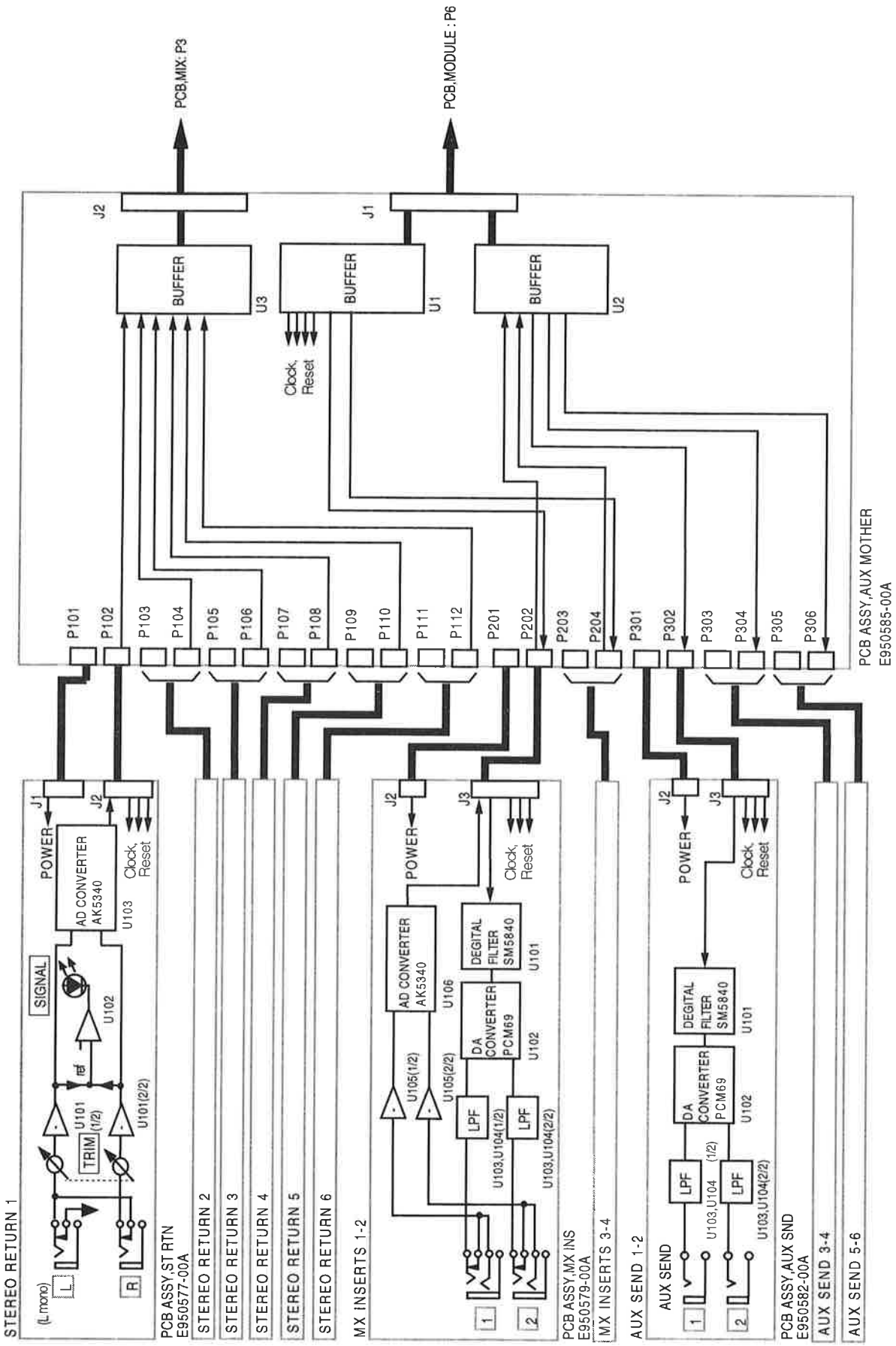

ANALOG SECITION (3)

MONITOR SECTION BLOCK DIAGRAM

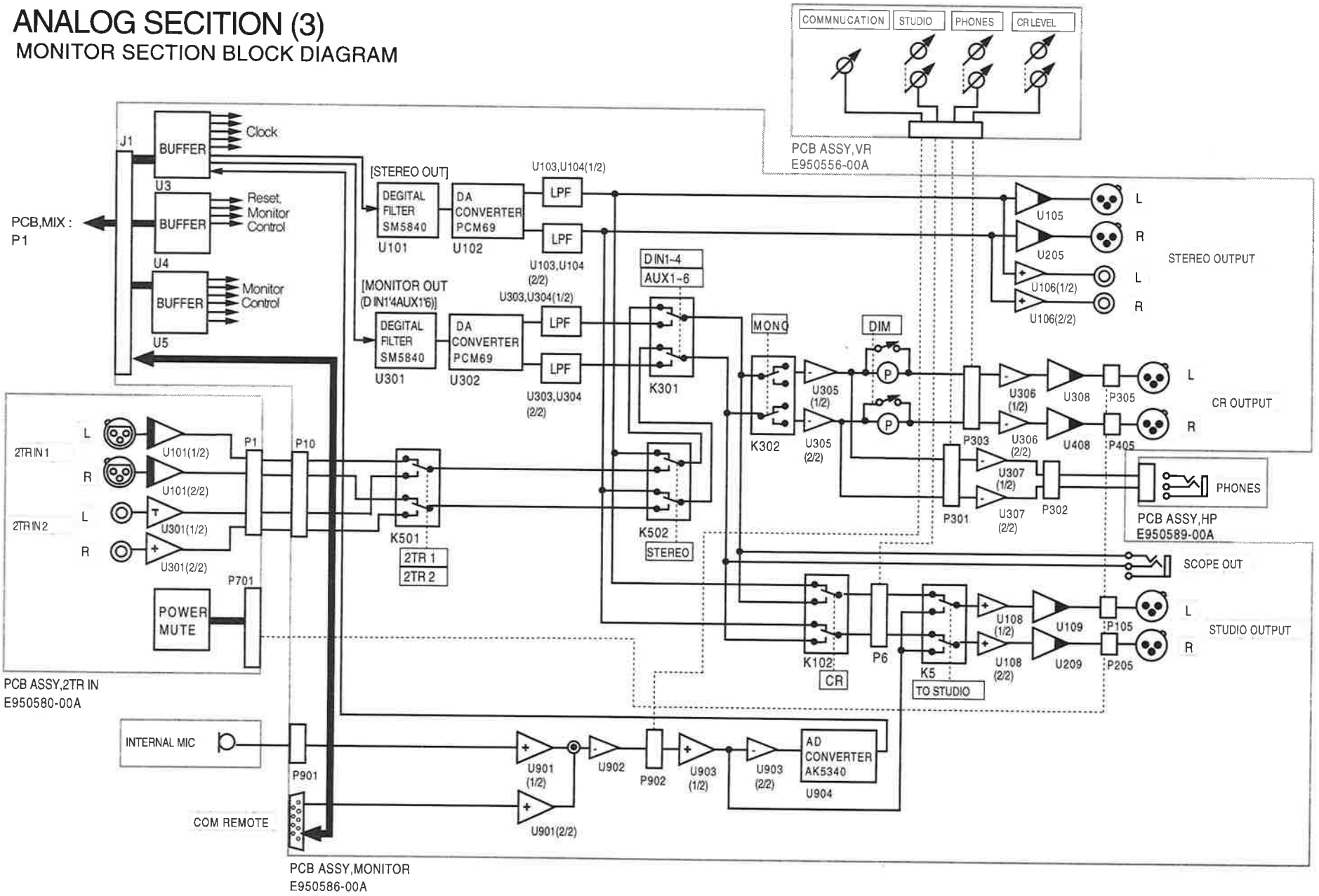

POWER SUPPLY SECITION

POWER SUPPLY SECTION BLOCK DIAGRAM

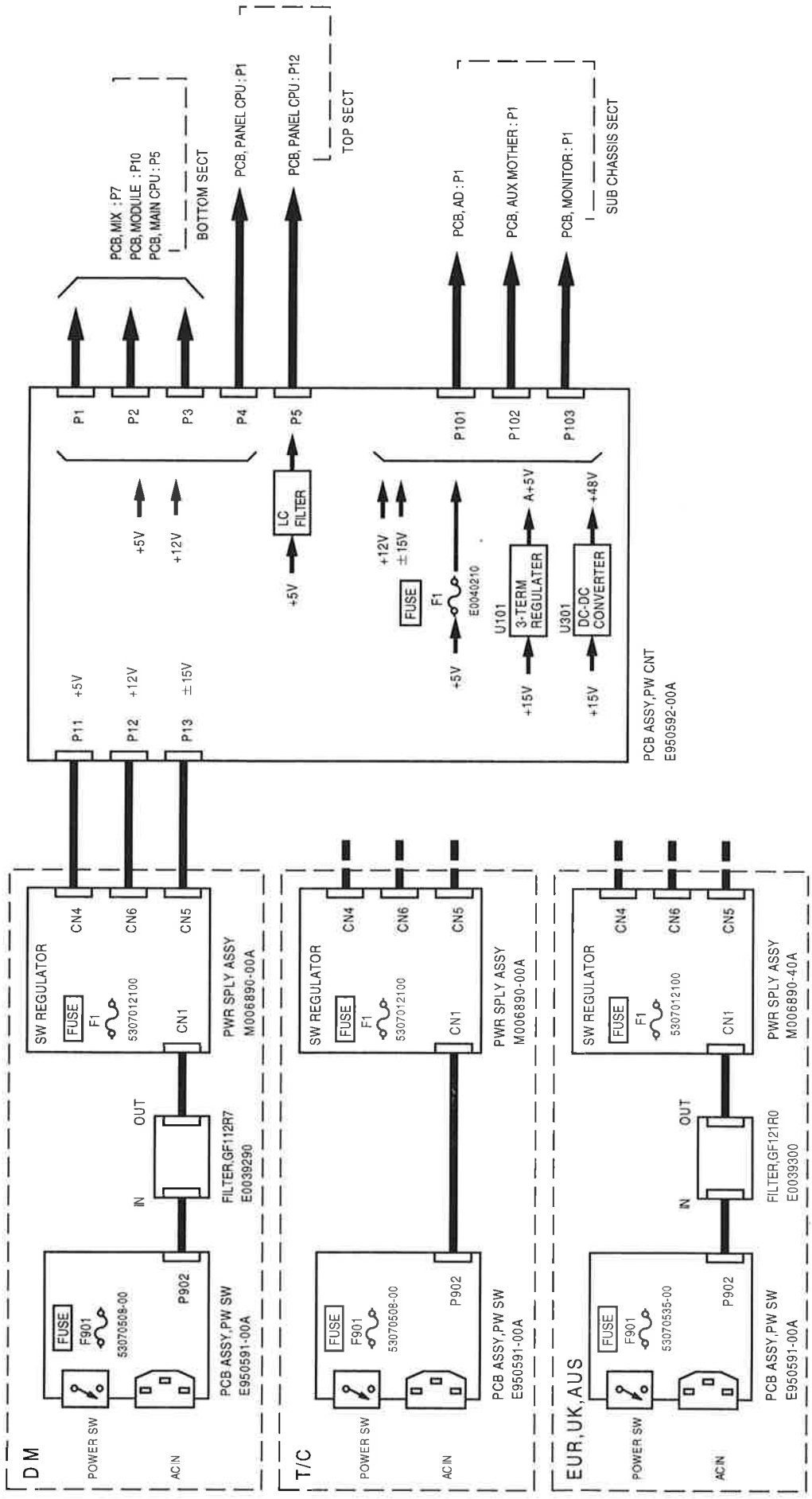

7. DISASSEMBLY PROCEDURE

分解手順

1. TOP PANEL SECTION

Remove the 22 screws indicated, then the top panel section can be stood up on end.

1. トップパネル部

図の22本のネジを外すと、図のようにトップパネル部を立てることができます。

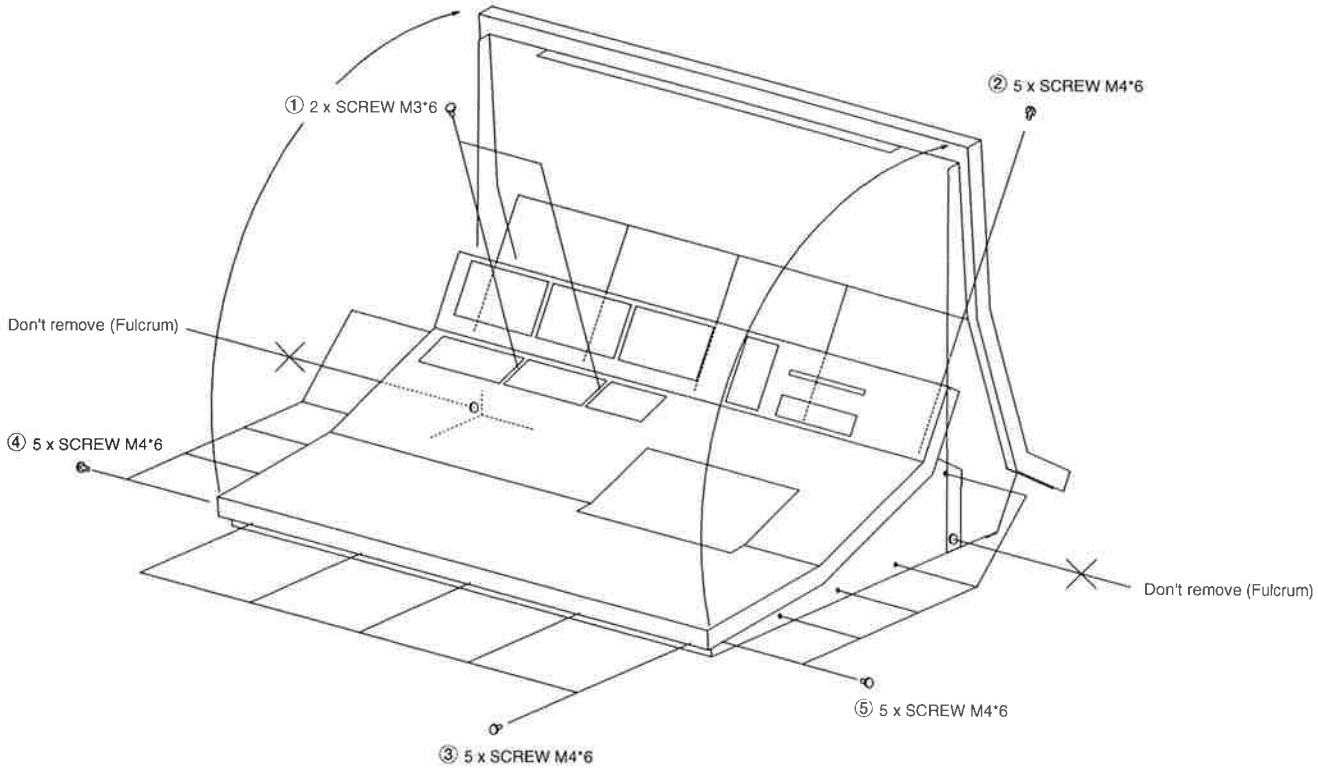

2. SUB CHASSIS SECTION

1. Remove the 6 screws indicated.

2. サブシャーシー部

1. 図の6本のネジを外す。

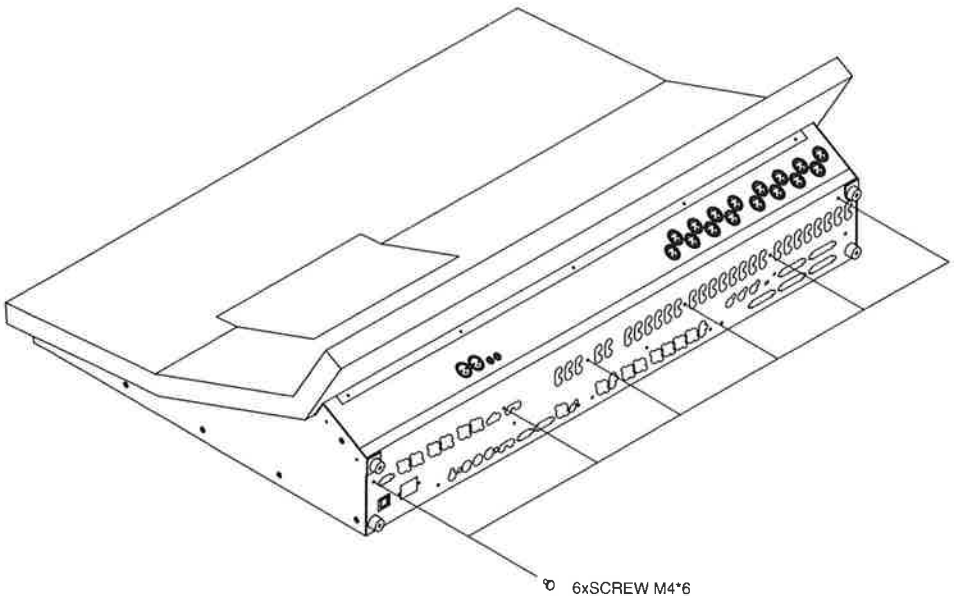

2. Detach the 2 flat cables from P10 and P11 on the PANEL CPU PCB ASSY.
3. Detach the flat cable from J1 on the AD PCB ASSY.
4. Detach the flat cable from J1 on the AUX MOTHER PCB ASSY.
5. Detach the flat cable from J2 on the AUX MOTHER PCB ASSY.
6. Detach the flat cable from J1 on the MONITOR PCB ASSY.
7. Detach the connectors (P6, P301, P302, P303 and P901) on the MONITOR PCB ASSY.
8. Detach the connectors (P101, P102 and P103) on the POWER CNT PCB ASSY.
9. Remove the 3 screws indicated.
10. Remove the SUB CHASSIS SECTION from the BOTTOM SECTION.

2. PANEL CPU PCB ASSYのP10, P11からフラットケーブルを外す。
3. AD PCB ASSYのJ1からフラットケーブルを外す。
4. AUX MOTHER PCB ASSYのJ1からフラットケーブルを外す。
5. AUX MOTHER PCB ASSYのJ2からフラットケーブルを外す。
6. MONITOR PCB ASSYのJ1からフラットケーブルを外す。
7. MONITOR PCB ASSYのコネクター（P6, P301, P302, P303, P901)を外す。
8. POWER CNT PCB ASSYのコネクター(P101, P102, P103)を外す。
9. 図のように3本のネジを外す。
10. サブシャーシー部をボトム部から取り外す。

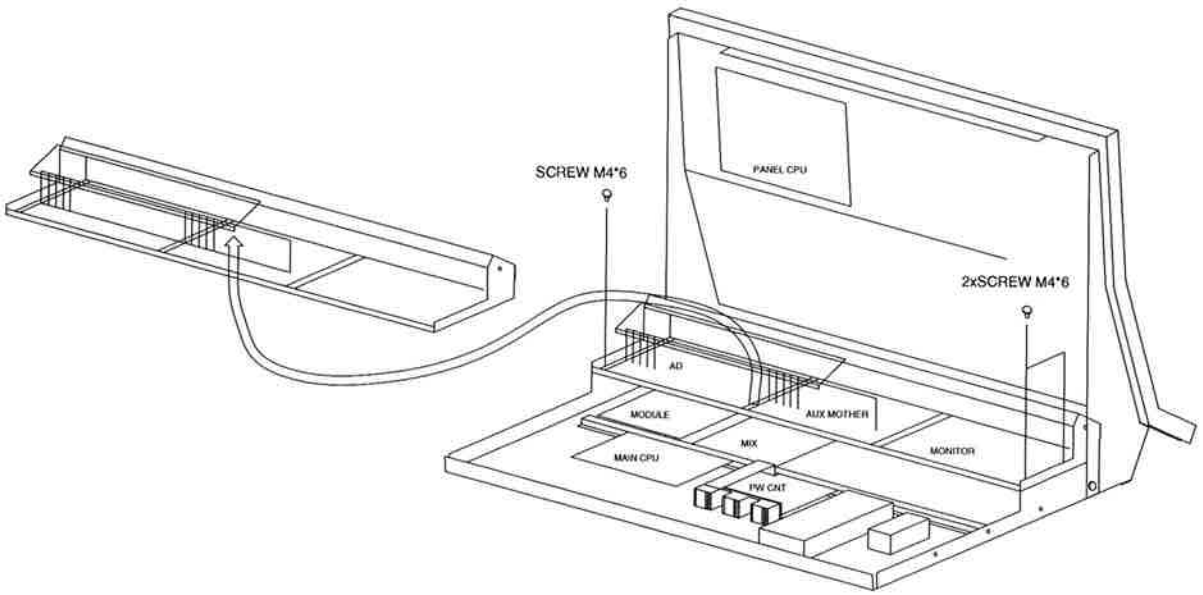

3. MODULE PCB ASSY, MIX PCB ASSY, RS PCB ASSY

● MODULE PCB ASSY
Remove the 3 screws indicated.

● MIX PCB ASSY
Remove the 3 screws indicated.

● RS PCB ASSY
Remove the 3 screws indicated.

3. MODULE PCB ASSY, MIX PCB ASSY, RS PCB ASSY

● MODULE PCB ASSY
図の3本のネジを外す。

● MIX PCB ASSY
図の3本のネジを外す。

● RS PCB ASSY
図の3本のネジを外す。

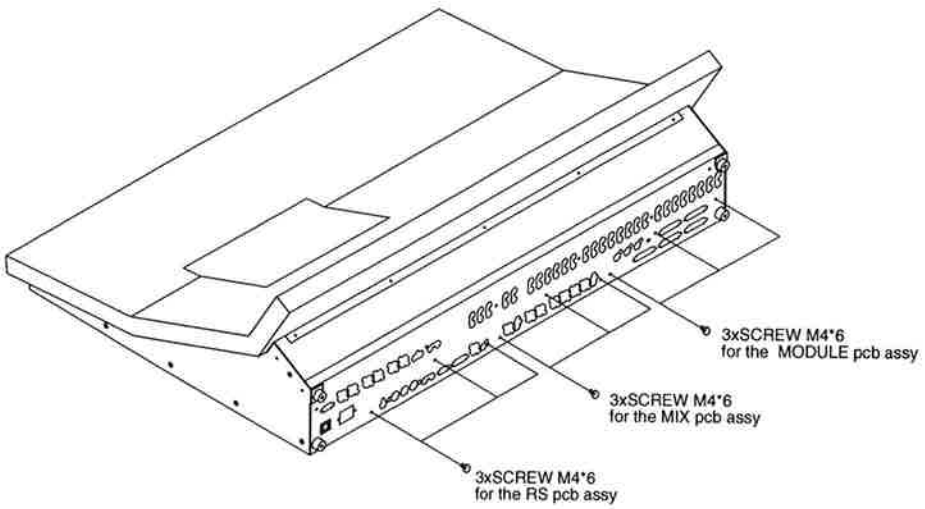

● MODULE PCB ASSY
1. Detach the 2 flat cables from P8 and P9 on the MODULE PCB ASSY.
2. Detach the 2 flat cables from P4 and P7 on the MODULE PCB ASSY.
3. Remove the 5 screws indicated.
4. Remove the MODULE PCB ASSY from the BOTTOM SECTION.

● MIX PCB ASSY
1. Detach the 2 flat cables from P5 and P6 on the MIX PCB ASSY.
2. Detach the 2 flat cables from P2 and P4 on the MIX PCB ASSY.
3. Remove the 5 screws indicated.
4. Remove the MIX PCB ASSY from the BOTTOM SECTION.

● RS PCB ASSY
1. Detach the 2 flat cables from J8 and J9 on the RS PCB ASSY.
2. Remove the RS PCB ASSY from the BOTTOM SECTION.

● MODULE PCB ASSY
1. MODULE PCB ASSYのP8, P9からフラットケーブルを外す。
2. MODULE PCB ASSYのP4, P7からフラットケーブルを外す。
3. 図の5本のネジを外す。
4. MODULE PCB ASSYをボトム部から取り外す。

● MIX PCB ASSY
1. MIX PCB ASSYのP5, P6からフラットケーブルを外す。
2. MIX PCB ASSYのP2, P4からフラットケーブルを外す。
3. 図の5本のネジを外す。
4. MIX PCB ASSYをボトム部から取り外す。

● RS PCB ASSY
1. RS PCB ASSYのJ8, J9からフラットケーブルを外す。
2. RS PCB ASSYをボトム部から取り外す。

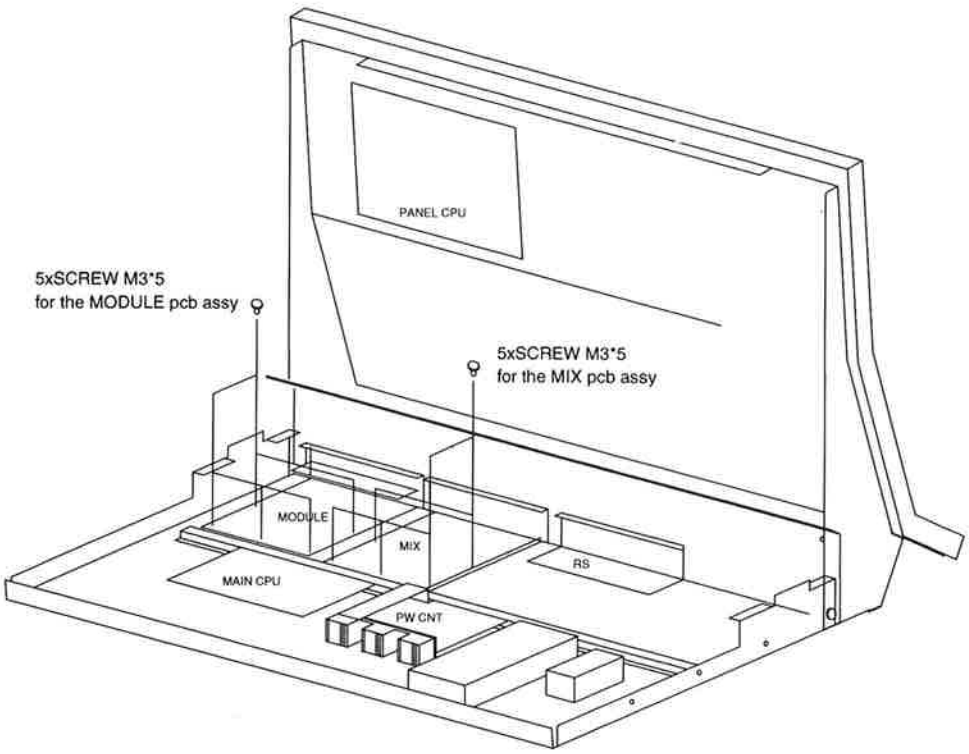

4. ANALOG SECTION

4. アナログ部

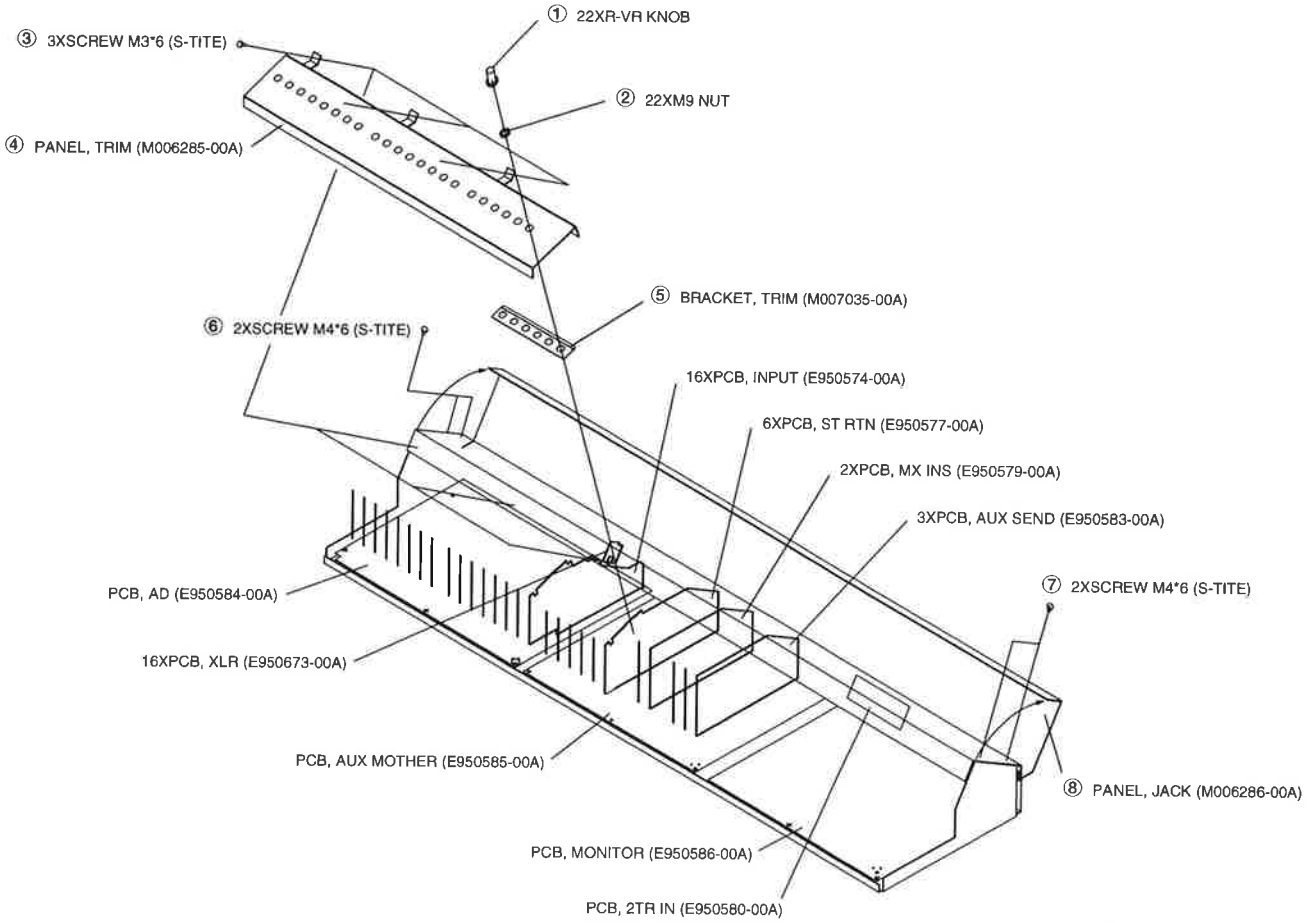

8. SELF DIAGNOSTIC FUNCTION

自己診断機能

This function allows diagnostics to be performed on all sections of the TM-D8000.
After applying power, the Tascam Logo will scroll across the LCD screen. During this time, pressing Shift, MTR Send/Return and Rec. Function 19 all at the same time will make the text "DIAGNOSTIC MODE" appear in the top left corner of the LCD screen. The diagnostic sub-system menu will then appear.

システムの各状態を診断する機能です。

電源を投入してLCD画面上に"TASCAM"の文字がスクロールしている間に、SHITキー、MTR SEND/RETURNキー、REC FUNCTION 19キーを同時に押すと、起動時の画面右上に"DIAGNOSTICS MODE"の文字が表示され、この機能のメニュー画面が表示されます。

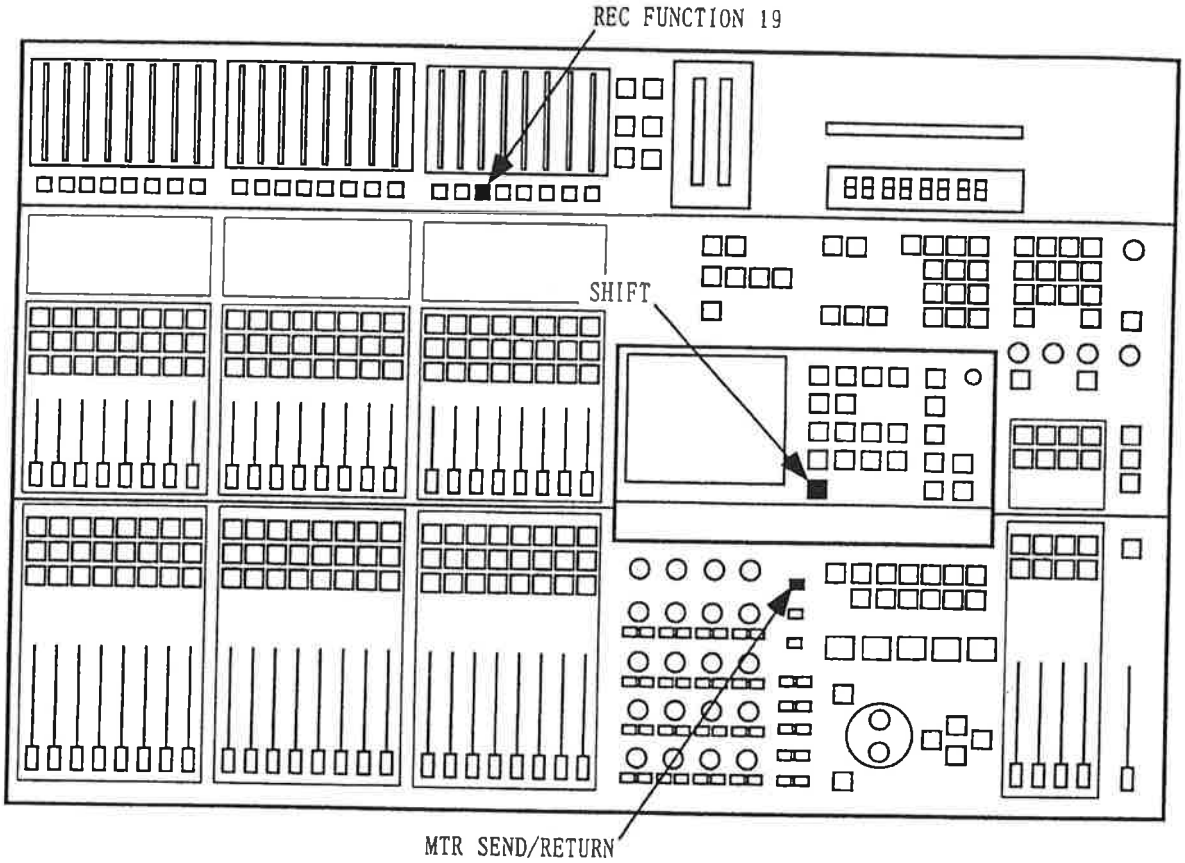

MENU

The Diagnostic mode menu screen can be navigated using either the jog dial or the up and down cursor keys to move the cursor opposite each of the diagnostic tests. Pressing Enter will commence each of the tests.

MENU

自己診断モードのメニュー画面で、JOGダイヤルまたは上下カーソル・キーで各テスト項目にカーソルを合わせ、ENTERキーを押すと、それぞれのテスト・モードに移ります。

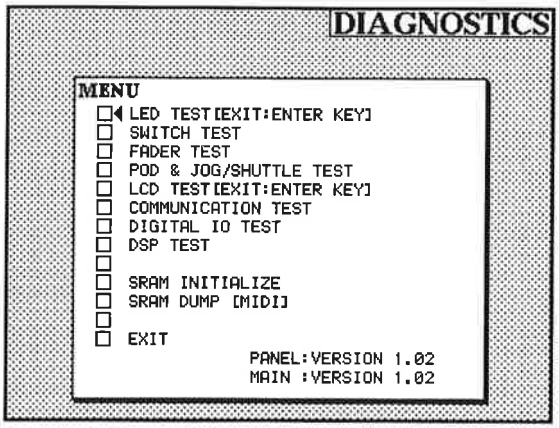

The following is an outline of each of the individual tests.

LED TEST
Checks the lighting and extinction of each led.
SWITCH TEST
Checks the correct functioning of all the switches.
FADER TEST
Checks the reading of Fader levels and the Solo volume control.
POD & JOG / SHUTTLE TEST
Checks the correct operation of the PODs, JOG and Shuttle Dial in the center of the Panel.
LCD TEST
Checks the correct operation of the LCD screen.
COMMUNICATION TEST
Tests communications with external devices.
DIGITAL IO TEST
Checks the correct reading of the condition of the connected digital inputs signals.
DSP TEST
Checks the DSPs and the DRAMs connected to those DSPs.
SRAM INITIALIZE
Performs a factory setting initialization on the backup memory contents.
EXIT
Exits the Diagnostic mode and reboots the TM-D8000 back to normal operation.

メニューの各項目の概要を以下に示します。

LED TEST
各LEDの点灯、消灯のチェックを行います。
SWITCH TEST
各スイッチのON/OFFのチェックを行います。
FADER TEST
フェーダー、SOLOボリューム位置の読み取りのチェックを行います。
POD & JOG / SHUTTLE TEST
パネル面中央のポッド、JOG、シャトルの動作チェックを行います。
LCD TEST
LCD画面の動作チェックを行います。
COMMUNICATION TEST
外部機器との通信テストを行います。
DIGITAL IO TEST
デジタル入出力信号の状態をチェックします。
DSP TEST
DSPおよびDSPに接続されているDRAMのチェックを行います。
SRAM INITIALIZE
バックアップメモリの初期化を行います。
EXIT
自己診断機能を終了し、システムを自動的に再起動します。

● LED TEST

①Pressing the ENTER key once will light all LEDs on the Panel surface, then pressing once again will clear all LEDs.
②This pattern is repeated once more, then pressing ENTER once will start the LEDs lighting one at a time in a pattern starting from the top of the leftmost meter and working right and down. When the UPDATE LED of the Stereo Output section has lit, pressing ENTER will return the control back to the main menu. If these are any LEDs which did not light during this process, it is possible that there is a miss-insertion of a cable to one of the Panel PCBs. If 2 or more LEDs light at the same time, it is possible that there is a short, due to a PCB fault or a cable miss-insertion.
③Pressing the ENTER key during the sequence test will abort the LED test and return control to the main menu.

This test only covers the LEDs that are under direct CPU control, and does not cover the +48V or Signal LEDs, which are driven from the Analog input circuits.

● LED TEST

①メニュー画面でENTERキーを押すことによりパネル上の全LEDが点灯し、再度ENTERキーを押すことにより全LEDが消灯します。
②この操作をもう一度繰り返し、更にENTERキーを押すことでLEDがCH1のメーター最上段から、1つ1つ左から右、上から下へと順に点灯します。ステレオ・モジュールのUPDATE LEDの点灯が最後で、その後ENTERキーを押すことによりメイン・メニュー画面に戻ります。
このとき点灯しないLEDがある場合は、LEDの不良、コネクタの誤挿入等が考えられます。また消灯しないLED、2個以上同時に点灯するLEDは、コネクタの誤挿入等を含む信号線のショートが考えられます。
③順にLEDが点灯している間にENTERキーを押すことにより、いつでもLED TESTを中断し、メニュー画面に戻ることができます。

尚、このテストを行うLEDは、CPUのロジック処理により制御しているものが対象となるため、+48V LED、SINGLE LEDは除きます。

● SWITCH TEST

Pressing ENTER at this position will bring up the Switch Test diagnostics screen.

● SWITCH TEST

カーソルの確定でスイッチテストのサブ画面を表示します。

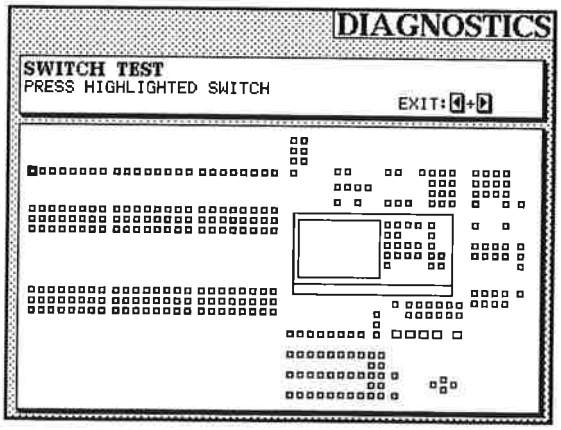

①When a switch on the Panel surface is pressed, the indicator for that switch in the LCD screen will change from open to filled while the button is held down. If a switch is associated with a LED, that LED will also light while the button is held down. The SHIFT key alone is different, in that it has a toggle action, and the LED and LCD indicator will reflect this action.
②Pressing the switch witch is highlighted in the LCD screen will delete that switch from the display, and the next switch will be highlighted. Following this pattern, when all the switches have been removed, the Switch test is over and the screen will return to the main menu. If there are any Switches which do not respond to being pressed, it is possible that there is a miss-insertion of a cable into a connector on one of the panel PCBs or that that switch is damaged.
③Pressing the Cursor Left and Cursor Right Switches together will abort the Switch Test and return the display to the main menu.

This test only covers switches which are scanned by the CPU, and does not cover the +48V, Line or Pad buttons, which are connected to the analog input circuit.

①パネル上のスイッチが押されている間、LCD画面上で、押されたスイッチに対応する“□”表示が反転表示されます。
また関連するLEDのあるスイッチは、押している間そのLEDが点灯します。但し、SHIFTキーはLEDがトグル動作で点灯、消灯を繰り返します。
②画面上段に指示されたスイッチを押すと、LCD画面上の“□”表示が消えて、画面上段に次のスイッチが指示されます。これを繰り返し、全てのスイッチ表示が消えるとスイッチ・テストは終了します。
“□”表示を消すことができない場合は、コネクタの誤挿入等による信号線の断線、スイッチの不良等が考えられます。
③カーソル・スイッチ“◀”と“▶”を同時に押すことにより、いつでもSWITCH TESTを中断し、メニュー画面に戻ることができます。

尚、このテストを行うスイッチは、CPUのロジック処理により制御しているものが対象となるため、+48V、LINE、PADのスイッチは除きます。

● FADER TEST

Pressing ENTER at this position will bring up the Fader Test diagnostics screen.

● FADER TEST

カーソルの確定でフェーダーテストのサブ画面を表示します。

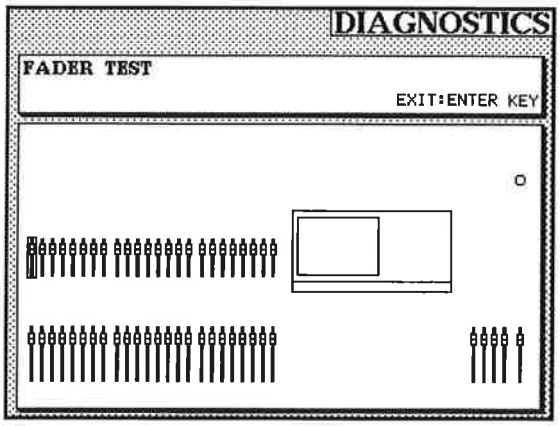

①When a fader is moved, the corresponding image in the LCD screen will be highlighted, and the fader position displayed in the upper box. Each fader will report its position as 0 for its minimum position (lowest) and 255 for its uppermost position.
②By moving the fader indicated at the top of the screen to the topmost position from any other position, and then moving it to the bottom-most position, the indicator will move to the next position.
③In this manner, the Upper faders, Lower faders, group faders and master faders can be tested. Finally the same test is performed on the Solo volume control and the Fader diagnostic will end and the screen return to the main menu.
④Pressing ENTER at any time will abort the test and return control to the main menu.

This test is only available for the controls which are scanned by the Panel CPU's A/D port, and does not cover the volume controls for the analog monitor functions.

①操作されたフェーダーには枠が表示され、フェーダーの位置は画面上段に表示されます。この数値は、各フェーダーのMINの位置を“0”、MAXの位置を“255”として表示します。
②画面上段に指示されたフェーダーをMAX以外の位置からMAXの位置に動かし、MAXからMINに動かすと画面上段に次のフェーダーが指示されます。
③スモール・フェーダー、ラージ・フェーダー、GROUPフェーダー、STEREOフェーダーの順にテストを行い、最後にSOLOボリュームのテストによりフェーダー・テストが終了します。
④ENTERキーを押すことによりFADER TESTを中断し、メニュー画面に戻ることができます。

尚、このテストを行うフェーダー、ボリュームは、PANEL CPUでA/D変換して処理しているものが対象になるため、アナログ・モニター系ボリュームは除きます。

● POD & JOG/SHUTTLE TEST

Pressing ENTER at this position will bring up the POD and JOG/SHUTTLE diagnostics screen.

● POD & JOG/SHUTTLE TEST

カーソルの確定でポッドのサブ画面を表示します。

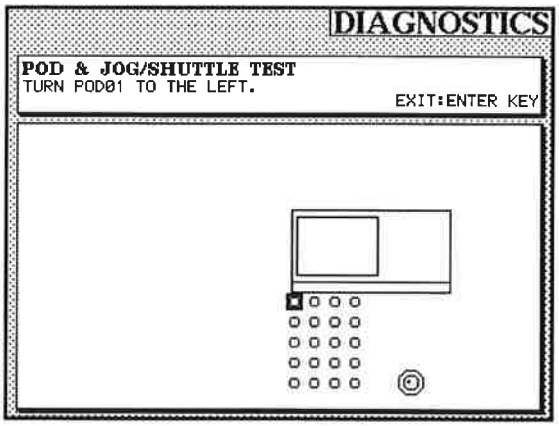

①Any POD which is moved will be highlighted on the screen. The number of steps read by the CPU as the pod is rotated will be displayed in the upper part of the screen.

①操作されたPODは枠付きで表示され、PODの位置は画面上段に表示されます。この数値は各PODがCPUの読み取り周期中に何ステップ回されたかを、相対値で表示します。

②By turning the POD indicated in the upper part of the LCD to the left 47 steps, followed by 47 steps to the right, the next POD will be highlighted. This test will continue for all of the 20 PODs, followed by a similar test for the JOG DIAL control. Finally moving the Shuttle Ring fully left and fully right will end the POD test and return control to the main menu.
③Pressing ENTER at any time will abort the test and return control to the main menu.

● LCD TEST

①After pressing the ENTER key once, the LCD screen will automatically cycle between the current display, the startup screen, an all white screen and an all blue screen continuously at about 1 change per second.
②Pressing ENTER at any time will return the screen and control to the main menu.

● COMMUNICATION TEST

Pressing ENTER at this position will bring up the Communication diagnostics screen.
Moving the cursor to the Exit box and pressing ENTER will return the screen to the main menu.

②画面上段に指示されたPODを右に47ステップ、左に47ステップ回転させると、LCD画面のPOD表示の部分が消えて、画面上段に次のPODが指示されます。
20個のPODを順にテストした後、画面上段の指示通りにJOG ダイヤル、シャトルを操作すると、POD & JOG/SHUTTLE TESTが終了します。
③ENTERキーを押すことにより、いつでもPOD & JOG/SHUTTLE TESTを中断し、メニュー画面に戻ることができます。

● LCD TEST

①メニュー画面でENTERキーを押すと、起動画面、全画面ON、全画面OFF、メニュー画面を順に繰り返し表示します。
②ENTERキーを押すことにより、LCD TESTを終了しメニュー画面に戻ります。

● COMMUNICATION TEST

カーソルの確定でコミュニケーションテストのサブ画面を表示します。
カーソルのEXIT選択でメインテスト画面に戻ります。

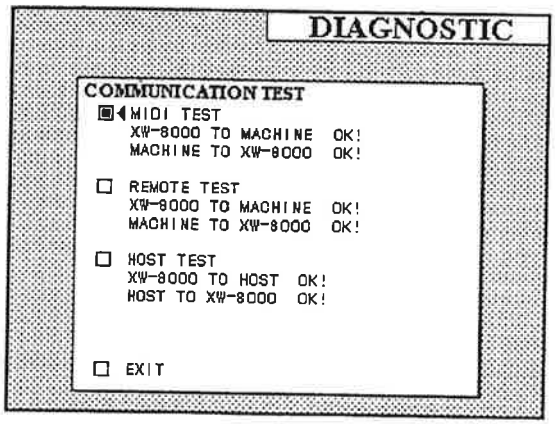

①MIDI Test
With a Cable connected from the MIDI OUT port to the MIDI IN port, this test will check the integrity of the MIDI ports.
②REMOTE Test
With a DTRS device connected to the REMOTE OUT port, a STOP command will be sent, and the response read to check the integrity of the Remote comms. data.
③HOST test
With a Short-Plug connected to the TO HOST port (RXD and TXD wired together), this test will check the integrity of the host serial data.

Note) This test is not supported in version 1.01 of the software.
The cursor may be moved and tests selected, but no data check will be performed.
This test is supported after version 1.02 of the software.

①MIDIテスト
MIDI IN端子とMIDI OUT端子をケーブルでショートし、バルク・データの転送結果を判断します。
②REMOTEテスト
DTRS機器をREMOTE OUT端子に接続し、STOPコマンドの転送結果を判断します。
③HOSTテスト
TO HOST端子に入出力のデータ信号 (RXD, TXD)をショートしたコネクタを接続し、コマンドの転送結果を判断します。

注) このテスト項目は、ソフトウェア V1.01では対応しておらず、カーソルの移動、選択は可能ですが、実際に外部機器との通信は行っていません。
ソフトウェア V1.02以降では対応しています。

● DIGITAL IO TEST

Pressing ENTER at this position will bring up the Digital IO diagnostics screen.

● DIGITAL IO TEST

カーソルの確定でデジタルIOテストのサブ画面を表示します。

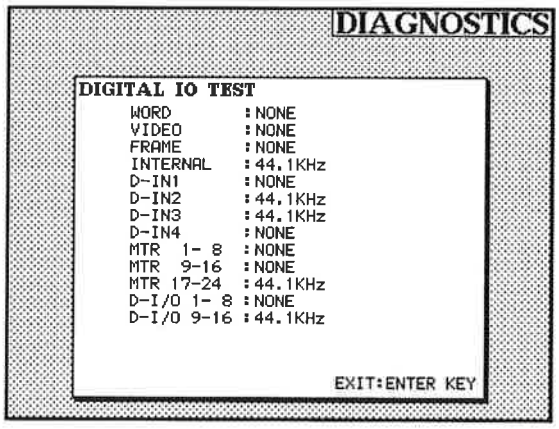

The presence and clock frequency of any signal source connected to the digital i/o ports will be displayed. Pressing ENTER will then return control to the main menu. In order for the software to check every port, it will take about 10-15 seconds for the data to appear.

Note) In order for the software to read stable data, please do not switch on or off devices connected to the mixer, or change the operating Fs of any connected device.

接続されているデジタル機器の接続の有無、クロック周波数を表示します。
表示された後にENTERキーを押すことにより、メニュー画面に戻ります。

注）全てのデジタル入出力端子のクロックを判別しているため、クロック表示が出るまでに数十秒掛かります。

● DSP TEST

Pressing ENTER at this position will bring up the DSP diagnostics screen.

● DSP TEST

カーソルの確定でDSPテストのサブ画面を表示します。

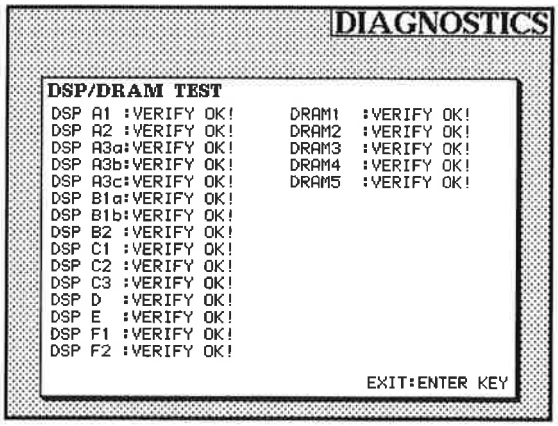

Data is downloaded to each DSP and verified, followed by a test which writes and then reads data in each of the DRAMs connected to the DSPs. The result of these tests is displayed as OK or NO in the LCD screen. Pressing ENTER will return control to the main menu.

Note that this test is automatically performed when the power is first applied to the TM-D8000, so if there is a problem, an error message will be displayed before the diagnostic mode can be started.

各DSPのダウンロードのベリファイ結果、およびDSPに接続されたDRAMのリード、ライトのベリファイ結果をOKまたはNOで表示します。
表示された後にENTERキーを押すことにより、メニュー画面に戻ります。

但し、このテスト項目に関しては、同様のチェックを電源投入時に行いますので、ベリファイ結果がエラーのときは自己診断モードに切り替わる前にエラーメッセージとして表示されます。

● SRAM INITIALIZE

This is used to reset the Battery backed-up SRAM to its factory condition.

On performing this initialization, a message will be displayed and the TM-D8000 will halt. On restarting the mixer (by re-applying power), all the mixer parameters will have been reset.

Note) The User Libraries are also cleared by this process, so caution is advised when using this option.
If you do not want erase the parameters and library, refer to page 6.

● EXIT

Selecting this option will exit the Diagnostic mode and automatically restart the TM-D8000.

● SRAM INITIALIZE

バックアップメモリを工場出荷時の値に初期化します。

確認メッセージを表示し停止状態になった後、電源を再投入することにより、全てのパラメータが初期値の状態で起動します。

注）この操作により、設定されたライブラリ等のパラメータもクリアされますので注意が必要です。
各パラメーターやライブラリーを消去したくない場合は、6ページの手順に従ってSRAMデーターのバックアップをしてください。

● EXIT

自己診断モードを終了し、システムを再起動します。

9. TROUBLESHOOTING
トラブルシューティング

PANEL CPU PCB Troubleshooting Flowchart with Diagnostic Mode

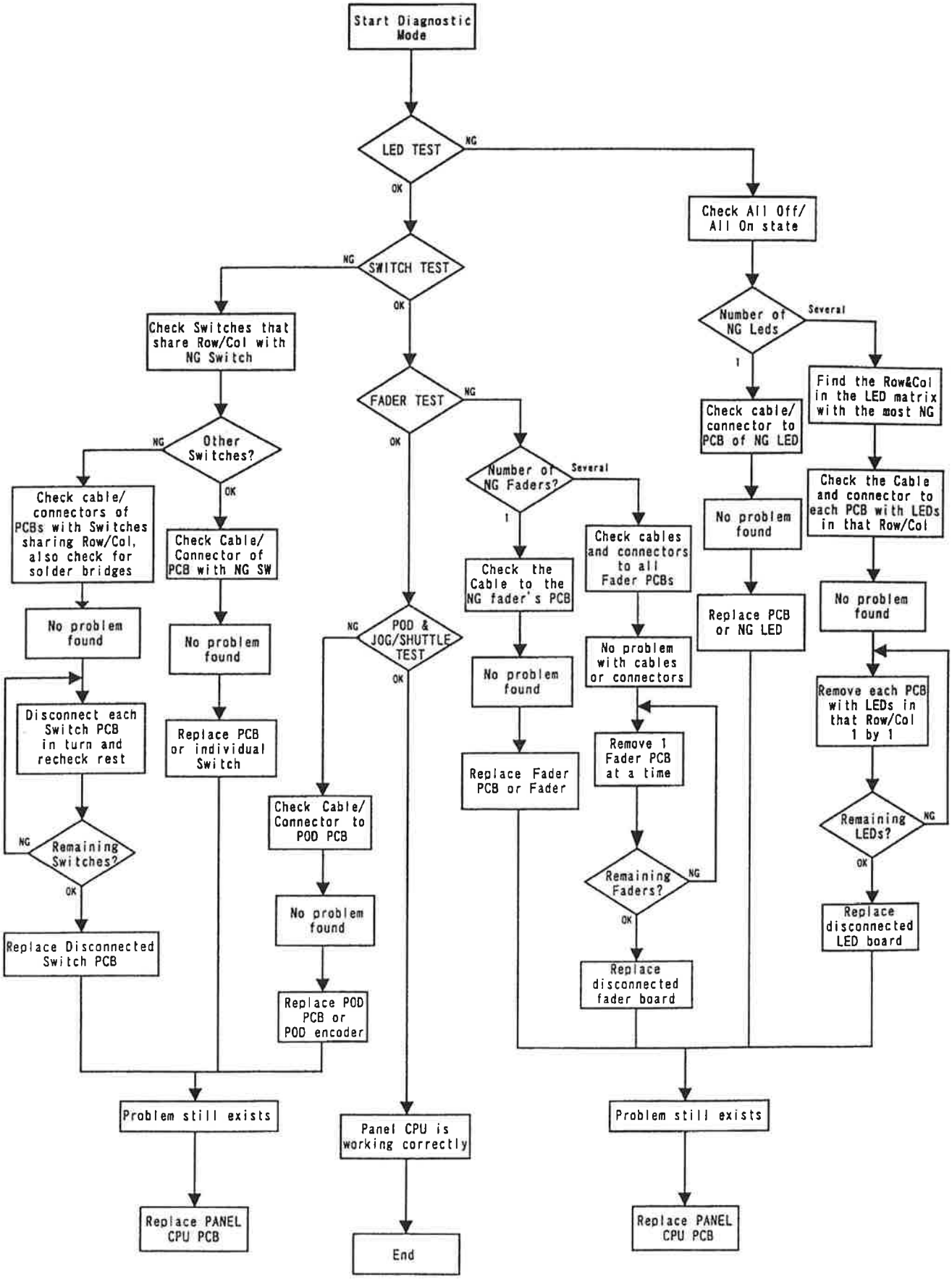

自己診断モード時のPANEL CPU PCB系の故障診断

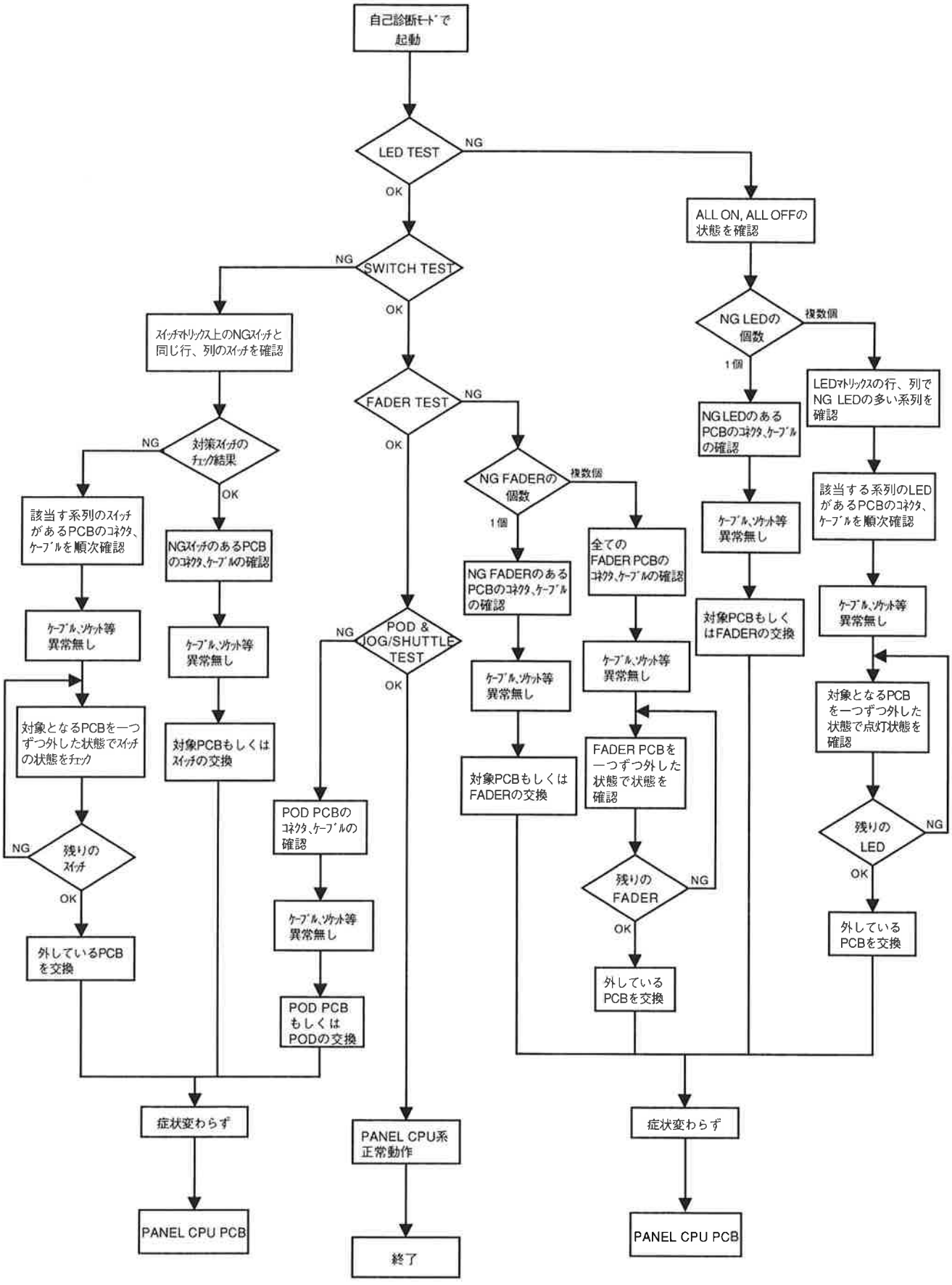

MAIN CPU Troubleshooting Flowchart

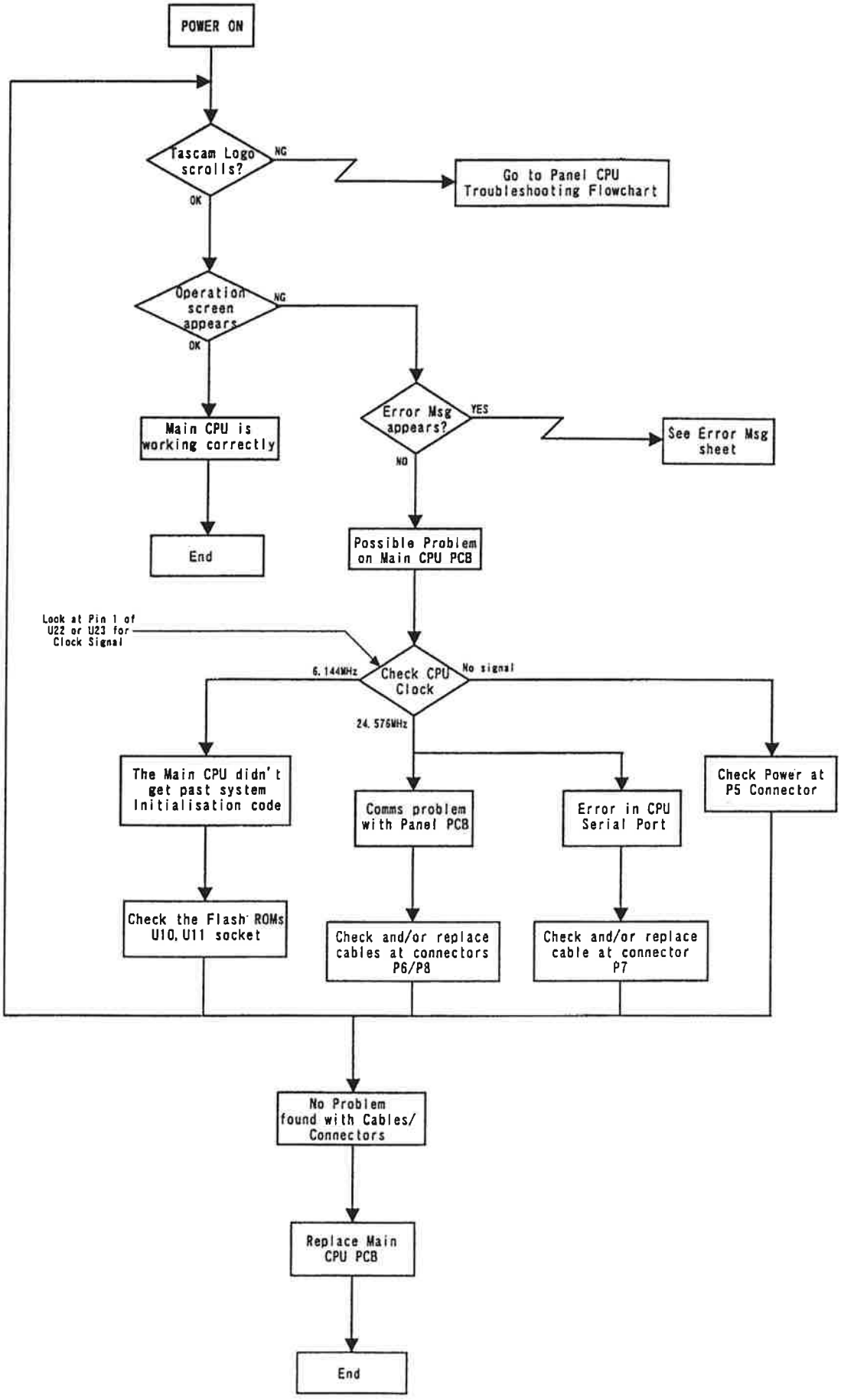

MAIN CPU PCB系の故障診断

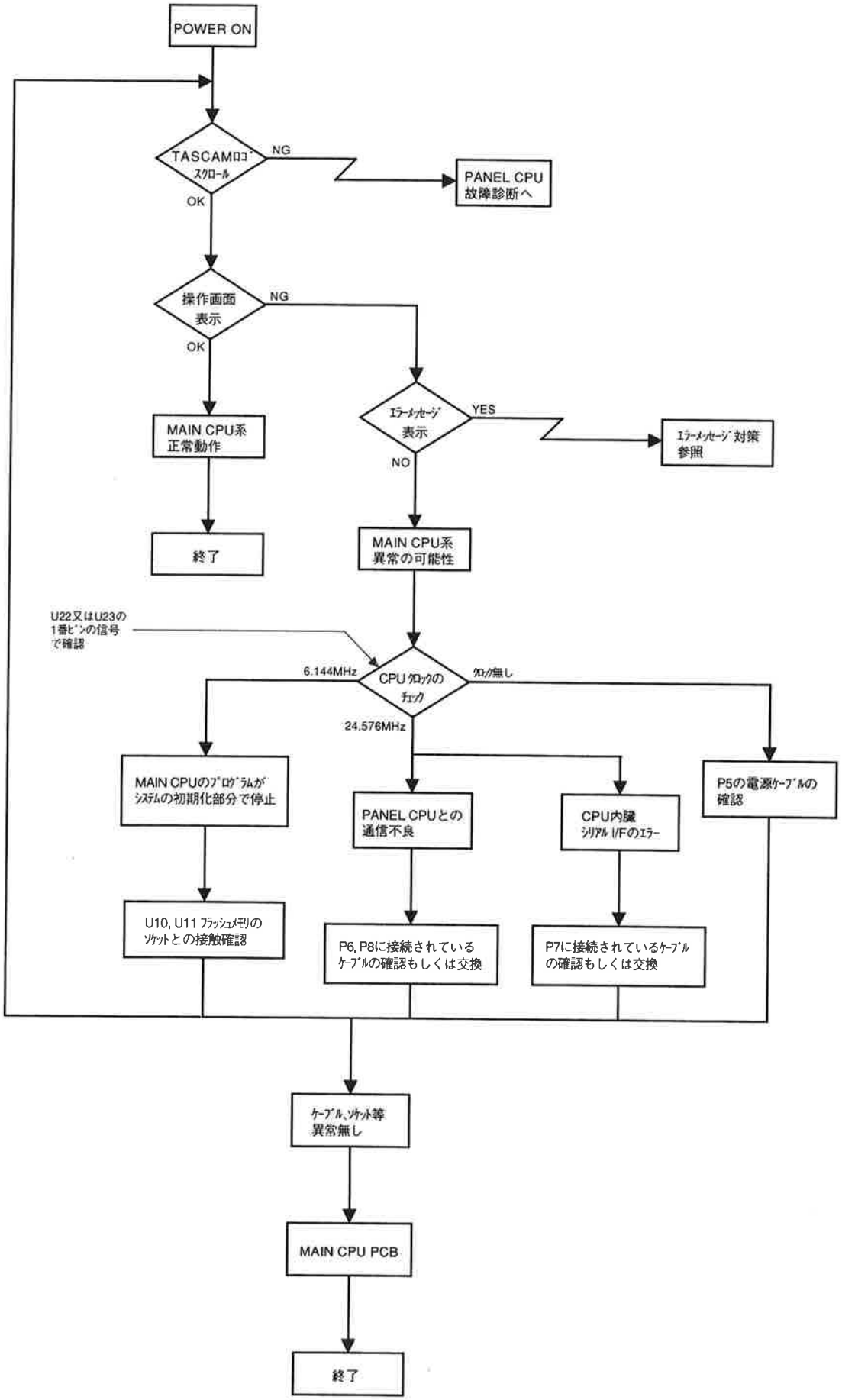

PANEL CPU Failure Diagnostic Chart

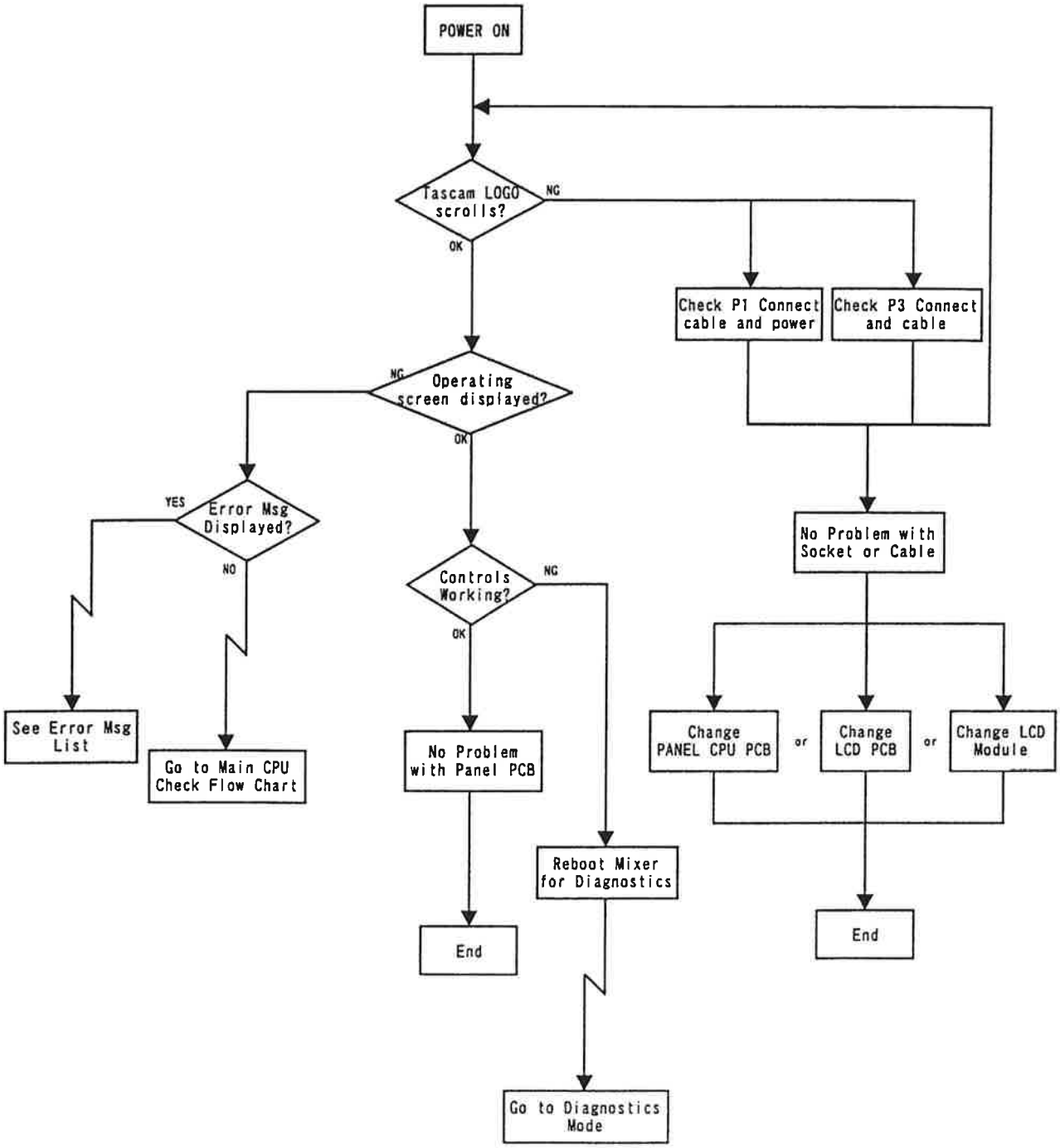

PANEL CPU PCB系の故障診断

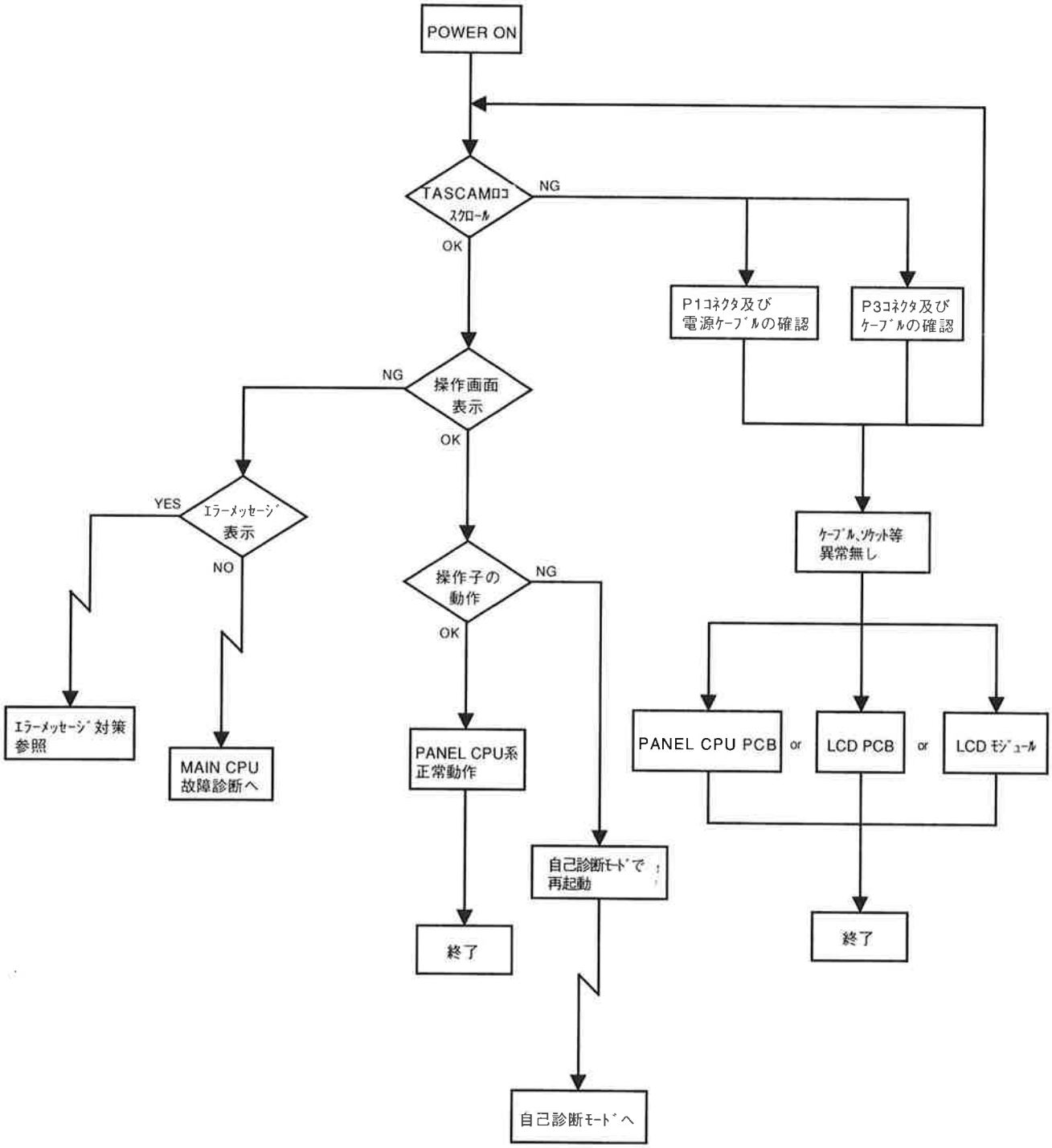

When a signal is not present at an output, or is not visible on the meters, please check the system settings (digital i/o parameters, clock settings, buss assignment, automation mode, group settings and fader levels) comprehensively before diagnosing a hardware problem. This part shows the steps to take to determine the point a hardware problem.

1. Stereo Out signal is not present.

■ Just Analog or Digital signal is not being output.
Q. Is the Analog out dead?
A. Possible problem with the D/A converter circuitry on the MONITOR PCB.
Q. Is the Digital out dead?
A. Possible problem with the AES/EBU IF Driver IC (YM3437C) or connecting circuitry on the MIX PCB.

■ Both Analog and Digital signal are not being output.
First try assigning the input signal to Buss 1-8.
Q. Does the MTR SND 1-24 Meters register a signal?
A. Possible Problem with digital data signal after DSP-E.
→ Go to Part 4 [TDIF Outputs not present]

■ MTR SND Meters is not registering a signal.
Try assigning the input signal to Aux Sends 1-6, monitoring on the AUX SND meters.
Q. Is Aux SND 1-4 not registering?
A. Possible problem with signal between DSP-D on the MODULE PCB and DSP-B1A on the MIX PCB.
Q. Is Aux SND 5-6 not registering?
A. Possible problem with signal between DSP-C1 and DSP-B1A on the MIX PCB.

■ Aux 1-6 Meters is not registering at all.
Change meters to POST EQ input signal.
Q. Is the POST EQ meter registering?
A. Possible problem with digital data signal after DSP-D on the MODULE PCB.

■ The POST EQ meter is not registering at all.
Change meters to PRE EQ input signal.
Q. Is the PRE EQ meter registering?
A. Possible problem with digital data signal between DSP-A and DSP-D on the MODULE PCB.

■ The PRE EQ meter is not registering at all.
Q. Is the Input set to Analog?
A. Possible problem with digital data signal between AD PCB D/A converter output and DSP-A1, 2.
Q. Is the Input set to Digital?
A. Possible problem with digital data signal between D-sub25 connector and DSP-A.
Q. Is the Input set DIN1-4?
Try assigning the DIN inputs to MTR17-24 as well.
Q. Is the Channel Input 9-16 Meter not registering?
A. Possible problem with digital data signal between AES/EBU IF Receiver IC and DSP-A2.
Q. Are the MTR RTN 17-24 meters not registering?
A. Possible problem with digital data signal between AES/EBU IF Receiver IC and DSP-A3C.
→ Go to part 2 [Monitor outputs not present]

信号が出力されない、またはメーターが振れない場合はハードウェアをチェックする前に、まずシステム設定（DIGITAL I/Oパラメーター、クロック設定、バス・アサイン、オートメーション・モード、グループ設定、フェーダー・レベルなど）をチェックしてください。
ここでは、ハードウェアの不具合部分を探すためのステップを示します。

1. STEREO OUTが出力されない場合

■ **ANALOGまたはDIGITAL STEREO OUTのいずれかが出力されない場合**
Q. ANALOG STEREO OUTのみ出力されない
A. MONITOR PCBのD/A CONV周辺の不具合の可能性あり
Q. DIGITAL STEREO OUTのみ出力されない
A. MIX PCBのAES/EBU IF DRV IC (YM3437C)周辺の不具合の可能性あり

■ **ANALOG、DIGITALともにSTEREO OUTが出力されない場合**
信号をBUSS 1-8にアサインしてみる
Q. MTR SND 1-24メーターは正しく振れている
A. MIX PCBのDSP_E以降の不具合の可能性あり
→「4. TDIF系が出力されない場合」参照

■ **MTR SNDメーターが何も振れない場合**
信号をAUX SND 1-6に送ってみる（メーターをAUX SNDに切り替える）
Q. AUX SND 1-4が振れない場合
A. MODULE PCBのDSP_D－MIX PCBのDSP_B1A間の不具合の可能性あり
Q. AUX SND 5-6が振れない場合
A. MIX PCBのDSP_B1A－MIX PCBのDSP_C1間の不具合の可能性あり

■ **AUX SND 1-6メーターが振れない場合（メーターをPOST EQに切り替える）**
Q. POST EQメーターは振れている
A. MODULE PCBのDSP_D以降の不具合の可能性あり

■ **POST EQメーターが振れない場合（メーターをPRE EQに切り替える）**
Q. PRE EQメーターは振れている
A. MODULE PCBのDSP_A－DSP_D間の不具合の可能性あり

■ **PRE EQメーターが振れない場合**
Q. 入力がANALOG INPUTの場合
A. AD PCBのD/A CONV－DSP_A1, 2間の不具合の可能性あり
Q. 入力がTDIFの場合
A. Dsub 25－DSP_A間の不具合の可能性あり
Q. 入力がDIN1-4の場合
(DIN1-4をMTR 17-24にアサインしてみる)
Q. INPUT 9-16メーターが振れない場合
A. AES/EBU IF RCV IC－DSP_A2間の不具合の可能性あり
Q. MTR RTN 17-24メーターが振れない場合
A. AES/EBU IF RCV IC－DSP_A3C間の不具合の可能性あり
→「2. MONITOR系が出力されない場合」参照

2. Monitor outputs not present.

Try selecting different outputs.

■ CR Out, Phones not working.

● Stereo Out also not output.

Q. Is the Analog Stereo Out working?

A. Possible problem with the Relay on the MONITOR PCB.

Q. Is the Analog Stereo Out not working?

A. → Go to part 1 [Stereo Out signal is not present]

● 2TR1, 2 also not working.

A. Possible problem with the Relay on the MONITOR PCB.

● AUX 1-6, PFL also not working.

Q. Is the Digital Stereo Out working?

A. Possible problem with D/A Converter or circuitry on the MONITOR PCB.

Q. Is the Digital Stereo Out not working?

A. → Go to part 1 [Stereo Out signal is not present]

● DIN 1-4 also not working.

Try assigning DIN 1-4 to Channel Input 9-16 or MTR RTN 17-24

Q. Does Neither Channel 9-16 nor MTR RTN 17-24 meters register?

A. Possible problem with the AES/EBU IF Receiver IC for DIN 1-4

■ Studio Out signal not present.

Q. Is it possible to switch the CR and Studio Monitors?

A. Possible problem with Relay on the MONITOR PCB.

Q. Is Stereo Out also not working?

A. → Go to part 1 [Stereo Out signal is not present]

3. Aux 1-6 Outputs not working.

■ Analog Aux Sends 1-6 signals not present.

Q. Is the Aux SND meter registering?

A. Possible problem with the D/A Converter or circuitry on the AUX MOTHER PCB.

Q. Is the Aux SND meter not registering?

A. → Go to part 1 [Stereo Out signal is not present].

■ Digital Aux Send 3-4 signal not present.

Q. Is the Analog 3-4 Aux output working?

A. Possible problem with the AES/EBU IF Driver IC (3437C) or circuitry on the MIX PCB.

Q. Are all of Analog Aux 1-6 outputs not working?

A. → Go to part 1 [Stereo Out signal is not present].

4. TDIF Outputs [MTR SND 1-24, D I/O 1-16] are not working.

■ MTR SND 1-16 Outputs not working.

Change setting to Direct Out.

Q. Are the MTR SND 1-16 Meters not responding?

A. Possible problem with digital data signal between DSP-B1A and DSP-C1 on the MIX PCB.

Change setting to Buss Out.

Q. Are the MTR SND 1-16 Meters not responding?

A. Possible problem with digital data signal between DSP-C1 and DSP-E on the MIX PCB.

→ Go to part 1 [Stereo Out signal is not present] [MTR SND Meters is not registering a signal]

■ MTR 17-24 or D I/O 1-16 Outputs not working.

Q. Are the MTR 17-24 Meters responding?

A. Possible problem with digital data signal near to DSP-E on the MIX PCB.

Q. Are the MTR 17-24 Meters not responding?

A. Possible problem with digital data signal between DSPs-C1, 2, 3 and DSP-E on the MIX PCB.

→ Go to part 1 [Stereo Out signal is not present] [MTR SND Meters is not registering a signal]

2. MONITOR系（CR OUT, STUDIO OUT, PHONES）が出力されない場合

（モニターソースを切り替える）

■ CR OUT、PHONESが出力されない場合

● STEREO OUTが出力されない場合

Q. ANALOG STEREO OUTが出力されている

A. MONITOR PCBのリレースイッチが切り替わっていない可能性あり

Q. ANALOG STEREO OUTが出力されていない

A.「1. STEREO OUTが出力されない場合」参照

● 2TR 1, 2が出力されない場合

A. MONITOR PCBのリレースイッチが切り替わっていない可能性あり

● AUX 1-6、PFLが出力されない場合

Q. DIGITAL STEREO OUTは出力されている

A. MONITOR PCBのD/A CONV周辺の不具合の可能性あり

Q. DIGITAL STEREO OUTが出力されていない

A.「1. STEREO OUTが出力されない場合」参照

● DIN 1-4が出力されない場合

（DIN 1-4をINPUT 9-16またはMTR 17-24にアサインしてみる）

Q. INPUT 9-16メーター、MTR RTN 17-24メーターのいずれも振れない場合

A. MIX PCBのD IN 1-4（AES/EBU IF RCV IC）周辺の不具合の可能性あり

■ STUDIO OUTが出力されない場合

Q. CR、STEREOが切り替わらない場合

A. MONITOR PCBのリレースイッチが切り替わっていない可能性あり

Q. STEREO OUTが出力されない場合

A.「1. STEREO OUTが出力されない場合」参照

3. AUX SND 1-6が出力されない場合

■ ANALOG AUX SND 1-6が出力されない場合

Q. AUX SNDメーターが振れている場合

A. AUX MOTHER PCBのD/A CONV周辺の不具合の可能性あり

Q. AUX SNDメーターが振れない場合

A.「1. STEREO OUTが出力されない場合」参照

■ DIGITAL AUX SND 3-4が出力されない場合

Q. ANALOG AUX SND 3-4が出力されている場合

A. MIX PCBのAES/EBU IF DRV IC（3437C）周辺の不具合の可能性あり

Q. ANALOG AUX SND 1-6が出力されていない場合

A.「1. STEREO OUTが出力されない場合」参照

4. TDIF系（MTR SND 1-24、D I/O 1-16）が出力されない場合

■ MTR SND 1-16が出力されない場合

（DIRECT OUTにする）

Q. MTR SND 1-16メーターが振れない

A. MIX PCBのDSP_B1A－DSP_C1間の不具合の可能性あり

（BUSS OUTにする）

Q. MTR SND 1-16メーターが振れない

A. MIX PCBのDSP_C1－DSP_E間の不具合の可能性あり

→「1. STEREO OUTが出力されない場合」の「MTR SNDメーターが何も振れない場合」参照

■ MTR 17-24およびD I/O 1-16が出力されない場合

Q. MTR 17-24メーターは振れる

A. MIX PCBのDSP_E周辺の不具合の可能性あり

Q. MTR 17-24メーターが振れない

A. MIX PCBのDSP_C1, 2, 3－DSP_E間の不具合の可能性あり

→「1. STEREO OUTが出力されない場合」の「MTR SNDメーターが何も振れない場合」参照

The Error Messages here mostly point to a hardware problem

Error display format

Fatal Error
TT-EEEEEEEE-XX

TT: Section of program where error occured
EEEEEEEE:Error Code
XX : Other Information

Errors relating to DSP hardware

Task ID	Error code	Information	Problem	Possible Cause	Solution
40	00000001	00	An illegal command was received at the DSP driver.	The contents of the backed up SRAM have become garbled beyond use.	Perform an SRAM clear. Note the Library contents will also be cleared.
44	00000007	XX	A Verify error occured when writing to the DSP's CRAM (Internal Memory)	The CPU to DSP Interface is unstable, or the DSP is not working	Check the cables between the MAIN CPU PCB and the 2 DSP PCBs and between the 2 DSP boards
44	00000008	XX	A Verify error occured when writing to a DRAM on the DSP Board	The CPU to DSP Interface is unstable, or the DSP is not working	As Above
44	00000009	XX	A Timeout error occured while waiting to send data to a DSP	The CPU to DSP Interface is unstable	As Above
44	0000000a	XX	A Timeout error occured while waiting to update the DSP's coefficient data	As above	As Above
44	00000010	XX	The Chip select signal on the Module PCB is unstable	As above	As Above
44	00000011	XX	The Chip select signal on the Mix PCB is unstable	As above	As Above
45	0000000a	XX	A Timeout error occured while waiting to update the DSP's data memory	As above	As Above

Errors relating to CPU hardware

Task ID	Error code	Information	Problem	Possible Cause	Solution
00	00000000	00	The Panel CPU received an null command	The Main CPU is not working correctly	Check the Main CPU is correctly mounted and check the 2 cables connecting the Main and Panel PCBs
01	FFFFFF4B7	02	The Command Buffer in the Main CPU is full	The Serial interface inside the Main CPU is not working correctly	Check the cable in connector P7 on the Main CPU PCB is correctly inserted.
99	00000004	XX	Illegal Instruction error: The Main CPU attempted to execute a non-command	Memory access from the Main CPU is not working correctly.	Check the Flash RAM, DRAM, CPU for correct mounting and solder bridges
99	00000009	XX	Address error: The Main CPU attempted to read or write data to an illegal	As above	As above
30	FFFFF5BB	64	Error report from software	The Battery backed SRAM has been cleared (as requested by user)	Cycle power
PP	EEEEEEEE	XX	An Error occurred in the Panel CPU software	Comms between the Main and Panel CPU's is faulty, or there is some other problem with the Panel CPU	Check the 2 cables connecting the Main and Panel PCBs

ここで述べるエラーメッセージ対策とは、主にハードウェアが原因と思われるものについて説明します。

エラーメッセージの表示形式

Fatal Error	TT：エラーが発生したプログラム上のID
TT-EEEEEEEE-XX	EEEEEEEE:エラーコード
	XX：その他の情報

DSP周辺のエラーメッセージ

Task ID	Error code	Information	エラー現象	考えられる原因	対策
40	00000001	00	DSPにコマンドを送信する部分が無効なコマンドコードを受信	バックアップメモリの値が一部破壊されている	メモリの初期化（但しライブラリ等に保存されたデータも初期化されます）
44	00000007	XX	DSPの係数メモリでベリファイエラーが発生	CPU-DSPのI/Fが不安定。またはDSPが正常に動作していない。	MAIN CPU PCBと2枚のDSP PCB間の接続ケーブル及び、DSP PCB間の接続ケーブルが正しく挿入されているかを確認
44	00000008	XX	DSP PCB上のDRAMでベリファイエラーが発生	CPU-DSPのI/Fが不安定。またはDSPが正常に動作していない。	同上
44	00000009	XX	DSPのデータ送信準備待ちでタイムアウトした	CPU-DSPのI/Fが不安定。	同上
44	0000000a	XX	DSPのデータ係数アップデート待ちでタイムアウトした	同上	同上
44	00000010	XX	MODULE PCB上においてDSPのチップセレクト信号が異常	同上	同上
44	00000011	XX	MIX PCB上においてDSPのチップセレクト信号が異常	同上	同上
45	0000000a	XX	DSPのデータ係数アップデート待ちでタイムアウトした	同上	同上

CPU周辺のエラーメッセージ

Task ID	Error code	Information	エラー現象	考えられる原因	対策
00	00000000	00	PANEL CPUが無効なコマンドを受信	MAIN CPUが動作していない。	MAIN CPUが正しく実装されているかを確認。また2枚のCPU PCB間の接続ケーブルを確認が正しく挿入されているかを確認
01	FFFFFF4B7	02	MAIN CPUのコマンドバッファがFull	MAIN CPU内蔵のシリアル通信が正常に動作していない	MAIN CPU PCBのコネクタP7のケーブルが正しく挿入されているかを確認
99	00000004	XX	一般不当命令：MAIN CPUで未定義コードがデコードされた	MAIN CPUのメモリアクセスが正常に動作していない	Flash RAM、DRAM、CPUが正しく実装されているかを確認
99	00000009	XX	アドレスエラー：MAIN CPUがワードデータを奇数番地からアクセスした	同上	同上
30	FFFFF5BB	64	ソフトウェア内でのコマンド通信のエラー	電源投入時にバックアップメモリの初期化を行った(正常動作)	電源再投入
PP	EEEEEEEE	XX	PANEL CPU上でのエラー	MAIN、PANEL CPU間の通信が正常に動作していない。	2枚のCPU PCB間の接続ケーブルが正しく挿入されているかを確認

11. CHANGING THE OUTPUT LEVEL

出力レベルの変更

Analog Output Level (STEREO OUT, CR OUT, STUDIO OUT, SCOPE OUT) can be changed by the jumper wires on the MONITOR PCB.

Reference No. of jumper wire
W101, W151 : For L-channel of STEREO OUT
W201, W251 : For R-channel of STEREO OUT
W301, W351 : For L-channel of Monitor System Output
W401, W451 : For R-channel of Monitor System Output

アナログ出力（STEREO OUT, CR OUT, STUDIO OUT, SCOPE OUT）レベルは、MONITOR PCB上のジャンパー線の設定により変更が可能です。

ジャンパー線部番
W101, W151 : STEREO OUT Lch用
W201, W251 : STEREO OUT Rch用
W301, W351 : MONITOR系 OUT Lch用
W401, W451 : MONITOR系 OUT Rch用

●STEREO OUT (BALANCE), CR OUT, STUDIO OUT

JUMPER WIRES SETTING ジャンパー線設定		* PANEL SETTING PANEL設定	NOMINAL LEVEL 基準レベル	MAXIMUM LEVEL 最大レベル
W101～W401	W151～W451			
OPEN	OPEN	-20dBFS	+4dBu	+20dBu
OPEN	OPEN	-20dBFS	+4dBu	+24dBu
OPEN	SHORT	-20dBFS	+4dBu	+18dBu
SHORT	OPEN	-16dBFS	+6dBu	+15dBu

●STEREO OUT (BALANCE)

JUMPER WIRES SETTING ジャンパー線設定		* PANEL SETTING PANEL設定	NOMINAL LEVEL 基準レベル	MAXIMUM LEVEL 最大レベル
W101, W201	W151, W251			
OPEN	OPEN	-16dBFS	-10dBV	+6dBV
OPEN	OPEN	-20dBFS	-10dBV	+10dBV
OPEN	SHORT	-20dBFS	-10dBV	+4dBV
SHORT	OPEN	-16dBFS	-8dBV	+1dBV

●SCOPE OUT

JUMPER WIRES SETTING ジャンパー線設定		* PANEL SETTING PANEL設定	NOMINAL LEVEL 基準レベル	MAXIMUM LEVEL 最大レベル
W301, W401	W351, W451			
OPEN	OPEN	-16dBFS	-2dBV	+14dBu
OPEN	OPEN	-20dBFS	-2dBV	+18dBu
OPEN	SHORT	-20dBFS	-2dBV	+12dBu
SHORT	OPEN	-16dBFS	0dBV	+9dBu

＊PANEL SETTING :
Setting of ANALOG HEADROOM TYPE in the OPTION-SETUP window on the LCD screen.

Digital :-16dBFS = Analog : +4dBu
Digital : -20dBFS = Analog : +4dBu

＊PANEL設定：
LCDスクリーンのOPTION-SETUP画面における ANALOG HEADROOM TYPEの設定

Digital :-16dBFS = Analog : +4dBu
Digital : -20dBFS = Analog : +4dBu

MONITOR PCB

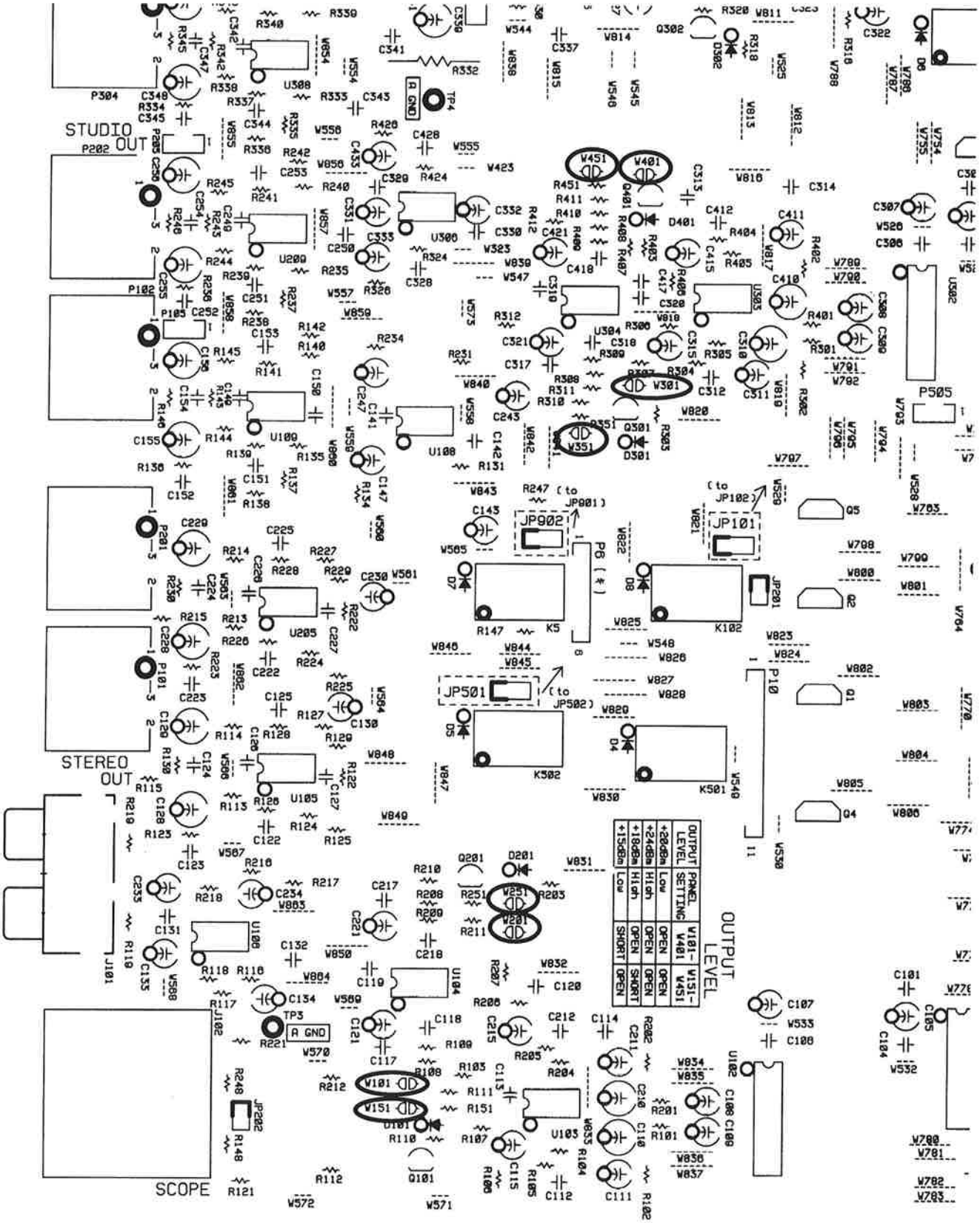
STUDIO OUT
STEREO OUT
SCOPE
OUTPUT LEVEL
OUTPUT LEVEL
PANEL SETTING
W101-W401
W151-W451
+20dBm
Low
OPEN
OPEN
+24dBm
High
OPEN
OPEN
+18dBm
High
OPEN
SHORT
+15dBm
Low
SHORT
OPEN
JP902
JP101
JP501
P505
P6 (*)
A GND

12. LIFE TIME OF CONSUMPTION PARTS

消耗部品の寿命一覧

Type	Function	Life	P/N	REMARKS
10*10,TACT SW	SELECT,SOLO,CUT etc.	500000cycles	53021044-00	SKHCAA
6*6,TACT SW	REC FUNCTION	500000cycles	53021044-00	SKHCAA
6.4*8.4,TACT SW	POD SW	500000cycles	53021098-00	SKHHDA
16*16,PUSH SW	REC,PLAY,STOP etc.	10000000cycles	53000594-00	SKFSAA
6*6,PUSH SW	LINE,PAD	10000cycles	E0003020	SPUJ20
6*6,PUSH SW	+48V	10000cycles	E0002820	SPUJ12
POWER SW	POWER	25000cycles	53000607-00	SDDLD1248A
Rotary ENCODER	POD	100000cycles	E0035890	ECB24104
Rotary ENCODER	JOG/SHUTTLE	50000cycles	E0000460	SRGPHJ
Rotary VR	INPUT TRIM	10000cycles	R0028290	EUVE2J 10KRD
Rotary VR	ST RTN TRIM	15000cycles	R006579-00A	EVJC20 20KRD*2
Rotary VR	CR,PHONE,STUDIO	15000cycles	R006584-00A	RK14K12D0 10KA*2
Rotary VR	COMMUNICATION	15000cycles	R006583-00A	RK11K1140 10KA
Rotary VR	SOLO	15000cycles	52820248-00	1S1UVR11 5KB
Rotary VR	LCD CONTRAST	5000cycles	R006580-00A	RK09K1130 10KB
Slide VR	Small FADER	30000cycles	R006581-00A	RS60N1119 5KB
Slide VR	Large FADER	30000cycles	R006580-00A	RSA0N1119 5KB
LCD Display	LCD	20000hours min	E0035900	LM320131

13. CIRCUIT DESCRIPTION
回路説明

MAIN CPU Hard Ware

① MAIN CPU
This is a 32 Bit RISC CPU used for total system control

② Flash RAM
The Program memory area for the MAIN CPU is made up of 2 Flash Memory devices, each of 4M size, making a total 256k×32 bit memory size. These are normally used as ROMs, but by utilizing the write facility of the chips, the main program can be updated without having to open the case and replace the devices physically.

③ Backup Data RAM
Using 2 devices of 1M size, a 128k×16 bit SRAM area is created for saving the TM-D8000's mixer parameters and library data. When the main power is off, the battery on the PCB keeps the SRAM data from being lost.

④ Data RAM
Using 2 devices of 4M bit size, a 256k×32 bit DRAM area is created for program data.

⑤ Dual Port RAM
This memory has a size of 256×16 and is read / writeable from both the Main CPU and Panel CPU. By using accesses from both sides of the RAM, commands are sent between the 2 CPUs.

⑥ DSP Host I/F
This section is used to download code and data into all of the DSPs, and to receive data from the DSPs. To send data to a DSP, the CPU selects a DSP and writes data, which is converted to serial format and sent to the DSP by this I/F. To read data from a DSP, the CPU first sends a command requesting data, then waits for the DSP to provide it, which is converted to parallel and placed into the I/F buffer register, which the CPU then reads.

⑦ IOX I/F
The Initialization of the Digital Audio Gate Arrays (IOX) on the DSP boards is performed by the CPU using this I/F.

⑧ Time Code Reader
A timecode signal which is connected from an external device is read by this device and the data is then read by the CPU.

⑨ Automation Host I/F
Using the serial Interface inside the CPU, communications with a host computer used for mixer Automation is carried out.

⑩ I/O Port
An 8 bit×9 bit port is present on each of the MODULE and MIX PCBs which are used to read the status of signals at the digital audio I/Fs and for providing DSP chip select signals.

MAIN CPU ハードウェア

① MAIN CPU
システム制御を行う32ビットRISC方式のCPUです。

② Flash RAM
MAIN CPUのプログラムで4MビットのFlash Memory2個により256k×32ビット構成となります。
通常はROM動作を行いますが、書き込み可能なメモリで外部からのプログラムダウンロードにより、チップ交換無しでソフトウェアのヴァージョンアップを行う事ができます。

③ Backup Data RAM
1MビットのSRAM2個により128k×16ビット構成でTM-D8000のライブラリパラメータ等を保持します。電源OFF後もPCB上の電池によりデータは保存されます。

④ Data RAM
4MビットのDRAM2個により256k×32ビット構成のデータメモリです。

⑤ Dual Port RAM
256×16ビット構成でPANEL CPUからも読み書き可能なメモリです。
このメモリをそれぞれのCPUがアクセスする事により、コマンドの送受信を行います。

⑥ DSP Host I/F
各DSPのプログラムのダウンロードや係数のアップデートまた、DSPからのデータを受信する部分です。
DSPにデータを送る場合、CPUはまず送信先のDSPを選択しデータの書き込みを行うと、シリアル変換されたデータがDSPに書き込まれます。
DSPからデータを受信する場合は、DSPに対してデータ要求のコマンドを送信しデータが準備されるのを待ちます。DSPよりシリアルで送信されたデータは、パラレル変換されバッファレジスタに用意されます。その後、CPUがバッファレジスタを読みに行く事でデータ受信が完了します。

⑦ IOX I/F
DSP PCB上のゲートアレイ、IOXの初期設定をMAIN CPUより行います。

⑧ Time Code Reader
外部より入力されたタイムコードをこのICでCPUが読み取れるデータに変換されます。

⑨ Automation Host I/F
CPU内部のシリアルインターフェースを用いる事により、オートメーション用ホストコンピュータとの通信を行います。

⑩ I/O Port
8ビット×9ポートがMODULE PCB、MIX PCBにあり、オーディオI/Fフォーマットの状態や設定、DSPのチップセレクト信号等がアサインされています。

MAIN CPU BLOCK

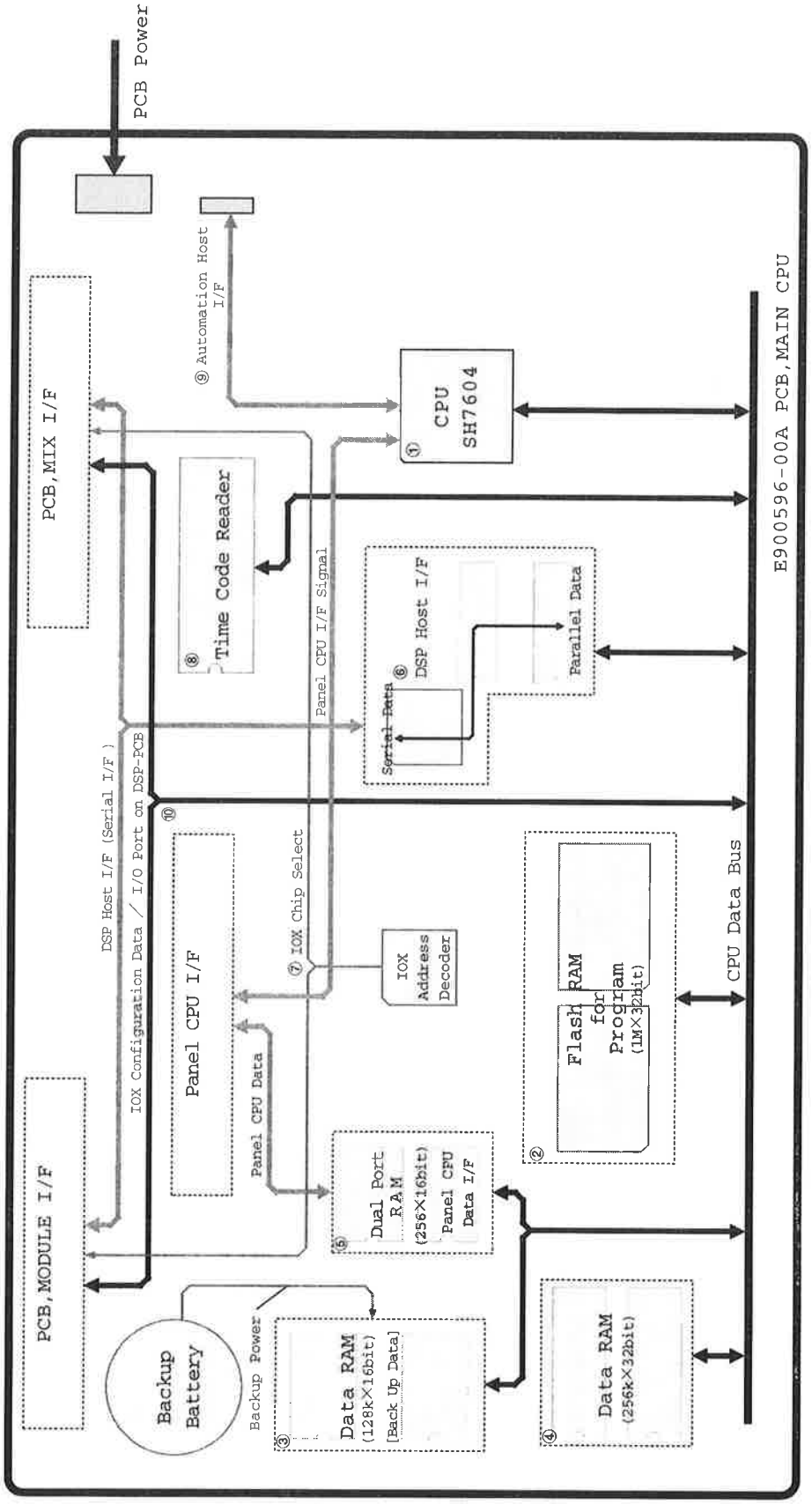

PANEL CPU Hard Ware

① PANEL CPU
This is a RISC type CPU primarily concerned with reading the status and movement of controls on the front panel, and driving the front panel LED and LCD displays.

② Flash RAM
The program memory for the Panel CPU is made up of a signal 4M bit Flash Memory, providing a 256k×16 memory space. It is normally used as a ROM, but by utilizing the write facility of the chip, the program code can be updated without having to open the case and replace the device physically.

③ Data RAM
The data memory for the Panel CPU is made up of 2 SRAM devices of 1M bit size, providing a 128k×16 memory space. Unlike the Main CPU SRAM, this memory is not protected by a battery during power down.

④ Dual Port RAM
The 256×16 bit Dual Port RAM actually resides on the MAIN CPU PCB, but is accessible from both the MAIN and PANEL CPUs to provide space for command and data transfer between the two CPUs.

⑤ LCD Controller
This device takes the data written into the LCD data RAM and sends it serially to the LCD display. Initialization and control is from the PANEL CPU.

⑥ LCD Data RAM
Using 2 SRAM devices of 256k bit size, a 64k×16 size memory area is made for LCD display data. This memory is accessible from both the PANEL CPU and the LCD Controller.

⑦ I/O Port
By using a Port Expander IC, a 16 bit×9 I/O port area is available to the PANEL CPU. This connects the CPU to the Switch Matrix (24×16 bit) and the LED matrix (64 bit×16). Both are serviced by a dynamic scanning method. The remaining ports provide flags between the 2 CPUs and control of external devices.

⑧ LED Driver
This provides the driver current for the LED display with data from the I/O ports.

⑨ Pulse Counter
By using a 8 bit dual phase up/down counter, one per pod, the 20 POD controls on the front panel can be read. When the CPU reads the counter value, it is automatically reset, allowing the CPU to determine the change in position since the last reading.

⑩ Fader Selector
The 53 Faders, Solo Volume control and the Battery voltage from the MAIN CPU PCB are read by the A/D converter inside the PANEL CPU. The CPU has only 8 parallel inputs, so the total 55 signals are divided by this analog switch section and presented to the CPU in turn to be read. The CPU controls which set of signals are input at any one time.

⑪ Serial I/F
The 2 Serial Interfaces internal to the CPU are used for communications with external devices. CH0 is used to drive devices connected to the REMOTE and RS-422 ports, and CH1 is used to drive the MIDI ports.

PANEL CPU ハードウェア

① PANEL CPU
主にパネル面上の操作子の制御を行うRISC方式のCPUです。

② Flash RAM
PANEL CPUのプログラムメモリで4MビットのFlash Memory1個により256k×16ビット構成となります。
通常はROM動作を行いますが、書き込み可能なメモリで外部からのプログラムダウンロードによりチップ交換無しでソフトウェアのヴァージョンアップを行う事ができます。

③ Data RAM
1MビットのSRAM2個により128k×16ビット構成のデータメモリです。
但し、このメモリ上のデータは電源OFFのとき保存されません。

④ Dual Port RAM
MAIN CPU PCB上にある256×16ビット構成のメモリで、MAIN CPUからもアクセス可能です。
このメモリをそれぞれのCPUがアクセスする事により、コマンドの送受信を行います。

⑤ LCD Controller
LCDデータRAMに書かれたデータをLCDに転送しLCDに表示します。
初期設定、制御はPANEL CPUより行います。

⑥ LCD Data RAM
256kビットのSRAMを2個使用し、64k×16ビットLCD用画像データメモリです。
CPU、LCDコントローラ双方からのアクセスが可能です。

⑦ I/O Port
拡張ポートICにより、16ビット×9のI/Oポートです。
パネル面上のスイッチを24×16ビットのマトリックス構成により読み取ります。
又、パネル面上のLEDを1/16デューティ、64ビットポートのダイナミクス点灯の表示用ポートとなります。その他、MAIN CPUとの汎用フラグ、外部機器との通信のコントロール信号等がアサインされています。

⑧ LED Driver
I/OポートのLED表示データにLED点灯可能な電流を与えます。

⑨ Pulse Counter
8ビットの二相アップダウンカウンタ20個により、パネル面上の20個のポッドの値を読み込みます。
CPUが値を読み込むとカウンタは自動的にリセットされますので、CPUにはポッドの前回の値からの相対値が読み込まれます。

⑩ Fader Selector
53本のフェーダ、ソロヴォリューム、MAIN CPU PCB上のメモリバックアップ用電池の電圧をCPU内蔵のA/Dコンバータで読み取ります。
CPU内蔵のA/Dコンバータは8入力なので、55系統のアナログ入力をCPUがアナログスイッチで順次選択し電圧値を読み取ります。

⑪ Serial I/F
CPU内蔵の2系統のシリアルインターフェース用いて外部との通信を行います。
ch0はREMOTEもしくはRS-422端子に接続される制御機器との通信に、ch1はMIDI機器との通信に使用されます。

PANEL CPU BLOCK

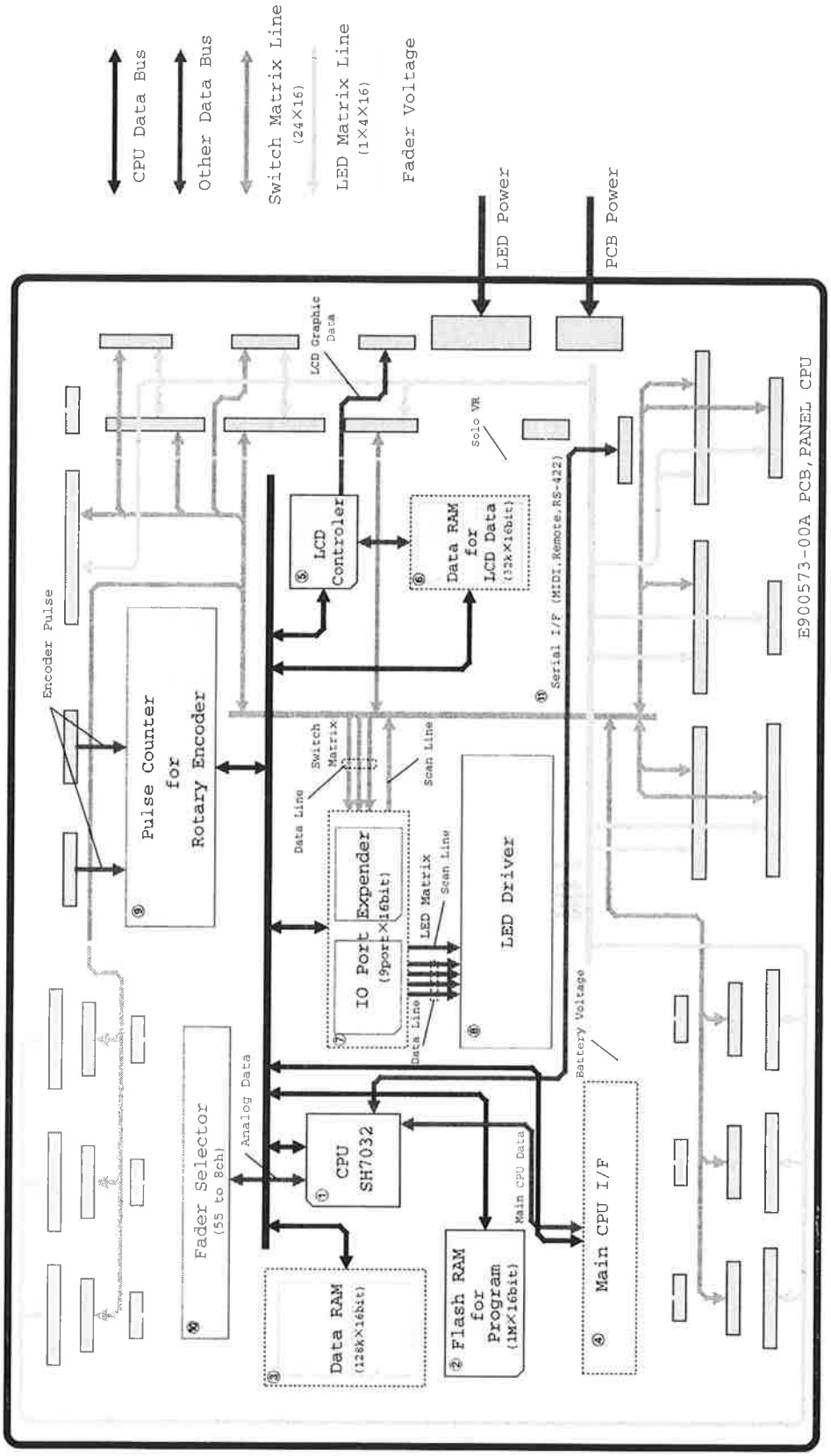

Switch Matrix

Retun Line		Supply															
		SWSCN0	SWSCN1	SWSCN2	SWSCN3	SWSCN4	SWSCN5	SWSCN6	SWSCN7	SWSCN8	SWSCN9	SWSCN10	SWSCN11	SWSCN12	SWSCN13	SWSCN14	SWSCN15
SWRTN	0	SEL S-1	SOLO S-1	CUT S-1	SEL L-1	SOLO L-1	CUT L-1	REC_FUNC.1	REC_FUNC.5	REC_FUNC.9	REC_FUNC.13	REC_FUNC.17	REC_FUNC.21	SEL CUT_Gr.1	CUT CUT_Gr.1	SEL FADER_Gr.1	SOLO FADER_Gr.1
	1	SEL S-2	SOLO S-2	CUT S-2	SEL L-2	SOLO L-2	CUT L-2	REC_FUNC.2	REC_FUNC.6	REC_FUNC.10	REC_FUNC.14	REC_FUNC.18	REC_FUNC.22	SEL CUT_Gr.2	CUT CUT_Gr.2	SEL FADER_Gr.2	SOLO FADER_Gr.2
	2	SEL S-3	SOLO S-3	CUT S-3	SEL L-3	SOLO L-3	CUT L-3	REC_FUNC.3	REC_FUNC.7	REC_FUNC.11	REC_FUNC.15	REC_FUNC.19	REC_FUNC.23	SEL CUT_Gr.3	CUT CUT_Gr.3	SEL FADER_Gr.3	SOLO FADER_Gr.3
	3	SEL S-4	SOLO S-4	CUT S-4	SEL L-4	SOLO L-4	CUT L-4	REC_FUNC.4	REC_FUNC.8	REC_FUNC.12	REC_FUNC.16	REC_FUNC.20	REC_FUNC.24	SEL CUT_Gr.4	CUT CUT_Gr.4	SEL FADER_Gr.4	SOLO FADER_Gr.4
	4	SEL S-5	SOLO S-5	CUT S-5	SEL L-5	SOLO L-5	CUT L-5	MODULE	MASTER	DYNAMICS	EX.MIDI	SHIFT	INC +	DIMMER	CR	SEL STEREO	
	5	SEL S-6	SOLO S-6	CUT S-6	SEL L-6	SOLO L-6	CUT L-6	PADϕ	FDR POS.	AUX1	AUX2	SNAP LIB	RECALL	STUDIO	SLATE		
	6	SEL S-7	SOLO S-7	CUT S-7	SEL L-7	SOLO L-7	CUT L-7	PAN/BAL		AUX3	AUX4	EQ LIB	DEC -		AUX1-2		
	7	SEL S-8	SOLO S-8	CUT S-8	SEL L-8	SOLO L-8	CUT L-8	ASSIGN		AUX5	AUX6	DYN LIB	STORE				
	8	SEL S-9	SOLO S-9	CUT S-9	SEL L-9	SOLO L-9	CUT L-9	CR 2TR-1	CR D_IN-1	CR AUX-1	CR AUX-4			ten key 0	ten key 1	ten key 4	ten key 7
	9	SEL S-10	SOLO S-10	CUT S-10	SEL L-10	SOLO L-10	CUT L-10	CR 2TR-2	CR D_IN-2	CR AUX-2	CR AUX-5			ten key ±	ten key 2	ten key 5	ten key 8
	10	SEL S-11	SOLO S-11	CUT S-11	SEL L-11	SOLO L-11	CUT L-11	CR STEREO	CR D_IN-3	CR AUX-3	CR AUX-6			ten key ENT	ten key 3	ten key 6	ten key 9
	11	SEL S-12	SOLO S-12	CUT S-12	SEL L-12	SOLO L-12	CUT L-12		CR D_IN-4	INPLACE	CR MONO			CLEAR		AUTO MON	MANUAL LOC
	12	SEL S-13	SOLO S-13	CUT S-13	SEL L-13	SOLO L-13	CUT L-13	LOC1	LOC2	LOC3	LOC4	LOC5	MEMO	AUTO IN/OUT	AT.MANUAL	ALL INPUT	
	13	SEL S-14	SOLO S-14	CUT S-14	SEL L-14	SOLO L-14	CUT L-14	LOC6	LOC7	LOC8	LOC9	LOC10	EDIT	RHSL	AT.READ		
	14	SEL S-15	SOLO S-15	CUT S-15	SEL L-15	SOLO L-15	CUT L-15	REW	F	STOP	PLAY	REC	REPEAT	AT.NULL	AT.UPDATE	WE.CUT	
	15	SEL S-16	SOLO S-16	CUT S-16	SEL L-16	SOLO L-16	CUT L-16	JOG/SHTL	csr ←	csr ↓	csr ↑	csr →	ENTER	AT.ALL SEL	AT.WRITE	WE.FADER	
	16	SEL S-17	SOLO S-17	CUT S-17	SEL L-17	SOLO L-17	CUT L-17	POD4 L	POD8 L	POD12 L	POD16 L	RTN/SEND					
	17	SEL S-18	SOLO S-18	CUT S-18	SEL L-18	SOLO L-18	CUT L-18	POD4 R	POD8 R	POD12 R	POD16 R	EQ					
	18	SEL S-19	SOLO S-19	CUT S-19	SEL L-19	SOLO L-19	CUT L-19	POD5 L	POD9 L	POD13 L	POD17 L	INS/DYN					
	19	SEL S-20	SOLO S-20	CUT S-20	SEL L-20	SOLO L-20	CUT L-20	POD5 R	POD9 R	POD13 R	POD17 R	BUSS1	BUSS2				
	20	SEL S-21	SOLO S-21	CUT S-21	SEL L-21	SOLO L-21	CUT L-21	POD6 L	POD10 L	POD14 L	POD18 L	BUSS3	BUSS4	ALL SAFE			
	21	SEL S-22	SOLO S-22	CUT S-22	SEL L-22	SOLO L-22	CUT L-22	POD6 R	POD10 R	POD14 R	POD18 R	BUSS5	BUSS6	L.FADER	S.FADER		
	22	SEL S-23	SOLO S-23	CUT S-23	SEL L-23	SOLO L-23	CUT L-23	POD7 L	POD11 L	POD15 L	POD19 L	BUSS7	BUSS8	MTR SEND	AUX SEND		
	23	SEL S-24	SOLO S-24	CUT S-24	SEL L-24	SOLO L-24	CUT L-24	POD7 R	POD11 R	POD15 R	POD19 R	STEREO	DIRECT	MTR RTN	CH/ST RTN		
		SWSCN0	SWSCN1	SWSCN2	SWSCN3	SWSCN4	SWSCN5	SWSCN6	SWSCN7	SWSCN8	SWSCN9	SWSCN10	SWSCN11	SWSCN12	SWSCN13	SWSCN14	SWSCN15

LED Matrix (1)

DATA		Supply															
		SPLY0	SPLY1	SPLY2	SPLY3	SPLY4	SPLY5	SPLY6	SPLY7	SPLY8	SPLY9	SPLY10	SPLY11	SPLY12	SPLY13	SPLY14	SPLY15
IND0D	0	Meter1-0	Meter2-0	Meter3-0	Meter4-0	Meter5-0	Meter6-0	Meter7-0	Meter8-0	Meter9-0	Meter10-0	Meter11-0	Meter12-0	Meter13-0	Meter14-0	Meter15-0	Meter16-0
	1	Meter1-1	Meter2-1	Meter3-1	Meter4-1	Meter5-1	Meter6-1	Meter7-1	Meter8-1	Meter9-1	Meter10-1	Meter11-1	Meter12-1	Meter13-1	Meter14-1	Meter15-1	Meter16-1
	2	Meter1-2	Meter2-2	Meter3-2	Meter4-2	Meter5-2	Meter6-2	Meter7-2	Meter8-2	Meter9-2	Meter10-2	Meter11-2	Meter12-2	Meter13-2	Meter14-2	Meter15-2	Meter16-2
	3	Meter1-3	Meter2-3	Meter3-3	Meter4-3	Meter5-3	Meter6-3	Meter7-3	Meter8-3	Meter9-3	Meter10-3	Meter11-3	Meter12-3	Meter13-3	Meter14-3	Meter15-3	Meter16-3
	4	Meter1-4	Meter2-4	Meter3-4	Meter4-4	Meter5-4	Meter6-4	Meter7-4	Meter8-4	Meter9-4	Meter10-4	Meter11-4	Meter12-4	Meter13-4	Meter14-4	Meter15-4	Meter16-4
	5	Meter1-5	Meter2-5	Meter3-5	Meter4-5	Meter5-5	Meter6-5	Meter7-5	Meter8-5	Meter9-5	Meter10-5	Meter11-5	Meter12-5	Meter13-5	Meter14-5	Meter15-5	Meter16-5
	6	Meter1-6	Meter2-6	Meter3-6	Meter4-6	Meter5-6	Meter6-6	Meter7-6	Meter8-6	Meter9-6	Meter10-6	Meter11-6	Meter12-6	Meter13-6	Meter14-6	Meter15-6	Meter16-6
	7	Meter1-7	Meter2-7	Meter3-7	Meter4-7	Meter5-7	Meter6-7	Meter7-7	Meter8-7	Meter9-7	Meter10-7	Meter11-7	Meter12-7	Meter13-7	Meter14-7	Meter15-7	Meter16-7
	8	Meter1-8	Meter2-8	Meter3-8	Meter4-8	Meter5-8	Meter6-8	Meter7-8	Meter8-8	Meter9-8	Meter10-8	Meter11-8	Meter12-8	Meter13-8	Meter14-8	Meter15-8	Meter16-8
	9	Meter1-9	Meter2-9	Meter3-9	Meter4-9	Meter5-9	Meter6-9	Meter7-9	Meter8-9	Meter9-9	Meter10-9	Meter11-9	Meter12-9	Meter13-9	Meter14-9	Meter15-9	Meter16-9
	10	Meter1-10	Meter2-10	Meter3-10	Meter4-10	Meter5-10	Meter6-10	Meter7-10	Meter8-10	Meter9-10	Meter10-10	Meter11-10	Meter12-10	Meter13-10	Meter14-10	Meter15-10	Meter16-10
	11	Meter1-11	Meter2-11	Meter3-11	Meter4-11	Meter5-11	Meter6-11	Meter7-11	Meter8-11	Meter9-11	Meter10-11	Meter11-11	Meter12-11	Meter13-11	Meter14-11	Meter15-11	Meter16-11
	12	Meter1-12	Meter2-12	Meter3-12	Meter4-12	Meter5-12	Meter6-12	Meter7-12	Meter8-12	Meter9-12	Meter10-12	Meter11-12	Meter12-12	Meter13-12	Meter14-12	Meter15-12	Meter16-12
	13	Meter1-13	Meter2-13	Meter3-13	Meter4-13	Meter5-13	Meter6-13	Meter7-13	Meter8-13	Meter9-13	Meter10-13	Meter11-13	Meter12-13	Meter13-13	Meter14-13	Meter15-13	Meter16-13
	14	Meter1-14	Meter2-14	Meter3-14	Meter4-14	Meter5-14	Meter6-14	Meter7-14	Meter8-14	Meter9-14	Meter10-14	Meter11-14	Meter12-14	Meter13-14	Meter14-14	Meter15-14	Meter16-14
	15	REC_FUNC1	REC_FUNC2	REC_FUNC3	REC_FUNC4	REC_FUNC5	REC_FUNC6	REC_FUNC7	REC_FUNC8	REC_FUNC9	REC_FUNC10	REC_FUNC11	REC_FUNC12	REC_FUNC13	REC_FUNC14	REC_FUNC15	REC_FUNC16
IND1D	0	Meter17-0	Meter18-0	Meter19-0	Meter20-0	Meter21-0	Meter22-0	Meter23-0	Meter24-0			Meter L-0	Meter L-16	Meter R-0	Meter R-16	ALL SAFE	LOC
	1	Meter17-1	Meter18-1	Meter19-1	Meter20-1	Meter21-1	Meter22-1	Meter23-1	Meter24-1			Meter L-1	Meter L-17	Meter R-1	Meter R-17	L FADER	TC
	2	Meter17-2	Meter18-2	Meter19-2	Meter20-2	Meter21-2	Meter22-2	Meter23-2	Meter24-2			Meter L-2	Meter L-18	Meter R-2	Meter R-18	S FADER	TDIF
	3	Meter17-3	Meter18-3	Meter19-3	Meter20-3	Meter21-3	Meter22-3	Meter23-3	Meter24-3			Meter L-3	Meter L-19	Meter R-3	Meter R-19	MTR SEND	D in
	4	Meter17-4	Meter18-4	Meter19-4	Meter20-4	Meter21-4	Meter22-4	Meter23-4	Meter24-4			Meter L-4	Meter L-20	Meter R-4	Meter R-20	AUX SEND	VIDEO
	5	Meter17-5	Meter18-5	Meter19-5	Meter20-5	Meter21-5	Meter22-5	Meter23-5	Meter24-5			Meter L-5	Meter L-21	Meter R-5	Meter R-21	POST EQ	WORD
	6	Meter17-6	Meter18-6	Meter19-6	Meter20-6	Meter21-6	Meter22-6	Meter23-6	Meter24-6			Meter L-6	Meter L-22	Meter R-6	Meter R-22	MTR RTN	INT
	7	Meter17-7	Meter18-7	Meter19-7	Meter20-7	Meter21-7	Meter22-7	Meter23-7	Meter24-7			Meter L-7	Meter L-23	Meter R-7	Meter R-23	CH/ST RTN	48kHz
	8	Meter17-8	Meter18-8	Meter19-8	Meter20-8	Meter21-8	Meter22-8	Meter23-8	Meter24-8			Meter L-8	Meter L-24	Meter R-8	Meter R-24	-20dB	44.1kHz
	9	Meter17-9	Meter18-9	Meter19-9	Meter20-9	Meter21-9	Meter22-9	Meter23-9	Meter24-9			Meter L-9	Meter L-25	Meter R-9	Meter R-25	-16dB	SWAP
	10	Meter17-10	Meter18-10	Meter19-10	Meter20-10	Meter21-10	Meter22-10	Meter23-10	Meter24-10			Meter L-10	Meter L-26	Meter R-10	Meter R-26		
	11	Meter17-11	Meter18-11	Meter19-11	Meter20-11	Meter21-11	Meter22-11	Meter23-11	Meter24-11			Meter L-11	Meter L-27	Meter R-11	Meter R-27		
	12	Meter17-12	Meter18-12	Meter19-12	Meter20-12	Meter21-12	Meter22-12	Meter23-12	Meter24-12			Meter L-12	Meter L-28	Meter R-12	Meter R-28		
	13	Meter17-13	Meter18-13	Meter19-13	Meter20-13	Meter21-13	Meter22-13	Meter23-13	Meter24-13			Meter L-13	Meter L-29	Meter R-13	Meter R-29		
	14	Meter17-14	Meter18-14	Meter19-14	Meter20-14	Meter21-14	Meter22-14	Meter23-14	Meter24-14			Meter L-14		Meter R-14			
	15	REC_FUNC 17	REC_FUNC18	REC_FUNC19	REC_FUNC20	REC_FUNC21	REC_FUNC22	REC_FUNC23	REC_FUNC24			Meter L-15	Meter L-30	Meter R-15	Meter R-30		
		SPLY0	SPLY1	SPLY2	SPLY3	SPLY4	SPLY5	SPLY6	SPLY7	SPLY8	SPLY9	SPLY10	SPLY11	SPLY12	SPLY13	SPLY14	SPLY15

LED Matrix (2)

DATA		Supply															
		SPLY0	SPLY1	SPLY2	SPLY3	SPLY4	SPLY5	SPLY6	SPLY7	SPLY8	SPLY9	SPLY10	SPLY11	SPLY12	SPLY13	SPLY14	SPLY15
IND2D	0	CUT S-1	CUT S-5	CUT S-9	CUT S-13	CUT S-17	CUT S-21	CUT L-1	CUT L-5	CUT L-9	CUT L-13	CUT L-17	CUT L-21	TC:h-A	TC:m-A	TC:s-A	TC:f-A
	1	CUT S-2	CUT S-6	CUT S-10	CUT S-14	CUT S-18	CUT S-22	CUT L-2	CUT L-6	CUT L-10	CUT L-14	CUT L-18	CUT L-22	TC:h-B	TC:m-B	TC:s-B	TC:f-B
	2	CUT S-3	CUT S-7	CUT S-11	CUT S-15	CUT S-19	CUT S-23	CUT L-3	CUT L-7	CUT L-11	CUT L-15	CUT L-19	CUT L-23	TC:h-C	TC:m-C	TC:s-C	TC:f-C
	3	CUT S-4	CUT S-8	CUT S-12	CUT S-16	CUT S-20	CUT S-24	CUT L-4	CUT L-8	CUT L-12	CUT L-16	CUT L-20	CUT L-24	TC:h-D	TC:m-D	TC:s-D	TC:f-D
	4	UPDATE S-1	UPDATE S-5	UPDATE S-9	UPDATE S-13	UPDATE S-17	UPDATE S-21	UPDATE L-1	UPDATE L-5	UPDATE L-9	UPDATE L-13	UPDATE L-17	UPDATE L-21	TC:h-E	TC:m-E	TC:s-E	TC:f-E
	5	UPDATE S-2	UPDATE S-6	UPDATE S-10	UPDATE S-14	UPDATE S-18	UPDATE S-22	UPDATE L-2	UPDATE L-6	UPDATE L-10	UPDATE L-14	UPDATE L-18	UPDATE L-22	TC:h-F	TC:m-F	TC:s-F	TC:f-F
	6	UPDATE S-3	UPDATE S-7	UPDATE S-11	UPDATE S-15	UPDATE S-19	UPDATE S-23	UPDATE L-3	UPDATE L-7	UPDATE L-11	UPDATE L-15	UPDATE L-19	UPDATE L-23	TC:h-G	TC:m-G	TC:s-G	TC:f-G
	7	UPDATE S-4	UPDATE S-8	UPDATE S-12	UPDATE S-16	UPDATE S-20	UPDATE S-24	UPDATE L-4	UPDATE L-8	UPDATE L-12	UPDATE L-16	UPDATE L-20	UPDATE L-24	TC:h-DOT	TC:m-DOT	TC:s-DOT	TC:f-DOT
	8					CUT CUT_Gr.1	CUT CUT_Gr.3	UPDATE FADER_Gr.1	UPDATE FADER_Gr.3	UPDATE STEREO				TC:10h-A	TC:10m-A	TC:10s-A	TC:10f-A
	9					CUT CUT_Gr.2	CUT CUT_Gr.4	UPDATE FADER_Gr.2	UPDATE FADER_Gr.4	CR	CR AUX-1	CR 2TR-1		TC:10h-B	TC:10m-B	TC:10s-B	TC:10f-B
	10					UPDATE CUT_Gr.1	UPDATE CUT_Gr.3			SLATE	CR AUX-2	CR 2TR-2		TC:10h-C	TC:10m-C	TC:10s-C	TC:10f-C
	11					UPDATE CUT_Gr.2	UPDATE CUT_Gr.4			AUX1-2	CR AUX-3	CR D_IN-4		TC:10h-D	TC:10m-D	TC:10s-D	TC:10f-D
	12	SHIFT		JOG/SHTL	ALL INPUT	AUTO MON	LOC1	LOC2	LOC7	STUDIO	CR AUX-4	CR D_IN-1		TC:10h-E	TC:10m-E	TC:10s-E	TC:10f-E
	13	SNAP LIB		REW	AT UPDATE	RHSL	LOC6	LOC3	LOC8		CR AUX-5	CR D_IN-2		TC:10h-F	TC:10m-F	TC:10s-F	TC:10f-F
	14	EQ LIB		FF	WE FADER	AUTO IN/OUT	EDIT	LOC4	LOC9		CR AUX-6	CR D_IN-3		TC:10h-G	TC:10m-G	TC:10s-G	TC:10f-G
	15	DYN LIB		STOP	WE CUT	MANUAL LOC	MEMO	LOC5	LOC10	REPEAT	CR MONO	CR STEREO		TC:10h-DOT	TC:10m-DOT	TC:10s-DOT	TC:10f-DOT
IND3D	0	SEL S-1	SEL S-5	SEL S-9	SEL S-13	SEL S-17	SEL S-21	SEL L-1	SEL L-5	SEL L-9	SEL L-13	SEL L-17	SEL L-21	POD-0 EN	POD-1 EN	POD-2 EN	POD-3 EN
	1	SEL S-2	SEL S-6	SEL S-10	SEL S-14	SEL S-18	SEL S-22	SEL L-2	SEL L-6	SEL L-10	SEL L-14	SEL L-18	SEL L-22	POD-4 EN	POD-5 EN	POD-6 EN	POD-7 EN
	2	SEL S-3	SEL S-7	SEL S-11	SEL S-15	SEL S-19	SEL S-23	SEL L-3	SEL L-7	SEL L-11	SEL L-15	SEL L-19	SEL L-23	POD-8 EN	POD-9 EN	POD-10 EN	POD-11 EN
	3	SEL S-4	SEL S-8	SEL S-12	SEL S-16	SEL S-20	SEL S-24	SEL L-4	SEL L-8	SEL L-12	SEL L-16	SEL L-20	SEL L-24	POD-12 EN	POD-13 EN	POD-14 EN	POD-15 EN
	4			PLAY	AT READ	SEL CUT_Gr.1	SEL CUT_Gr.3	SEL FADER_Gr.1	SEL FADER_Gr.3	SEL STEREO				POD-16 EN	POD-17 EN	POD-18 EN	POD-19 EN
	5				AT MANUAL	SEL CUT_Gr.2	SEL CUT_Gr.4	SEL FADER_Gr.2	SEL FADER_Gr.4					ASSIGN EN			
	6			REC	AT WRITE	WR CUT_Gr.1	WR CUT_Gr.3	WR FADER_Gr.1	WR FADER_Gr.3	WR STEREO	PFL	SOLO FADER_Gr.1	SOLO FADER_Gr.3				
	7				AT NULL	WR CUT_Gr.2	WR CUT_Gr.4	WR FADER_Gr.2	WR FADER_Gr.4	DIMMER	INPLACE	SOLO FADER_Gr.2	SOLO FADER_Gr.4				
	8	SOLO S-1	SOLO S-5	SOLO S-9	SOLO S-13	SOLO S-17	SOLO S-21	SOLO L-1	SOLO L-5	SOLO L-9	SOLO L-13	SOLO L-17	SOLO L-21				
	9	SOLO S-2	SOLO S-6	SOLO S-10	SOLO S-14	SOLO S-18	SOLO S-22	SOLO L-2	SOLO L-6	SOLO L-10	SOLO L-14	SOLO L-18	SOLO L-22				
	10	SOLO S-3	SOLO S-7	SOLO S-11	SOLO S-15	SOLO S-19	SOLO S-23	SOLO L-3	SOLO L-7	SOLO L-11	SOLO L-15	SOLO L-19	SOLO L-23				
	11	SOLO S-4	SOLO S-8	SOLO S-12	SOLO S-16	SOLO S-20	SOLO S-24	SOLO L-4	SOLO L-8	SOLO L-12	SOLO L-16	SOLO L-20	SOLO L-24				
	12	WR S-1	WR S-5	WR S-9	WR S-13	WR S-17	WR S-21	WR L-1	WR L-5	WR L-9	WR L-13	WR L-17	WR L-21				
	13	WR S-2	WR S-6	WR S-10	WR S-14	WR S-18	WR S-22	WR L-2	WR L-6	WR L-10	WR L-14	WR L-18	WR L-22				
	14	WR S-3	WR S-7	WR S-11	WR S-15	WR S-19	WR S-23	WR L-3	WR L-7	WR L-11	WR L-15	WR L-19	WR L-23				
	15	WR S-4	WR S-8	WR S-12	WR S-16	WR S-20	WR S-24	WR L-4	WR L-8	WR L-12	WR L-16	WR L-20	WR L-24				
		SPLY0	SPLY1	SPLY2	SPLY3	SPLY4	SPLY5	SPLY6	SPLY7	SPLY8	SPLY9	SPLY10	SPLY11	SPLY12	SPLY13	SPLY14	SPLY15

Fader Matrix

ANALOG INPUT		AN0	AN1	AN2	AN3	AN4	AN5	AN6	AN7
Select No.	000	S-Fader1	S-Fader2	S-Fader3	S-Fader4	L-Fader9	L-Fader10	L-Fader11	L-Fader12
	001	S-Fader5	S-Fader6	S-Fader7	S-Fader8	L-Fader13	L-Fader14	L-Fader15	L-Fader16
	010	S-Fader9	S-Fader10	S-Fader11	S-Fader12	L-Fader17	L-Fader18	L-Fader19	L-Fader20
	011	S-Fader13	S-Fader14	S-Fader15	S-Fader16	L-Fader21	L-Fader22	L-Fader23	L-Fader24
	100	S-Fader17	S-Fader18	S-Fader19	S-Fader20	Gr-Fader1	Gr-Fader1		
	101	S-Fader21	S-Fader22	S-Fader23	S-Fader24	Gr-Fader1	Gr-Fader1		
	110	L-Fader1	L-Fader2	L-Fader3	L-Fader4	ST-Fader	SOLO-VR		
	111	L-Fader5	L-Fader6	L-Fader7	L-Fader8	Battery			

Processing of Digital Signal

1. Preface

TM-D8000 processes various signals required for mixing functions using DSP processors divided into each stage. For this processing, TM-D8000 adopts 15 pieces of TMS57070CF and 20 pieces of Input Expander IC (IOX). The TMS57070CF is a Texas Instrument made 24 bits fixed decimal point audio use processor.

Principle Function of the DSP
* Harvard Architecture of four independent buses i.e. Address, Coefficient, Data, and General
* 25 bits ALU, 52 bits MAC
* Two pieces On Chip Data Bank are accessible concurrently.
* Data, Coefficient Memory (256 words, 24 bits), Program Memory (512 words, 32 bits)
* 4 channel input + 6 channel output Serial Audio Interface
* 8 bits Serial Host Interface with Handshake
* 16 location 24 bits External I/O
* One command in 40 nsec

Principle function of IOX
* 16 channel TDIF-1 Serial Input
* 24 bits parallel buss Read/Write
* 16 channel TDIF-1 Serial Output

Generally, a digital audio mixer has to handle large number of input signal, and the audio interface capability provided with limited number of DSP is not sufficient for that handling. To solve that problem, numbers of input expander IC (IOX) developed specially for this DSP are adopted.
The IOX works in the following order.
1) Receives TDIF-1 signal of 16 channels first.
2) Converts that serial data received into parallel data.
3) Reads them at the I/O of DSP, process them with the same DSP.
4) Write result of 3) processing in parallel state into the IOX.
5) The IOX then converts result of 4) into TDIF-1 signal of 16 channels.

The DSP can accept data of four pieces IOX maximum, therefore, input/output data of 72 channels maximum can be processed with one DSP.

Distribution of signals to be processed at each DSP

As has been mentioned above, number of input can be increased by adopting IOX. At the same time, however, handling of read/write from that IOX, work out of filtering arose on ALU and MAC arithmetics, mix of bus, build up of meter level and peak data has to be carried out. To do this, step of various command has to be established, and this can not be attained with only one DSP.
Hence, block configuration of signal processing for TM-D8000 is designed by considering numbers of input/output and the way of distributing them under the optimum conditions. In this context, such policy of designing signal flow in an ordinary analogue circuit i.e. from one stage to the following stage simply cannot always be applicable.
This text will give a basic knowledge on how to understand processing of digital signal, and explain the nature of signal processing on each DSP of TM-D8000 with various tables and figures. Hope you could grasp the total image of digital signal processing in TM-D-8000 by referring this text.

デジタル信号処理

1. まえがき

TM-D8000は、TEXAS INSTRUMENT社製のオーディオ用24bit固定小数点ＤＳＰ TMS57070CFを１５個と入出力拡張用ＩＣ（ＩＯＸ）を２０個を使用して、ミキサー機能に必要な各信号処理を各ＤＳＰで分割して処理をしています。

ＤＳＰの主な機能
- Address, Coefficient, Data, Generalの４つのバスが独立したハーバード・アーキテクチャ
- 25 bit ALU（論理演算ユニット）、52 bitのMAC積和演算ユニット
- ２個のOn Chip Data bankの同時アクセス
- Data, Coefficient Memory (256 words*24 bit), Program Memory (512 words*32 bit)
- 4 channel Input + 6 channel Output Serial Audio Interface
- 8 bit Serial Host Interface With Handshake
- 16 Location 24 bit External I/O
- １命令 40ns

ＩＯＸの主な機能
- 16 channel TDIF-1 serial Input
- 24 bit parallel buss Read/Write
- 16 channel TDIF-1 serial Output

ディジタル・ミキサーの場合、必要となる入力信号の数が多くＤＳＰの持っているオーディオ・インターフェスだけでは不足しますので、このＤＳＰ専用に開発した入出力拡張用ＩＣ（ＩＯＸ）を使用しています。ＩＯＸの動作概容としては、入力１６チャネルのTDIF-1信号をＩＯＸで受信して、パラレル・データに変換し、ＤＳＰのI/Oで読み出し、ＤＳＰ内での信号処理を行った後、再びＤＳＰからパラレル・データでＩＯＸに書込み、ＩＯＸから１６チャネルのTDIF-1信号に変換するものです。
ＤＳＰは最大４個のＩＯＸを接続する事ができますので、最大７２チャネルの入出力データをＤＳＰ１個が処理できることになります。

各ＤＳＰの処理内容の配分
ＩＯＸを使用する事により入出力信号を増やす事はできますが、このＩＯＸからのRead/Writeや信号処理内容でフィルターの積和演算、バスのミックス、メータ・レベル・ピークデータの作成等、処理に多数の命令ステップを必要としますので、１つのＤＳＰで全ての処理を行う訳には行きません。
そこで、入出力の本数や、処理内容を基に最適な配分方法を検討し、TM-D8000の信号処理ブロックが構成されています。従って、左から右へと言うアナログ的な信号の流れと若干異なる箇所も存在します。
次項から、TM-D8000のディジタル信号処理理解に必要な基礎知識と、各ＤＳＰの信号処理内容を説明して行きますので、各ＤＳＰの信号処理図を参照しながらTM-D8000におけるディジタル信号処理の全体像を理解する参考にして下さい。

2. Basics of Digital Signal Processing

2. 1 Expressing Digital Data with Figures of 2's Complement

The analog input signal is spread into time axis and amplitude axis using AD converter. Quantization of amplitude varies from 16 bits to 24 bits depending on the kind of AD converter used. Time axis is decomposed into the cycle of sampling frequency (Fs). To express the signals from ADC and the digital data fed from external device, figures of 2's complement is used usually. Figures of 2's complement system is widely adopted because defining of the polarity in calculating addition / subtraction / multiplication / division becomes easy by adopting this 2's complement system. Polarity of signal can be judged by knowing only one bit of the code configuration.

2. ディジタル信号処理基礎知識

2. 1 ディジタル・データの２の補数表現

入力アナログ信号は、ＡＤコンバータにより、振幅軸と時間軸が離散化されます。振幅軸は、使用されるＡＤＣにより16 bit～24 bit等の語長に分解され、時間軸はサンプリング周波数(Fs)周期に分解されます。ＡＤＣからの信号や、外部から与えたディジタル・データは、通常２の補数表現が用いられます。２の補数表現を用いる事により、信号の加減乗除における符号の演算が容易になる事から、広く使用されています。この表現方法を使用した信号は符号の1bitを知るだけで符号極性が分かります。

Simple Expression : Minimum level of signal = 0, Its maximum = 2^n-1

単純な表現 : 信号の最小値を 0、最大値を2^n-1で表現した場合

Fig1

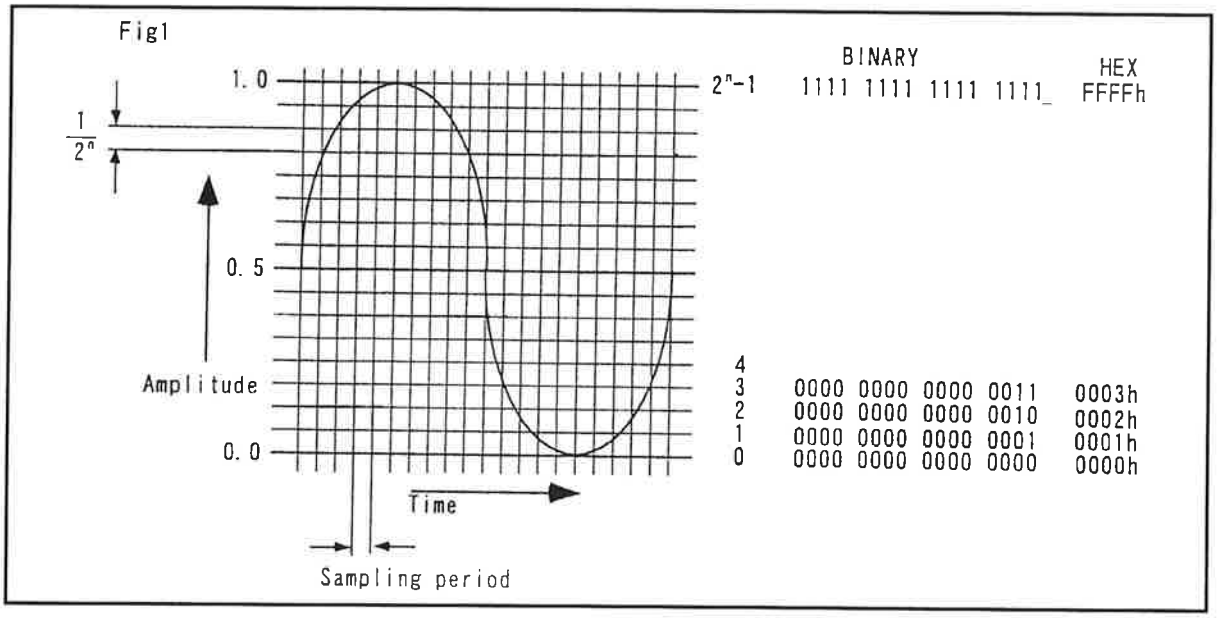

Expressing with Figures of 2's Complement : Absolute maximum level of negative polarity signal = -2^{n-1}
Maximum level of positive polarity signal = $2^{n-1}-1$

2の補数表現 : 負信号の最大値を-2^{n-1}、正信号の最大値を$2^{n-1}-1$で表現した場合

Fig2

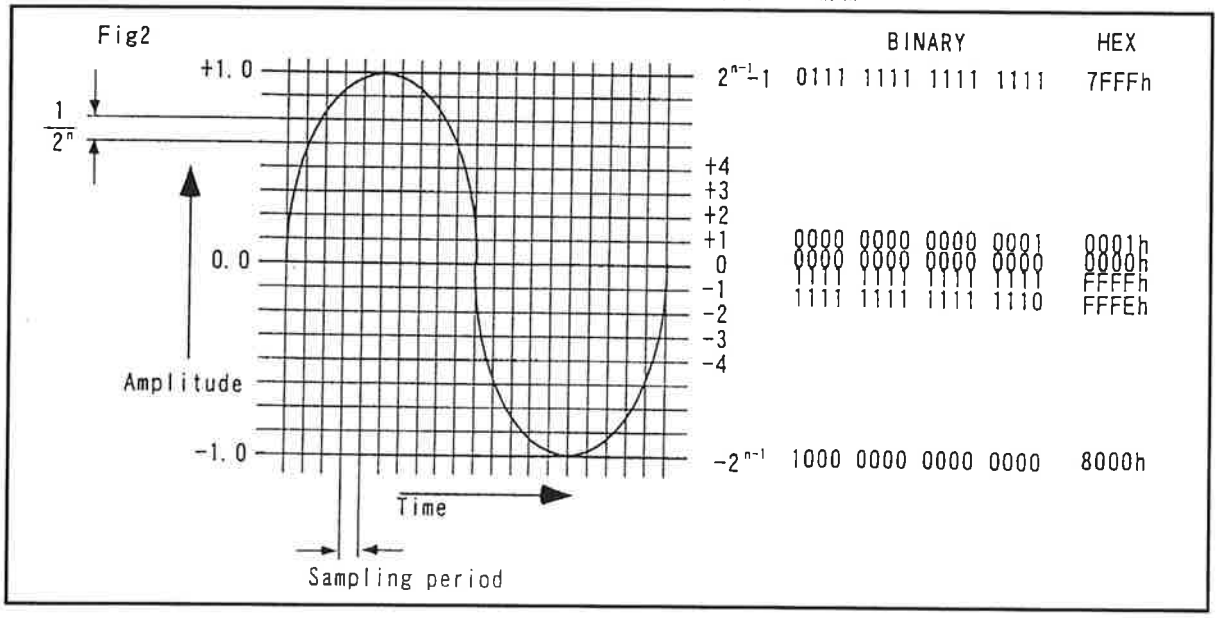

2. 2 Kinds of Signal processing

Figures below compare method of signal processing among analog and digital states.

2. 2 各種信号処理

基本的なアナログ信号処理をディジタルに置き換えた場合を下図に示します。

Analog Processing　アナログ処理	Digital Processing　デジタル処理
Inverted Amplifire 反転増幅器	Multiplication of negative coefficient figures and data 負係数とDataとの乗数
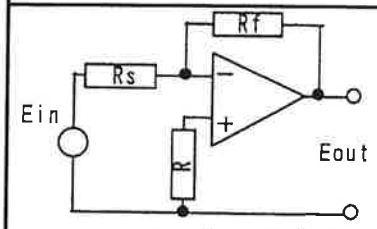 Eout=Ein* (-Rf/Rs)	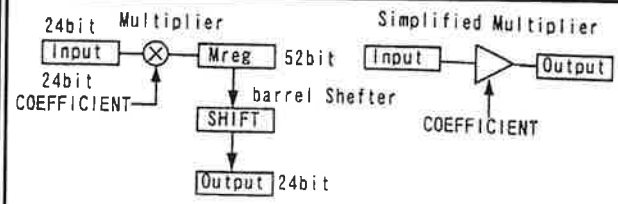
Non-Inverted Amplifire 非反転増幅器	Multiplication of positive coefficient figures and data 正係数とDataとの乗数
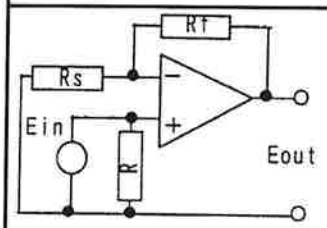 Eout=Ein* (1+Rf/Rs)	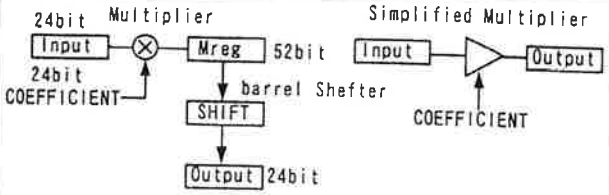
Adder 加算器	Arithmetics of adding and multiplying the each coefficient and data 各係数と各Dataとの積和演算
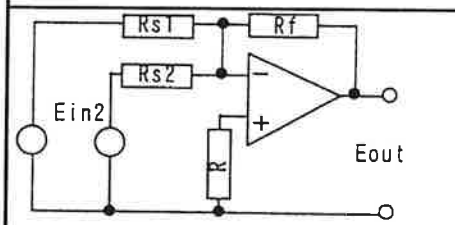 Eout=Ein1* (-Rf/Rs1) +Rin2* (-Rf/Rs2)	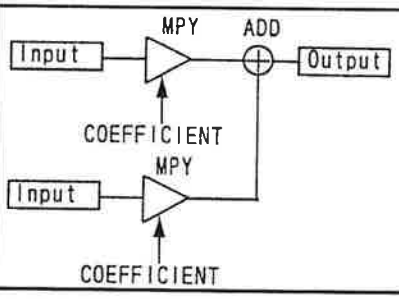
Switch スイッチ	Arithmetics of adding and multiplying method or pointer method 積和演算方式又はポインタ方式
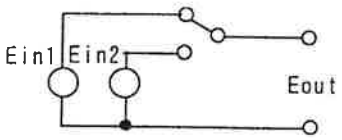	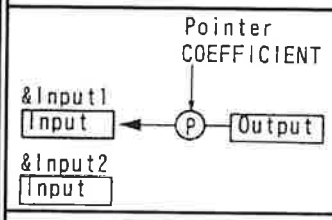
Absolute Value Amplifier　絶対値増幅器	Execution of Absolute Command　ABSOLUTE命令の実行
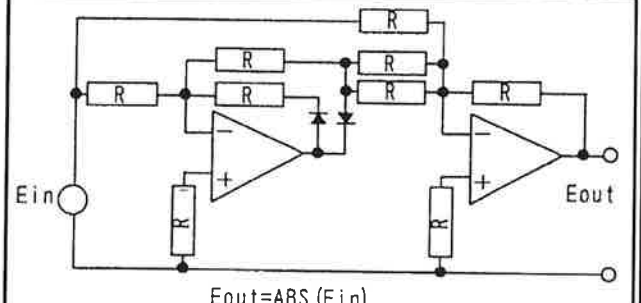 Eout=ABS (Ein)	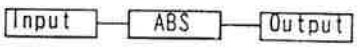

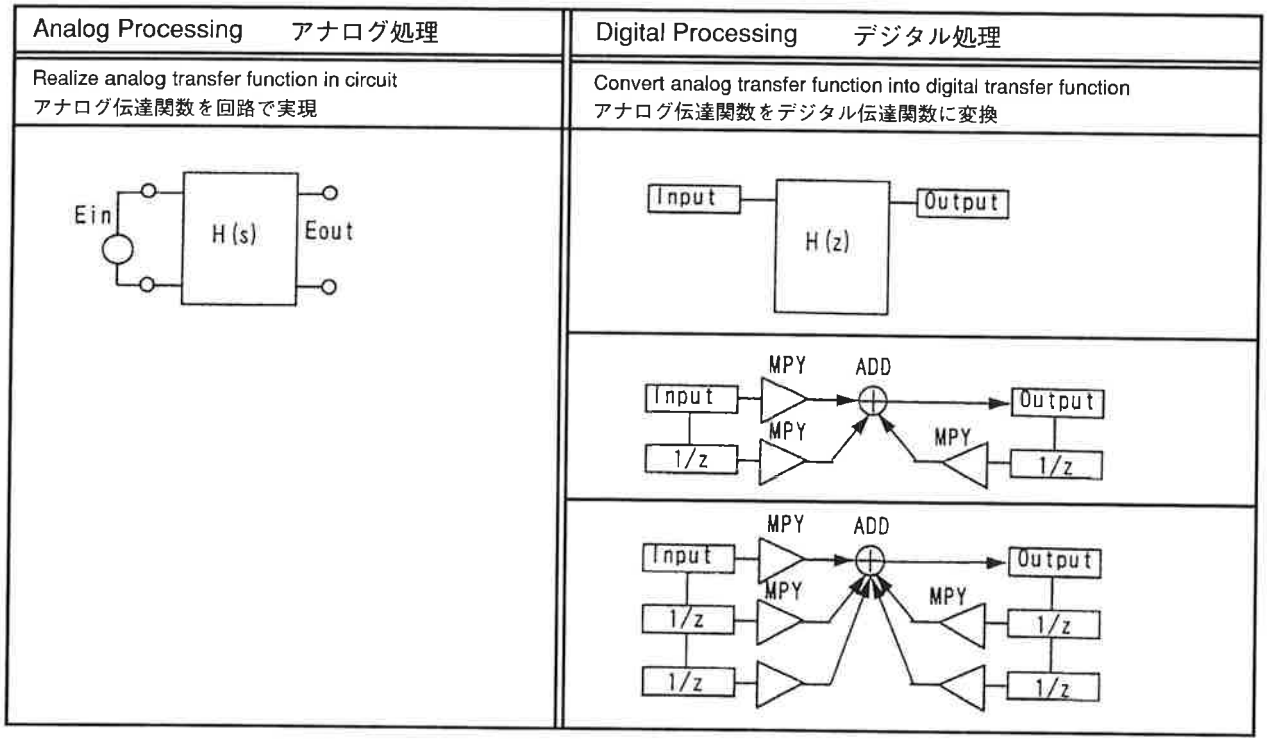

On digital filter circuit, the coefficients of numerator and denominator of H(z) are calculated by converting analog transfer function H(s) into transfer function H(s) of digital domain. Theory of this conversion is purely a subject in algebra and rather difficult to understand, omit to explain it.
Procedure on processing coefficient obtained from the filter parameter of G,F,Q etc are pre-programmed within the CPU at main side. Characteristics are controlled by renewing the contents of coefficient memory through Host I/F of the DSP.

2. 3 Amplification of Signal

On digital signal processing, attenuation of input signal level is performed by multiplying coefficient (±1.0 ～ 0.0) and input signal level. To the contrary, amplification is performed by making left shift when data is kept in multiplying adder register. One time left shift will increase the amplitude of signal by +6 dB i.e. two times approximately.

2. 4 Detection of Meter Level

On TM-D8000, level of signal can be monitored with meter at each spots of INPUT (PRE/POST EQ), MTR RETURN/SEND, (PRE/POST EQ), GROUP BUSS, AUX, and STEREO.
Level of each signal is transformed into absolute value with each DSP as a latest data, and that latest data is compared with the previous data prior to each sampling process performed. Then the data of higher value among these compared are preserved in the memory of DSP. When Main CPU demands meter data through DSP Host I/F, the data is sent out from DSP to Main CPU through DSP Host I/F. Since Main CPU demands data every 30 m Second, indication of meter is renewed every 30 m Second.

ディジタル・フィルターは、アナログ伝達関数H(s)からディジタル領域での伝達関数H(z)に変換し、H(z)の分子・分母係数を算出します。この変換理論の理解はやや難解なので説明は割愛します。
G・F・Q等のフィルター・パラメータから係数を算出する処理は、全てMain側のCPU内にプログラムされ、DSPにはDSP Host I/Fを介して係数メモリーの内容を更新する形で、特性変化を行っています。

2. 3 信号の増幅

ディジタル信号処理では、入力信号と係数（±1．0～0．0）を乗算する事で、入力信号の減衰が行えます。増幅する場合は、積和レジスターにデータが格納された状態で、左シフトを1回行う事で信号振幅が2倍（約+6dB）増幅された事になります。

2. 4 メータ・レベルの検出

TM-D8000には、INPUT(PRE/POST EQ), MTR RETURN /SEND (PRE/POST EQ), GROUP BUSS, AUX, STEREOの各箇所の信号レベルをメータでモニターできます。このメータ・データは、各DSP内で各信号の絶対値を作りサンプリング毎に前データと新データと比較して、大きい方のデータをDSPのメモリー上に保存しております。Main CPUからDSP Host I/Fを介してメータ・データの要求が有ると、DSPからMain CPUにDSP Host I/Fを介して送出されます。
Main CPUからの要求は約30ms毎に行われますので、メータ指示は30ms毎に更新される事になります。

3. Outline of Signal Processing on each DSP

3.1 DSP A1/A2/A3A/A3B/A3C

These DSP select input signal from among read at IOX, give processing of DC_CUT HPF, PAD, PHASE, and EQ on it, write that processed to the IOX then. Each DSP_A handles different channels, but the programmings are common on all of these five DSP.

Table below shows the channels each DSP_A handles.

DSP_A	INPUT SELECT	MODULE	POST EQ METER	OUTPUT
DSP_A1	AD DATA CH1..8	CH1...CH8	CH1...CH8	INSOUT CH1..8
	DI01 IN CH1..8	HPF/PAD/PHASE/EQ		
DSP_A2	AD DATA CH9..16	CH9...CH16	CH9...CH16	INSOUT CH9..16
	DI02 IN CH9..16	HPF/PAD/PHASE/EQ		
DSP_A3A	MTR SND 1..8	MTR1...MTR8	MTR1...MTR8	INSOUT MTR1..8
	MTR RTN 1..8	HPF/PAD/PHASE/EQ		
DSP_A3B	MTR SND 9..16	MTR9...MTR16	MTR9...MTR16	INSOUT MTR9..16
	MTR RTN 9..16	HPF/PAD/PHASE/EQ		
DSP_A3C	MTR SND 17..24	MTR17...MTR24	MTR17...MTR24	INSOUT MTR17..24
	MTR RTN 17..24	HPF/PAD/PHASE/EQ		

INPUT SELECTOR
In response to the selection of Input Signal Select executed on the Digital I/O menu display, input signal of two routes per one channel is switched in the DSP-A. Change of coefficient memory value of DSP is made by multiplying coefficient of selected signal -1.0, and by multiplying coefficient of remaining signal 0.0 which are received from Main CPU through Host I/F. Selection is performed by these value change.
It is impossible to express a figure +1.0 with the figures of 2's Complement.
Therefore, a figure +0.999...(7FFFFFh) is substituted for +1.0 as a figure near to that +1.0 endlessly. This is the reason why -1.0 coefficient but not +1.0 is adopted. With this operation, exactly speaking, an error of input/output data could occurs. To eliminate that error, polarity is inverted in the multiplier by introducing -1.0000 (800000h) as a coefficient. This operation is adopted on the processing stage of each DSP described hereafter.

DC CUT HPF
In order to eliminate the DC offset component that is contained in input signal, a HPF of Fc=2 Hz is inserted fixedly.

INPUT LEVEL METER
Signal flows through DC CUT HPF with its peak value held, sent out to Main CPU after that.

PAD/PHASE
Insert PAD in the input circuits of phase reverse switch and EQ. When relatively high level music sound of a certain frequency range is to be boosted with EQ, that signal becomes saturated by increasing EQ gain. The PAD helps to decrease level of music sound before entering EQ, thus, prevents saturation of music sound. In order to save steps of DSP command, PAD and PHASE uses common coefficient. This common coefficient is also used in the following stage 24 dB attenuator. Therefore, PAD setting of 0 dB through -36 dB will result -24 dB through -60 dB actually.

3. 各ＤＳＰ内信号処理の概容

3. 1 DSP A1/A2/A3A/A3B/A3C

このDSPではIOXから読み出した入力信号を選択し、DC_CUT HPF,PAD、PHASE及びEQ処理を行ってIOXに書き込んでいます。各DSP_Aは扱うチャネルは異なりますが、DSPプログラム自体は５個共通です。

各DSP_Aの処理チャネルを下表に示します。

INPUT SELECTOR
DIGITAL I/O画面から設定されるINPUT SIGNAL SELECTの選択に従って、DSP_A内で１チャネル当たり２系統の入力信号を切換ます。選択された方信号に乗算する係数を-1.0、反対側の信号に乗算する係数を0.0にMain CPUからHOST I/Fを介してDSPの係数メモリーの値を変更する事により行われます。
ここで、係数を+1.0にしないで-1.0にしている理由は、２の補数表現では+1.0は表現出来ず、限りなく+1.0に近い値である　+0.9999...(7FFFFFh)の値までしか使えないので、厳密に言えば入出力のデータが異なってしまいます。そこで、-1.0000 (800000h)を係数として乗算器の中で符号反転して、誤差の無い乗算結果を得ています。この方法は後述する各DSPの処理で使用されています。

DC CUT HPF
入力信号に含まれる直流オフセット成分の排除を目的にＦｃ＝２ＨｚのHPFを固定的に挿入しています。

INPUT LEVEL METER
DC CUT HPFを通った後の信号をピークホールドして、Main CPUに送出します。

PAD/PHASE
位相切換と、ＥＱの入力にPADを挿入します。PADは比較的大きな楽音にＥＱで、ある部分の周波数域を持ち上げたい場合、そのままEQ GAINを大きくすると飽和してしまいます。この様な時にPADで楽音全体を少し下げてからＥＱをかける事で飽和を防げます。
PADとPHASEはDSPの命令ステップを減らす為に、共通の係数を使用しています。また、次の24dBATTもこの係数を利用していますので、PADが0dB～-36dBの設定であっても実際は-24dB～-60dBの係数値となっています。

24 dB ATT
The 24 dB fixed attenuator placed in front of EQ prevents saturation on the total frequency characteristics even when the equalizer parameter of each band becomes overlapped. The input signal attenuated by the fixed attenuator is processed before four band equalizer processed, then it is increased again to the original level. Thus, drop of dynamic range will not occur.

Prevention of Dynamic Range Drop at Equalizer Stage.

24dB ATT
EQの手前の24dBの固定減衰器は、各バンドのイコライザー・パラメータが一時的に重なっても総合特性で飽和しない用に挿入しています。入力信号を下げてから４バンドのイコライザー処理を行い、その後、元のレベルに戻す事によりＥＱの設定によるダイナミック・レンジの低下を防いでいます。

イコライザーでのダイナミック・レンジ低下の防止

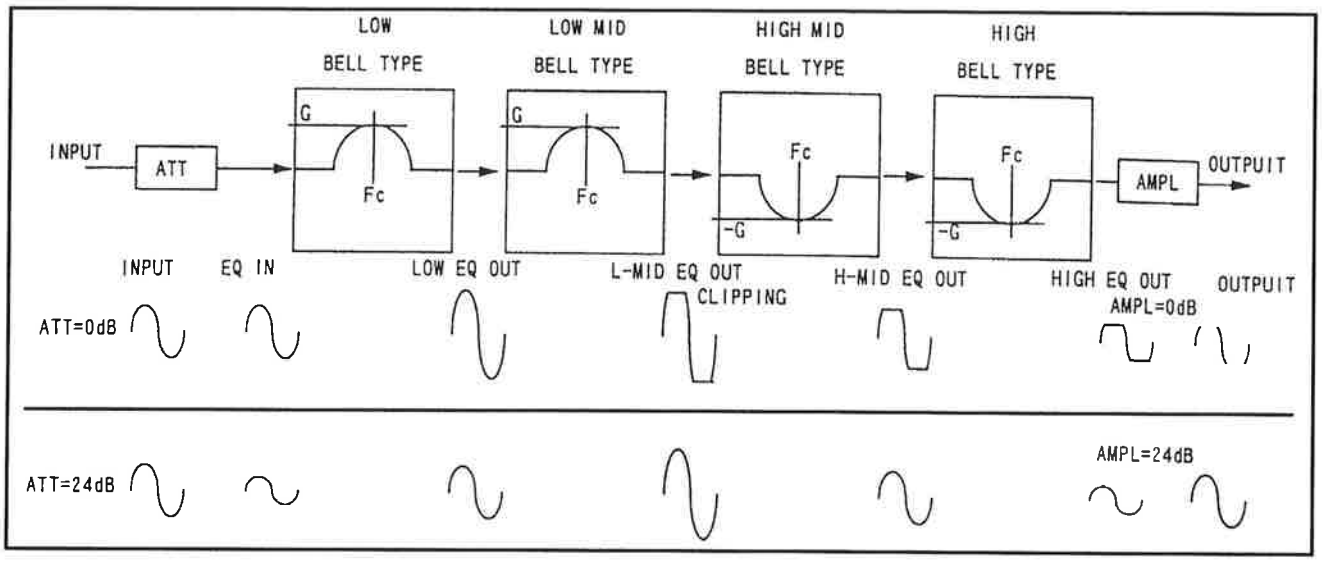

When the center frequency of equalizers of each band becomes almost same, the level of signal inside equalizers could rise very high for a certain period,even though overall frequency response does not show remarkable increase of gain. If signal increases inside equalizer in such way, saturation and distortion occur there. Once such saturation and distortion occurred, it could not be corrected by reducing gain on the following stage. Therefore, level of signal handled inside equalizer is kept low always, and drop of dynamic range is prevented regardless of equalization setting.

各バンドの中心周波数が近い場合、総合周波数特性でGAINの増加量は少なくても、内部では一時的に大きなデータ値となってしまう場合も有ります。各バンドの途中で飽和した場合、後段でGAINを下げてもいったん歪んだ信号は元に戻りません。そこで、ＥＱ内で扱う信号レベルを小さくして、この様な設定時のダイナミック・レンジの低下を回避しています。

3. 2 DSP_B

At this stage, Delay, Fader and Cut processing are given to the Post EQ signal. Signal is sent out as Post Fader then.
Also, Pre Fader/Post Fader signals are selected and placed on the AUX 1 --- 4 BUSS and PFL BUSS. Since the processing capability of this DSP is 16 channels maximum, SUB MIX BUSS data of 16 channels or 8 channels are sent out to the AUX 1--- 1 BUSS and PFL BUSS.

3. 2 DSP_B

ここでは、POST EQの信号に、DELAYとFADER及びCUT処理を行って、POST FADER信号を出力しています。
また、PRE FADER/POST FADERの信号を選択してAUX1...4のBUSSとPFL BUSSに乗せています。
このDSPでは、最大16CHの信号までしか扱えませんので、AUX1...1 BUSSとPFL BUSSには16CH又は8CH分のSUB MIX BUSSデータが出力されます。

	INPUT	OUTPUT	SUB MIX AUX1...4	SUB MIX PFL	Processing Channel
DSP B1A	INSIN CH1...16	PSTFD CH1...16	CH1...16	CH1...16	16
DSP B1B	INSIN MTR1...16	PSTFD MTR1...16	MTR1...16	MTR1...16	16
DSP B2	INSIN MTR17...24	PSTFD MTR17...24	MTR17...24	MTR17...24	8

Fader Interpolation
When FADER is moved, new FADER value is transmitted as a coefficient to DSP about every 30 mSec. The DSP multiplies this coefficient and signal data.
Therefore, level of output signal changes in stair state in response to the move of fader, and it is heard as a grating noise. In order to avoid such noise, a low pass filter is built in the DSP. Thus, when fader coefficient is fed, it is smoothed with that filter before being multiplied by the data of signal. This processing is called interpolation. Since the coefficient used on CUT and FADER is identical, time constant of the filter can not be set too big. Setting it big results favorable as to noise factor, but it results slow response of CUT action on the other hand. To satisfy both noise factor and response speed, the filter is made in such way its time constant changes automatically in relation with the direction of fader moving i.e. CUT ON 10 ms and CUT OFF 30 ms.

3. 3 DSP_C1

In order to perform BUSS ASSIGN and PANNING against these GROUP BUSS, STEREO BUSS and AUX 5-6 BUSS of SUB MIX, POST FADER signal of CH 1 --- 16 are used.
Also, signal data for DIRECT OUT of INPUT CH domain are sent out from this DSP.

3. 4 DSP_C2

In order to perform BUSS ASSIGN and PANNING against these GROUP BUSS, STEREO BUSS and AUX 5-6 BUSS of SUB MIX, POST FADER signal of MTR 1 --- 16 are used.
This DSP_C2 processes Parametric EQ of STEREO MASTER which overflowed the capacity of command step volume to be sent to another DSP. These INSERTION SEND / RETURN signals which shifts MASTER FADER, PRE FADER / POST FADER are also send/received with this DSP_C2.

3. 5 DSP_C3

This processor processes the following:
1) Effects DC CUT HPF PAD/PHASE/BALANCE against the signal of STEREO RETURN 1 --- 6.
2) Effects BUSS ASSIGN and PANNING against GROUP BUSS, STEREO BUSS and AUX 5-6 BUSS of SUB MIX by using POST FADER signal of MTR 17 --- 24.

3. 6 DSP_D

This processor processes the functioning of INSERTION MATRIX.
1) Connects the POST EQ signal of CH 1 --- 16, MTR 1 --- 24 and STEREO OUT (PRE FADER/POST FADER) to the 4-channel external analog effector and 8-channel built in DYNAMICS.
2) Connects the signal of 8-channel built in DYNAMICS and the 4-channel external analog effector returned to the INSERT IN of CH 1 --- 16, MTR 1 --- 24 and STEREO OUT (PRE FADER/POST FADER).
Realizes INSERTION MATRIX by accessing to any DSP MEMORY ADDRESS. The MAIN CPU designates the pointer for input signal data on DSP MEMORY. Also, this processor sends POST EQ signals of CH 1 --- 16 and MTR 1 --- 24 to the MAIN CPU for POST EQ LEVEL METER use.

フェーダ補間
FADERが動かされると、約30ms毎に新しいFADER値が係数としてDSPに送信されます。
DSPはこの係数を毎サンプル信号データと乗算していますので、フェーダ変化過程では出力信号レベルが階段的な変化となり耳障りな雑音として聞こえてしまいます。これを回避する為にDSP内にLPFを用意しておき、FADER係数が与えられたらLPFで緩やかな変化にしてから信号に乗算する係数としています。これをフェーダ補間と呼びます。フェーダとカットは同じ係数を使用しているので、LPFの時定数を大きくしすぎると、雑音には有利ですがCUT動作の応答が遅くなるので、フェーダの変化方向で時定数が自動的に変化する様にしており、CUT ON 10ms / CUT OFF 30msに設定しています。

3. 3 DSP_C1

CH1...16のPOST FADER信号を使用してSUB MIXのGROUP BUSS、STEREO BUSS、AUX5-6 BUSSにBUSS ASSIGNとPANNINGを行っています。
又、INPUT CH系のDIRECT OUT用の信号データもこのDSPから出力されます。

3. 4 DSP_C2

MTR1...16のPOST FADER信号を使用してSUB MIXのGROUP BUSS、STEREO BUSS、AUX5-6 BUSSにBUSS ASSIGNとPANNINGを行っています。
また、他のDSPに命令ステップ量の制約で収まらなかったSTEREO MASTERのパラメトリックＥＱの処理と、MASTER FADERとPRE FADER/POST FADER切換のINSERTION SEND/RETURN信号の送受信も行っています。

3. 5 DSP_C3

STEREO RETURN1..6の信号にDC CUT HPF PAD /PHASE/BALANCE処理を行い、MTR17...24と共に、POST FADER信号を使用してSUB MIXのGROUP BUSS、STEREO BUSS、AUX5-6 BUSSにBUSS ASSIGNとPANNINGを行っています。

3. 6 DSP_D

INSERTION MATRIX機能の為の処理を行います。
CH1...16,MTR1...24,STEREO OUT(PRE FADER/POST FADER)のPOST EQ信号を、内蔵DYNAMICS 8CHと4CHの外部アナログ・エフェクターに接続を行います。
そして内蔵DYNAMICS 8CHと4CHの外部アナログ・エフェクターの戻りの信号を、CH1...16,MTR1...24,STEREO OUT (PRE FADER/POST FADER)のINSERT INに接続します。
DSP処理内容は、DSP MEMORY上に有る入力信号データへのポインタをMAIN CPUから指定して任意のDSP MEMORY ADDRESSをアクセスする事でINSERTION MATRIXを実現しています。
またCH1...16,MTR1...24のPOST EQ信号を、POST EQ LEVEL METER用としてMAIN CPUに送出しています。

3. 7 DSP_E

1) Add SUB MIX BUSS DATA made by DSP_C1 / DSP_C2 / DSP_C3, processes BUSS MASTER FADER, makes final output data.
2) Performs DC CUT HPF processing on the signal received from TALK BACK MIC, sends the result to AUX 1-2.
3) Generates sine wave signal and set the level for SLATE signal.
4) Distributes it to every BUSS.
5) Shifts the monitor of D INN, AUX 1 --- 6.

3. 8 DSP_F

1) Processes 4-channel GATE+COMP/LIMITER for built in DYNAMICS function handled by one piece DSP_F.
2) Generation and dispatching of meter data of INPUT / OUTPUT/GAIN REDUCTION which are required for monitoring level of DYNAMICS.

3. 7 DSP_E

DSP_C1/DSP_C2/DSP_C3で作成されたSUB MIX BUSS DATAを加算して、BUSS MASTER FADER処理を行った後、最終的な出力データを作成します。
他に、TALK BACK MICからの信号にDC CUT HPF処理とAUX1-2への送り、SLATE信号用のサイン波信号の発生とレベル設定、及び各BUSSへの送り等、そして、D INやAUX1...6のモニター切換等の処理を行っています。

3. 8 DSP_F

内蔵DYNAMICSの処理で、一個のDSP_Fで4CHのGATE+COMP/LIMITERの処理を行っています。
DYNAMICSのレベル監視に必要なINPUT/OUTPUT/GAIN REDUCTIONのメータデータもこのDSP_Fで作成・送出しています。

4. List of DSP that generates Meter Data

4. メータ・データを作成しているＤＳＰ

15DOT LED METER

METER CONTROL	1...8	9...16	17...24	ST-RTN1...6
CH/ST RETURN (PRE EQ)	DSP_A1	DSP_A2	---	DSP_C3 (PRE FADER)
CH/ST RETURN (POST EQ)	DSP_D	DSP_D	---	DSP_C3 (PRE FADER)
MTR RETURN (PRE EQ)	DSP_A3A	DSP_A3B	DSP_A3C	---
MTR RETURN (POST EQ)	DSP_D	DSP_D	DSP_D	---
MTR SEND	DSP_C1	DSP_C1	DSP_C1	---
AUX SEND	---	---	DSP_E	---

OL + 3DOT LED METER

MASTER LEVEL METER	DSP_E
DYNAMICS LEVEL METER DYN1A...DYN2B	DSP_F1
DYNAMICS LEVEL METER DYN3A...DYN4B	DSP_F2

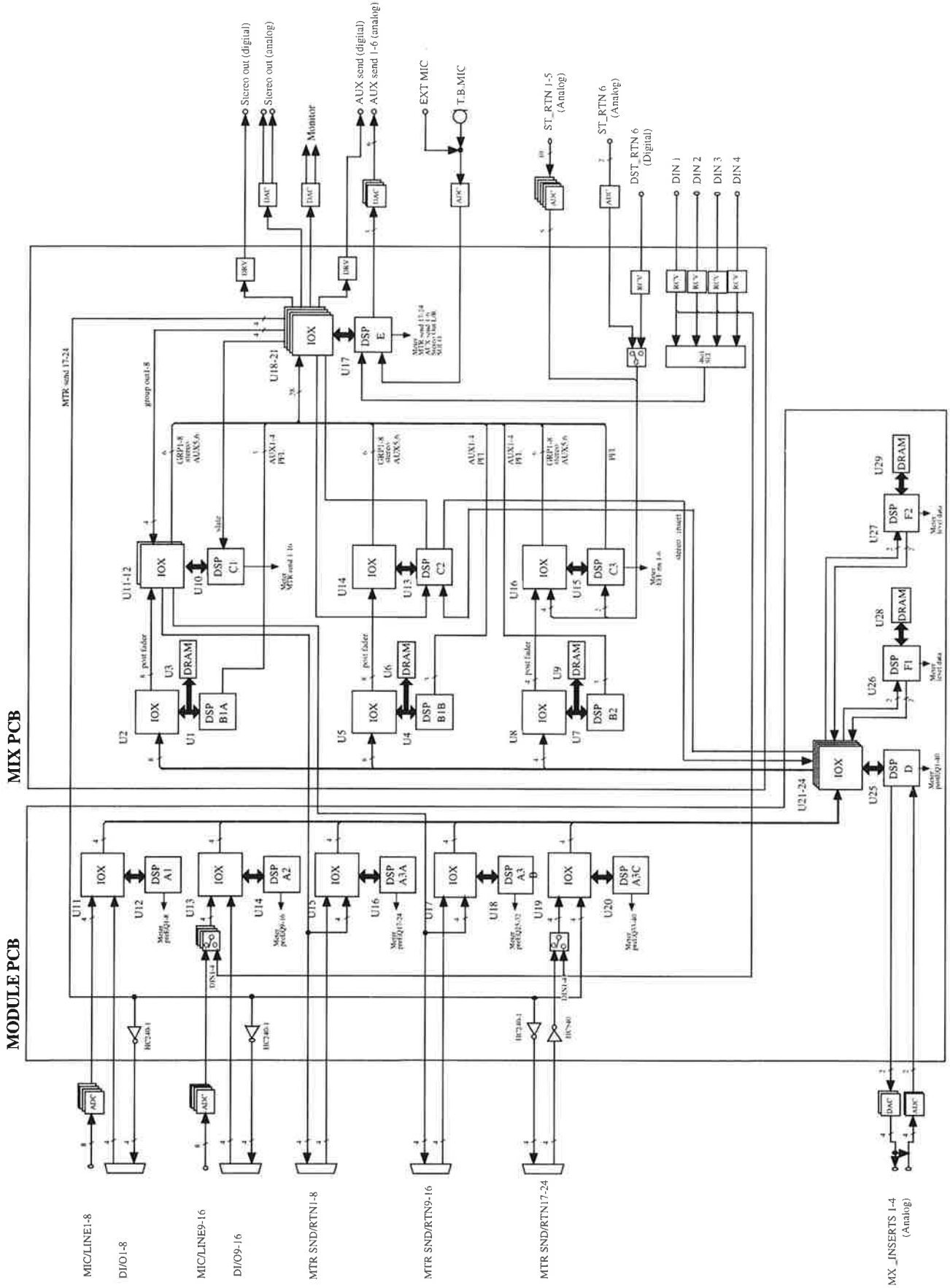
MIX PCB
MODULE PCB
Stereo out (digital)
Stereo out (analog)
Monitor
AUX send (digital)
AUX send 1-6 (analog)
EXT MIC
T.B.MIC
ST_RTN 1-5 (Analog)
ST_RTN 6 (Analog)
DST_RTN 6 (Digital)
DIN 1
DIN 2
DIN 3
DIN 4
MIC/LINE1-8
DI/O1-8
MIC/LINE9-16
DI/O9-16
MTR SND/RTN1-8
MTR SND/RTN9-16
MTR SND/RTN17-24
MX_INSERTS 1-4 (Analog)

MIX PCB

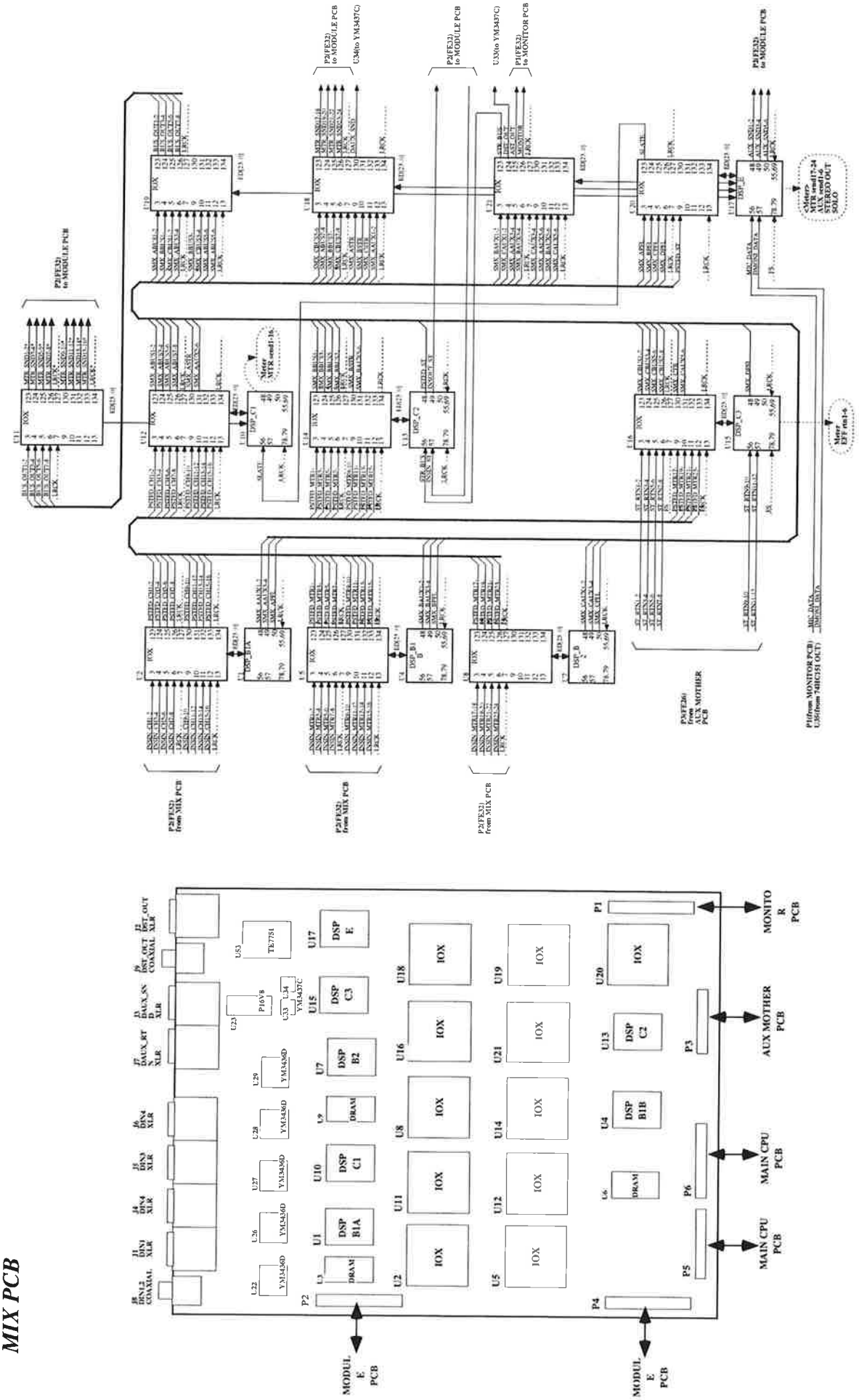

MODULE PCB + DSUB PCB

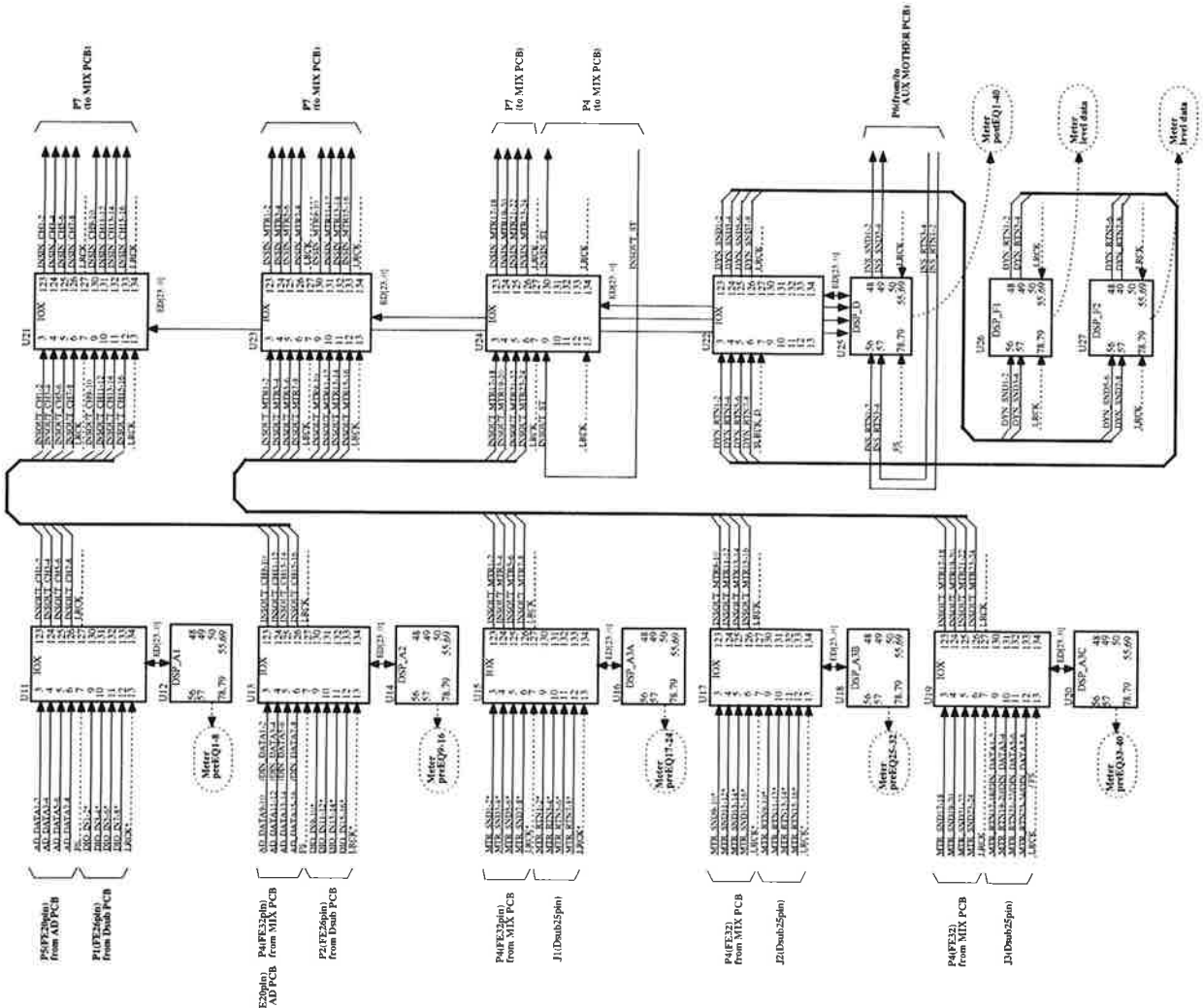

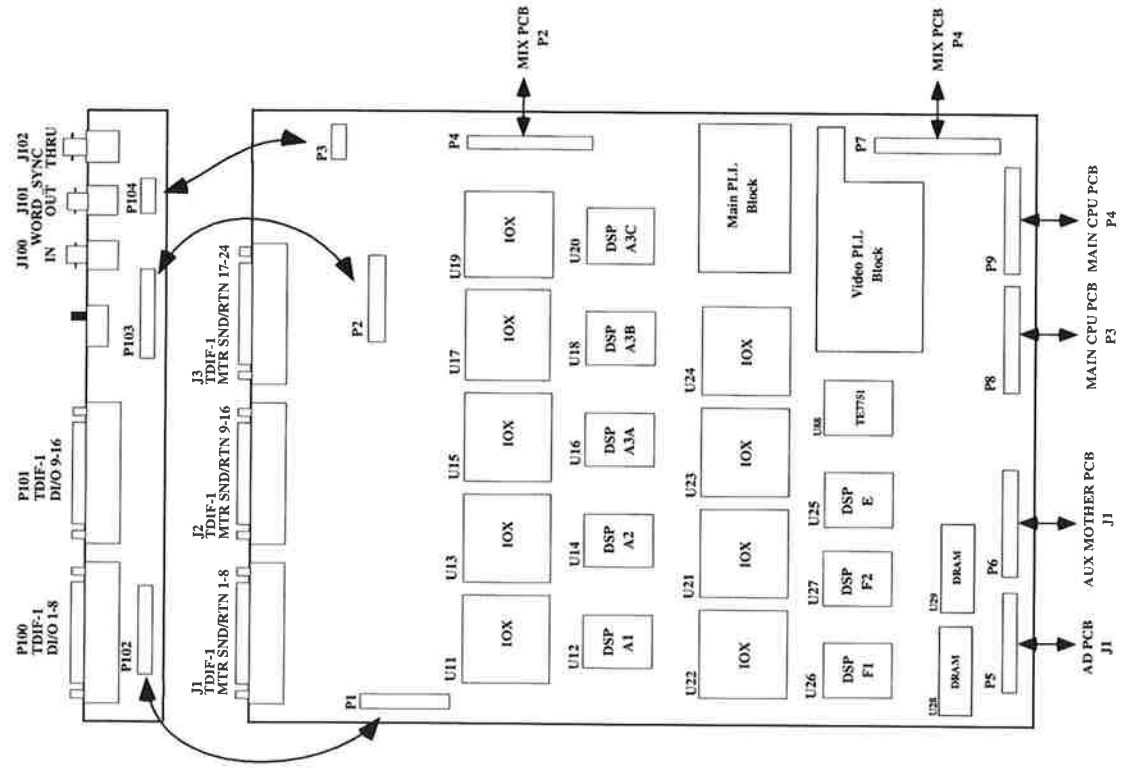

DSP-A1

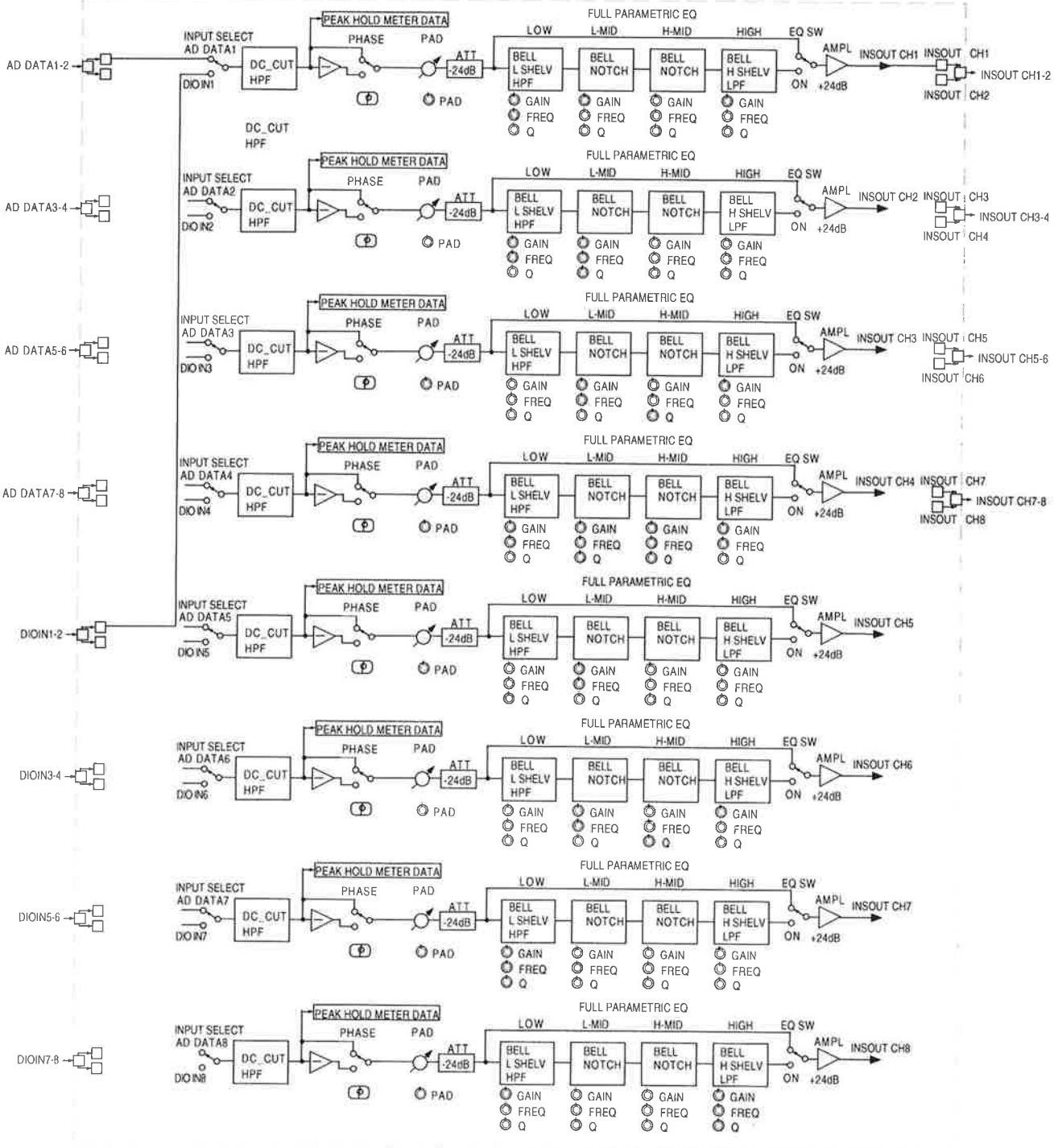
AD DATA1-2
DIOIN1
INPUT SELECT
AD DATA1
DC_CUT
HPF
PEAK HOLD METER DATA
PHASE
PAD
ATT
-24dB
FULL PARAMETRIC EQ
LOW
L-MID
H-MID
HIGH
EQ SW
BELL
L SHELV
HPF
BELL
NOTCH
BELL
H SHELV
LPF
GAIN
FREQ
Q
ON
AMPL
+24dB
INSOUT CH1
INSOUT CH1
INSOUT CH1-2
INSOUT CH2
AD DATA3-4
DIOIN2
INPUT SELECT
AD DATA2
INSOUT CH2
INSOUT CH3
INSOUT CH3-4
INSOUT CH4
AD DATA5-6
DIOIN3
INPUT SELECT
AD DATA3
INSOUT CH3
INSOUT CH5
INSOUT CH5-6
INSOUT CH6
AD DATA7-8
DIOIN4
INPUT SELECT
AD DATA4
INSOUT CH4
INSOUT CH7
INSOUT CH7-8
INSOUT CH8
DIOIN1-2
DIOIN5
INPUT SELECT
AD DATA5
INSOUT CH5
DIOIN3-4
DIOIN6
INPUT SELECT
AD DATA6
INSOUT CH6
DIOIN5-6
DIOIN7
INPUT SELECT
AD DATA7
INSOUT CH7
DIOIN7-8
DIOIN8
INPUT SELECT
AD DATA8
INSOUT CH8

DSP-A2

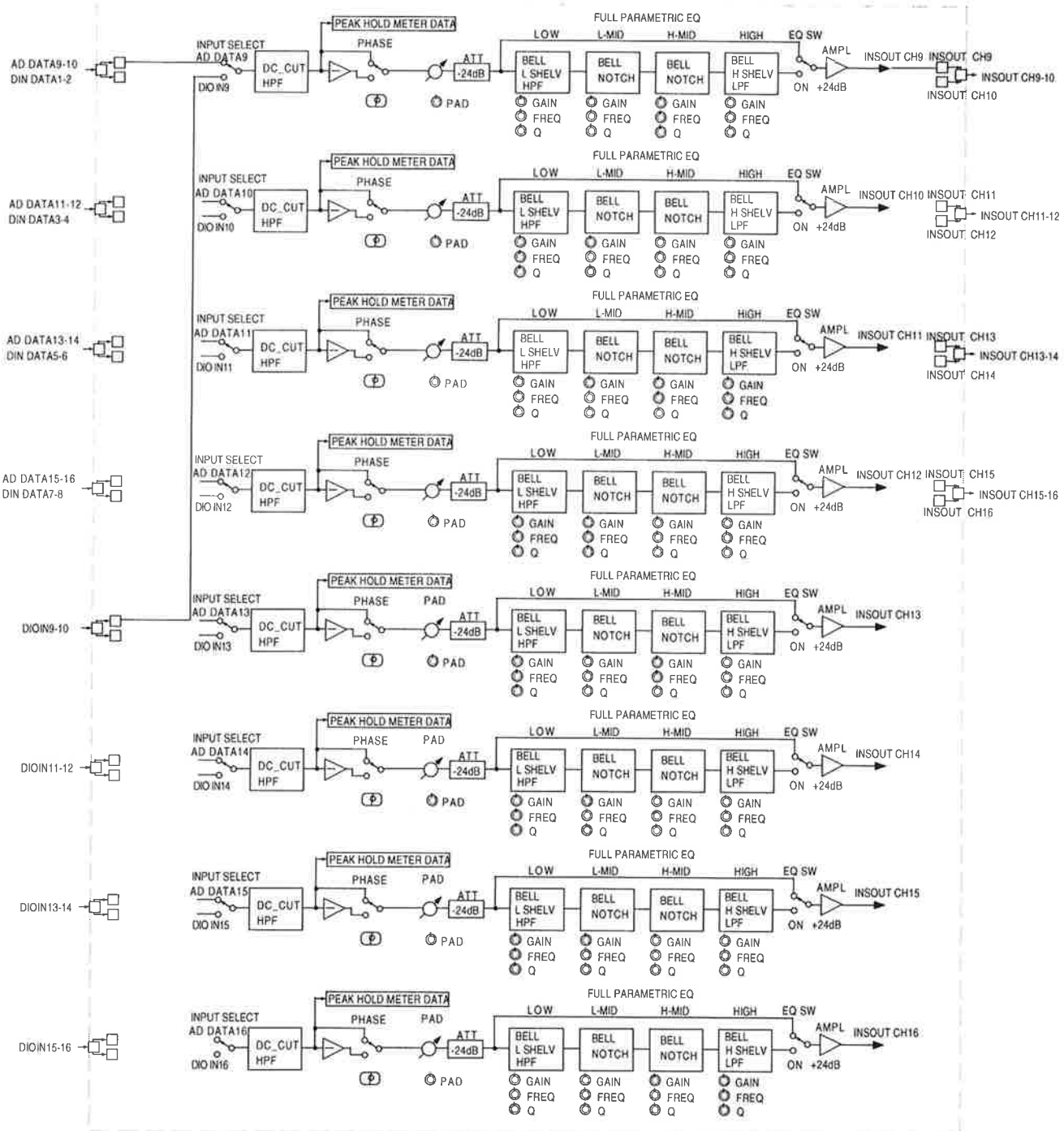
AD DATA9-10
DIN DATA1-2
DIOIN9-10
DIOIN11-12
DIOIN13-14
DIOIN15-16
INPUT SELECT
AD DATA9
AD DATA10
AD DATA11
AD DATA12
AD DATA13
AD DATA14
AD DATA15
AD DATA16
DIO IN9
DIO IN10
DIO IN11
DIO IN12
DIO IN13
DIO IN14
DIO IN15
DIO IN16
DC_CUT HPF
PEAK HOLD METER DATA
PHASE
PAD
ATT -24dB
FULL PARAMETRIC EQ
LOW
L-MID
H-MID
HIGH
EQ SW
BELL L SHELV HPF
BELL NOTCH
BELL H SHELV LPF
GAIN
FREQ
Q
ON +24dB
AMPL
INSOUT CH9
INSOUT CH9-10
INSOUT CH10
INSOUT CH11
INSOUT CH11-12
INSOUT CH12
INSOUT CH13
INSOUT CH13-14
INSOUT CH14
INSOUT CH15
INSOUT CH15-16
INSOUT CH16

DSP-A3A

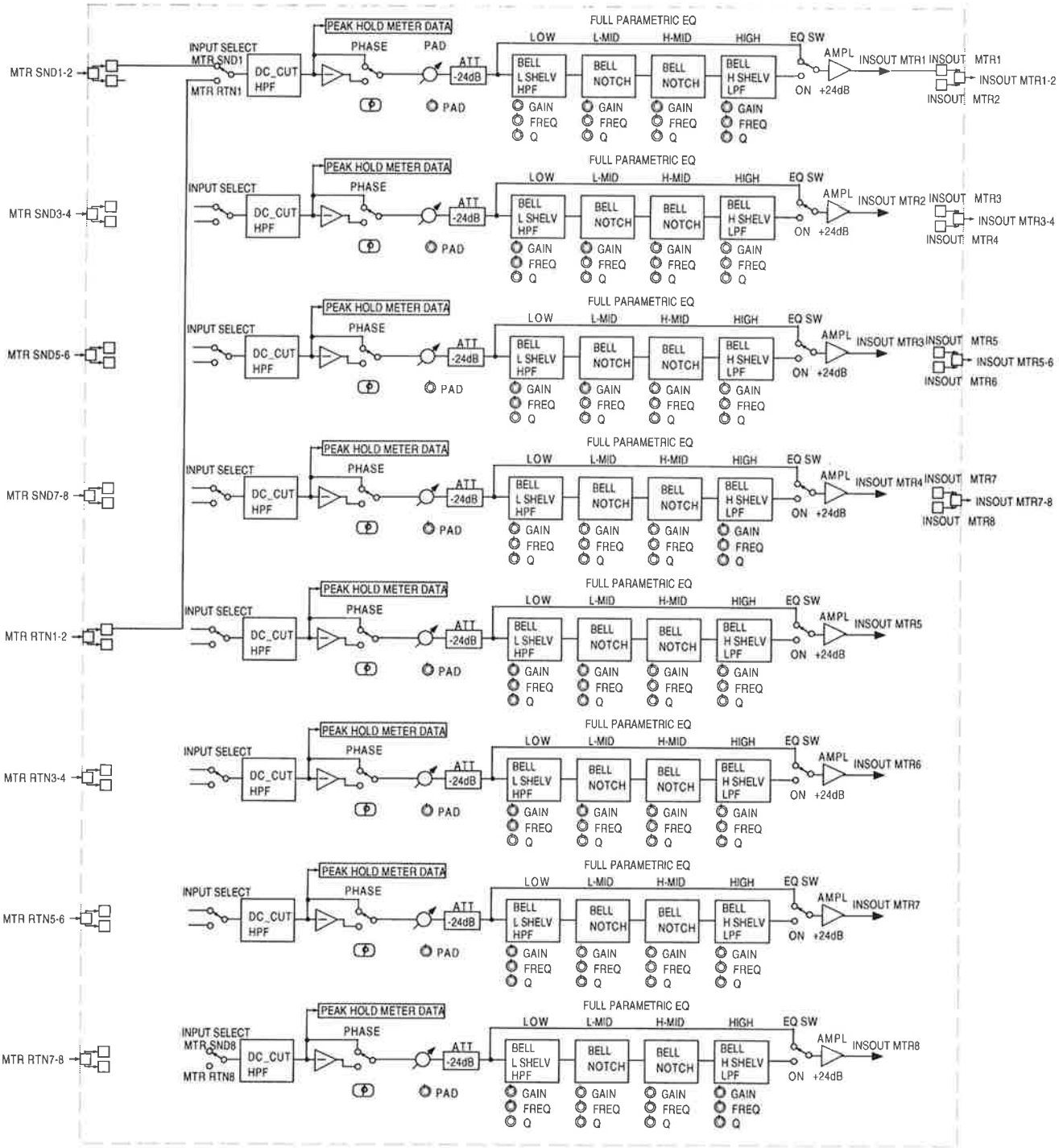
MTR SND1-2
INPUT SELECT
MTR SND1
MTR RTN1
DC_CUT
HPF
PEAK HOLD METER DATA
PHASE
PAD
ATT
-24dB
FULL PARAMETRIC EQ
LOW
L-MID
H-MID
HIGH
EQ SW
BELL
L SHELV
HPF
BELL
NOTCH
BELL
H SHELV
LPF
GAIN
FREQ
Q
ON
AMPL
+24dB
INSOUT MTR1
INSOUT MTR1-2
INSOUT MTR2
MTR SND3-4
INSOUT MTR2
INSOUT MTR3-4
INSOUT MTR3
INSOUT MTR4
MTR SND5-6
INSOUT MTR3
INSOUT MTR5-6
INSOUT MTR5
INSOUT MTR6
MTR SND7-8
INSOUT MTR4
INSOUT MTR7-8
INSOUT MTR7
INSOUT MTR8
MTR RTN1-2
INSOUT MTR5
MTR RTN3-4
INSOUT MTR6
MTR RTN5-6
INSOUT MTR7
MTR RTN7-8
INSOUT MTR8

DSP-A3B

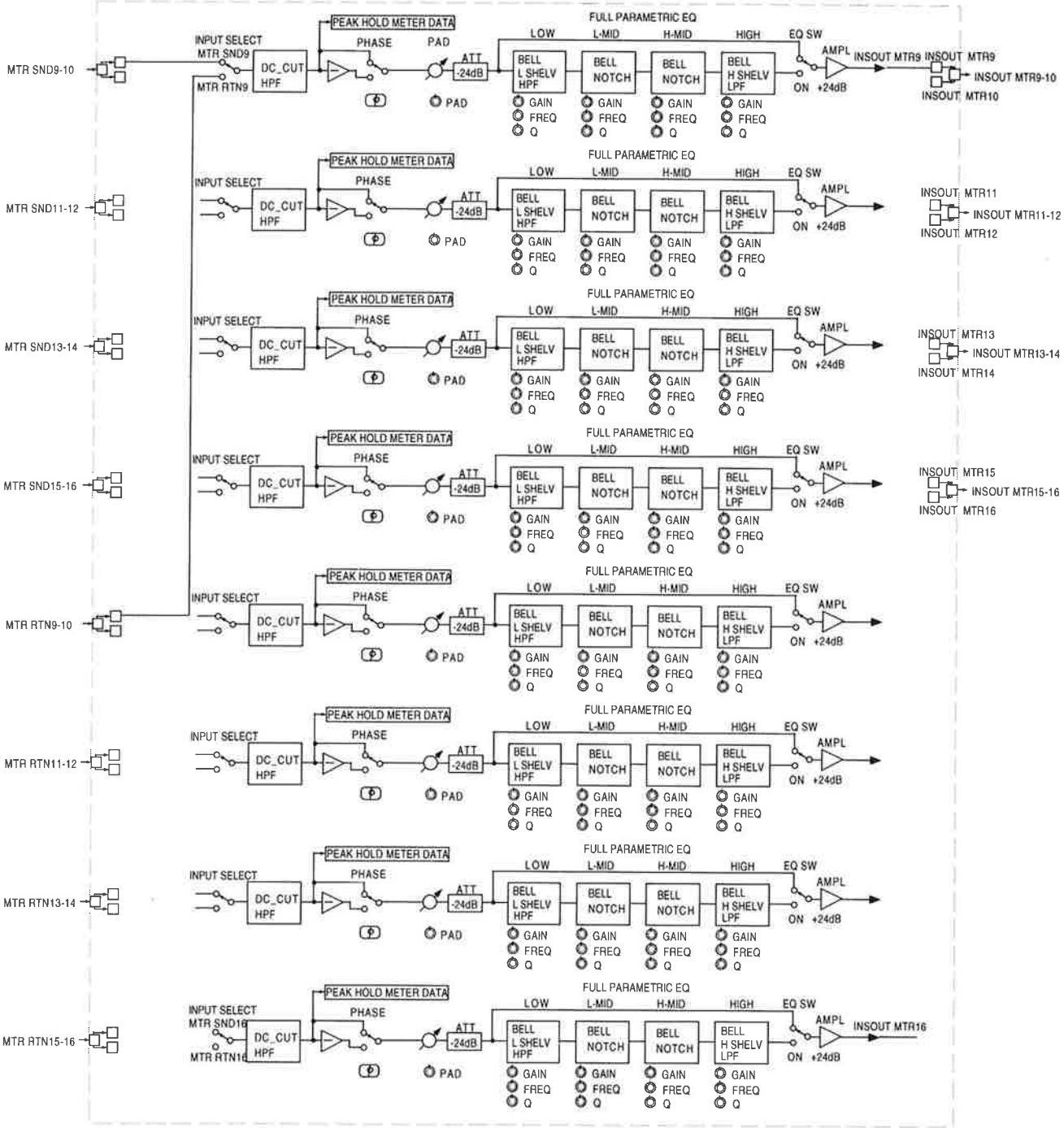
MTR SND9-10
MTR SND11-12
MTR SND13-14
MTR SND15-16
MTR RTN9-10
MTR RTN11-12
MTR RTN13-14
MTR RTN15-16
INPUT SELECT
MTR SND9
MTR RTN9
MTR SND16
MTR RTN16
DC_CUT HPF
PEAK HOLD METER DATA
PHASE
PAD
ATT -24dB
FULL PARAMETRIC EQ
LOW
L-MID
H-MID
HIGH
EQ SW
BELL L SHELV HPF
BELL NOTCH
BELL H SHELV LPF
GAIN
FREQ
Q
ON +24dB
AMPL
INSOUT MTR9
INSOUT MTR10
INSOUT MTR9-10
INSOUT MTR11
INSOUT MTR12
INSOUT MTR11-12
INSOUT MTR13
INSOUT MTR14
INSOUT MTR13-14
INSOUT MTR15
INSOUT MTR16
INSOUT MTR15-16
INSOUT MTR16

DSP-A3C

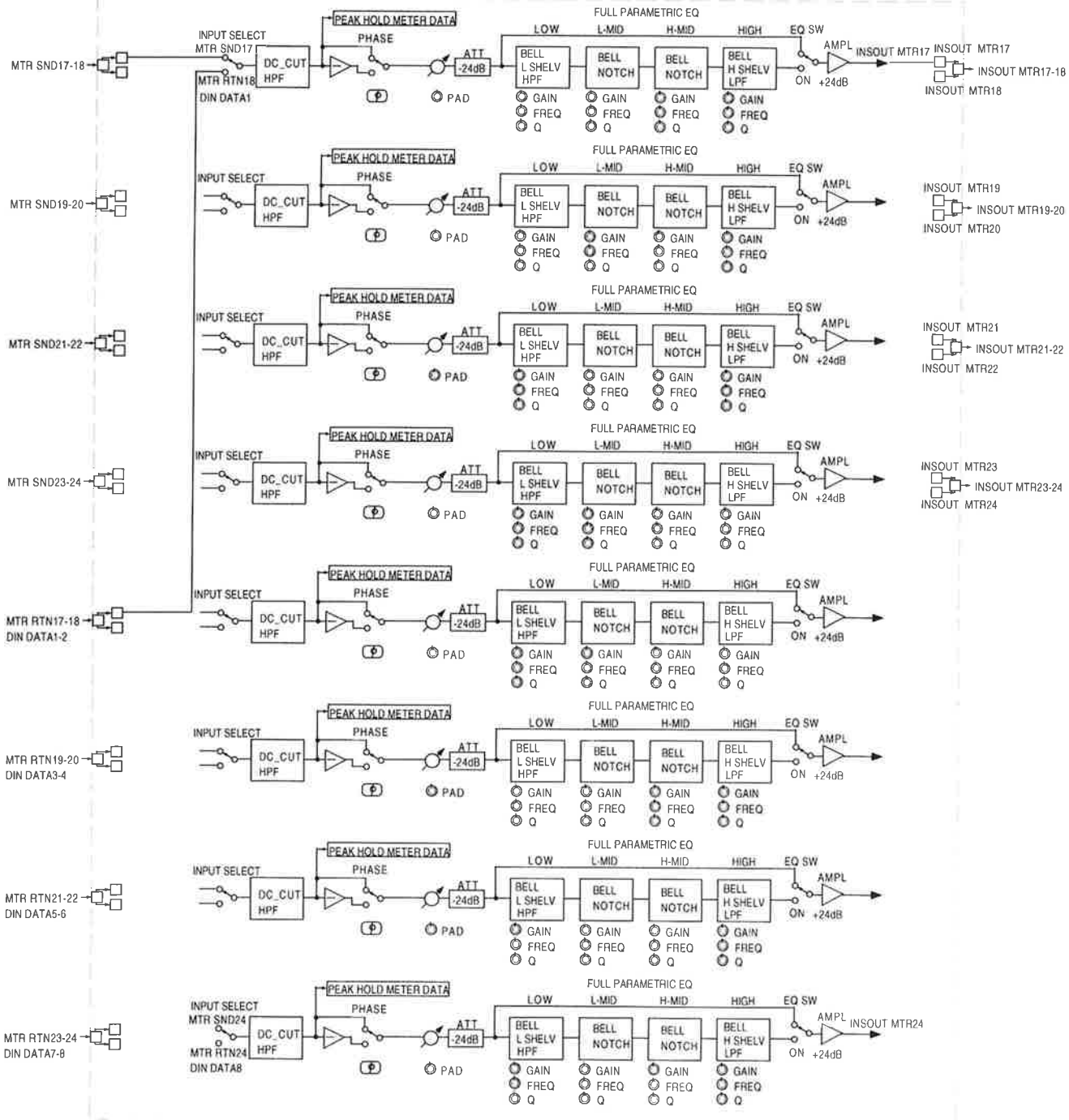
MTR SND17-18
INPUT SELECT
MTR SND17
MTR RTN18
DIN DATA1
DC_CUT HPF
PEAK HOLD METER DATA
PHASE
ATT -24dB
PAD
FULL PARAMETRIC EQ
LOW
L-MID
H-MID
HIGH
EQ SW
BELL L SHELV HPF
BELL NOTCH
BELL NOTCH
BELL H SHELV LPF
GAIN
FREQ
Q
ON
AMPL +24dB
INSOUT MTR17
INSOUT MTR17
INSOUT MTR17-18
INSOUT MTR18
MTR SND19-20
INSOUT MTR19
INSOUT MTR19-20
INSOUT MTR20
MTR SND21-22
INSOUT MTR21
INSOUT MTR21-22
INSOUT MTR22
MTR SND23-24
INSOUT MTR23
INSOUT MTR23-24
INSOUT MTR24
MTR RTN17-18
DIN DATA1-2
MTR RTN19-20
DIN DATA3-4
MTR RTN21-22
DIN DATA5-6
MTR RTN23-24
DIN DATA7-8
INSOUT MTR24

DSP-B1A

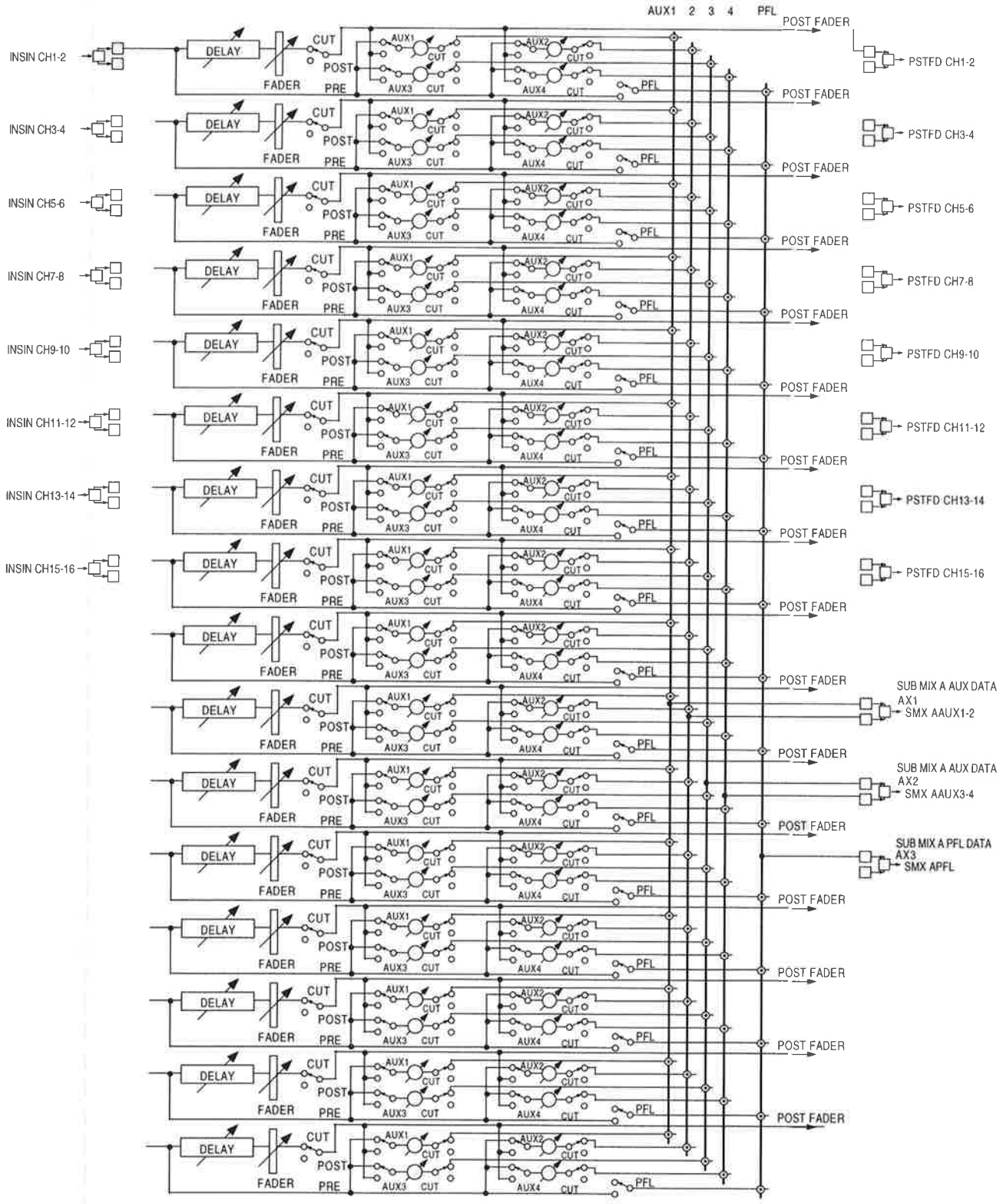
AUX1 2 3 4 PFL
INSIN CH1-2
INSIN CH3-4
INSIN CH5-6
INSIN CH7-8
INSIN CH9-10
INSIN CH11-12
INSIN CH13-14
INSIN CH15-16
DELAY
FADER
CUT
POST
PRE
AUX1
AUX2
AUX3
AUX4
PFL
POST FADER
PSTFD CH1-2
PSTFD CH3-4
PSTFD CH5-6
PSTFD CH7-8
PSTFD CH9-10
PSTFD CH11-12
PSTFD CH13-14
PSTFD CH15-16
SUB MIX A AUX DATA
AX1
SMX AAUX1-2
SUB MIX A AUX DATA
AX2
SMX AAUX3-4
SUB MIX A PFL DATA
AX3
SMX APFL

DSP-B1B

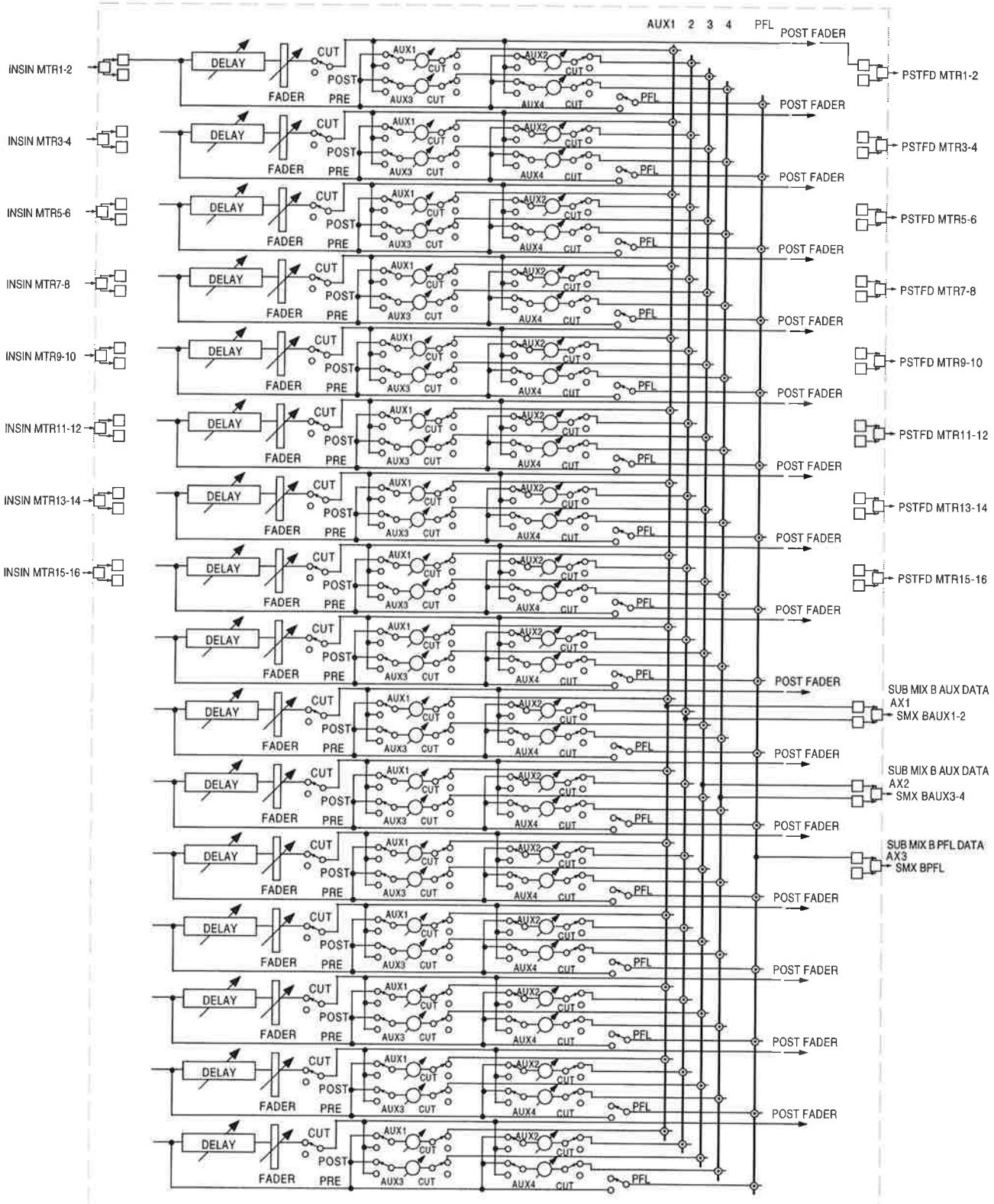
AUX1 2 3 4
PFL
POST FADER
INSIN MTR1-2
INSIN MTR3-4
INSIN MTR5-6
INSIN MTR7-8
INSIN MTR9-10
INSIN MTR11-12
INSIN MTR13-14
INSIN MTR15-16
DELAY
FADER
CUT
POST
PRE
AUX1
AUX2
AUX3
AUX4
PFL
PSTFD MTR1-2
PSTFD MTR3-4
PSTFD MTR5-6
PSTFD MTR7-8
PSTFD MTR9-10
PSTFD MTR11-12
PSTFD MTR13-14
PSTFD MTR15-16
SUB MIX B AUX DATA AX1
SMX BAUX1-2
SUB MIX B AUX DATA AX2
SMX BAUX3-4
SUB MIX B PFL DATA AX3
SMX BPFL

DSP-B2

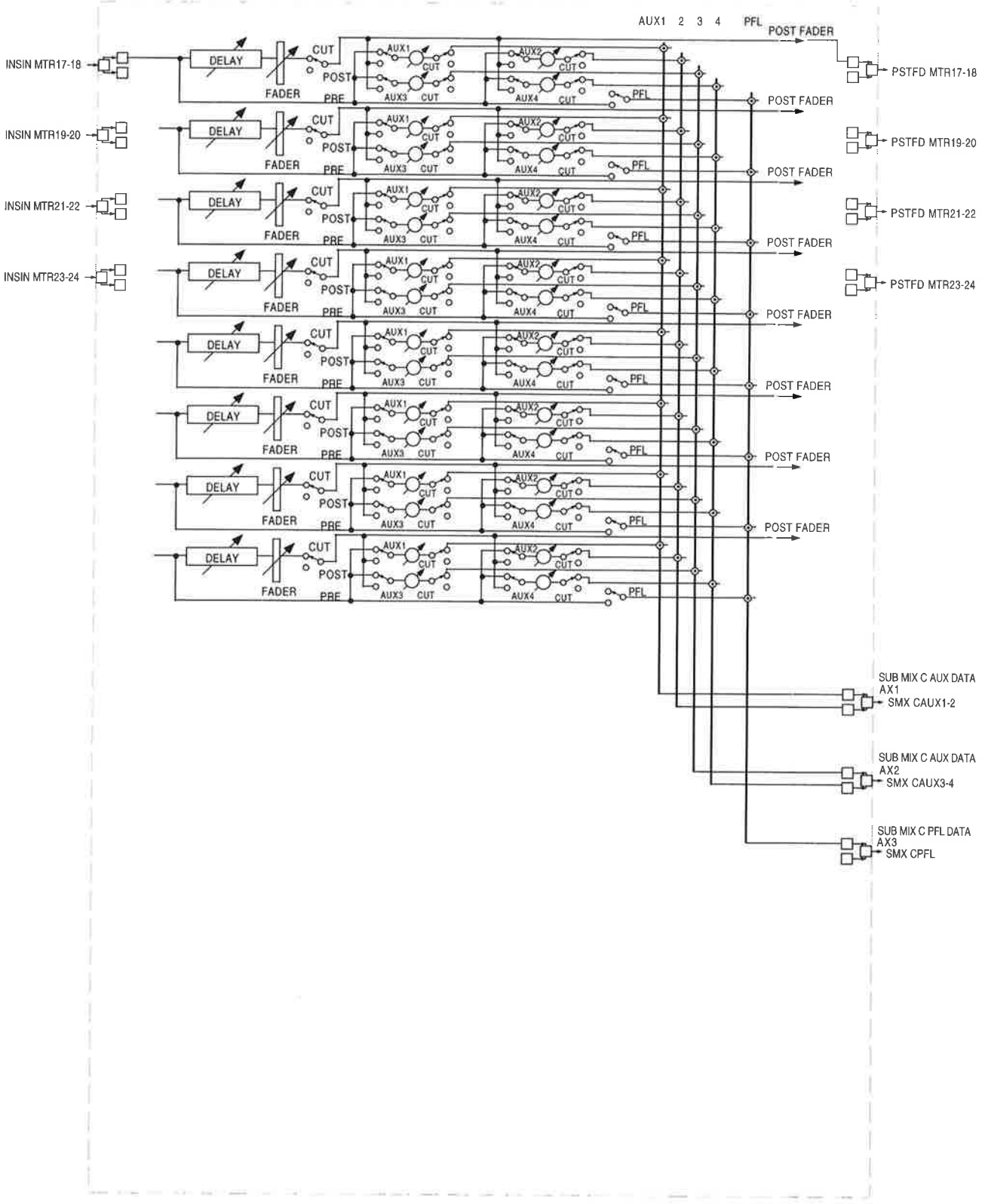
AUX1 2 3 4
PFL
POST FADER
INSIN MTR17-18
INSIN MTR19-20
INSIN MTR21-22
INSIN MTR23-24
DELAY
FADER
CUT
POST
PRE
AUX1
AUX2
AUX3
AUX4
PFL
PSTFD MTR17-18
PSTFD MTR19-20
PSTFD MTR21-22
PSTFD MTR23-24
SUB MIX C AUX DATA
AX1
SMX CAUX1-2
SUB MIX C AUX DATA
AX2
SMX CAUX3-4
SUB MIX C PFL DATA
AX3
SMX CPFL

DSP-C1

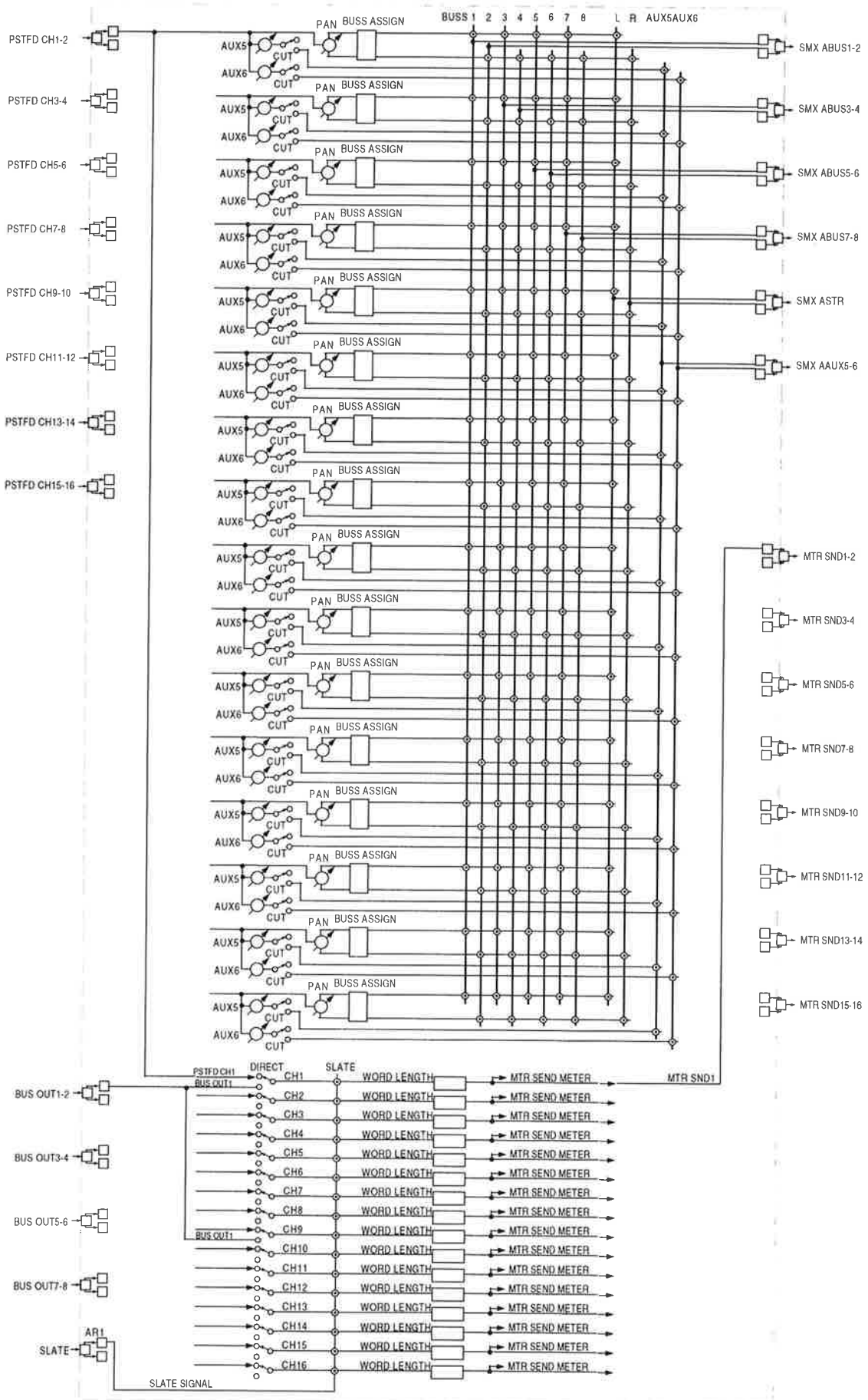
PSTFD CH1-2
PSTFD CH3-4
PSTFD CH5-6
PSTFD CH7-8
PSTFD CH9-10
PSTFD CH11-12
PSTFD CH13-14
PSTFD CH15-16
PAN
BUSS ASSIGN
AUX5
AUX6
CUT
BUSS 1 2 3 4 5 6 7 8 L R AUX5AUX6
SMX ABUS1-2
SMX ABUS3-4
SMX ABUS5-6
SMX ABUS7-8
SMX ASTR
SMX AAUX5-6
MTR SND1-2
MTR SND3-4
MTR SND5-6
MTR SND7-8
MTR SND9-10
MTR SND11-12
MTR SND13-14
MTR SND15-16
BUS OUT1-2
BUS OUT3-4
BUS OUT5-6
BUS OUT7-8
SLATE
AR1
PSTFD CH1
BUS OUT1
DIRECT
SLATE
CH1
CH2
CH3
CH4
CH5
CH6
CH7
CH8
CH9
CH10
CH11
CH12
CH13
CH14
CH15
CH16
WORD LENGTH
MTR SEND METER
MTR SND1
SLATE SIGNAL

DSP-C2

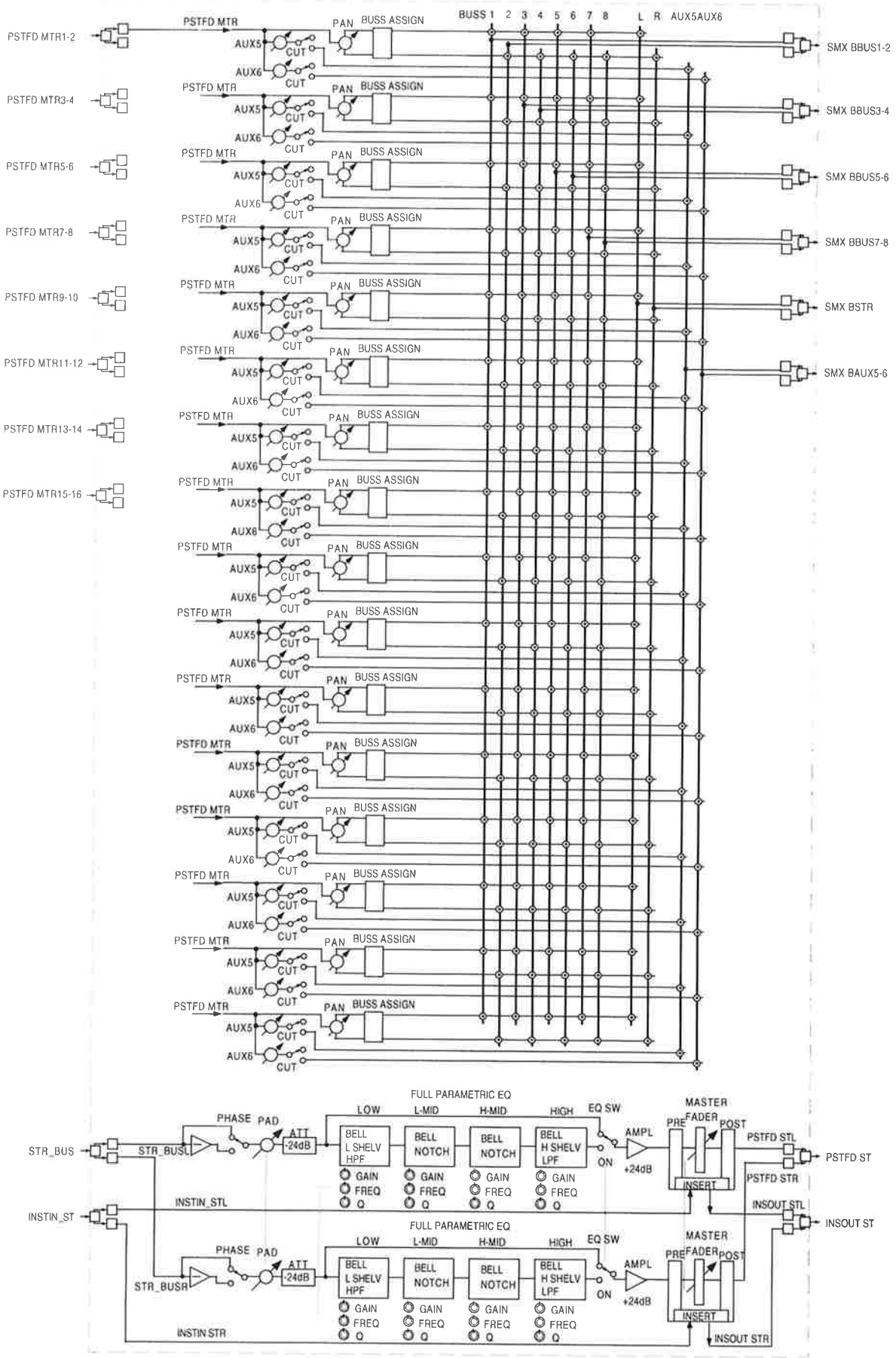
PSTFD MTR1-2
PSTFD MTR3-4
PSTFD MTR5-6
PSTFD MTR7-8
PSTFD MTR9-10
PSTFD MTR11-12
PSTFD MTR13-14
PSTFD MTR15-16
PSTFD MTR
PAN
BUSS ASSIGN
AUX5
AUX6
CUT
BUSS 1 2 3 4 5 6 7 8 L R AUX5AUX6
SMX BBUS1-2
SMX BBUS3-4
SMX BBUS5-6
SMX BBUS7-8
SMX BSTR
SMX BAUX5-6
STR_BUS
STR_BUSL
STR_BUSR
PHASE
PAD
ATT
-24dB
FULL PARAMETRIC EQ
LOW
L-MID
H-MID
HIGH
EQ SW
BELL L SHELV HPF
BELL NOTCH
BELL H SHELV LPF
GAIN
FREQ
Q
ON
AMPL
+24dB
MASTER FADER
PRE
POST
INSERT
PSTFD STL
PSTFD STR
PSTFD ST
INSTIN_ST
INSTIN_STL
INSTIN STR
INSOUT STL
INSOUT STR
INSOUT ST

DSP-C3

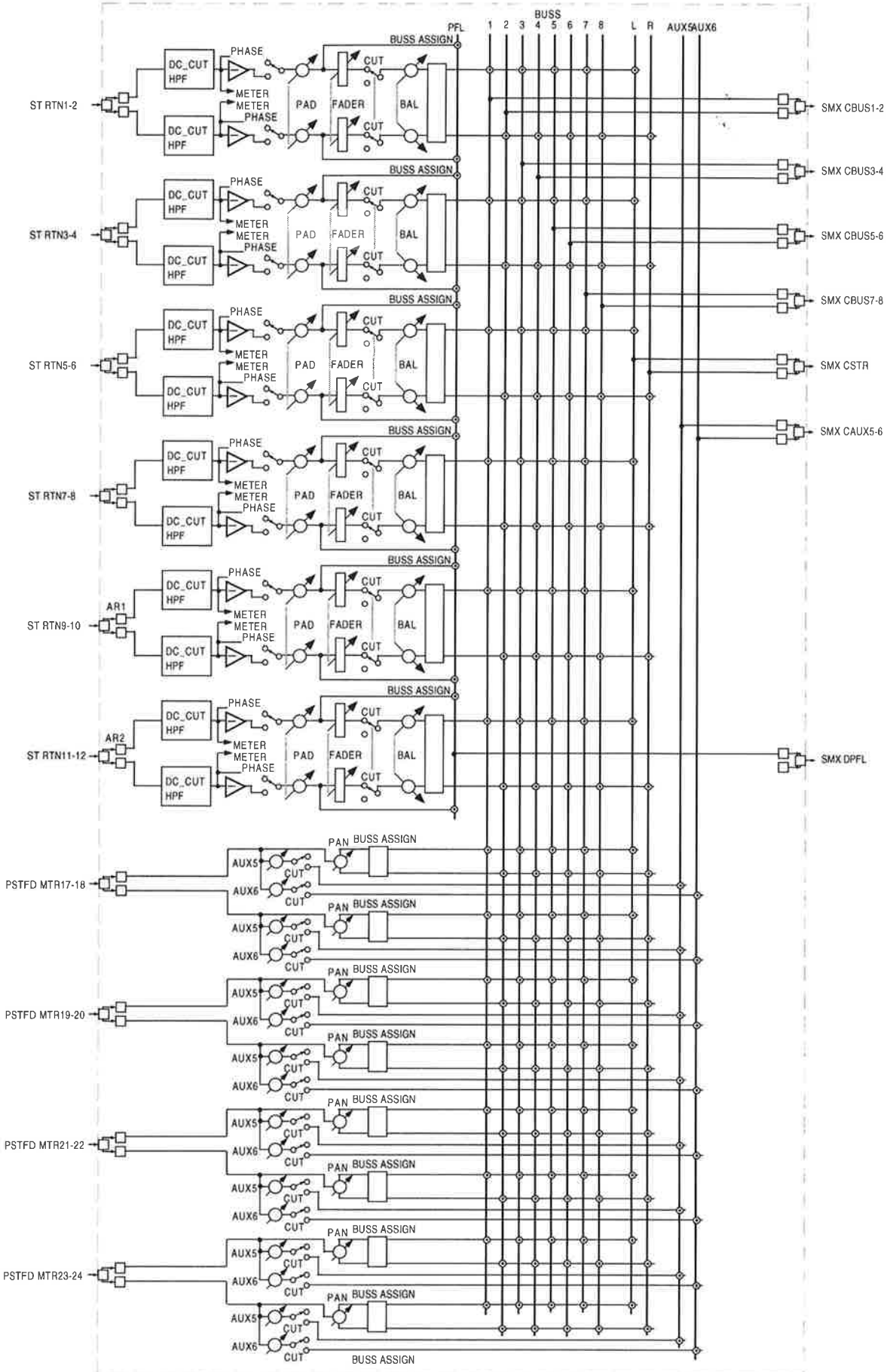
BUSS
PFL
1 2 3 4 5 6 7 8 L R AUX5 AUX6
BUSS ASSIGN
DC_CUT HPF
PHASE
METER
METER
PHASE
PAD
FADER
CUT
BAL
ST RTN1-2
ST RTN3-4
ST RTN5-6
ST RTN7-8
ST RTN9-10
ST RTN11-12
AR1
AR2
SMX CBUS1-2
SMX CBUS3-4
SMX CBUS5-6
SMX CBUS7-8
SMX CSTR
SMX CAUX5-6
SMX DPFL
PAN
AUX5
AUX6
PSTFD MTR17-18
PSTFD MTR19-20
PSTFD MTR21-22
PSTFD MTR23-24

DSP-D

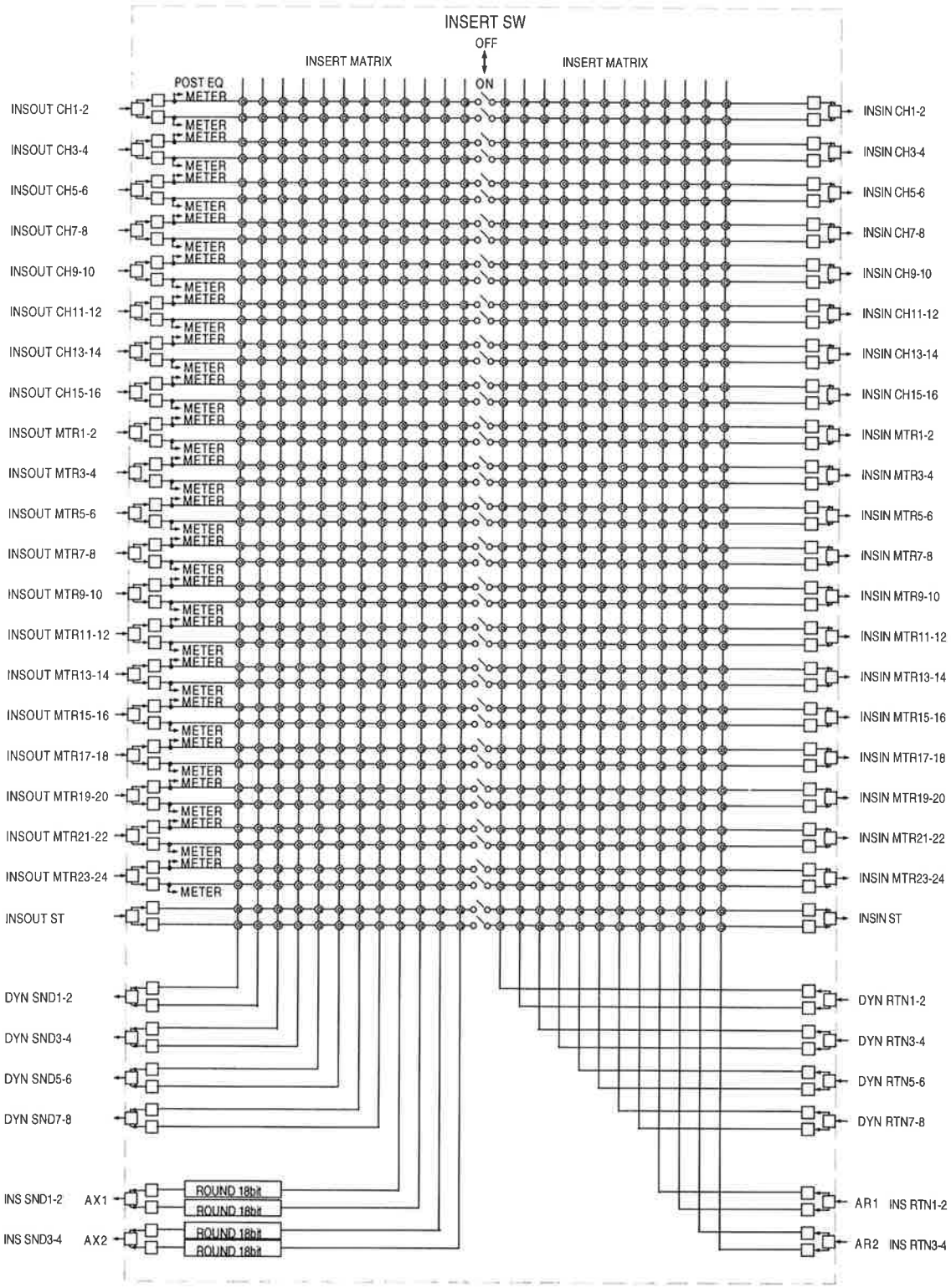
INSERT SW
OFF
ON
INSERT MATRIX
INSERT MATRIX
POST EQ
METER
INSOUT CH1-2
INSOUT CH3-4
INSOUT CH5-6
INSOUT CH7-8
INSOUT CH9-10
INSOUT CH11-12
INSOUT CH13-14
INSOUT CH15-16
INSOUT MTR1-2
INSOUT MTR3-4
INSOUT MTR5-6
INSOUT MTR7-8
INSOUT MTR9-10
INSOUT MTR11-12
INSOUT MTR13-14
INSOUT MTR15-16
INSOUT MTR17-18
INSOUT MTR19-20
INSOUT MTR21-22
INSOUT MTR23-24
INSOUT ST
INSIN CH1-2
INSIN CH3-4
INSIN CH5-6
INSIN CH7-8
INSIN CH9-10
INSIN CH11-12
INSIN CH13-14
INSIN CH15-16
INSIN MTR1-2
INSIN MTR3-4
INSIN MTR5-6
INSIN MTR7-8
INSIN MTR9-10
INSIN MTR11-12
INSIN MTR13-14
INSIN MTR15-16
INSIN MTR17-18
INSIN MTR19-20
INSIN MTR21-22
INSIN MTR23-24
INSIN ST
DYN SND1-2
DYN SND3-4
DYN SND5-6
DYN SND7-8
DYN RTN1-2
DYN RTN3-4
DYN RTN5-6
DYN RTN7-8
INS SND1-2
AX1
INS SND3-4
AX2
ROUND 18bit
AR1
INS RTN1-2
AR2
INS RTN3-4

DSP-E

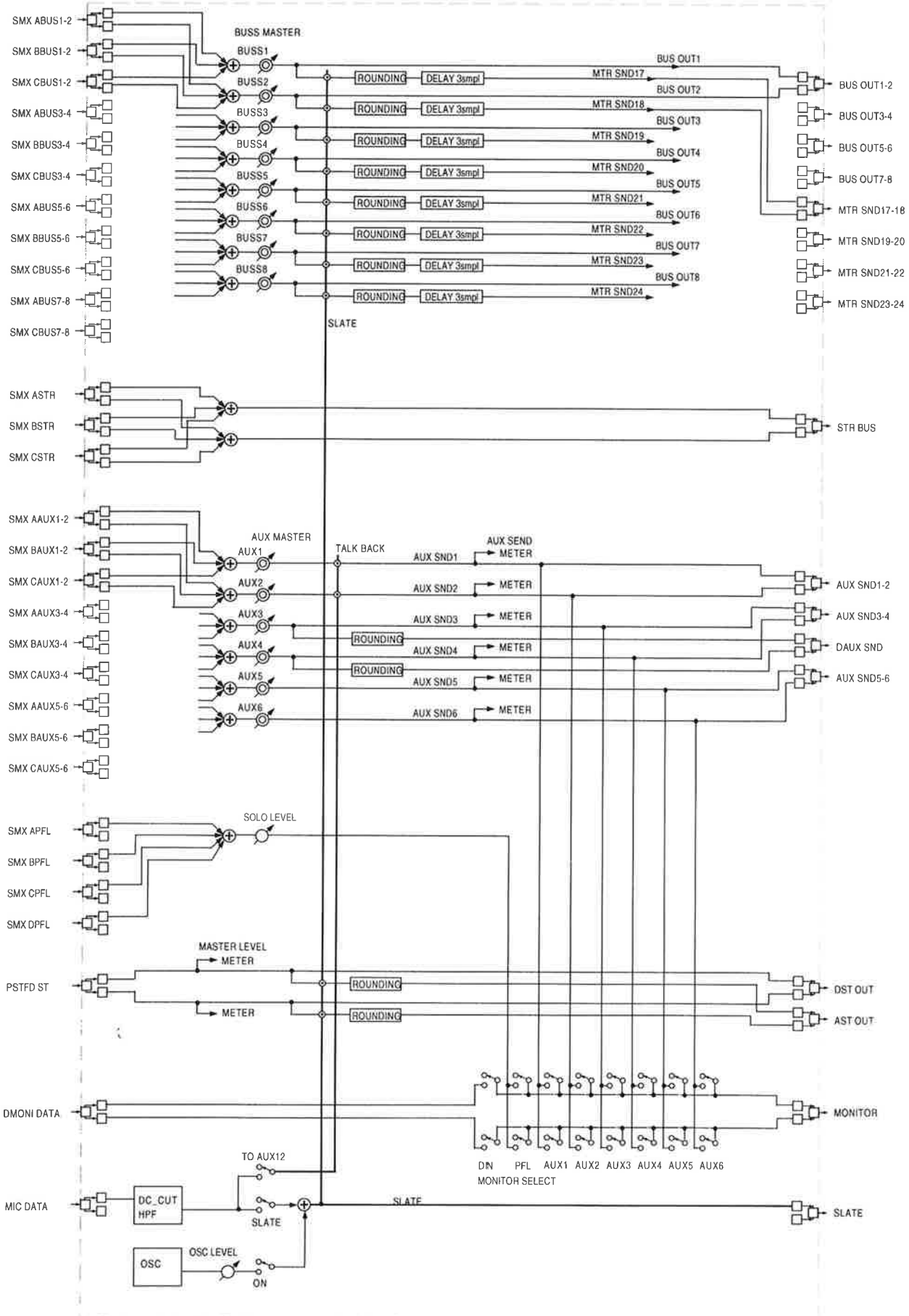
SMX ABUS1-2
SMX BBUS1-2
SMX CBUS1-2
SMX ABUS3-4
SMX BBUS3-4
SMX CBUS3-4
SMX ABUS5-6
SMX BBUS5-6
SMX CBUS5-6
SMX ABUS7-8
SMX CBUS7-8
BUSS MASTER
BUSS1
BUSS2
BUSS3
BUSS4
BUSS5
BUSS6
BUSS7
BUSS8
ROUNDING
DELAY 3smpl
MTR SND17
MTR SND18
MTR SND19
MTR SND20
MTR SND21
MTR SND22
MTR SND23
MTR SND24
BUS OUT1
BUS OUT2
BUS OUT3
BUS OUT4
BUS OUT5
BUS OUT6
BUS OUT7
BUS OUT8
BUS OUT1-2
BUS OUT3-4
BUS OUT5-6
BUS OUT7-8
MTR SND17-18
MTR SND19-20
MTR SND21-22
MTR SND23-24
SLATE
SMX ASTR
SMX BSTR
SMX CSTR
STR BUS
SMX AAUX1-2
SMX BAUX1-2
SMX CAUX1-2
SMX AAUX3-4
SMX BAUX3-4
SMX CAUX3-4
SMX AAUX5-6
SMX BAUX5-6
SMX CAUX5-6
AUX MASTER
AUX1
AUX2
AUX3
AUX4
AUX5
AUX6
TALK BACK
AUX SEND
METER
AUX SND1
AUX SND2
AUX SND3
AUX SND4
AUX SND5
AUX SND6
AUX SND1-2
AUX SND3-4
DAUX SND
AUX SND5-6
SMX APFL
SMX BPFL
SMX CPFL
SMX DPFL
SOLO LEVEL
MASTER LEVEL
PSTFD ST
DST OUT
AST OUT
DMONI DATA
MONITOR
DIN
PFL
AUX1
AUX2
AUX3
AUX4
AUX5
AUX6
MONITOR SELECT
TO AUX12
MIC DATA
DC_CUT
HPF
SLATE
OSC
OSC LEVEL
ON

PARTS LIST SECTION

CONTENTS 目次

EXPLODED VIEWS AND PARTS LIST 74
- EXPLODED VIEW-1 ..... 74/75
- INCLUDED ACCESSORIES 75
- EXPLODED VIEW-2 ..... 76/77
- EXPLODED VIEW-3 ..... 78/79
- EXPLODED VIEW-4 ..... 80/81
- EXPLODED VIEW-5 ..... 82/83
- EXPLODED VIEW-6 ..... 84/85

PC BOARDS AND PARTS LIST 86
- AUX SND PCB 86/106
- MX INS PCB 86/106
- PANEL CPU PCB 87/106
- MODULE PCB 88,89/106
- MIX PCB 90,91/108
- MONITOR PCB 92/108
- AUX MOTHER PCB 93/109
- AD PCB 94/109
- MAIN CPU PCB 95/109
- RS PCB 95/110
- MSTR MT PCB 96/110
- MODE PCB 96/110
- JOG PCB 96/110
- ST RTN PCB 97/110
- INPUT A PCB 97/111
- MSTR FDR PCB 97/111
- VR PCB 97/111
- L FADER PCB 98/111
- S FADER PCB 98/111
- DSUB PCB 98/111
- LCD VR PCB 98/111
- SOLO VR PCB 98/111
- XLR PCB 98/111
- HP PCB 98/111
- POD PCB 99/111
- TRANSPORT PCB 100/112
- INPUT MT PCB 101/112
- 2TR IN PCB 101/112
- INPUT SW PCB 102/112
- LCD PCB 102/112
- LCD ACCESS PCB 103/112
- MSTR FDR SW PCB 103/112
- CUT GROUP PCB 104/112
- MONITOR SW PCB 104/113
- PW CNT PCB 105/113
- PW SW PCB 105/113

NOTES

- PC boards shown are viewed from parts side.
- Parts marked with require longer delivery time.
- The parts with no reference number or no parts number in the exploded views are not supplied.
- As regards the resistors and capacitors, refer to the circuit diagrams contained in the manual.
- ⚠Parts marked with this sign are safety critical components. They must be replaced with identical components - refer to the appropriate parts list and ensure exact replacement.
- Parts of [ ] mark can be used only with the version designated.
  [J] : JAPAN [US/C] : U.S.A./CANADA [E] : EUROPE
  [UK] : U. K. [A] : AUSTRALIA

注 意

- プリント基板は部品面が示されています。
- ＊印の部品は納期が若干かかります。
  あらかじめご了承ください。
- 分解図に部番のない部品及び品番のない部品は供給しません。
- 標準の抵抗、コンデンサーは省略してあります。
  回路図を参照してください。
- ⚠は安全重要部品です。
  交換する時は必ずティアック指定の部品を使用してください。
- 仕向先
  [J] : JAPAN [US/C] : U.S.A./CANADA [E] : EUROPE
  [UK] : U. K. [A] : AUSTRALIA

14. EXPLODED VIEWS AND PARTS LIST

分解図とパーツリスト

EXPLODED VIEW-1

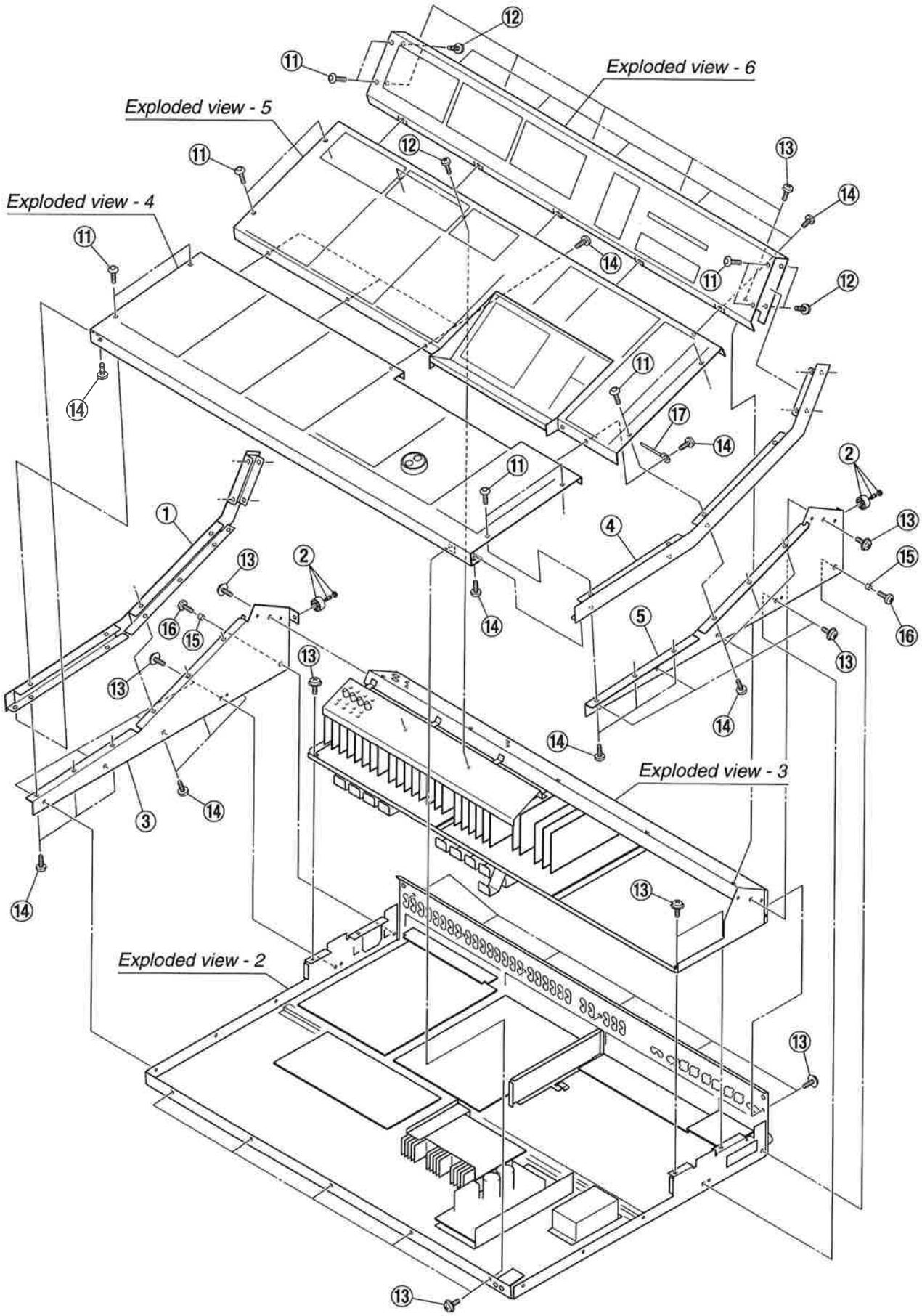

EXPLODED VIEW-1

REF. NO.	PARTS NO.	DESCRIPTION	REMARKS
1- 1	*M00626500A	SIDE PNL ASSY, L	
1- 2	5730003000	FOOT, FF-004	
1- 3	*M00627900A	SIDE CHASSIS, L	
1- 4	*M00626600A	SIDE PANEL ASSY, R	
1- 5	*M00628000A	SIDE CHASSIS, R	
1-11	*5781724008	BOLT, HEXAGON HOLE M4X8	
1-12	*5780023006	SCREW, BIND M3X6 (BLK NI)	
1-13	*5783904006	SCREW, BIND M4X6 (BLK NI)	
1-14	*5783824008	SCREW, BIND B-TITE M4X8 (BLK NI)	
1-15	*M0053740	SPACER, 4X2	
1-16	*5780024006	SCREW, BIND M4X6 (BLK NI)	
1-17	*5786713100	CLIP, HARNESS 3.3X6.0X54	

INCLUDED ACCESSORIES

REF. NO.	PARTS NO.	DESCRIPTION	REMARKS
	*D00357700A	OWNER'S MANUAL, TUTORIAL [EXCEPT J]	ENGLISH
	*D00357800A	OWNER'S MANUAL, TUTORIAL [E]	FRENCH
	*D00357900A	OWNER'S MANUAL, TUTORIAL [E]	GERMAN
	*D00358000A	OWNER'S MANUAL, TUTORIAL [E]	ITALIAN
	*D00365200A	OWNER'S MANUAL, REFERENCE [J]	JAPANESE
	*D00365300A	OWNER'S MANUAL, REFERENCE [EXCEPT J]	ENGLISH
	*D00365900A	OWNER'S MANUAL, AUTOMATION [J]	JAPANESE
	*T00041000A	SOFTWARE, TM-D AUTO 1.00	
⚠	15922303	AC CORD [E]	
⚠	5350014800	AC CORD [J]	
⚠	5350018500	AC CORD (13A FUSE) [UK]	
⚠	5350018600	AC CORD [A]	
⚠	5350018800	AC CORD [US/C]	

EXPLODED VIEW-2

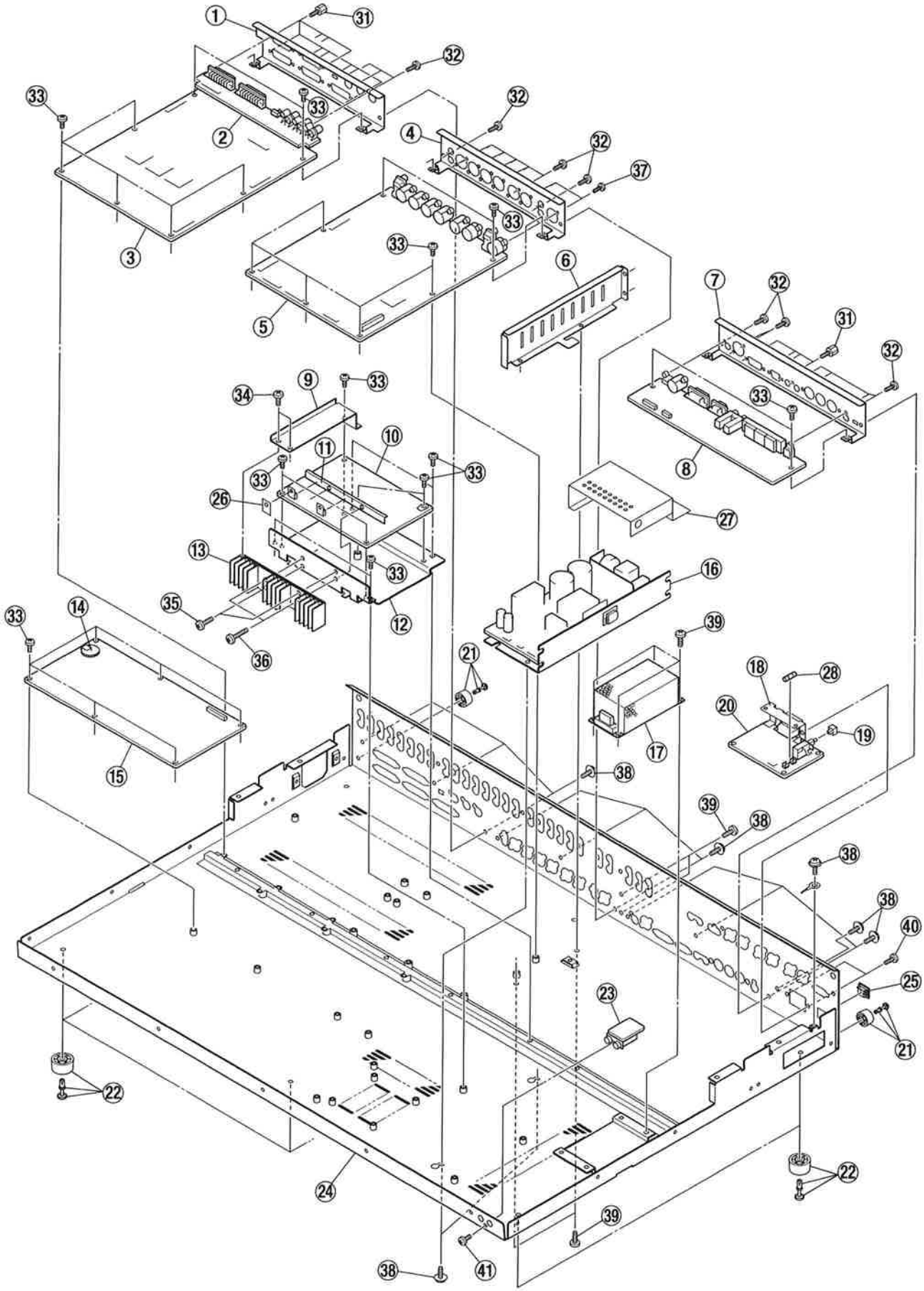

EXPLODED VIEW-2

REF. NO.	PARTS NO.	DESCRIPTION	REMARKS
2- 1	*M00629000A	BRACKET, MODULE	
2- 2	*E95058800A	PCB ASSY, DSUB	
2- 3	*E95059400A	PCB ASSY, MODULE	
2- 4	*M00629100A	BRACKET, MIX	
2- 5	*E95059500A	PCB ASSY, MIX	
2- 6	*M00653100A	FRAME, BOTTOM	
2- 7	*M00629200A	BRACKET, RS	
2- 8	*E95058700A	PCB ASSY, RS	
2- 9	*M00689800A	SUPPORT, TOP	
2-10	*E95059200A	PCB ASSY, PW CNT	
2-11	*M00633800B	BRACKET, REG	
2-12	*M00629800A	HEATSINK, PWCNT	
2-13	*M00633700A	HEATSINK, REG	
2-14	5347013100	BATTERY, LITHIUM CR2430-FT10	
2-15	*E95059600A	PCB ASSY, MAIN CPU	
2-16	*M00689000A	POWER SUPPLY ASSY [J, US/C]	
	*M00689040A	POWER SUPPLY ASSY [E, UK, A]	
2-17	E0039290	FILTER, GF112R7 [J]	
	E0039300	FILTER, GF121R0 [E, UK, A]	
2-18	M00629300A	BRACKET, PWSW	
2-19	1678822807	BUTTON, POWER	
2-20	*E95059100A	PCB ASSY, PW SW	
2-21	5730002900	FOOT, FF-001	
2-22	M0001840	FOOT, FF015	
2-23	*E95058900A	PCB ASSY, HP	
2-24	*M00628700B	BOTTOM ASSY	
2-25	*5801486601	ESCUTCHEON, D P-N15-A	
2-26	*M0004570	SHEET, RADIATOR D	
2-27	M00681700A	COVER, PWR [E, UK, A]	
2-28	⚠ 5307050800	FUSE, 5A SLOW BLOW [J, US/C]	
	⚠ 5307053500	FUSE, 5A TIME LAG [E, UK, A]	
2-31	*5801536400	SCREW, DSUB LOCK M2.6X0.45	
2-32	*5783543008	SCREW, BIND P-TM3X8 (BLK NI)	
2-33	*5780003006	SCREW, BIND M3X6	
2-34	*5783694006	SCREW, BIND S-TITE M4X6 (BLK NI)	
2-35	*5783534010	SCREW, BIND B-TITE M4X10 (BLK NI)	
2-36	*5780004016	SCREW, BIND M4X16	
2-37	*5783732605	SCREW, BIND B-TITE M2.6X5	
2-38	*5783904006	SCREW, BIND M4X6 (BLK NI)	
2-39	*5783824008	SCREW, BIND B-TIM4X8 (BLK NI)	
2-40	*5780023006	SCREW, BIND M3X6 (BLK NI)	
2-41	*5783543008	SCREW, BIND P-TITE M3X8 (BLK NI)	

EXPLODED VIEW-3

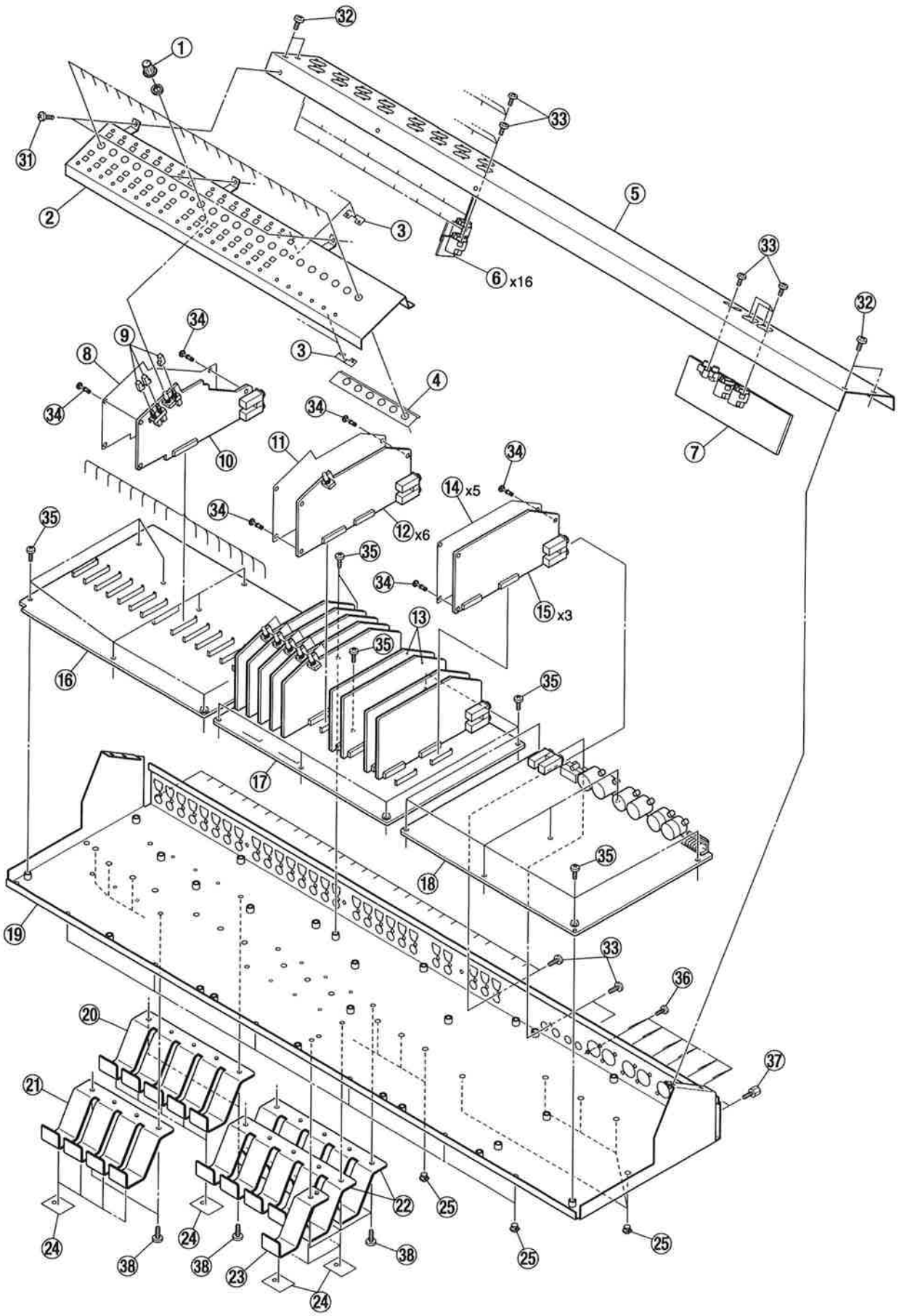

EXPLODED VIEW-3

REF. NO.	PARTS NO.	DESCRIPTION	REMARKS
3- 1	5801631800	R-VR KNOB, N61/N66	
3- 2	*M00628500A	PANEL, TRIM	
3- 3	*M00678800A	LENS, LED	
3- 4	*M00703500A	BRACKET, TRIM B	
3- 5	*M00628600A	PANEL, JACK	
3- 6	*E95067300A	PCB ASSY, XLR	
3- 7	*E95058000A	PCB ASSY, 2TR IN	
3- 8	*M00681600A	VINYL SHEET, INPUT A	
3- 9	M00063800A	BUTTON, OFFSET WHT/N63	
3-10	*E95057400A	PCB ASSY, INPUT A	
3-11	*M00629900A	VINYL SHEET, INPUT	
3-12	*E95057700A	PCB ASSY, ST RTN	
3-13	*E95057900A	PCB ASSY, MX INS	
3-14	*M00630000A	VINYL SHEET, AUX	
3-15	*E95058200A	PCB ASSY, AUX SND	
3-16	*E95058400A	PCB ASSY, AD	
3-17	*E95058500A	PCB ASSY, AUX MOTHER	
3-18	*E95058600A	PCB ASSY, MONITOR	
3-19	*M00628400A	SUB CHASSIS	
3-20	*M00629500A	HEATSINK, B	
3-21	*M00629600A	HEATSINK, C	
3-22	*M00629400A	HEATSINK, A	
3-23	*M00629700A	HEATSINK, D	
3-24	*M0004570	SHEET, RADIATOR D	
3-25	*M0063480	SPACER, RSPS-5	
3-31	*5780003004	SCREW, BIND M3X4	
3-32	*5783694006	SCREW, BIND S-TITE M4X6 (BLK NI)	
3-33	*5783543008	SCREW, BIND P-TITE M3X8 (BLK NI)	
3-34	*5786610100	RIVET, PUSH RP-3035-NB	
3-35	*5780003004	SCREW, BIND M3X4	
3-36	*5783732605	SCREW, BIND B-TITE M2.6X5	
3-37	*5801536400	SCREW, DSUB LOCK M2.6X0.45	
3-38	*5783904006	SCREW, BIND M4X6 (BLK NI)	

EXPLODED VIEW-4

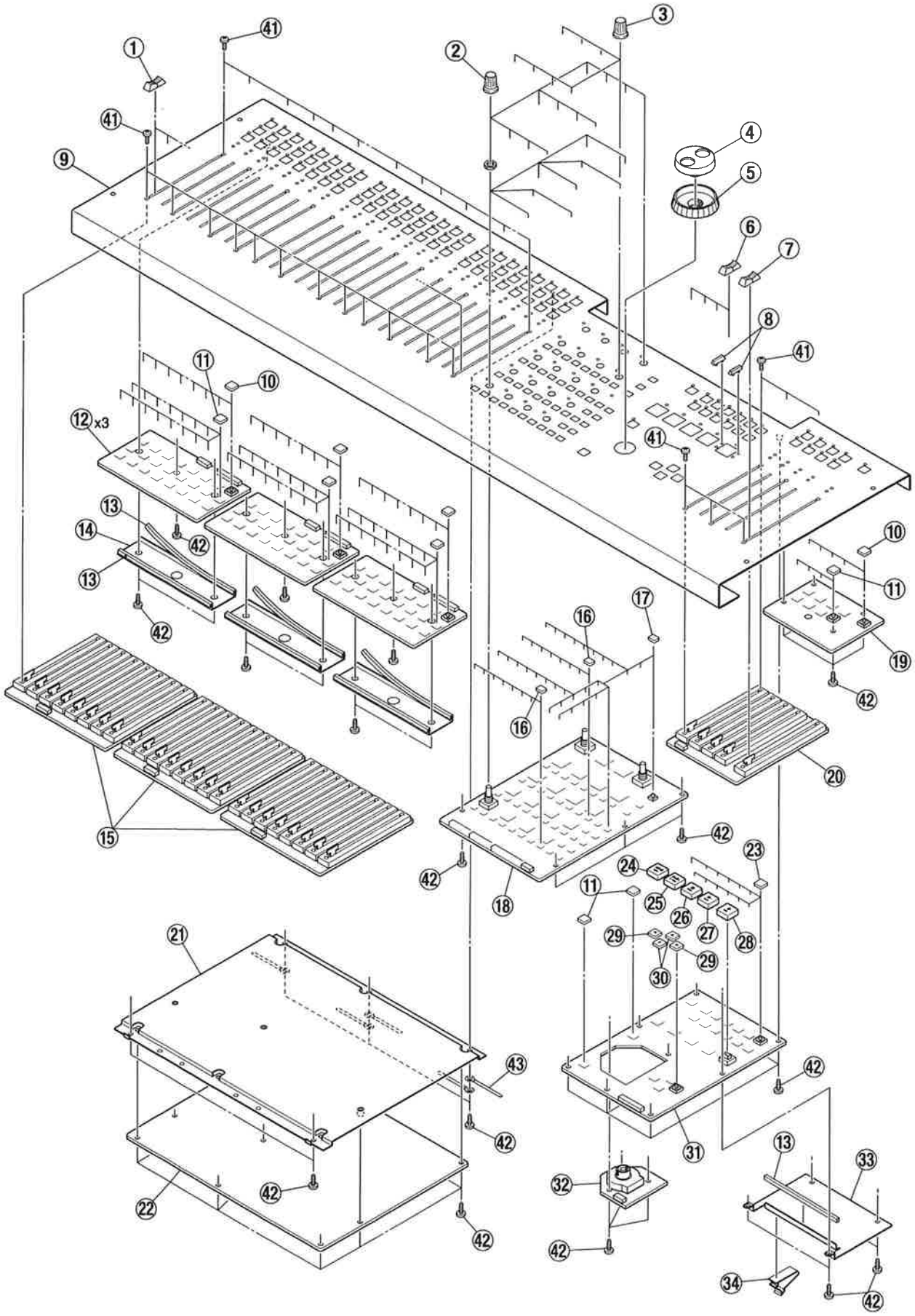

EXPLODED VIEW-4

REF. NO.	PARTS NO.	DESCRIPTION	REMARKS
4- 1	5801632100	S-VR KNOB, N61/N66	
4- 2	M00630600A	KNOB, POD N61	
4- 3	M00630601A	KNOB, POD N63	
4- 4	M00001801A	KNOB, JOG N61	
4- 5	M00001901A	KNOB, SHUTTLE N61	
4- 6	5801632300	S-VR KNOB, N63/N66	
4- 7	M00103701A	KNOB, S-VR R21/WHT	
4- 8	*M00207800A	ESCUTCHEON, GUARD	
4- 9	*M00636500A	TOP PNL ASSY, C	
4-10	M00238903A	BUTTON, 10X10 N64	
4-11	M00238901A	BUTTON, 10X10 N61	
4-12	*E95055100A	PCB ASSY, INPUT SW	
4-13	*16322572	EDGING, EO-10N	
4-14	*M00632400A	BRACKET, INPUT SW	
4-15	*E95055200A	PCB ASSY, L FADER	
4-16	M00630700A	BUTTON, 6.4X8.4 N61	
4-17	M00630701A	BUTTON, 6.4X8.4 N63	
4-18	*E95056600A	PCB ASSY, POD	
4-19	*E95056100A	PCB ASSY, MSTR FDR SW	
4-20	*E95055500A	PCB ASSY, MSTR FDR	
4-21	*M00647400A	FRAME, PCPU	
4-22	*E95057300A	PCB ASSY, PANEL CPU	
4-23	M00238900A	BUTTON, 10X10 N63	
4-24	M00207500A	BUTTON, S REW	
4-25	M00207600A	BUTTON, S FF	
4-26	M00207300A	BUTTON, S STOP	
4-27	M00207400A	BUTTON, S PLAY	
4-28	M00792600A	BUTTON, REC	
4-29	M00636200A	BUTTON, 10X10 N61 TRI	
4-30	M00636201A	BUTTON, 10X10 N61 TRI U	
4-31	*E95056700A	PCB ASSY, TRANSPORT	
4-32	*E95060400A	PCB ASSY, JOG	
4-33	*M00636700A	BRACKET, TRANSPORT	
4-34	*M0068410	FLA CLIP, D	
4-41	*5801148000	SCREW, BIND M3X4 (BLK)	
4-42	*5780003006	SCREW, BIND M3X6	
4-43	*5786713100	CLIP, HARNESS 3.3X6.0X54	

EXPLODED VIEW-5

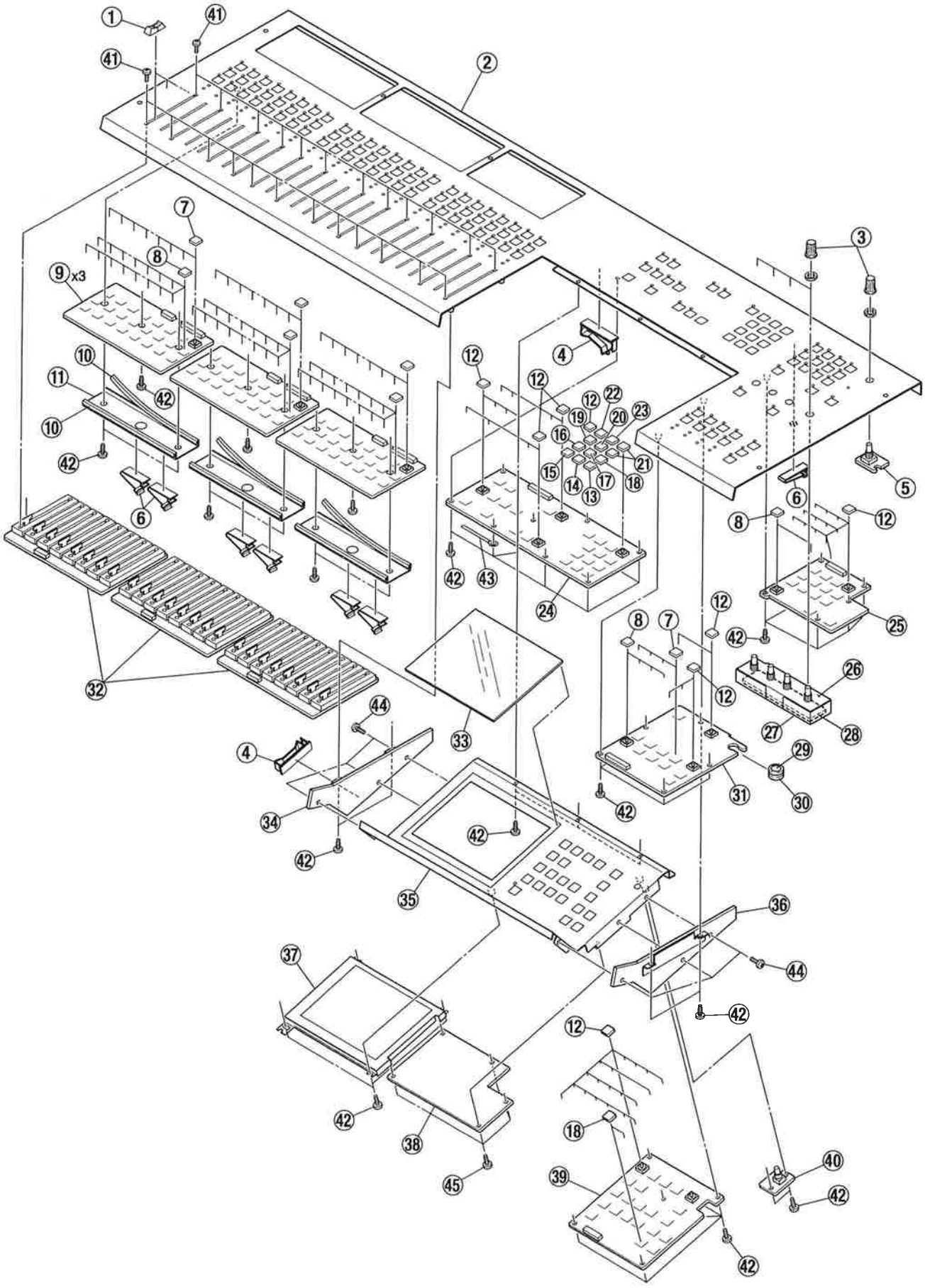

EXPLODED VIEW-5

REF. NO.	PARTS NO.	DESCRIPTION	REMARKS
5- 1	5801632100	S-VR KNOB, N61/N66	
5- 2	*M00680000A	TOP PANEL ASSY, B	
5- 3	5801631800	R-VR KNOB, N61/N66	
5- 4	*M0068400	FLA CLIP, B-4T	
5- 5	*E95055700A	PCB ASSY, SOLO VR	
5- 6	*M0068410	FLA CLIP, D	
5- 7	M00238903A	BUTTON, 10X10 N64	
5- 8	M00238901A	BUTTON, 10X10 N61	
5- 9	*E95055100A	PCB ASSY, INPUT SW	
5-10	*16322572	EDGING, EO-10N	
5-11	*M00632400A	BRACKET, INPUT SW	
5-12	M00238900A	BUTTON, 10X10 N63	
5-13	M00632810A	BUTTON, 10X10 N63 ENT	
5-14	M00632809A	BUTTON, 10X10 N63 CLR	
5-15	M00632800A	BUTTON, 10X10 N63 0	
5-16	M00632801A	BUTTON, 10X10 N63 1	
5-17	M00632802A	BUTTON, 10X10 N63 2	
5-18	M00632803A	BUTTON, 10X10 N63 3	
5-19	M00632804A	BUTTON, 10X10 N63 4	
5-20	M00632805A	BUTTON, 10X10 N63 5	
5-21	M00632806A	BUTTON, 10X10 N63 6	
5-22	M00632807A	BUTTON, 10X10 N63 7	
5-23	M00632808A	BUTTON, 10X10 N63 8	
5-24	*E95056400A	PCB ASSY, MODE	
5-25	*E95055900A	PCB ASSY, MONITOR SW	
5-26	*M00693200A	SHIELD COVER, VR A	
5-27	*M00693300A	SHIELD COVER, VR B	
5-28	E95055600A	PCB ASSY, VR	
5-29	*5347007700	CONDENSOR MIC, WM-034CY	
5-30	*16362570	BUSHING RUBBER, BSB-32 94HB	
5-31	*E95056000A	PCB ASSY, CUT GROUP	
5-32	*E95055300A	PCB ASSY, S FADER	
5-33	*M00630500A	COVER, LCD	
5-34	*M00627400A	FILLER ASSY, L	
5-35	*M00627100A	LCD PANEL ASSY	
5-36	*M00627500A	FILLER ASSY, R	
5-37	*E00372400A	LCD, LM320131-VH	
5-38	*E95056900A	PCB ASSY, LCD	
5-39	*E95057000A	PCB ASSY, LCD ACCESS	
5-40	*E95059900A	PCB ASSY, LCD VR	
5-41	*5801148000	SCREW, BIND M3X4 (BLK)	
5-42	*5780003006	SCREW, BIND M3X6	
5-43	*5786713100	CLIP, HARNESS 3.3X6.0X54	
5-44	*5783823008	SCREW, BIND B-TITE M3X8 (BLK NI)	
5-45	*5780023006	SCREW, BIND M3X6 (BLK NI)	

EXPLODED VIEW-6

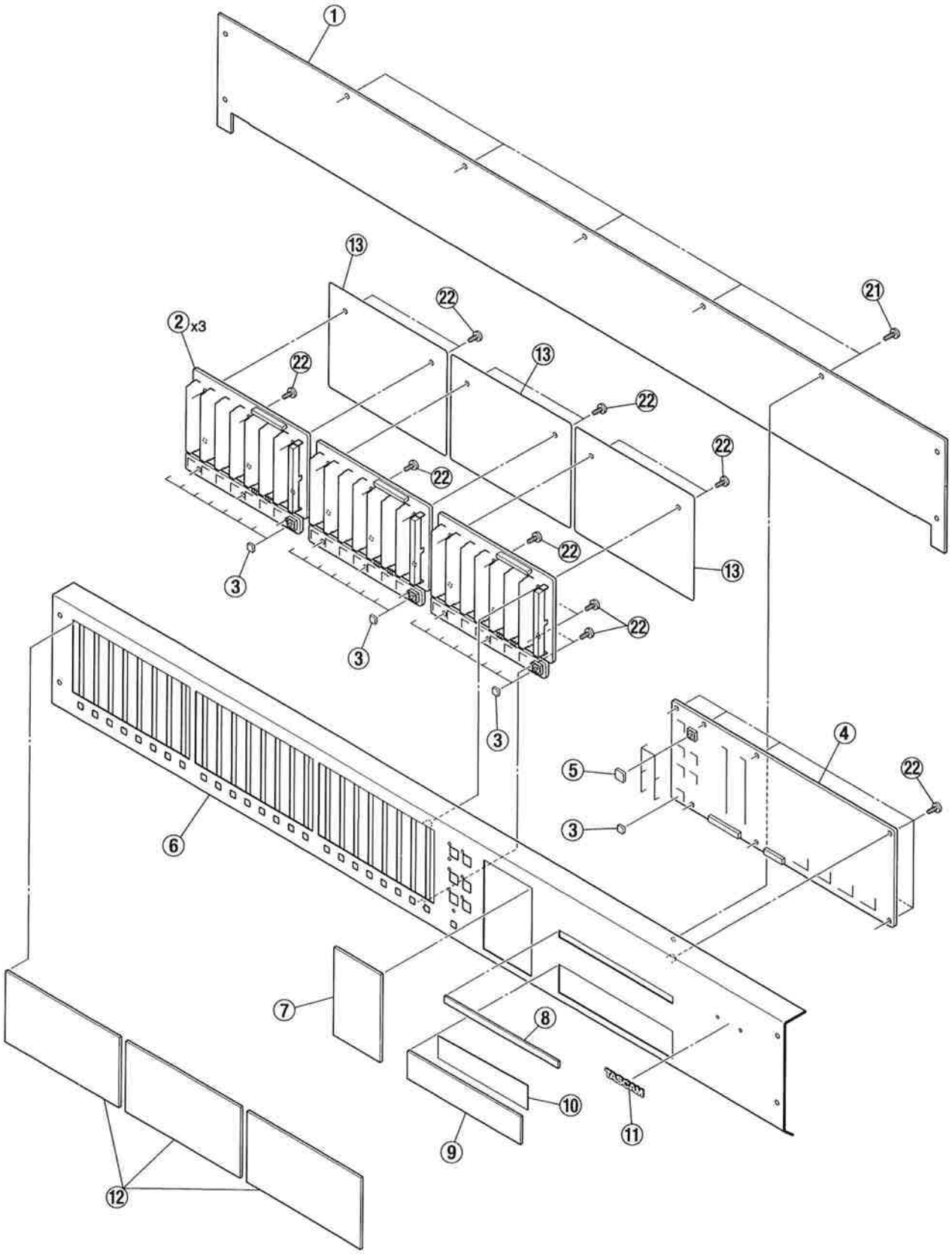

EXPLODED VIEW-6

REF. NO.	PARTS NO.	DESCRIPTION	REMARKS
6- 1	*M00628100A	REAR COVER, MT	
6- 2	*E95057200A	PCB ASSY, INPUT MT	
6- 3	M00632900A	BUTTON, 6X6 N63	
6- 4	*E95056300A	PCB ASSY, MSTR MT	
6- 5	M00238900A	BUTTON, 10X10 N63	
6- 6	*M00625900A	TOP PANEL ASSY, A	
6- 7	*M00630200A	COVER, MSTR MT	
6- 8	*M00630300A	COVER, LED A	
6- 9	*M00630400A	COVER, LED B	
6-10	*M00179000A	FILTER, LED	
6-11	*M00203400A	NAME PLATE, TASCAM	
6-12	*M00630100A	COVER, INPUT MT	
6-13	*M00751000A	INSUL SHEET, FFC MT	
6-21	*5780023006	SCREW, BIND M3X6 (BLK NI)	
6-22	*5780003004	SCREW, BIND M3X4	

15. PC BOARDS AND PARTS LIST

基板図とパーツリスト

AUX SND PCB

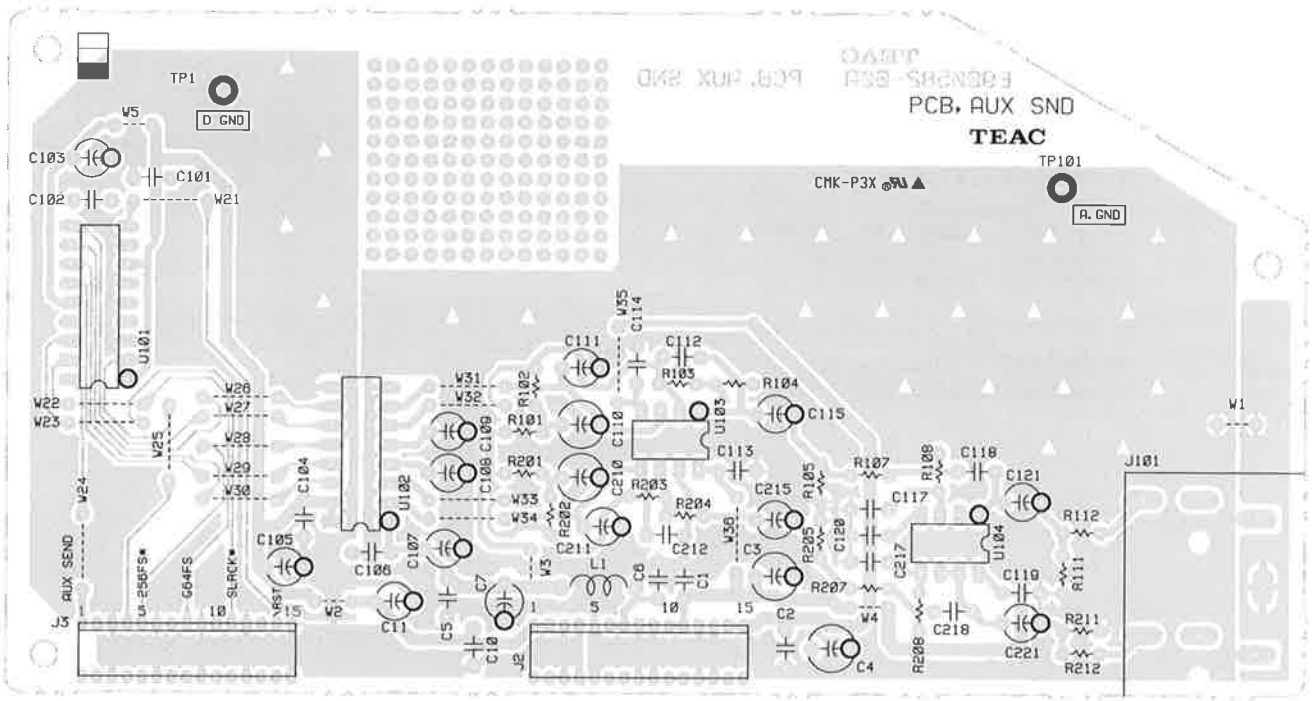

MX INS PCB

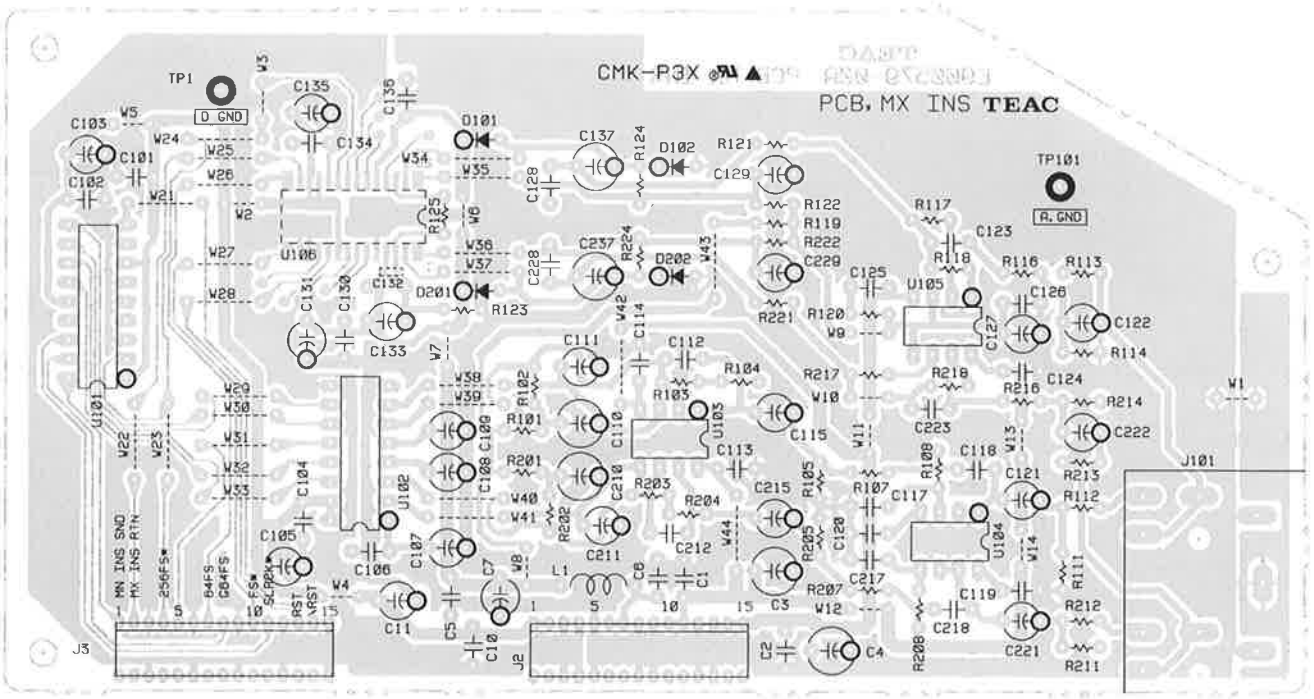

PANEL CPU PCB

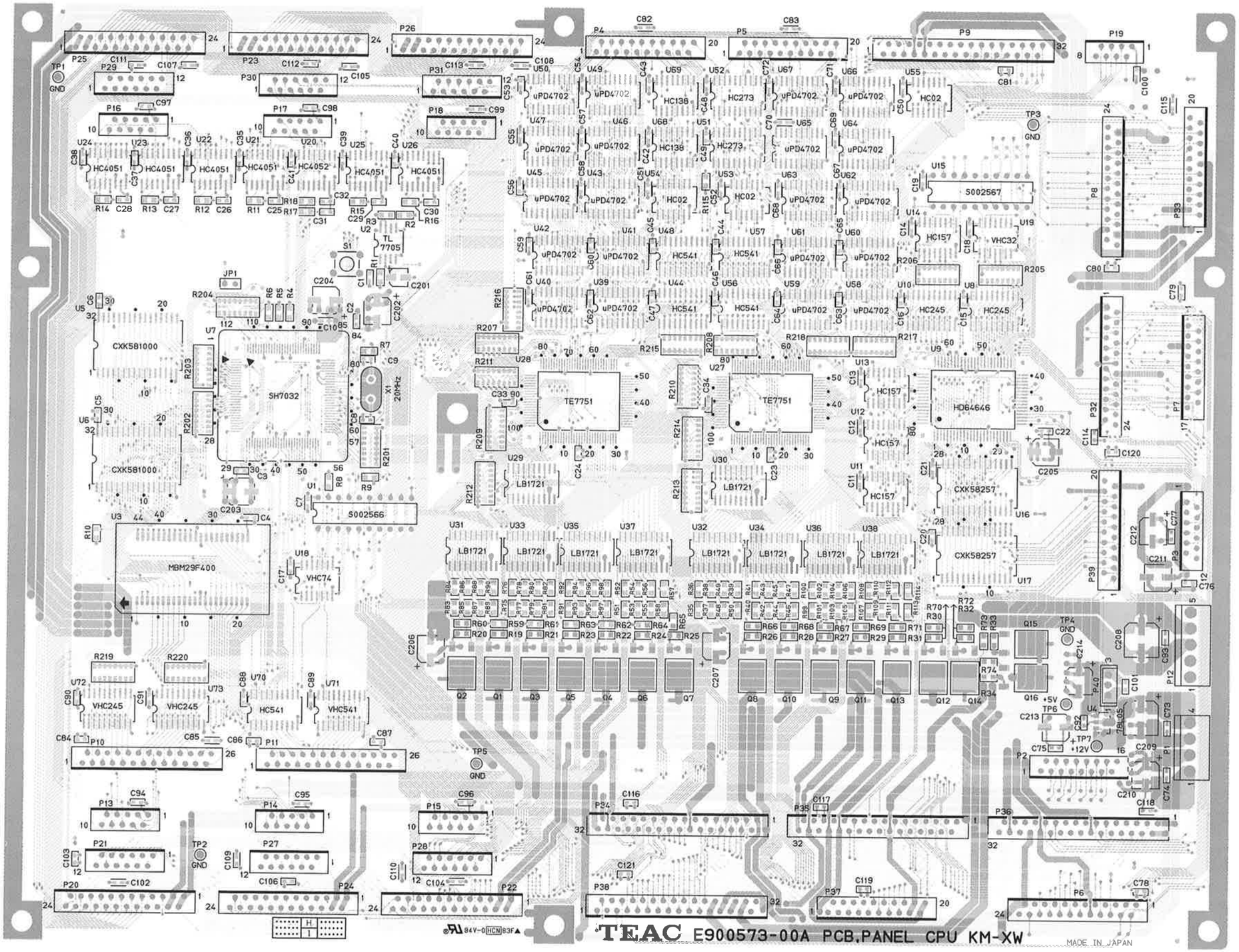

MODULE PCB SIDE A

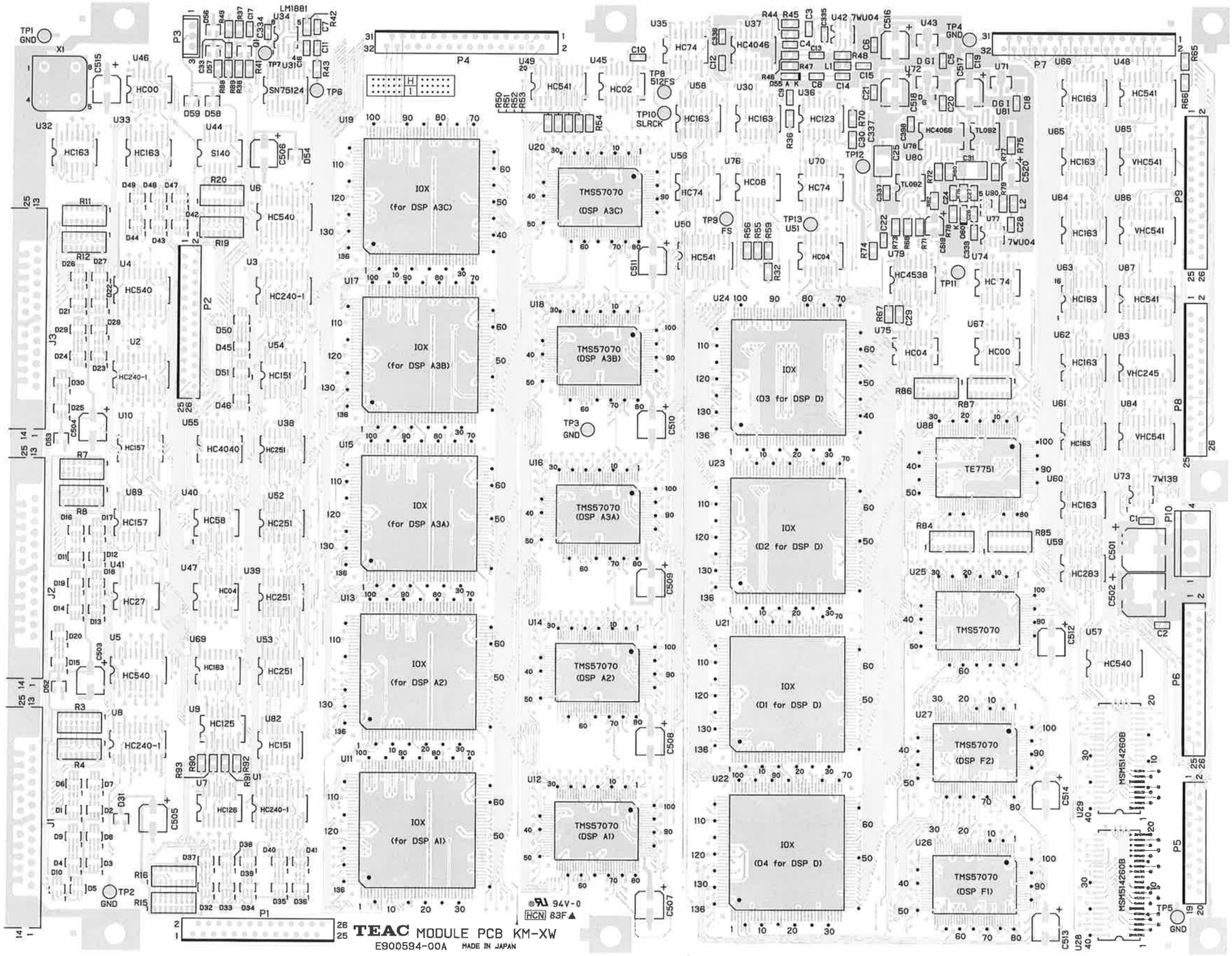

MODULE PCB SIDE B

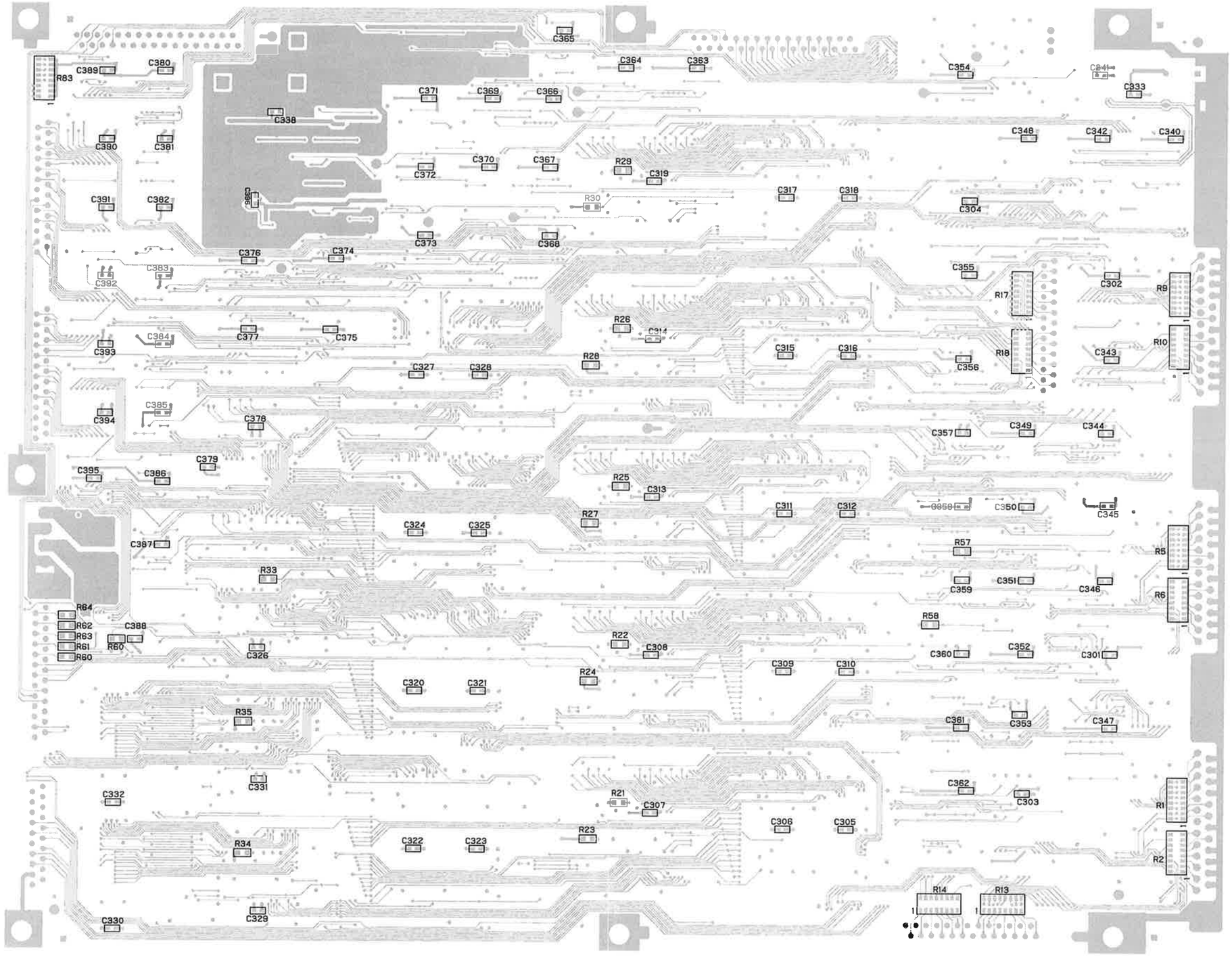

MIX PCB SIDE A

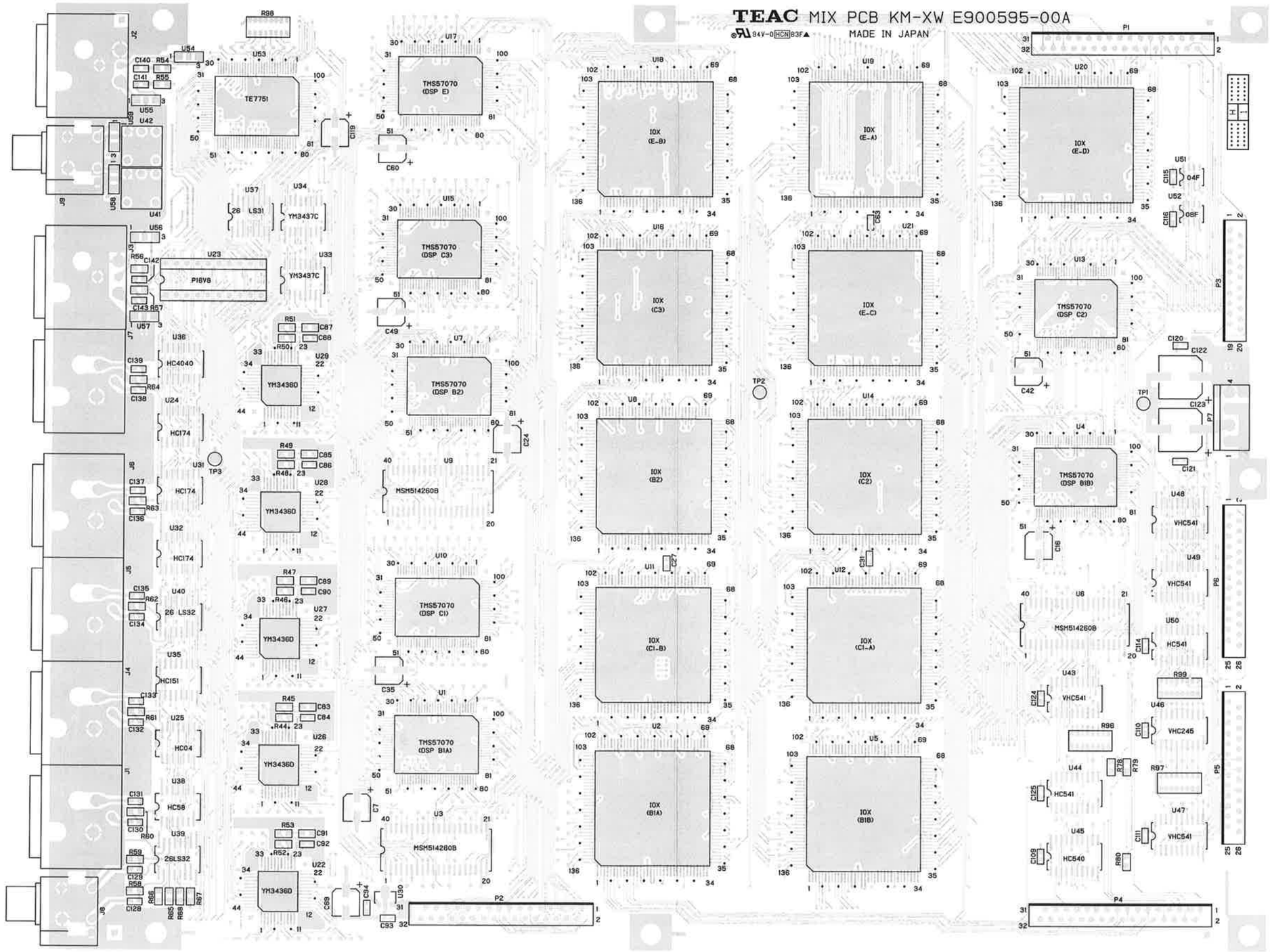

MIX PCB SIDE B

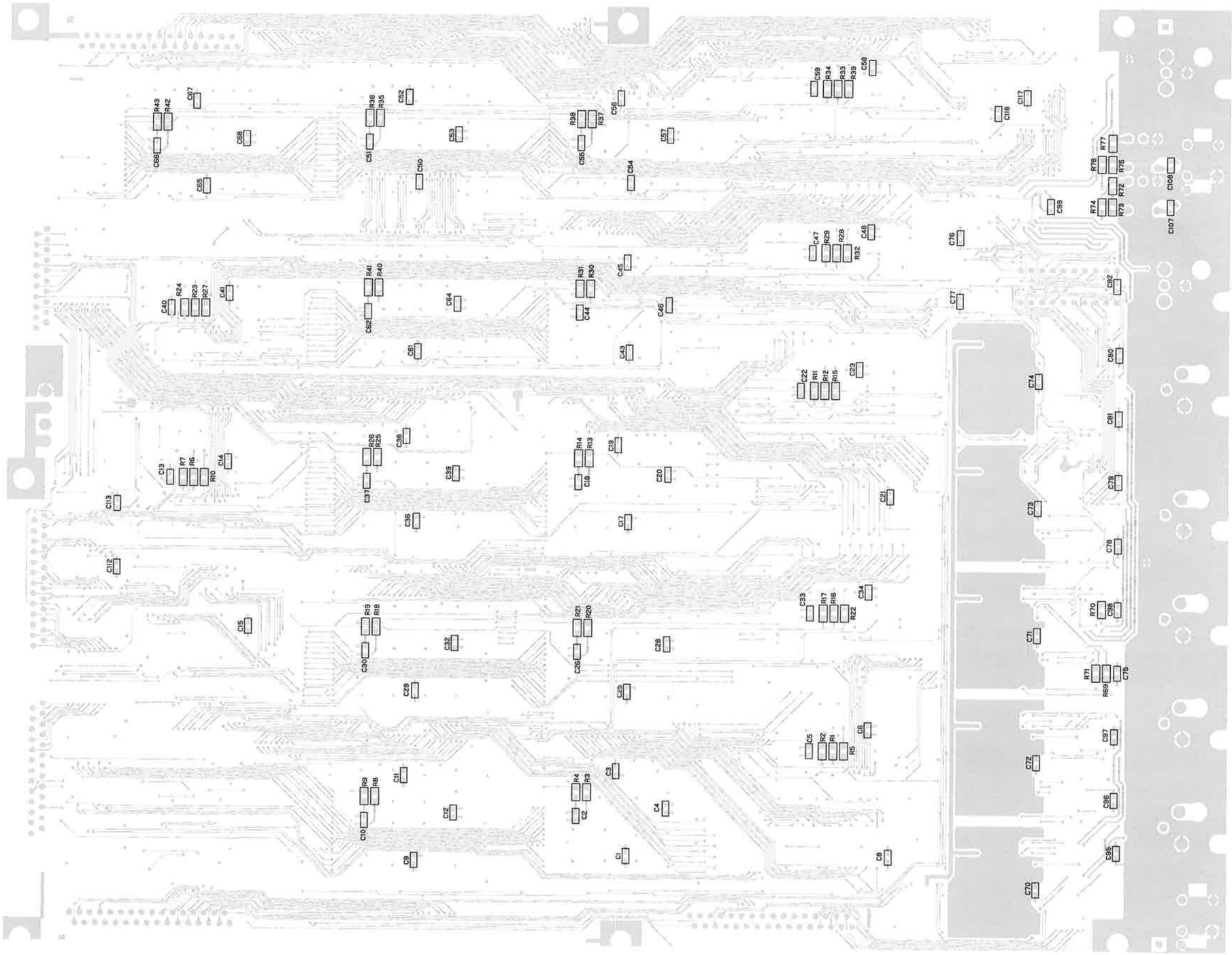

MONITOR PCB

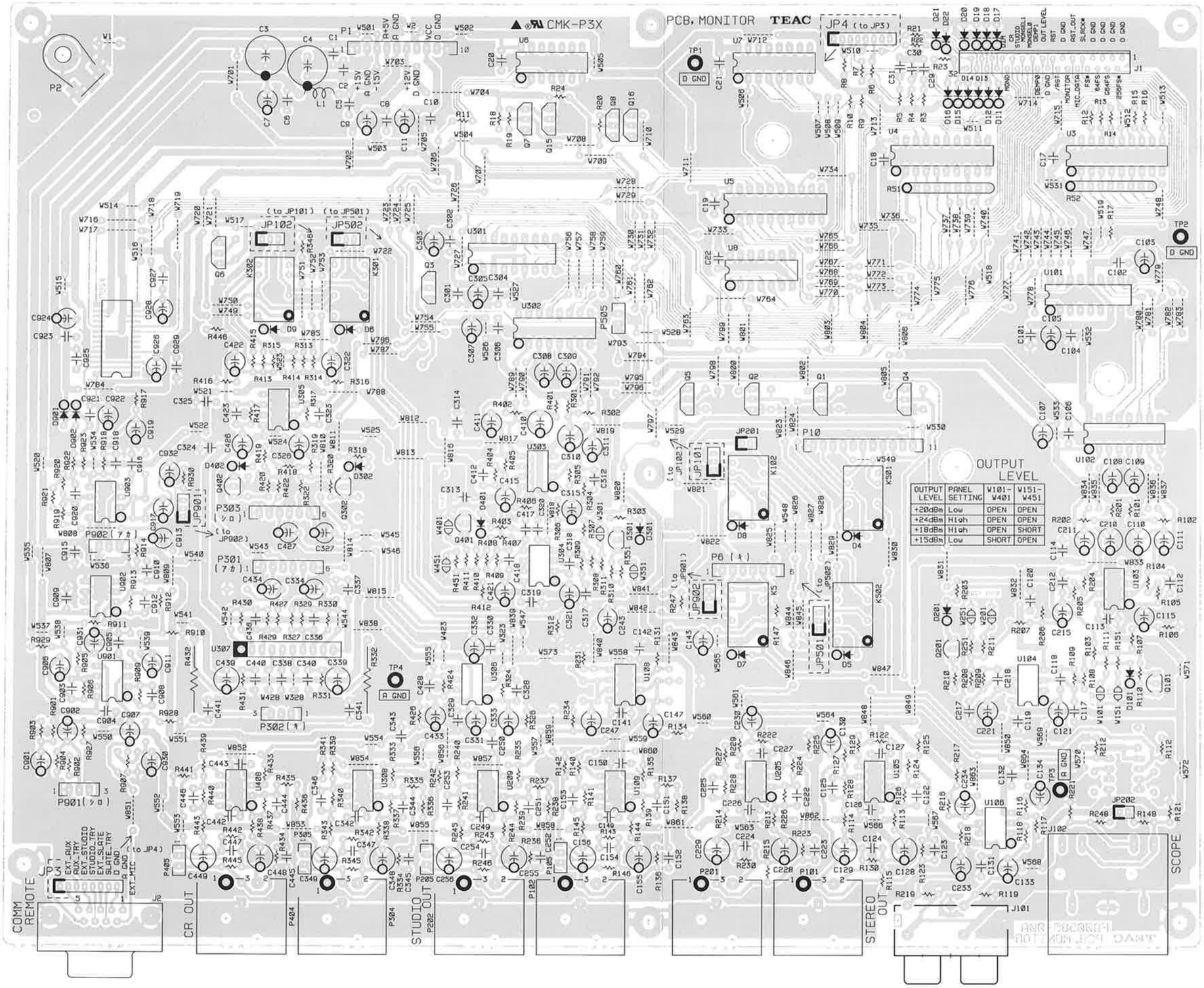

OUTPUT LEVEL	PANEL SETTING	W101-W401	W151-W451
+20dBm	Low	OPEN	OPEN
+24dBm	High	OPEN	OPEN
+18dBm	High	OPEN	SHORT
+15dBm	Low	SHORT	OPEN

AUX MOTHER PCB

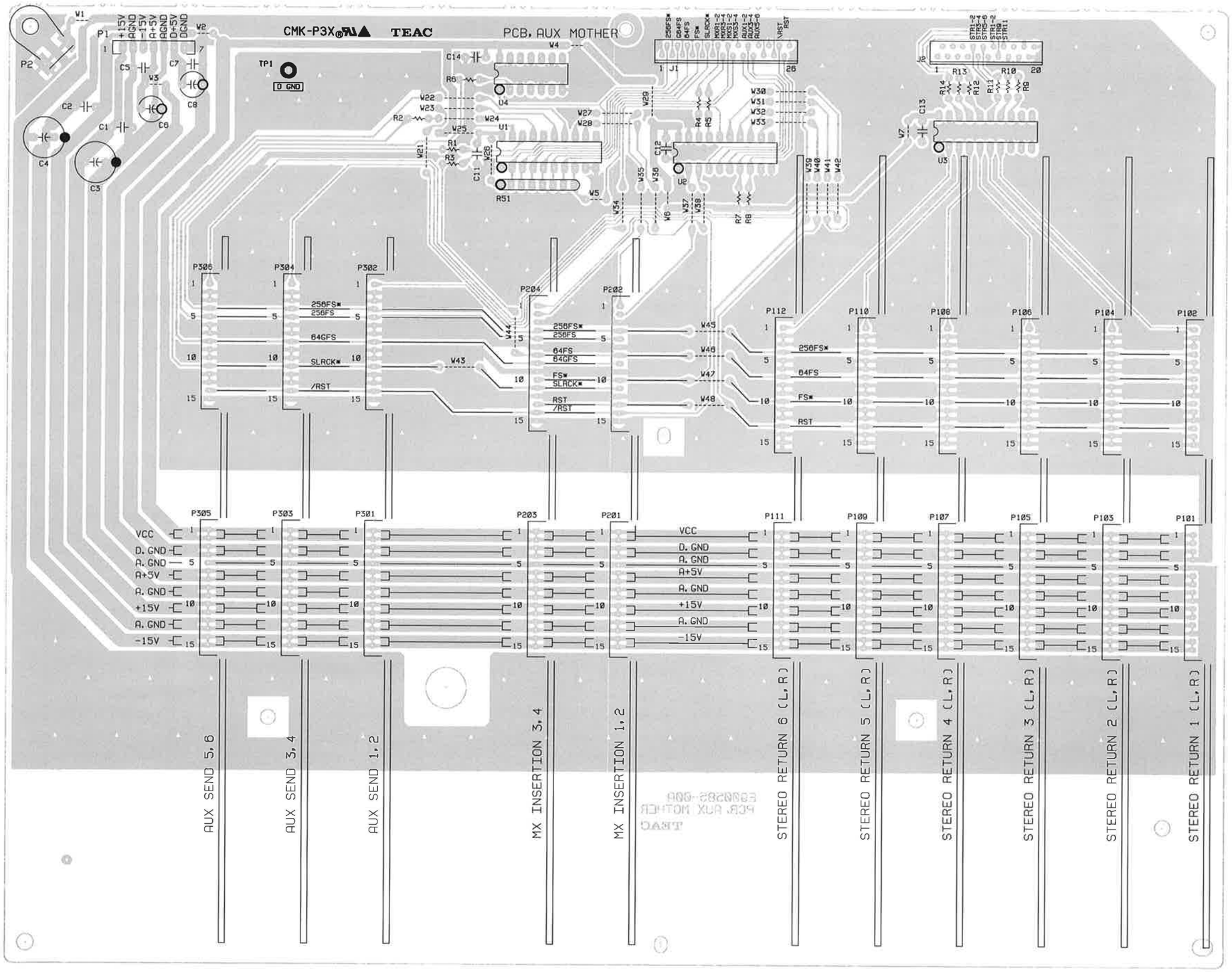

AD PCB

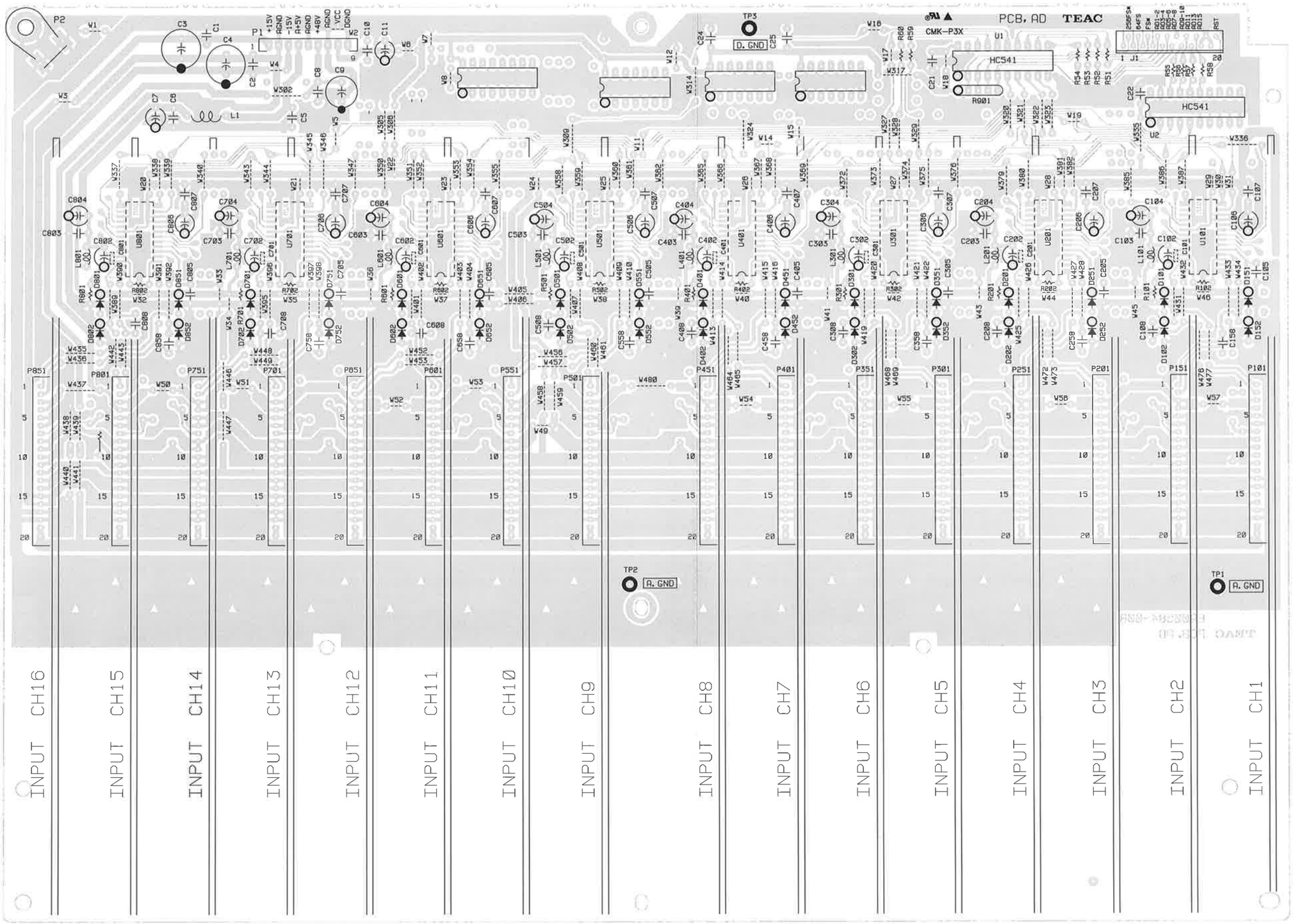
PCB, AD
TEAC
CMK-P3X
HC541
HC541
TP3
D. GND
TP2
A. GND
TP1
A. GND
INPUT CH16
INPUT CH15
INPUT CH14
INPUT CH13
INPUT CH12
INPUT CH11
INPUT CH10
INPUT CH9
INPUT CH8
INPUT CH7
INPUT CH6
INPUT CH5
INPUT CH4
INPUT CH3
INPUT CH2
INPUT CH1

MAIN CPU PCB

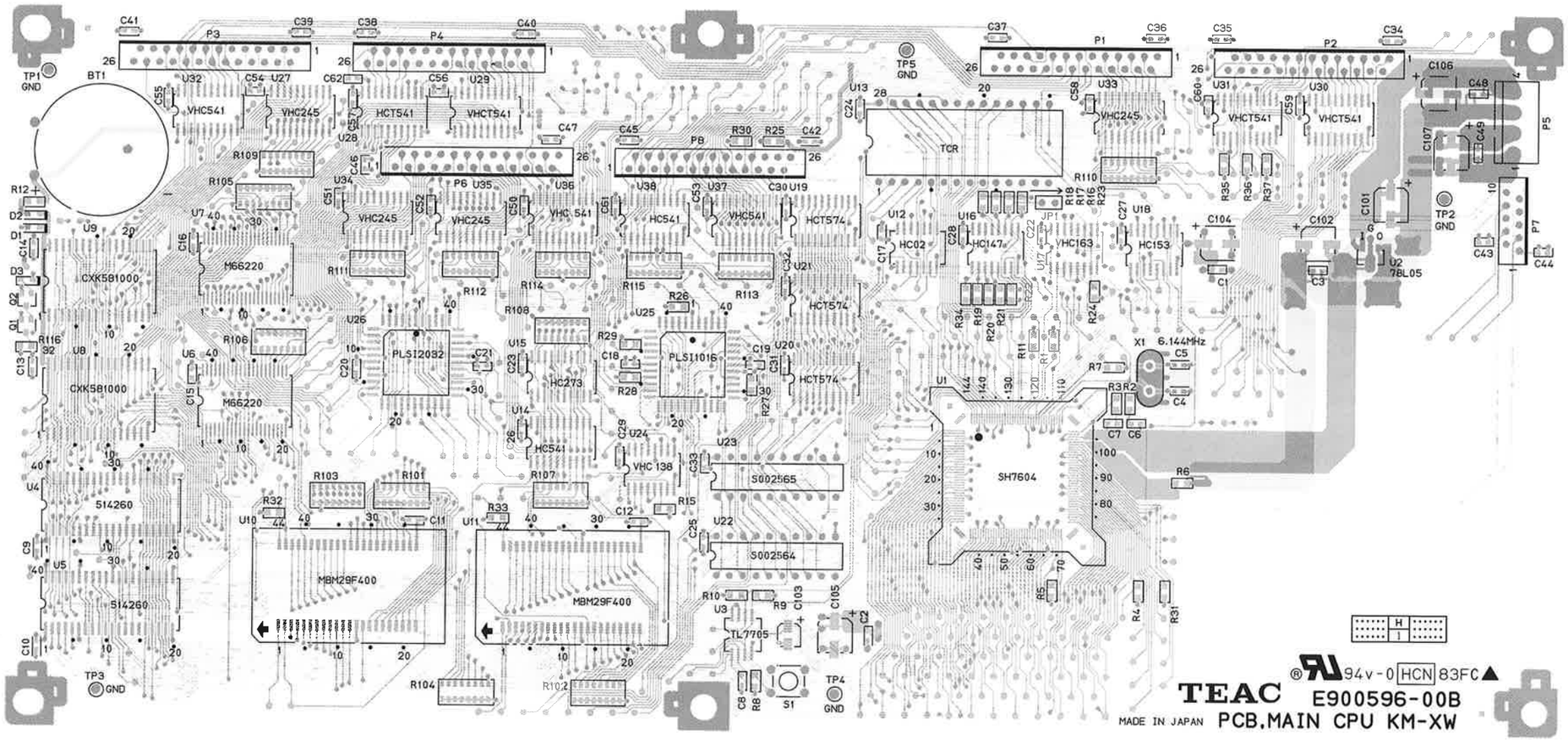

RS PCB

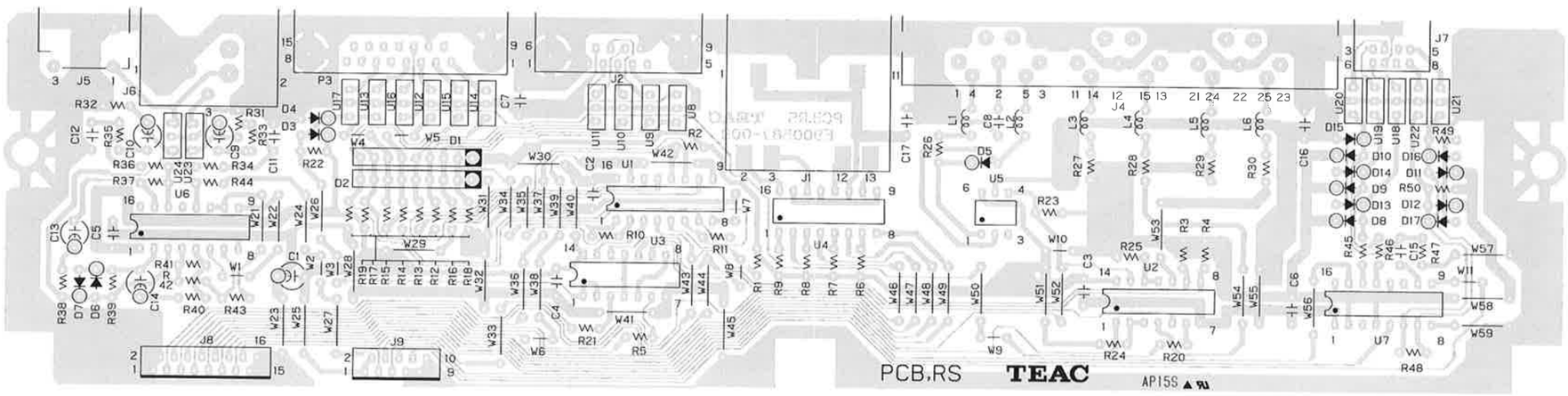

MSTR MT PCB

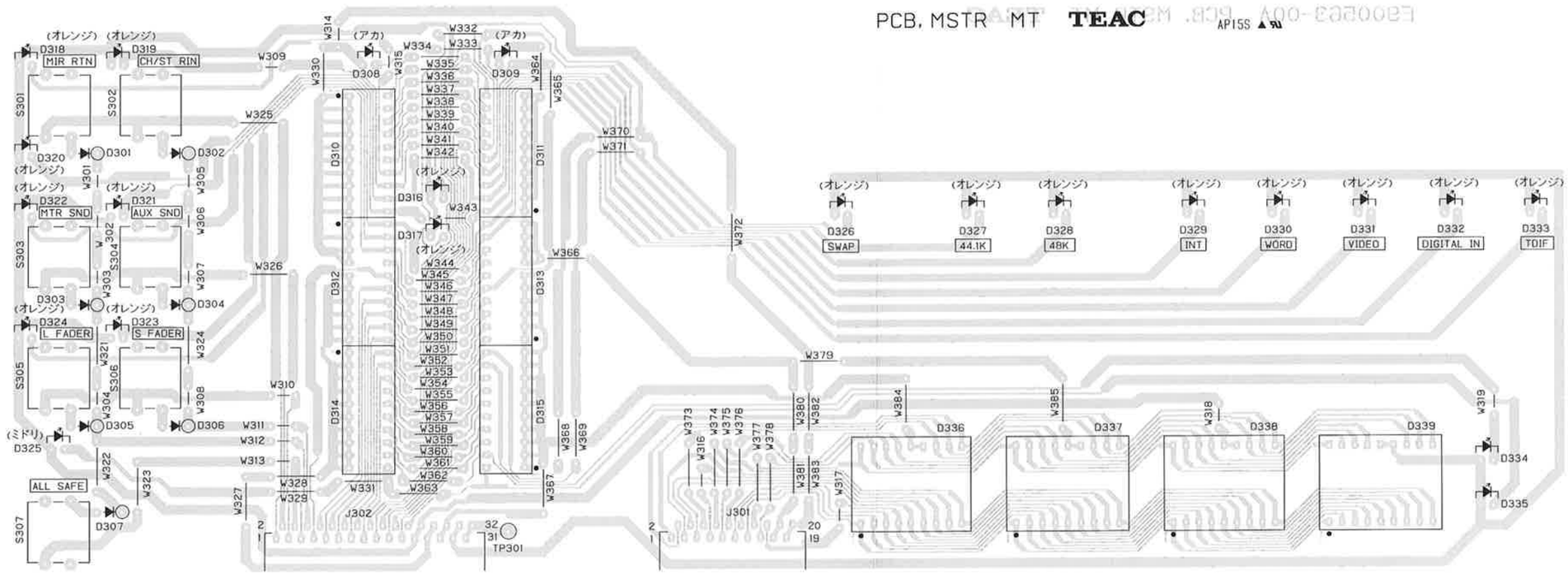

MODE PCB

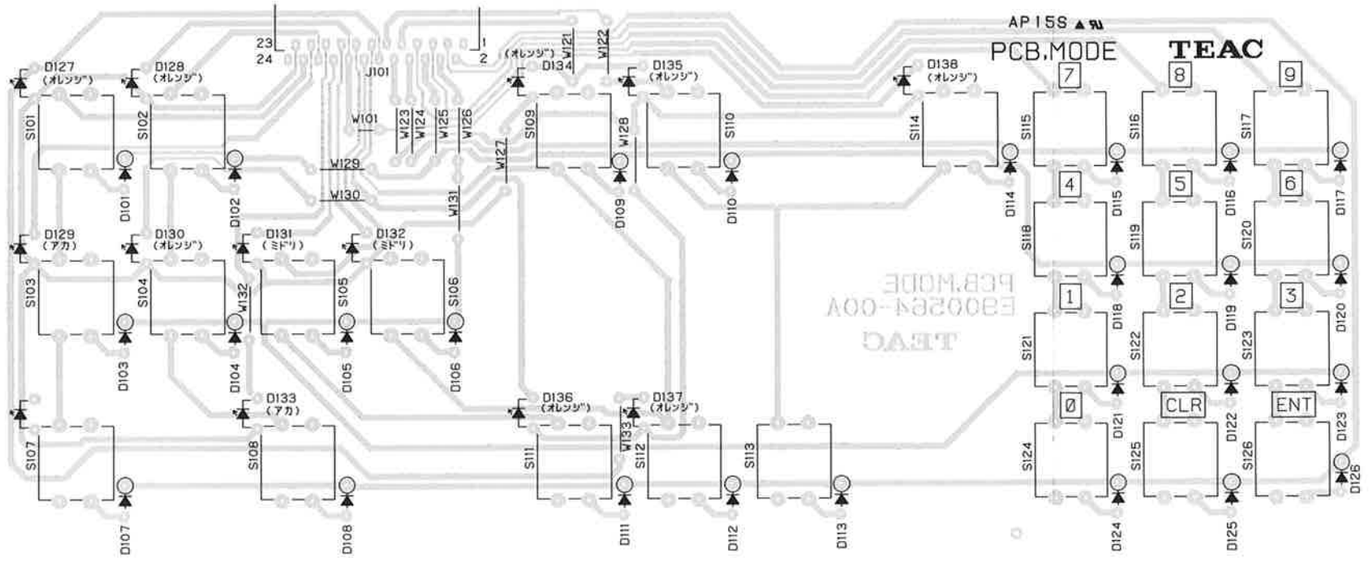

JOG PCB

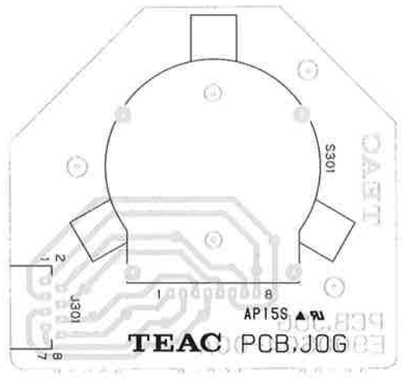

ST RTN PCB

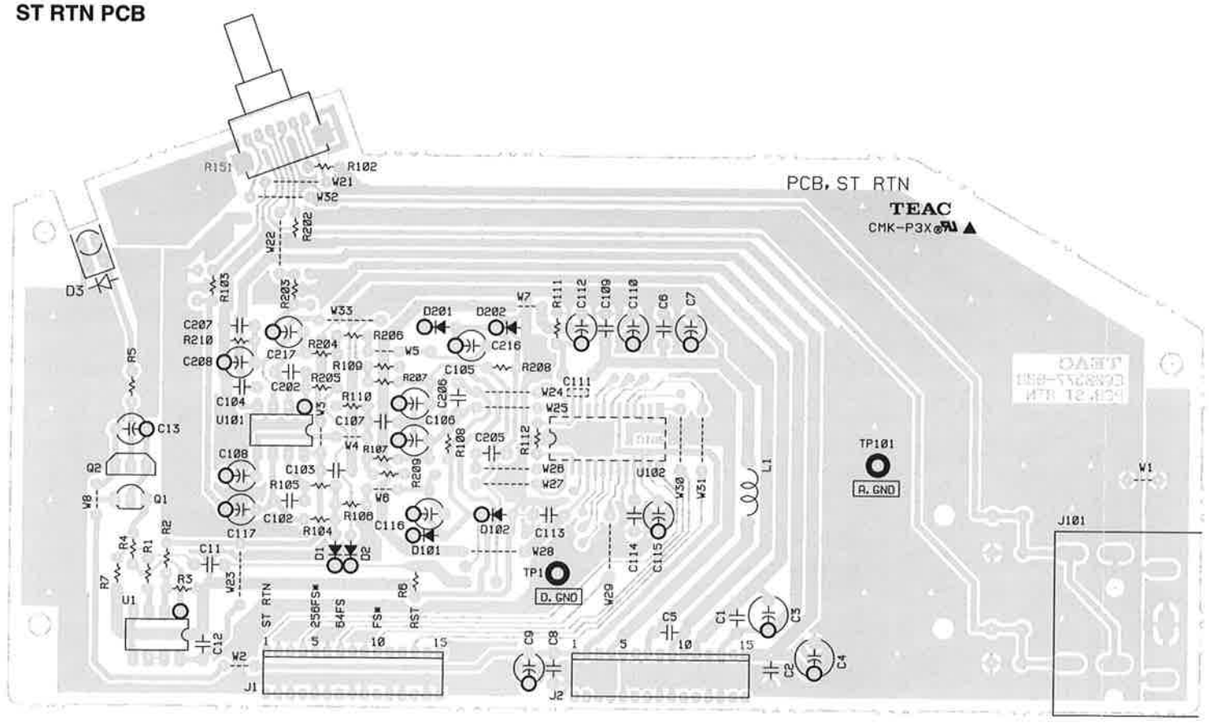

MSTR FDR PCB

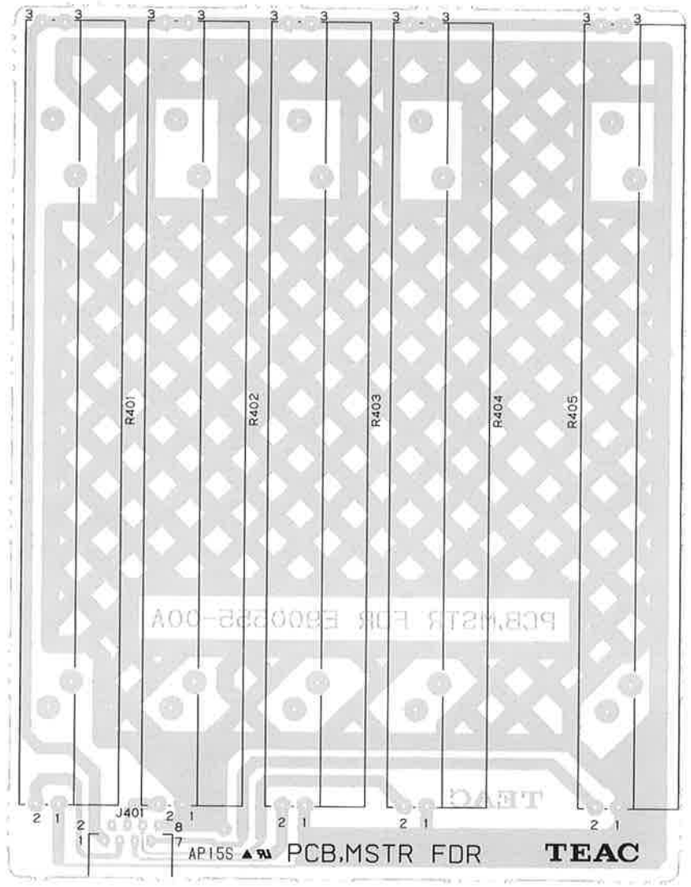

INPUT A PCB

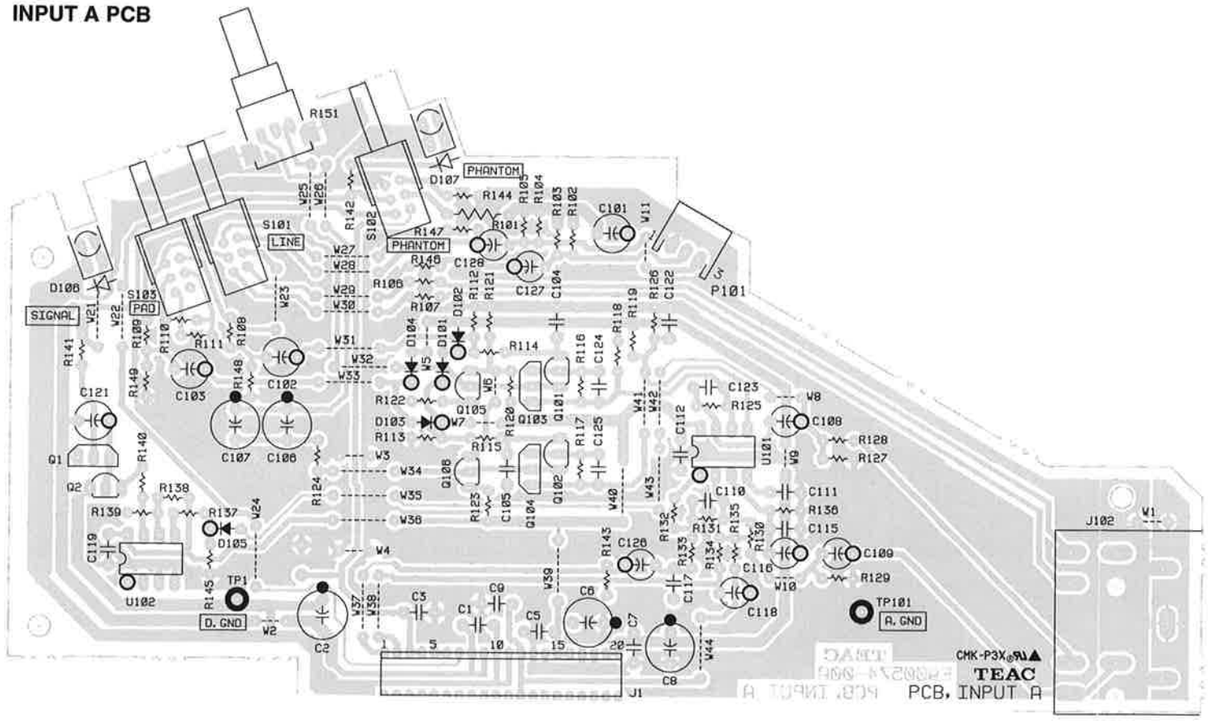

VR PCB

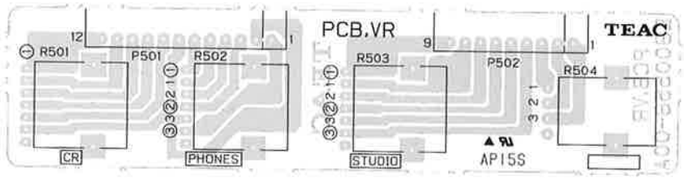

L FADER PCB

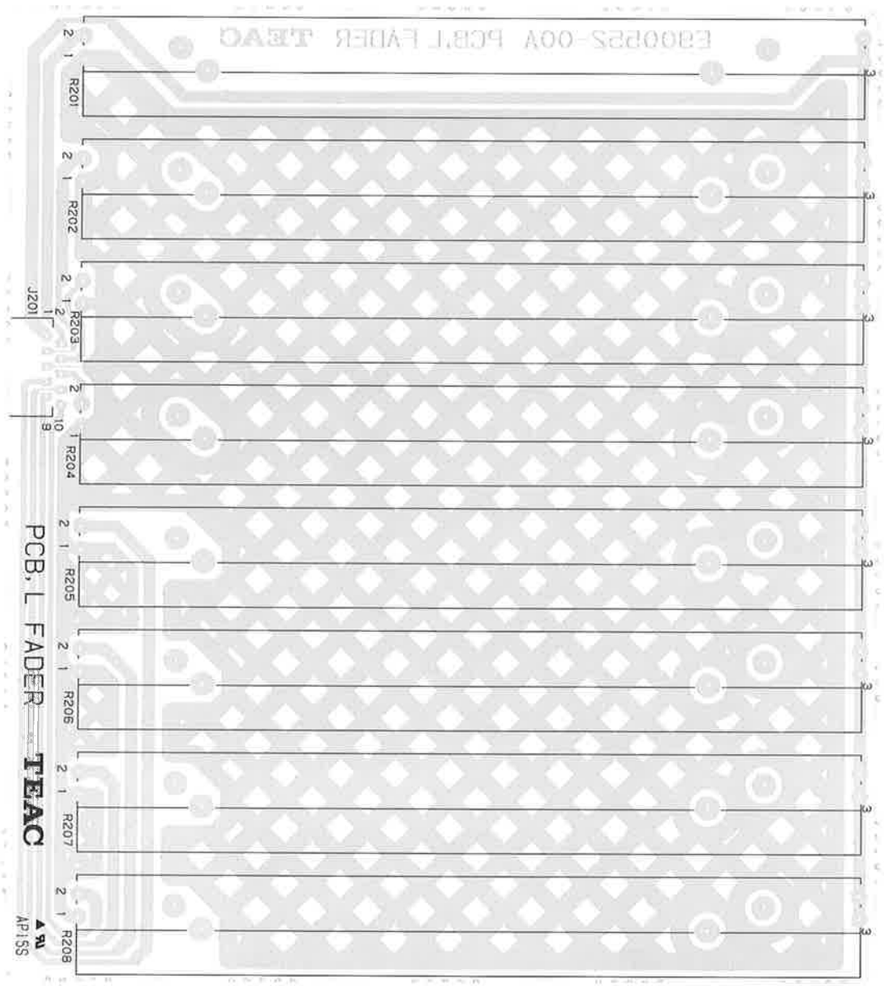

S FADER PCB

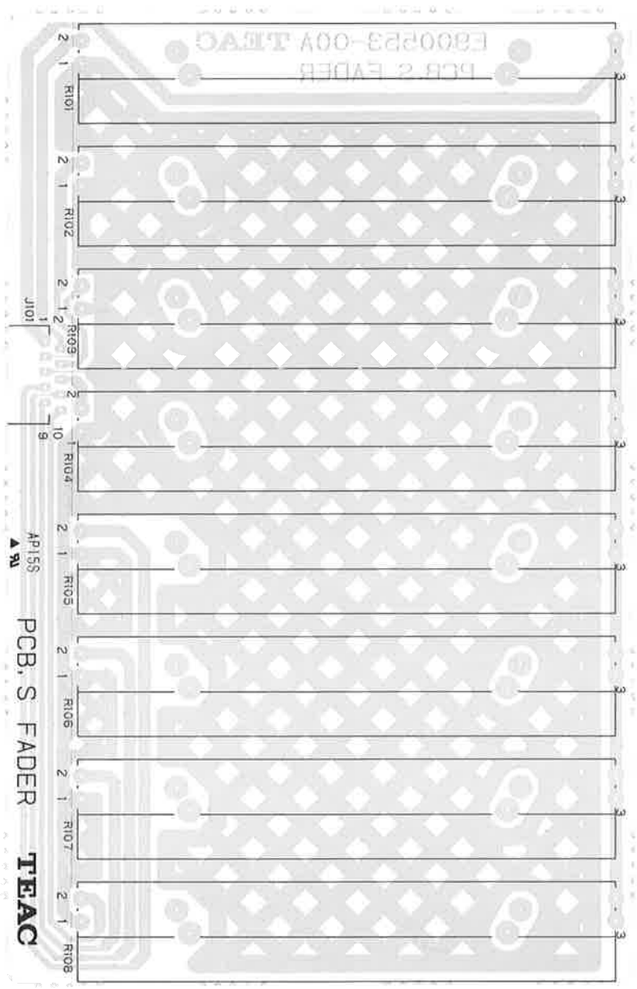

LCD VR PCB

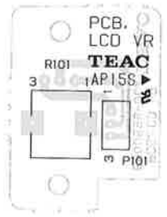

SOLO VR PCB

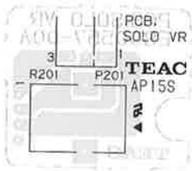

XLR PCB



DSUB PCB

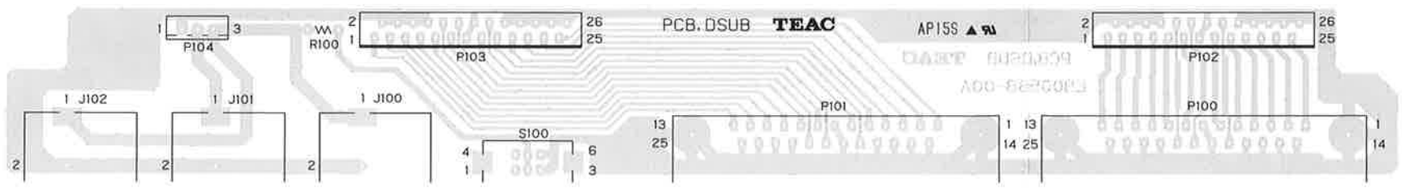

HP PCB

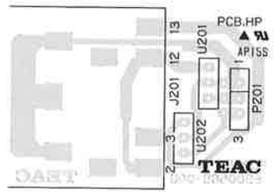

POD PCB

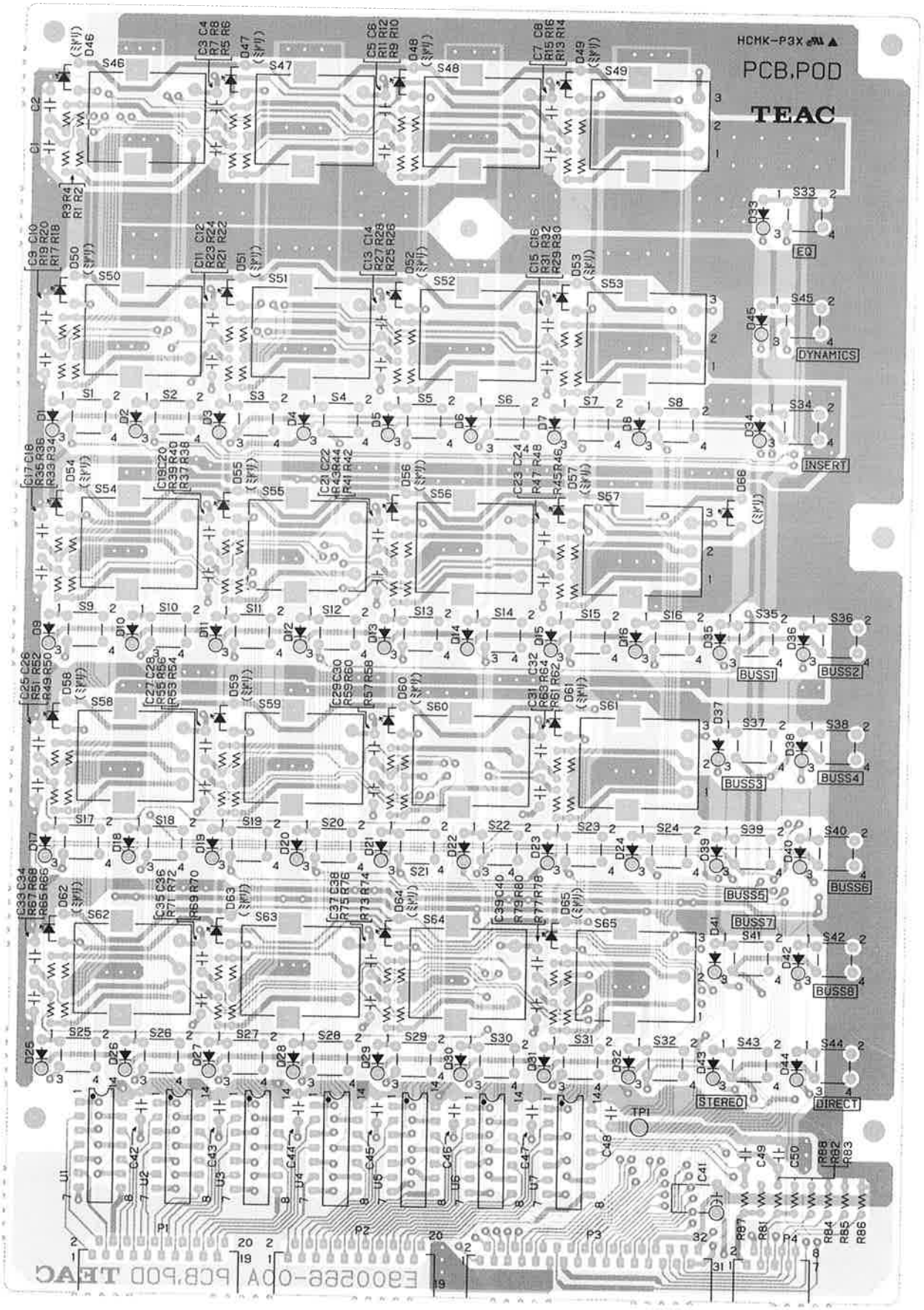
HCMK-P3X
PCB,POD
TEAC
EQ
DYNAMICS
INSERT
BUSS1
BUSS2
BUSS3
BUSS4
BUSS5
BUSS6
BUSS7
BUSS8
STEREO
DIRECT
TP1
P1
P2
P3
P4

TRANSPORT PCB

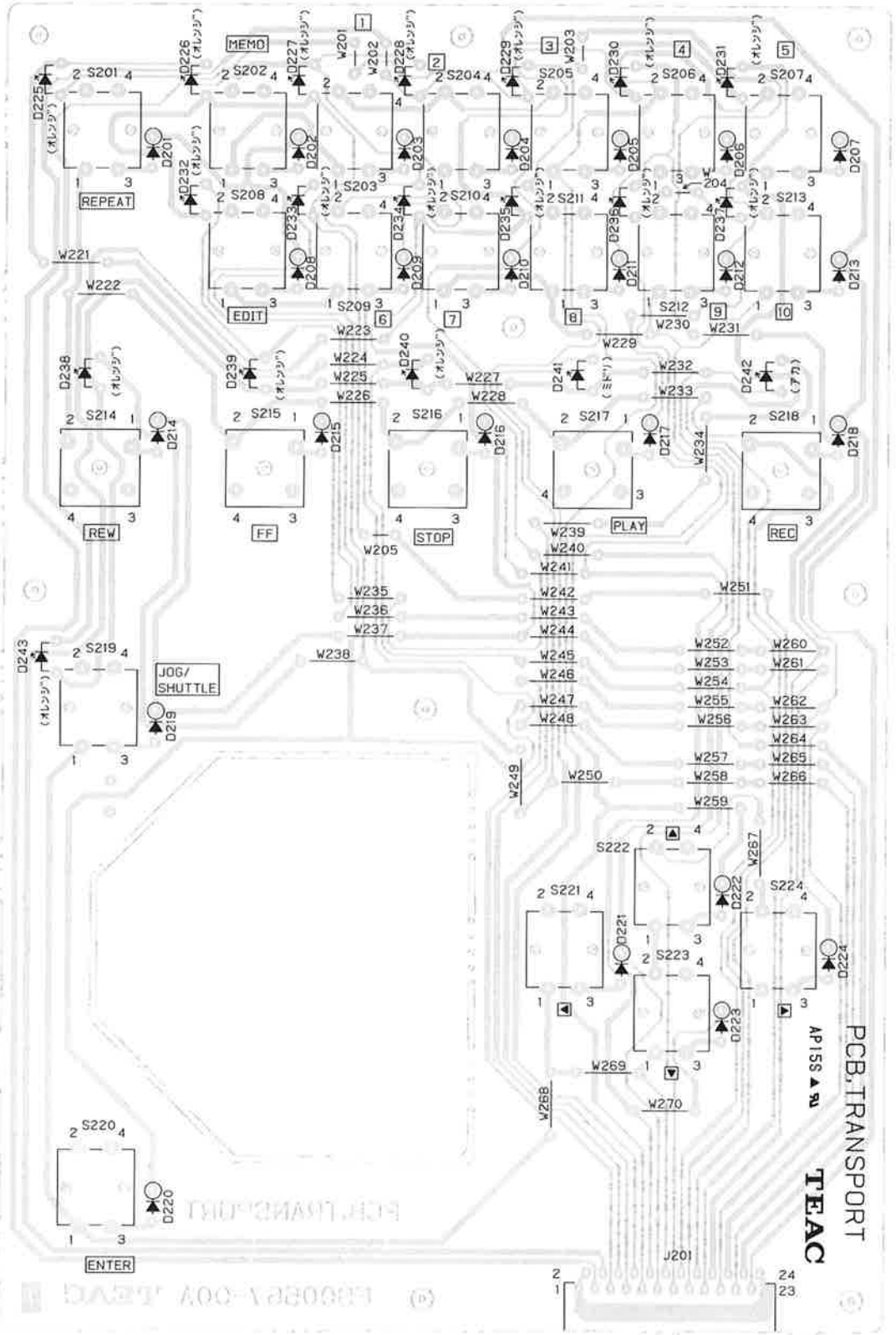

INPUT MT PCB

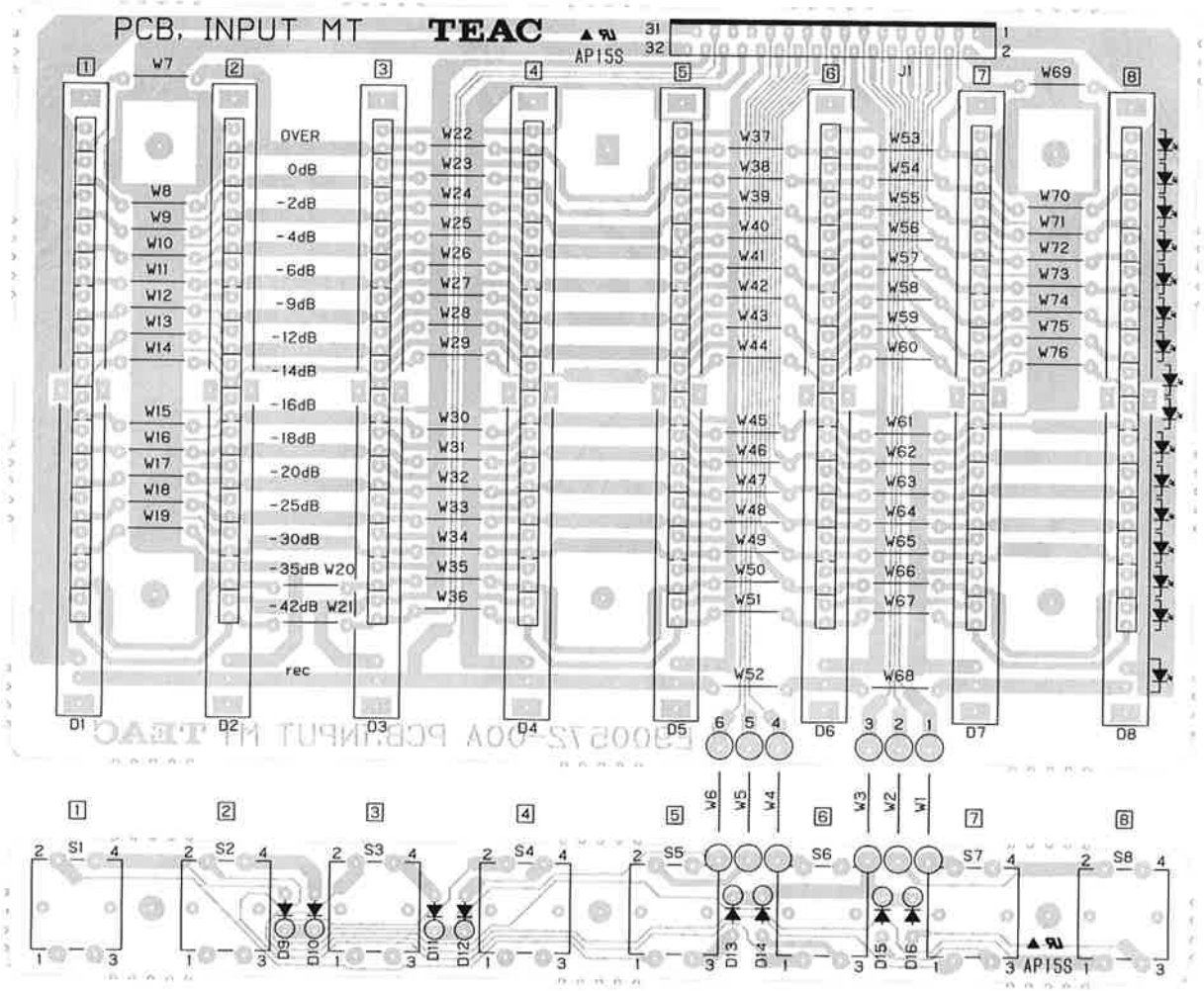

2TR IN PCB

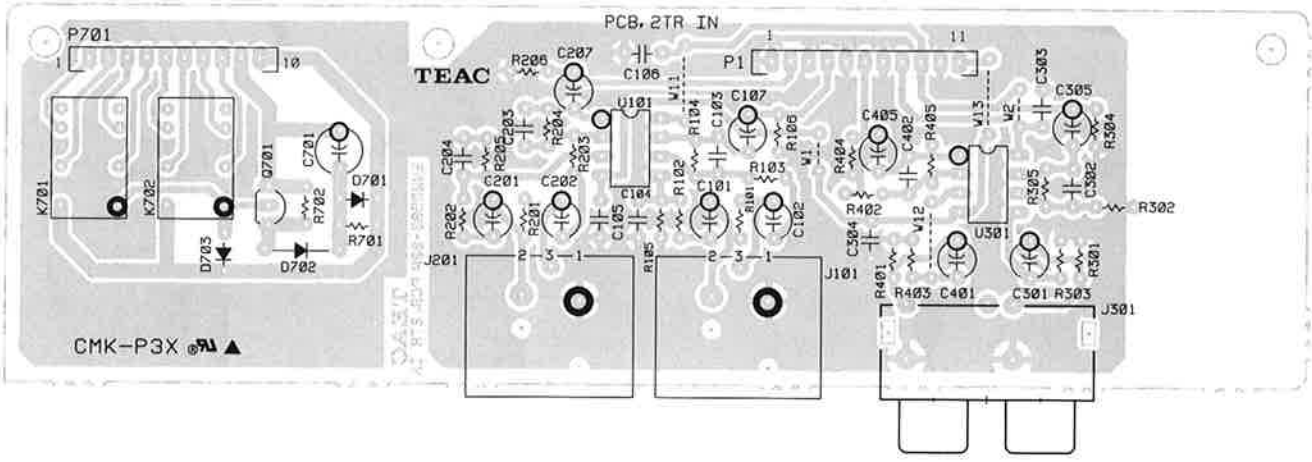

INPUT SW PCB

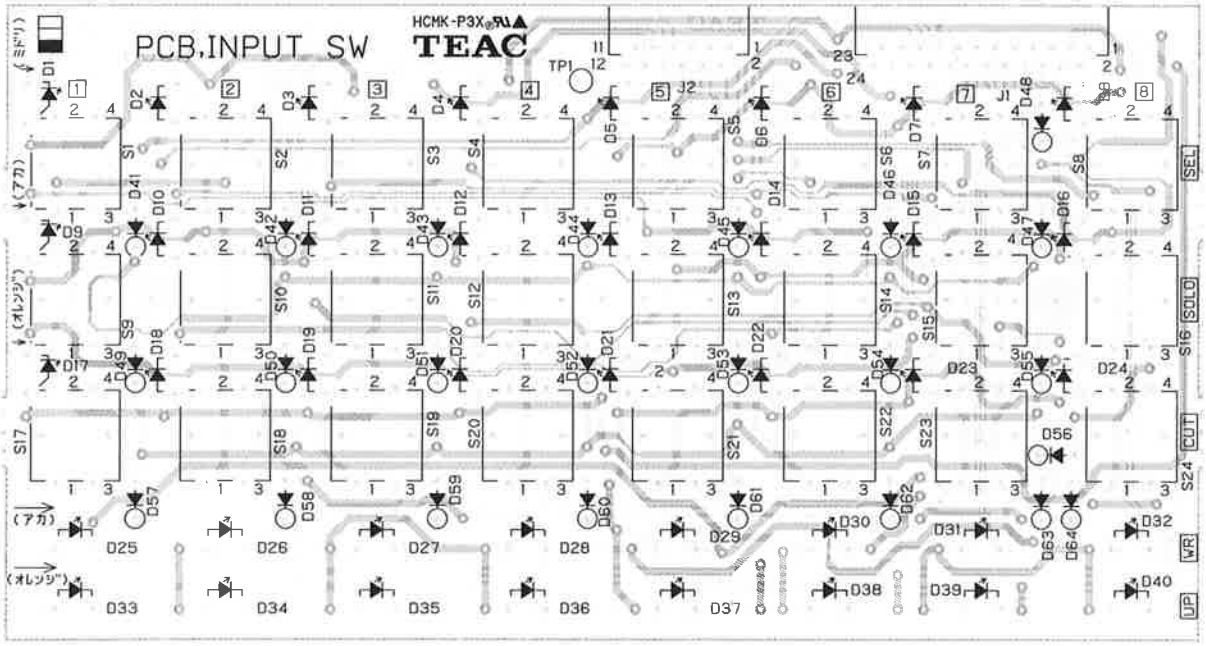

LCD PCB

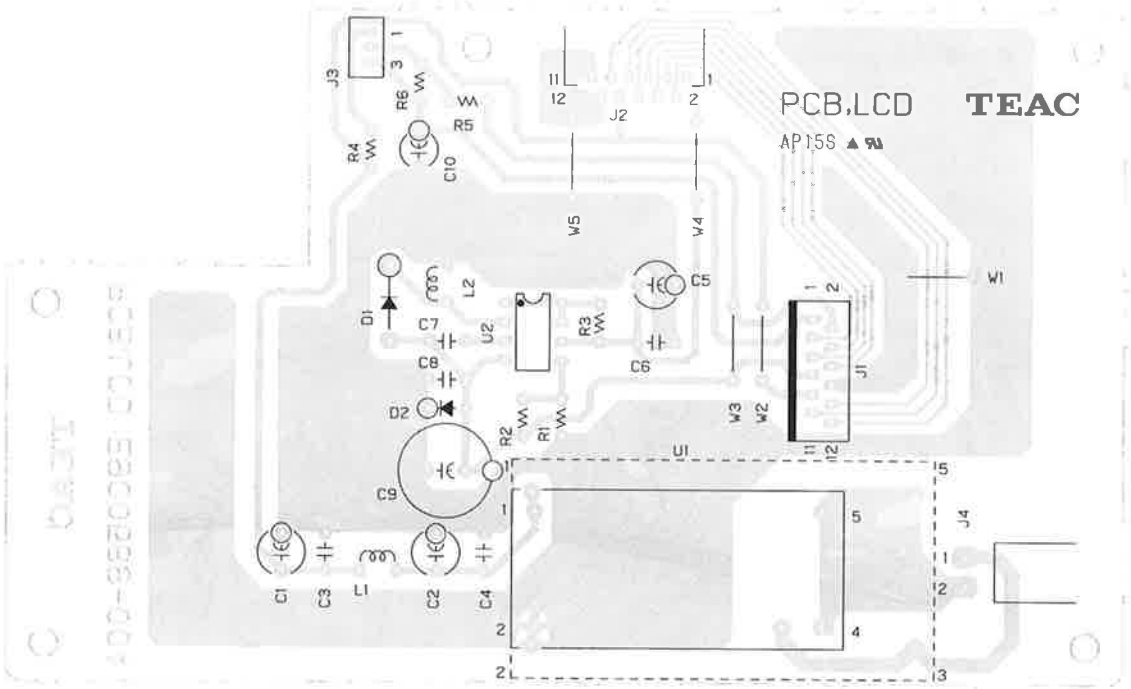

LCD ACCESS PCB

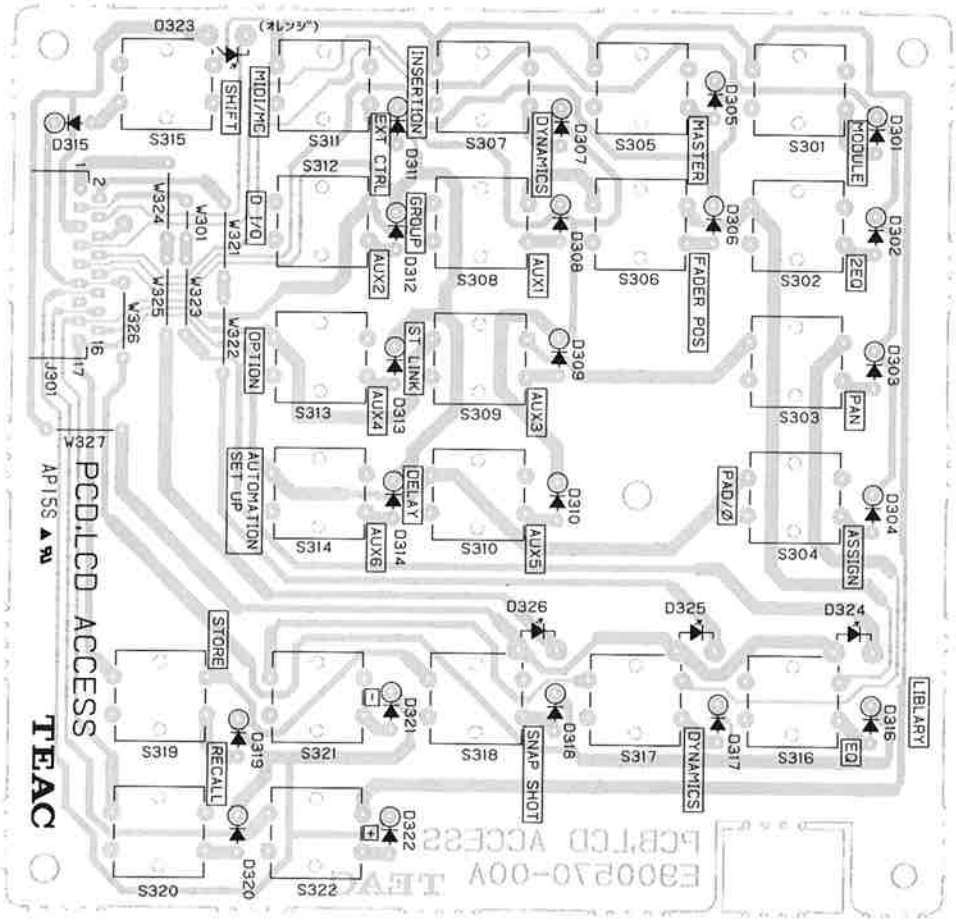

MSTR FDR SW PCB

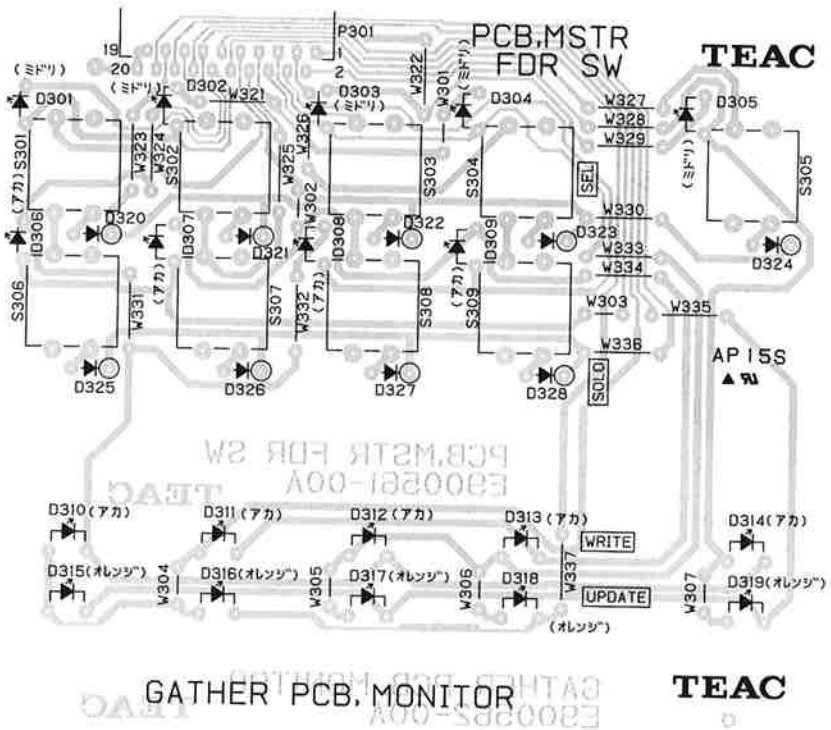

CUT GROUP PCB

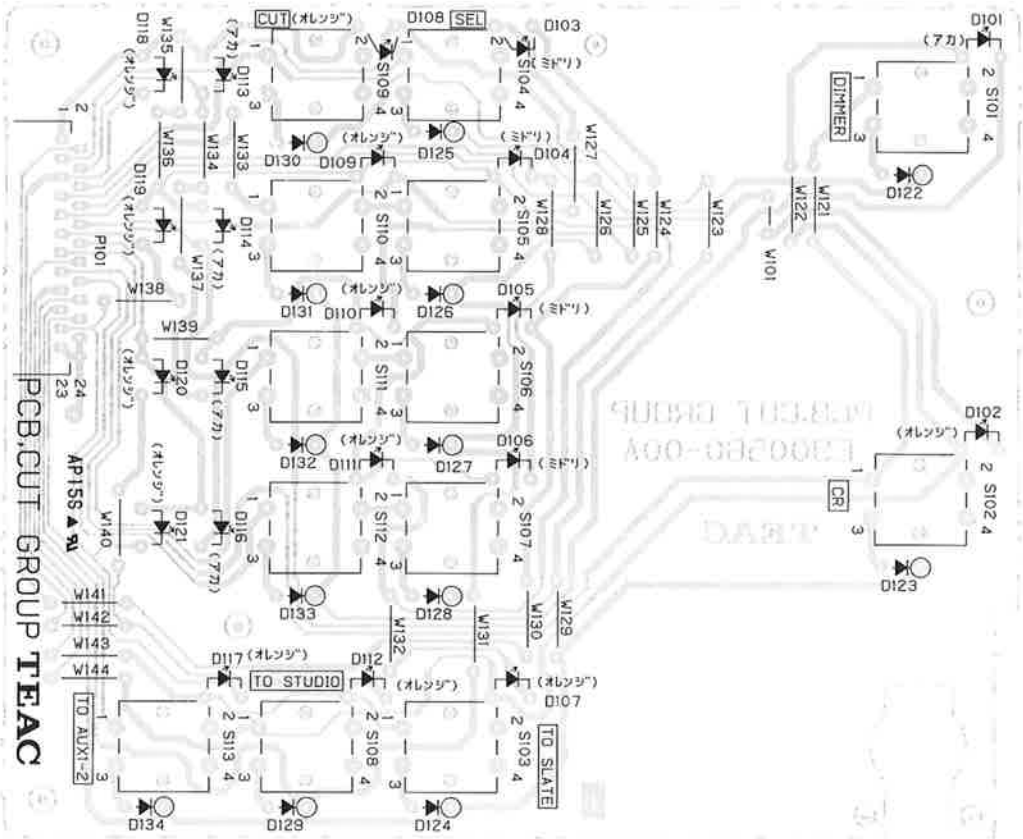

MONITOR SW PCB

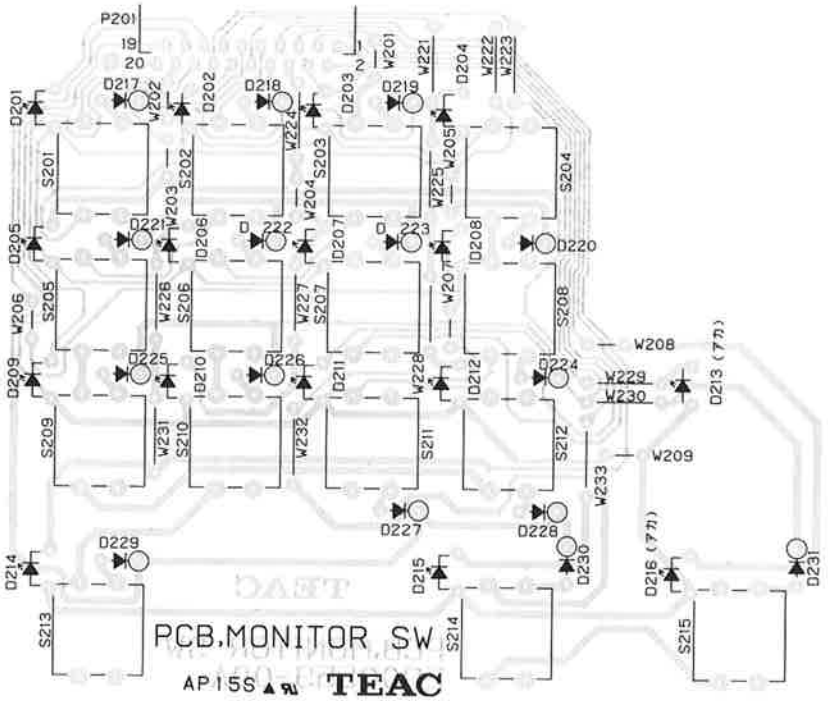

PW CNT PCB

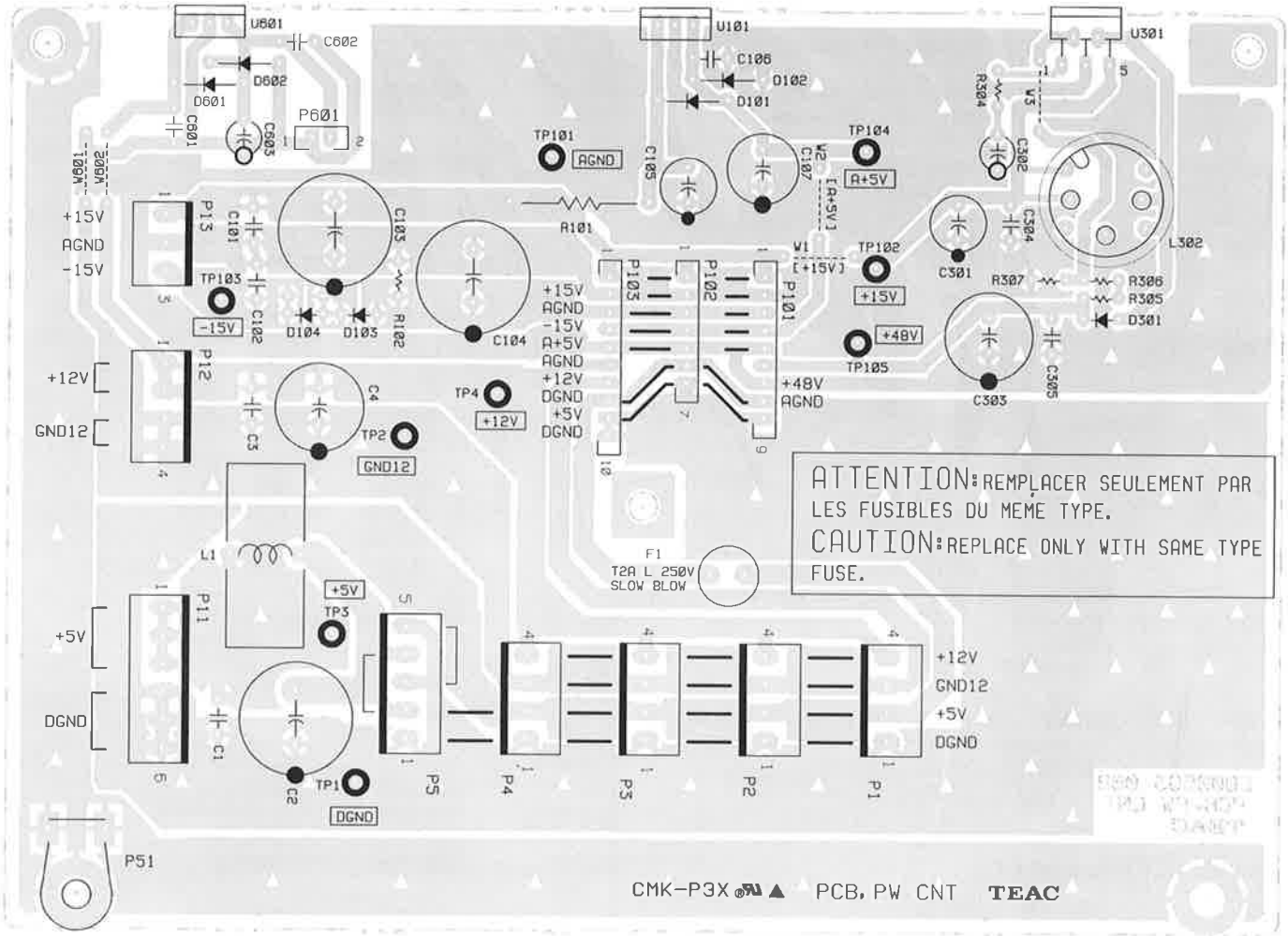

PW SW PCB

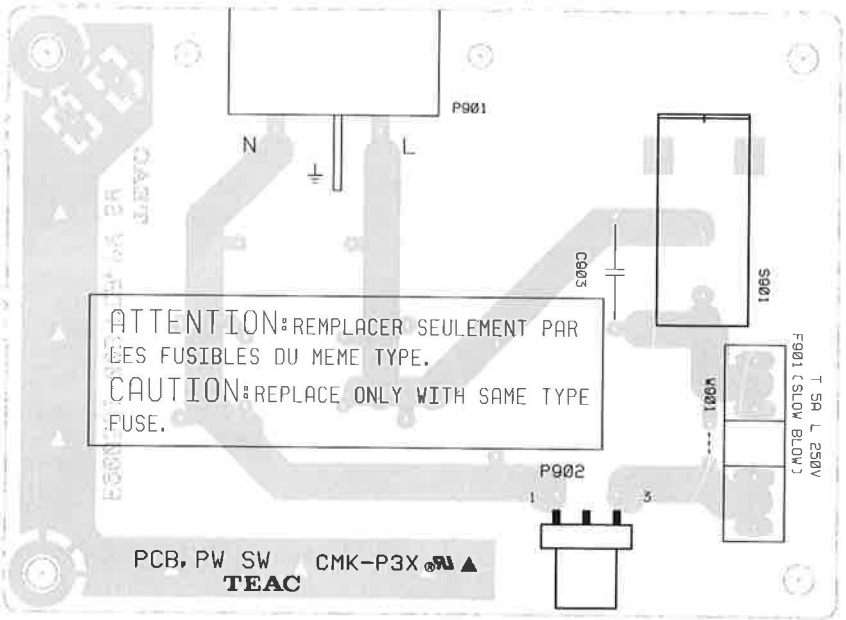

AUX SND PCB ASSY

REF. NO.	PARTS NO.	DESCRIPTION
	*E95058200A	PCB ASSY, AUX SND
	*E90058200A	PCB, AUX SND
J101	5330017800	JACK, 2B-2B
J2, 3	5336282500	SOCKET, CONN. IL-SDD-15S-S2L2
L1	5286033920	COIL, CHOKE10UH K(LAP2T)VT
U101	5220110200	IC, SM5840EP
U102	S0025480	IC, PCM69AP
U103	5220430500	IC, M5238P
U104	5220431800	IC, NE5532AN

MX INS PCB ASSY

REF. NO.	PARTS NO.	DESCRIPTION
	*E95057900A	PCB ASSY, MX INS
	*E90057900A	PCB, MX INS
D101, 201	5224015020	DIODE, 1SS133T-77 FT
D102, 202	5224015020	DIODE, 1SS133T-77 FT
J101	5330018200	JACK, 3Z-3Z
J2, 3	5336282500	SOCKET, CONN. IL-SDD-15S-S2L2
L1	5286033920	COIL, CHOKE 10UH K(LAP2T)VT
U101	5220110200	IC, SM5840EP
U102	S0025480	IC, PCM69AP
U103	5220430500	IC, M5238P
U104	5220431800	IC, NE5532AN
U105	5220431800	IC, NE5532AN
U106	S0000223	IC, AK-5340-VS-E1

PANEL CPU PCB ASSY

REF. NO.	PARTS NO.	DESCRIPTION
	*E95057300A	PCB ASSY, PANEL CPU
	*E90057300A	PCB, PANEL CPU
JP1	13125026	PLUG, CONN. CSP01-02-CC
P1	5336374400	PLUG, CONN. B4P-VH
P2	E0023410	CONNECTOR, 16FE-BT-VK-N
P3	E0023370	CONNECTOR, 12FE-BT-VK-N
P4, 5	E0023450	CONNECTOR, 20FE-BT-VK-N
P6	E0023490	CONNECTOR, 24FE-BT-VK-N
P7	E0023420	CONNECTOR, 17FE-BT-VK-N
P8	E0023490	CONNECTOR, 24FE-BT-VK-N
P9	E0023540	CONNECTOR, 32FE-BT-VK-N
P10, 11	E0023510	CONNECTOR, 26FE-BT-VK-N
P12	5336374500	PLUG, CONN. B5P-VH
P13-18	E0023350	CONNECTOR, 10FE-BT-VK-N
P19	E0023330	CONNECTOR, 08FE-BT-VK-N
P20	E0023490	CONNECTOR, 24FE-BT-VK-N
P21	E0023370	CONNECTOR, 12FE-BT-VK-N
P22-26	E0023490	CONNECTOR, 24FE-BT-VK-N
P27-31	E0023370	CONNECTOR, 12FE-BT-VK-N
P32	E0023490	CONNECTOR, 24FE-BT-VK-N
P33	E0023450	CONNECTOR, 20FE-BT-VK-N
P34-36	E0023540	CONNECTOR, 32FE-BT-VK-N
P37	E0023450	CONNECTOR, 20FE-BT-VK-N
P38	E0023540	CONNECTOR, 32FE-BT-VK-N
P39	E0023450	CONNECTOR, 20FE-BT-VK-N

PANEL CPU PCB ASSY

REF. NO.	PARTS NO.	DESCRIPTION
P40	5336303300	PLUG, CONN. B3B-EH(WHT)
Q1-16	S0025724	TR, 2SA1834TL R
R201-204	R0074634	RES ARRAY, 1/16W 8X10K J
R205, 206	R0074634	RES ARRAY, 1/16W 8X10K J
R207-214	R0074634	RES ARRAY, 1/16W 8X10K J
R215-218	R0074634	RES ARRAY, 1/16W 8X10K J
R219, 220	R0074634	RES ARRAY, 1/16W 8X10K J
S1	5302109800	SW, TACT SKHHDA
U1	S00256600A	IC, PLD PNCPUWT
U2	S0026034	IC, TL7705CPS-B
U3	S00264900C	ROM ASSY, PANEL MBM29F400BC
U3	E0033093	SOCKET, 44PIN SOP IC179
U4	13447922	IC, NJM78L05UA-TE1
U5, 6	S0028164	IC, SRAM M5M51008BFP
U7	S0004063	IC, SH7032-20
U8, 10	5220103900	IC, TC74HC245AF-TP2
U9	S0004183	IC, HD64646FS
U11-14	5220063000	IC, TC74HC157AF
U15	S00256700A	IC, PLD PNCPUCS
U16, 17	S0024234	IC, SRAM CXK58257CM-70LL
U18	S0020354	IC, TC74VHC74
U19	S0026424	IC, TC74VHC32FEL
U20	S0025534	IC, HD74HC4052FPEL
U21-26	13444743	IC, 74HC4051F
U27, 28	S0025503	IC, IO EXPANDER
U29-38	S0025734	IC, LB1721M
U39-43	S0025714	IC, UPD4702G
U44, 48	S0000584	IC, HD74HC541FPEL
U45-47	S0025714	IC, UPD4702G
U49, 50	S0025714	IC, UPD4702G
U51, 52	13445672	IC, HD74HC273F
U53-55	5220124700	IC, HD74HC02FP
U56, 57	S0000584	IC, HD74HC541FPEL
U58-67	S0025714	IC, UPD4702G
U68, 69	5220116400	IC, HD74HC138FP
U70	S0000584	IC, HD74HC541FPEL
U71	S0020344	IC, TC74VHC541
U72, 73	S0025604	IC, TC74VHC245FEL
X1	E0036110	RESONATOR, 20.000MHZ

MODULE PCB ASSY

REF. NO.	PARTS NO.	DESCRIPTION
	*E95059400A	PCB ASSY, MODULE
	*E90059400A	PCB, MODULE
D1-10	13411596	DIODE, IMN10
D11-20	13411596	DIODE, IMN10
D21-30	13411596	DIODE, IMN10
D31	13411618	DIODE, DA119
D32-41	13411596	DIODE, IMN10
D42-51	13411596	DIODE, IMN10
D52-54	13411618	DIODE, DA119
D55	5228018100	C, VARI HVU17TR
D58, 59	13411618	DIODE, DA119
D60	5228018100	C, VARI HVU17TR

MODULE PCB ASSY

REF. NO.	PARTS NO.	DESCRIPTION
J1-3	E0032220	CONNECTOR, DSUB 25PIN
L1	5286050500	COIL, 1.0UH K LK2125
L2	5286052100	COIL, 4.7UH K LK2125
P1	E0023510	CONNECTOR, 26FE-BT-VK-N
P2	E0023510	CONNECTOR, 26FE-BT-VK-N
P3	5336303300	PLUG, CONN. B3B-EH(WHT)
P4	E0023540	CONNECTOR, 32FE-BT-VK-N
P5	E0023450	CONNECTOR, 20FE-BT-VK-N
P6	E0023510	CONNECTOR, 26FE-BT-VK-N
P7	E0023540	CONNECTOR, 32FE-BT-VK-N
P8	E0023510	CONNECTOR, 26FE-BT-VK-N
P9	E0023510	CONNECTOR, 26FE-BT-VK-N
P10	5336374400	PLUG, CONN. B4P-VH
Q1	S0021762	TR, 2SC2712GRTE85L
R1, 2	R0000094	RES ARRAY, 8X47 J
R3	11985155	RES ARRAY, 8X2.2KJ
R4	R0074594	RES ARRAY, 1/16W 8X4.7K J
R5, 6	R0000094	RES ARRAY, 8X47 J
R7	11985155	RES ARRAY, 8X2.2K J
R8	R0074594	RES ARRAY, 1/16W 8X4.7K J
R9, 10	R0000094	RES ARRAY, 8X47 J
R11	11985155	RES ARRAY, 8X 2.2K
R12	R0074594	RES ARRAY, 1/16W 8X4.7K J
R13, 14	R0000094	RES ARRAY, 8X47 J
R15	11985155	RES ARRAY, 8X2.2K
R16	R0074594	RES ARRAY, 1/16W 8X4.7K J
R17, 18	R0000094	RES ARRAY, 8X47 J
R19	11985155	RES ARRAY, 8X2.2K
R20	R0074594	RES ARRAY, 1/16W 8X4.7K J
R83	R0074634	RES ARRAY, 1/16W 8X10K J
R84	R0074634	RES ARRAY, 1/16W 8X10K J
R85	R0074634	RES ARRAY, 1/16W 8X10K J
R86	R0074634	RES ARRAY, 1/16W 8X10K J
R87	R0074634	RES ARRAY, 1/16W 8X10K J
U1	S0029034	IC, TC74LCX240F
U2	S0029034	IC, TC74LCX240F
U3	S0029034	IC, TC74LCX240F
U4	5220121000	IC, HD74HC540FPEL
U5	5220121000	IC, HD74HC540FPEL
U6	5220121000	IC, HD74HC540FPEL
U7	5220116300	IC, HD74HC126FP
U8	S0029034	IC, TC74LCX240F
U9	5220116200	IC, HD74HC125FP
U10	5220063000	IC, TC74HC157AF
U11	S00190600A	IC, IOX
U12	S0024353	IC, DSP TMS57070FFT
U13	S00190600A	IC, IOX
U14	S0024353	IC, DSP TMS57070FFT
U15	S00190600A	IC, IOX
U16	S0024353	IC, DSP TMS57070FFT
U17	S00190600A	IC, IOX
U18	S0024353	IC, DSP TMS57070FFT
U19	S00190600A	IC, IOX
U20	S0024353	IC, DSP TMS57070FFT
U21-24	S00190600A	IC, IOX

MODULE PCB ASSY

REF. NO.	PARTS NO.	DESCRIPTION
U25	S0024353	IC, DSP TMS57070FFT
U26	S0024353	IC, DSP TMS57070FFT
U27	S0024353	IC, DSP TMS57070FFT
U28	S0020475	IC, MSM514260B-60JS
U29	S0020475	IC, MSM514260B-60JS
U30, 58	5220120800	IC, HD74HC163FPEL
U31	S0025574	IC, SN75124NS-ELL2000
U32, 33	5220120800	IC, HD74HC163FPEL
U34	S0025704	IC, LM1881M08A
U35	5220116000	IC, HD74HC74FP
U36	S0019964	IC, HD74HC123AFPEL
U37	5220123500	IC, MC74HC4046AF-FR1
U38, 39	S0025554	IC, HD74HC251FPEL
U40	S0025514	IC, MC74HC58FEL
U41	S0025544	IC, HD74HC27FPEL
U42	13445544	IC, TC7WU04F
U43, 72	13447922	IC, NJM78L05UA-TE1
U44	5220102000	IC, SN74S140NS
U45	5220124700	IC, HD74HC02FP
U46	S0021424	IC, HD74HC00FPEL
U47	5220093500	IC, TC74HC04AF-TP2
U48	S0000584	IC, HD74HC541FPEL
U49	S0030324	IC, MC74AC541MEL(TAPE L)
U50	S0000584	IC, HD74HC541FPEL
U51	5220093500	IC, TC74HC04AF-TP2
U52, 53	S0025554	IC, HD74HC251FPEL
U54	5220116500	IC, HD74HC151FP
U55	13444739	IC, 74HC4040F
U56	5220116000	IC, HD74HC74FP
U57	5220121000	IC, HD74HC540FPEL
U59	S0025564	IC, HD74HC283FPEL
U60-66	5220120800	IC, HD74HC163FPEL
U67	S0021424	IC, HD74HC00FPEL
U70	5220116000	IC, HD74HC74FP
U71	S0024284	IC, NJM 78L09UA-TE1
U73	S0025624	IC, TC7W139F-TE12L
U74	5220116000	IC, HD74HC74FP
U75	5220093500	IC, TC74HC04AF-TP2
U76	5220115700	IC, MC74HC08AF
U77	13445544	IC, TC7WU04F
U78	S0020144	IC, MC74HC4066FL2
U79	S0020064	IC, MC74HC4538AF LEFT
U80	13448037	IC, TL092CPST
U81	13448037	IC, TL092CPST
U82	5220116500	IC, HD74HC151FP
U83	S0025604	IC, TC74VHC245FEL
U84	S0020344	IC, TC74VHC541
U85	S0020344	IC, TC74VHC541
U86	S0020344	IC, TC74VHC541
U87	S0000584	IC, HD74HC541FPEL
U88	S0025503	IC, IO EXPANDER
U89	5220063000	IC, TC74HC157AF
U90	S0020274	IC, TC7S66FU(TE85L)
X1	E0036100	CRYSTAL OSC, 7.056MHZ

MIX PCB ASSY

REF. NO.	PARTS NO.	DESCRIPTION
	*E95059500A	PCB ASSY, MIX
	*E90059500A	PCB, MIX
J1	E0035600	JACK, NC3FAH1-0(XLR)
J2	E0038510	JACK, NC3MBH(XLR)
J3	E0038510	JACK, NC3MBH(XLR)
J4	E0035600	JACK, NC3FAH1-0(XLR)
J5	E0035600	JACK, NC3FAH1-0(XLR)
J6	E0035600	JACK, NC3FAH1-0(XLR)
J7	E0035600	JACK, NC3FAH1-0(XLR)
J8	E0016790	JACK, RCA 2P ORG NI
J9	E0016790	JACK, RCA 2P ORG NI
P1	E0023540	CONNECTOR, 32FE-BT-VK-N
P2	E0023540	CONNECTOR, 32FE-BT-VK-N
P3	E0023450	CONNECTOR, 20FE-BT-VK-N
P4	E0023540	CONNECTOR, 32FE-BT-VK-N
P5	E0023510	CONNECTOR, 26FE-BT-VK-N
P6	E0023510	CONNECTOR, 26FE-BT-VK-N
P7	5336374400	PLUG, CONN. B4P-VH
R96	R0000094	RES ARRAY, 8X47
R97	R0074634	RES ARRAY, 1/16W 8X10K J
R98	R0074634	RES ARRAY, 1/16W 8X10K J
R99	R0074634	RES ARRAY, 1/16W 8X10K J
U1	S0024353	IC, DSP TMS57070FFT
U2	S00190600A	IC, IOX
U3	S0020475	IC, MSM514260B-60JS
U4	S0024353	IC, DSP TMS57070FFT
U5	S00190600A	IC, IOX
U6	S0020475	IC, MSM514260B-60JS
U7	S0024353	IC, DSP TMS57070FFT
U8	S00190600A	IC, IOX
U9	S0020475	IC, MSM514260B-60JS
U10	S0024353	IC, DSP TMS57070FFT
U11	S00190600A	IC, IOX
U12	S00190600A	IC, IOX
U13	S0024353	IC, DSP TMS57070FFT
U14	S00190600A	IC, IOX
U15	S0024353	IC, DSP TMS57070FFT
U16	S00190600A	IC, IOX
U17	S0024353	IC, DSP TMS57070FFT
U18	S00190600A	IC, IOX
U19	S00190600A	IC, IOX
U20	S00190600A	IC, IOX
U21	S00190600A	IC, IOX
U22	S0017090	IC, YM3436D
U23	S00256300A	IC, PLD MIX KM-XW
U24	5220119800	IC, HD74HC174FP
U25	5220093500	IC, TC74HC04AF-TP2
U26	S0017090	IC, YM3436D
U27	S0017090	IC, YM3436D
U28	S0017090	IC, YM3436D
U29	S0017090	IC, YM3436D
U30	13447922	IC, NJM78L05UA-TE1
U31	5220119800	IC, HD74HC174FP
U32	5220119800	IC, HD74HC174FP
U33	S0021514	IC, YM3437C-FE2

MIX PCB ASSY

REF. NO.	PARTS NO.	DESCRIPTION
U34	S0021514	IC, YM3437C-FE2
U35	5220116500	IC, HD74HC151FP
U36	13444739	IC, 74HC4040F
U37	5220123100	IC, HD26LS31FP
U38	S0025514	IC, MC74HC58FEL
U39	5220123200	IC, HD26LS32FP
U40	5220123200	IC, HD26LS32FP
U41	5320065000	PULSE TRANSFORMER
U42	5320065000	PULSE TRANSFORMER
U43	S0000584	IC, HD74HC541FPEL
U44	S0030324	IC, MC74AC541MEL
U45	5220121000	IC, HD74HC540FPEL
U46	S0025604	IC, TC74VHC245FEL
U47	S0020344	IC, TC74VHC541
U48	S0020344	IC, TC74VHC541
U49	S0020344	IC, TC74VHC541
U50	S0000584	IC, HD74HC541FPEL
U51	S0001324	IC, TC7W04F
U52	S0001494	IC, TC7W08F-TE12L
U53	S0025503	IC, IO EXPANDER
U54-59	5292811100	EMI FILTER, 470PFT

MONITOR PCB ASSY

REF. NO.	PARTS NO.	DESCRIPTION
	*E95058600A	PCB ASSY, MONITOR
	*E90058600A	PCB, MONITOR
	*5555590000	PLATE A, EARTH
	*E00365500A	HARN ASSY, MON-PCB
	*E00394700A	HARN ASSY, MON-PCB2
D4-9	5224015020	DIODE, 1SS133T-77 FT
D11-16	5224015020	DIODE, 1SS133T-77 FT
D17-22	5224015020	DIODE, 1SS133T-77 FT
D101-401	5224015020	DIODE, 1SS133T-77 FT
D302, 402	5224015020	DIODE, 1SS133T-77 FT
D901, 902	5224015020	DIODE, 1SS133T-77 FT
J1	E0023540	CONNECTOR, 32FE-BT-VK-N
J2	E0032200	CONNECTOR, DSUB 9PIN
J101	E0035620	JACK, YKC21-3045(RCA 2P)
J102	5330018100	JACK, 3A-3A
K5	5290013800	RELAY, DF DF2-DC12V
K102, 302	5290013800	RELAY, DF DF2-DC12V
K301, 501	5290013800	RELAY, DF DF2-DC12V
K502	5290013800	RELAY, DF DF2-DC12V
L1	5286033520	COIL, CHOKE 4.7UH K(LAP2T)VT
P1	5336304000	PLUG, CONN. B10B-EH(WHT)
P6	5336307600	PLUG, CONN. B6B-EH-Y(YEL)
P10	5336304100	PLUG, CONN. B11B-EH(WHT)
P101, 201	E0038510	JACK, NC3MBH(XLR)
P102, 202	E0038510	JACK, NC3MBH(XLR)
P105	5336303200	PLUG, CONN. B2B-EH(WHT)
P205	5336305200	PLUG, CONN. B2B-EH-R(RED)
P301	5336305600	PLUG, CONN. B6B-EH-R(RED)
P302	5336307300	PLUG, CONN. B3B-EH-Y(YEL)
P303	5336303600	PLUG, CONN. B6B-EH(WHT)

MONITOR PCB ASSY

REF. NO.		PARTS NO.	DESCRIPTION
P304, 404		E0038510	JACK, NC3MBH(XLR)
P305		5336307200	PLUG, CONN. B2B-EH-Y(YEL)
P405		5336309200	PLUG, CONN. B2B-EH-K(BLK)
P505		5336303200	PLUG, CONN. B2B-EH(WHT)
P901		5336303300	PLUG, CONN. B3B-EH(WHT)
P902		5336305300	PLUG, CONN. B3B-EH-R(RED)
Q1-6		5232255720	TR, DIGITAL DTC124ESA
Q7, 8		5232254820	TR, DIGITAL DTA124ESA
Q15, 16		5232255720	TR, DIGITAL DTC124ESA
Q101-401		5230775020	TR, 2SC2878-B
Q302, 402		5230775020	TR, 2SC2878-B
R332, 432	⚠	5241226310	R, INCOMB. 3W 22Ω J FF
R51		R0027330	RES ARRAY, EXBF9E103J
R52		R0027330	RES ARRAY, EXBF9E103J
U3, 4		5220108700	IC, HD74HC541P
U5		5220097600	IC, HD74HC540P
U6		5220066700	IC, HD74HC14P
U7		5220070000	IC, HD74HC139P
U8		5220065900	IC, HD74HC00P
U101, 301		5220110200	IC, SM5840EP
U102, 302		S0025480	IC, PCM69AP
U103, 303		5220430500	IC, M5238P
U104, 304		5220431800	IC, NE5532AN
U105, 205		5220431800	IC, NE5532AN
U106		5220431800	IC, NE5532AN
U108		5220431800	IC, NE5532AN
U109, 209		5220431800	IC, NE5532AN
U305		5220431800	IC, NE5532AN
U306		5220431800	IC, NE5532AN
U307		5220441700	IC, TA7272P
U308, 408		5220431800	IC, NE5532AN
U901		5220445000	IC, NJM4565DD
U902		5220445000	IC, NJM4565DD
U903		5220445000	IC, NJM4565DD
U904		S0000223	IC, AK-5340-VS-E1

AUX MOTHER PCB ASSY

REF. NO.	PARTS NO.	DESCRIPTION
	*E95058500A	PCB ASSY, AUX MOTHER
	*E90058500A	PCB, AUX MOTHER
	*5555590000	PLATE A, EARTH
J1	E0023510	CONNECTOR, 26FE-BT-VK-N
J2	E0023450	CONNECTOR, 20FE-BT-VK-N
P1	5336303700	PLUG, CONN. B7B-EH(WHT)
P101-112	5336280500	PLUG, CONN. IL-SDD-15P-S2T
P201-204	5336280500	PLUG, CONN. IL-SDD-15P-S2T
P301-306	5336280500	PLUG, CONN. IL-SDD-15P-S2T
R51	R0027150	RES ARRAY, EXBF8E103J
U1-3	5220108700	IC, HD74HC541P
U4	5220066700	IC, HD74HC14P

AD PCB ASSY

REF. NO.	PARTS NO.	DESCRIPTION
	*E95058400A	PCB ASSY, AD
	*E90058400B	PCB, AD
	*5555590000	PLATE A, EARTH
D101-801	5224015020	DIODE, 1SS133T-77 FT
D102-802	5224015020	DIODE, 1SS133T-77 FT
D151-851	5224015020	DIODE, 1SS133T-77 FT
D152-852	5224015020	DIODE, 1SS133T-77 FT
J1	E0023450	CONNECTOR, 20FE-BT-VK-N
L1	5286033520	COIL, CHOKE 4.7UH K(LAP2T)VT
L101-801	5286033920	COIL, CHOKE 10UH K(LAP2T)VT
P1	5336303900	PLUG, CONN. B9B-EH(WHT)
P101-801	5336281000	PLUG, CONN. IL-SDD-20P-S2T
P151-851	5336281000	PLUG, CONN. IL-SDD-20P-S2T
R901	R0026890	RES ARRAY, EXBF5E103J
U1, 2	5220108700	IC, HD74HC541P
U101-801	S0000223	IC, AK-5340-VS-E1

MAIN CPU PCB ASSY

REF. NO.	PARTS NO.	DESCRIPTION
	*E95059600A	PCB ASSY, MAIN CPU
	*E90059600B	PCB, MAIN CPU
D1	S0022094	DIODE, 1SS355
D2	S0023194	DIODE, RB751V-40
D3	S0020714	ZENER DIODE, UDZ 2.0B
JP1	13125026	PLUG, CONN. CSP01-02-CC
P1-4	E0023510	CONNECTOR, 26FE-BT-VK-N
P5	5336374400	PLUG, CONN. B4P-VH
P6, 8	E0023510	CONNECTOR, 26FE-BT-VK-N
P7	E0023350	CONNECTOR, 10FE-BT-VK-N
Q1	13428277	TR, DTA124EKAT-146
Q2	13428287	TR, DTC124EKAT-146
R101-104	R0074634	RES ARRAY, 1/16W 8X10K J
R105, 106	R0074634	RES ARRAY, 1/16W 8X10K J
R107, 108	R0074634	RES ARRAY, 1/16W 8X10K J
R109, 110	R0074634	RES ARRAY, 1/16W 8X10K J
R111-115	R0074634	RES ARRAY, 1/16W 8X10K J
S1	5302109800	SW, TACT SKHHDA
U1	S0025123	IC, SH7604SF-28
U2	13447922	IC, NJM78L05UA-TE1
U3	S0026034	IC, TL7705CPS-B
U4, 5	S0020475	IC, MSM514260B-60JS
U6, 7	S0024454	IC, M66220FP-200D
U8, 9	S0028164	IC, SRAM M5M51008BFP
U10	S00264800D	ROM ASSY, MAIN23 MBM29F400BC
U10	E0033093	SOCKET, 44PIN SOP IC179
U11	S00264700D	ROM ASSY, MAIN01 MBM29F400BC
U11	E0033093	SOCKET, 44PIN SOP IC179
U12	5220124700	IC, HD74HC02FP
U13	5220049400	IC, UPD65013
U14	S0000584	IC, HD74HC541FPEL
U15	13445672	IC, HD74HC273F
U16	S0025524	IC, HD74HC147FPEL
U17	S0025594	IC, TC74VHC163FEL
U18	5220120700	IC, HD74HC153FPEL

MAIN CPU PCB ASSY

REF. NO.	PARTS NO.	DESCRIPTION
U19-21	13444686	IC, 74HCT574F
U22	S00256400A	IC, PLD MNCS02
U23	S00256500A	IC, PLD MNWT02
U24	S0025584	IC, TC74VHC138FEL
U25	S00256800A	IC, PLD DSPHIF
U26	S00256900A	IC, PLD IOXIF
U27, 33	S0025604	IC, TC74VHC245FEL
U28	S0003614	IC, MC74HCT541F
U29-31	S0025614	IC, TC74VHCT541AFEL
U32	S0020344	IC, TC74VHC541
U34, 35	S0025604	IC, TC74VHC245FEL
U36, 37	S0020344	IC, TC74VHC541
U38	S0000584	IC, HD74HC541FPEL
X1	E0036090	RESONATOR, HC-49/S3 6.144M

RS PCB ASSY

REF. NO.	PARTS NO.	DESCRIPTION
	*E95058700A	PCB ASSY, RS
	*E90058700B	PCB, RS
D1	5224017600	DIODE, DAN803
D2	5224017700	DIODE, DAP803
D3-17	5224015020	DIODE, 1SS133T-77 FT
J1	5330018100	JACK, 2P 3A-3A
J2	E0032200	CONNECTOR, DSUB 9PIN
J4	E0022450	CONNECTOR, DIN5 YKF51-5040
J5	5330514400	JACK, PIN 1P(BLK)
J6	E0035600	JACK, NC3FAH1-0(XLR)
J7	E0009030	JACK, MINI DIN 8P
J8	E0023410	CONNECTOR, 16FE-BT-VK-N
J9	E0023350	CONNECTOR, 10FE-BT-VK-N
L1-6	5286036200	COIL, LINE FILTER 20UH
P3	E0031950	CONNECTOR, D-SUB 15P PLUG
U1, 7	S0026730	IC, M5M34051P
U2	5220094900	IC, HD74LS05P
U3	5220065900	IC, HD74HC00P
U4	5228012400	PHOTO-COUPLER, PC-847
U5	5228013300	PHOTO-COUPLER, PC-900
U6	5220040100	IC, MC14049UB
U8-22	5292808620	EMI FILTER, EMC EMT 10000PFT
U23, 24	5292808020	EMI FILTER, EMC EMT 100PFT

MSTR MT PCB ASSY

REF. NO.	PARTS NO.	DESCRIPTION
	*E95056300A	PCB ASSY, MSTR MT
	*E90056300A	PCB, MSTR MT
D301-307	5224015020	DIODE, 1SS133T-77 FT
D308, 309	5225013500	LED, SLR-34VR3F(RED)
D310-315	5225030800	LED ARRAY, SLA-4651K(ORG)
D316-324	5225018500	LED, SLR-34DU3F
D318-324	5801199600	LED SPACER, LH-3- 3.5
D325	5225013600	LED, SLR-34MG3F(GRN)
D325	5801199600	LED SPACER, LH-3- 3.5
D326-335	5225018500	LED, SLR-34DU3F

MSTR MT PCB ASSY

REF. NO.	PARTS NO.	DESCRIPTION
D336-339	5225028300	LED INDICATOR, SL-1283
J301	E0023740	CONNECTOR, 20FE-ST-VK-N
J302	E0023830	CONNECTOR, 32FE-ST-VK-N
S301-307	5302104400	SW, TACT SKHCAA

MODE PCB ASSY

REF. NO.	PARTS NO.	DESCRIPTION
	*E95056400A	PCB ASSY, MODE
	*E90056400A	PCB, MODE
D101-126	5224015020	DIODE, 1SS133T-77 FT
D127, 128	S0026631	LED, LNJ876SKSAAB ORG
D129	S0025932	LED, LN276RPX-2U(TX) RED
D130	S0026631	LED, LNJ876SKSAAB ORG
D131, 132	S0025942	LED, LN376GPX(V)-(TX) GRN
D133	S0025932	LED, LN276RPX-2U(TX) RED
D134-138	S0026631	LED, LNJ876SKSAAB ORG
J101	E0023780	CONNECTOR, 24FE-ST-VK-N
S101-126	5302104400	SW, TACT SKHCAA

JOG PCB ASSY

REF. NO.	PARTS NO.	DESCRIPTION
	E95060400A	PCB ASSY, JOG
	E90060400A	PCB, JOG
J301	E0023620	CONNECTOR, 08FE-ST-VK-N
S301	E0000460	ENCODER, SRGPHJ

ST RTN PCB ASSY

REF. NO.	PARTS NO.	DESCRIPTION
	*E95057700A	PCB ASSY, ST RTN
	*E90057700B	PCB, ST RTN
D1, 2	5224015020	DIODE, 1SS133T-77 FT
D3	5225013600	LED, SLR-34MG3F(GRN)
D3	5336218200	SOCKET, CONN. 5244-02A
D101, 201	5224015020	DIODE, 1SS133T-77 FT
D102, 202	5224015020	DIODE, 1SS133T-77 FT
J1, 2	5336282500	SOCKET, CONN. IL-SDD-15S-S2L2
J101	5330017800	JACK, 2B-2B
L1	5286033920	COIL, CHOKE10UH K(LAP2T)VT
Q1	5230779520	TR, 2SC-1815 GR
Q2	5232260620	TR, DTA115ESA
R151	R00657900A	VAR RES, EVJC20 20K(RD)X2
U1	5220438500	IC, UPC358C
U101	5220431800	IC, NE5532AN
U102	S0000223	IC, AK-5340-VS-E1

INPUT A PCB ASSY

REF. NO.	PARTS NO.	DESCRIPTION
	*E95057400A	PCB ASSY, INPUT A
	*E90057400A	PCB, INPUT A
D101, 102	5224015020	DIODE, 1SS133T-77 FT
D103, 104	5224015020	DIODE, 1SS133T-77 FT
D105	5224015020	DIODE, 1SS133T-77 FT
D106	5225013600	LED, SLR-34MG3F(GRN)
D106	5336218200	SOCKET, CONN. 5244-02A
D107	5225013500	LED, SLR-34VR3F(RED)
D107	5336218200	SOCKET, CONN. 5244-02A
J102	5330017900	JACK, 3Z-3A
P1	5336283000	SOCKET, CONN. IL-SDD-20S-S2L2
P101	13121314	CONNECTOR, 3P S3B-EH
Q1	5232260620	TR, DTA115ESA
Q2	5230779520	TR, 2SC-1815 GR
Q101, 102	S0023392	TR, 2SB737S TP S
Q103, 104	5230780920	TR, 2SC2603 F
Q105, 106	5230012920	TR, 2SA1015 GR TPE2
R151	R00657800A	VAR RES, EVUE2J 10K(RD)
S101	E0003020	SW, SPUJ20 2KEYS 2POLES
S102	E0002820	SW, SPUJ12 1KEY 2POLES
U101	5220431800	IC, NE5532AN
U102	5220438500	IC, UPC358C

MSTR FDR PCB ASSY

REF. NO.	PARTS NO.	DESCRIPTION
	*E95055500A	PCB ASSY, MSTR FDR
	*E90055500A	PCB, MSTR FDR
J401	E0023620	CONNECTOR, 08FE-ST-VK-N
R401-405	R00658000A	VAR RES, RSA0N1119(5KB)

VR PCB ASSY

REF. NO.	PARTS NO.	DESCRIPTION
	*E95055600A	PCB ASSY, VR
	*E90055600A	PCB, VR
P501, 502	E00364900B	HARN ASSY, MONITOR
R501-503	R00658400A	VAR RES, RK14K12D0(10KAX2)
R504	R00658300A	VAR RES, RK11K1140(10KA)

L FADER PCB ASSY

REF. NO.	PARTS NO.	DESCRIPTION
	*E95055200A	PCB ASSY, L FADER
	*E90055200A	PCB, L FADER
J201	E0023640	CONNECTOR, 10FE-ST-VK-N
R201-208	R00658000A	VAR RES, RSA0N1119(5KB)

S FADER PCB ASSY

REF. NO.	PARTS NO.	DESCRIPTION
	E95055300A	PCB ASSY, S FADER
	E90055300A	PCB, S FADER
J101	E0023640	CONNECTOR, 10FE-ST-VK-N
R101-108	R00658100A	VAR RES, RS60N1119(5KB)

DSUB PCB ASSY

REF. NO.	PARTS NO.	DESCRIPTION
	*E95058800A	PCB ASSY, DSUB
	*E90058800A	PCB, DSUB
J100-102	5334079700	PLUG, CONN. BNC 1P
P100, 101	E0032220	CONNECTOR, DSUB 25PIN
P102, 103	E0023510	CONNECTOR, 26FE-BT-VK-N
P104	E00365400A	HARN ASSY, WORD TERM
S100	E0012570	SW, SSSF12 2-2 L06NS

LCD VR PCB ASSY

REF. NO.	PARTS NO.	DESCRIPTION
	*E95059900A	PCB ASSY, LCD VR
	*E90059900A	PCB, LCD VR
	E00365300A	HARN ASSY, LCD CONT
R101	R00658200A	VAR RES, RK09K1130(10KB)

SOLO VR PCB ASSY

REF. NO.	PARTS NO.	DESCRIPTION
	*E95055700A	PCB ASSY, SOLO VR
	*E90055700A	PCB, SOLO VR
P201	E00365200A	HARN ASSY, SOLO
R201	5282024800	1S1UVR11 5K(B)

XLR PCB ASSY

REF. NO.	PARTS NO.	DESCRIPTION
	*E95067300A	PCB ASSY, XLR
	*E90067300A	PCB, XLR
	E00393400A	HARN ASSY, XLR
J101	E0035590	JACK, NC3FAHR1-0(XLR)

HP PCB ASSY

REF. NO.	PARTS NO.	DESCRIPTION
	*E95058900A	PCB ASSY, HP
	*E90058900B	PCB, HP
J201	5330018100	JACK, 2P 3A-3A
P201	E00365000A	HARN ASSY, HP
U201 U202	5292808620	EMI FILTER, EMC EMT 10000PFT

POD PCB ASSY

REF. NO.	PARTS NO.	DESCRIPTION
	*E95056600A	PCB ASSY, POD
	*E90056600A	PCB, POD
D1-45	5224015020	DIODE, 1SS133T-77 FT
D46-66	S0026621	LED, LNJ376GKGADH GRN
P1, 2	E0023740	CONNECTOR, 20FE-ST-VK-N
P3	E0023830	CONNECTOR, 32FE-ST-VK-N
P4	E0023620	CONNECTOR, 08FE-ST-VK-N
S1-45	5302109800	SW, TACT SKHHDA
S46-65	E0035890	ENCODER, EC16B24104 L1=20
U1-7	5220066700	IC, HD74HC14P

TRANSPORT PCB ASSY

REF. NO.	PARTS NO.	DESCRIPTION
	*E95056700A	PCB ASSY, TRANSPORT
	*E95056700A	PCB, TRANSPORT
D201-224	5224015020	DIODE, 1SS133T-77 FT
D225-240	S0026631	LED, LNJ876SKSAAB ORG
D241	S0025942	LED, LN376GPX(V)-(TX) GRN
D242	S0025932	LED, LN276RPX-2U(TX) RED
D243	S0026631	LED, LNJ876SKSAAB ORG
J201	E0023780	CONNECTOR, 24FE-ST-VK-N
S201-213	5302104400	SW, TACT SKHCAA
S214-218	5300059400	SW, PUSH SKFSAA
S219-224	5302104400	SW, TACT SKHCAA

INPUT MT PCB ASSY

REF. NO.	PARTS NO.	DESCRIPTION
	*E95057200A	PCB ASSY, INPUT MT
	*E90057200A	PCB, INPUT MT
D1-8	M00572500A	LED ASSY, BAR METER 15DOT
D9-16	5224015020	DIODE, 1SS133T-77 FT
J1	E0023540	CONNECTOR, 32FE-BT-VK-N
S1-8	5302104400	SW, TACT SKHCAA

2TR IN PCB ASSY

REF. NO.	PARTS NO.	DESCRIPTION
	*E95058000A	PCB ASSY, 2TR IN
	*E90058000A	PCB, 2TR IN
	*E00394500A	HARN ASSY, PW MUTE
D701, 703	5224015020	DIODE, 1SS133T-77 FT
D702	5224542401	DIODE, ZENER RD10EB2 FR
J101, 201	E0035600	JACK, NC3FAH1-0(XLR)
J301	E0035620	JACK, YKC21-3045(RCA 2P)
K701, 702	5290013800	RELAY, DF DF2-DC12V
P1	E00365900A	HARN ASSY, 2TR IN
Q701	5230779520	TR, 2SC-1815 GR
U101, 301	5220431800	IC, NE5532AN

INPUT SW PCB ASSY

REF. NO.	PARTS NO.	DESCRIPTION
	*E95055100A	PCB ASSY, INPUT SW
	*E90055100A	PCB, INPUT SW
D1-8	S0025942	LED, LN376GPX(V)-(TX) GRN
D17-24	S0026631	LED, LNJ876SKSAAB ORG
D25-32	S0025932	LED, LN276RPX-2U(TX) RED
D33-40	S0026631	LED, LNJ876SKSAAB ORG
D41-64	5224015020	DIODE, 1SS133T-77 FT
D9-16	S0025932	LED, LN276RPX-2U(TX) RED
J1	E0023780	CONNECTOR, 24FE-ST-VK-N
J2	E0023660	CONNECTOR, 12FE-ST-VK-N
S1-24	5302104400	SW, TACT SKHCAA

LCD PCB ASSY

REF. NO.	PARTS NO.	DESCRIPTION
	*E95056900A	PCB ASSY, LCD
	*E90056900A	PCB, LCD
D1	5224019100	DIODE, EK14
D2	5224017120	DIODE, 1SR139-200 T-31
J1	E0023370	CONNECTOR, 12FE-BT-VK-N
J2	E0023660	CONNECTOR, 12FE-ST-VK-N
J4	5336375100	PLUG, CONNECTOR B2PS-VH
L1	5286019820	COIL, CHOKE 100UH K VT
L2	14727897	COIL, 680UH 10% (RCH-875)
U1	5347024900	DC-AC INVERTER, CXA-L10A
U2	5220448500	IC, NJM2360D

LCD ACCESS PCB ASSY

REF. NO.	PARTS NO.	DESCRIPTION
	*E95057000A	PCB ASSY, LCD ACCESS
	*E90057000A	PCB, LCD ACCESS
D301-322	5224015020	DIODE, 1SS133T-77 FT
D323	S0026631	LED, LNJ876SKSAAB ORG
J301	E0023710	CONNECTOR, 17FE-ST-VK-N
S301-322	5302104400	SW, TACT SKHCAA

MSTR FDR SW PCB ASSY

REF. NO.	PARTS NO.	DESCRIPTION
	E95056100A	PCB ASSY, MSTR FDR SW
	E90056100A	PCB, MSTR FDR SW
D301-305	S0025942	LED, LN376GPX(V)-(TX) GRN
D306-314	S0025932	LED, LN276RPX-2U(TX) RED
D315-319	S0026631	LED, LNJ876SKSAAB ORG
D320-328	5224015020	DIODE, 1SS133T-77 FT
P301	E0023740	CONNECTOR, 20FE-ST-VK-N
S301-309	5302104400	SW, TACT SKHCAA

CUT GROUP PCB ASSY

REF. NO.	PARTS NO.	DESCRIPTION
	*E95056000A	PCB ASSY, CUT GROUP
	*E90056000A	PCB, CUT GROUP
D101	S0025932	LED, LN276RPX-2U(TX) RED
D102	S0026631	LED, LNJ876SKSAAB ORG
D103-106	S0025942	LED, LN376GPX(V)-(TX) GRN
D107-112	S0026631	LED, LNJ876SKSAAB ORG
D113-116	S0025932	LED, LN276RPX-2U(TX) RED
D117-121	S0026631	LED, LNJ876SKSAAB ORG
D122-134	5224015020	DIODE, 1SS133T-77 FT
P101	E0023780	CONNECTOR, 24FE-ST-VK-N
S101-113	5302104400	SW, TACT SKHCAA

MONITOR SW PCB ASSY

REF. NO.		PARTS NO.	DESCRIPTION
		*E95055900A	PCB ASSY, MONITOR SW
		*E90055900A	PCB, MONITOR SW
D201-210		S0026631	LED, LNJ876SKSAAB ORG
D211, 212		S0026631	LED, LNJ876SKSAAB ORG
D213, 216		S0025932	LED, LN276RPX-2U(TX) RED
D214, 215		S0026631	LED, LNJ876SKSAAB ORG
D217-231		5224015020	DIODE, 1SS133T-77 FT
P201		E0023740	CONNECTOR, 20FE-ST-VK-N
S201-215		5302104400	SW, TACT SKHCAA

PW CNT PCB ASSY

REF. NO.		PARTS NO.	DESCRIPTION
		*E95059200A	PCB ASSY, PW CNT
		*E90059200B	PCB, PW CNT
		*5555590000	PLATE A, EARTH
D101, 102		5224013210	DIODE, DS135 D FA4 FF
D103		5224013200	DIODE, DS135 D FR
D104		5224013200	DIODE, DS135 D FR
D301		S0025990	DIODE, D1NS6
F1	⚠	E0040210	T-LAG FUSE, 2A 250V
L1		E0039950	COIL, NAC-05-0050(50UH 5A)
L302		E0036600	COIL, ELC15E102
P1-4		5336374400	PLUG, CONN. B4P-VH
P5		5336374500	PLUG, CONN. B5P-VH
P11		5336374600	PLUG, CONN. B6P-VH
P12		5336374400	PLUG, CONN. B4P-VH
P13		5336374300	PLUG, CONN. B3P-VH
P101		5336303900	PLUG, CONN. B9B-EH(WHT)
P102		5336303700	PLUG, CONN. B7B-EH(WHT)
P103		5336304000	PLUG, CONN. B10B-EH(WHT)
U101		13447952	IC, NJM7805FA
U301		S0026220	IC, LM2577T-ADJ

PW SW PCB ASSY

REF. NO.		PARTS NO.	DESCRIPTION
		*E95059100A	PCB ASSY, PW SW
		*E90059100B	PCB, PW SW
		*E00364500A	HARN ASSY, POWER FG
C903	⚠	E0022570	SPK KILLER, 0.0047UF 250V
F901	⚠	E0034560	CLIP FUSE, H0446
P902		E0042990	CONNECTOR, S2P3-VH
S901	⚠	5300060700	SW, PUSH SDDLD1248A

16. SCHEMATIC DIAGRAMS

回路図

CONTENTS 目次

WIRING DIAGRAM (1/3) ..... Page 1/50
WIRING DIAGRAM (2/3) ..... Page 2/50
WIRING DIAGRAM (3/3) ..... Page 3/50
MODULE PCB (1/9) ..... Page 4/50
MODULE PCB (2/9) ..... Page 5/50
MODULE PCB (3/9) ..... Page 6/50
MODULE PCB (4/9) ..... Page 7/50
MODULE PCB (5/9) ..... Page 8/50
MODULE PCB (6/9) ..... Page 9/50
MODULE PCB (7/9) ..... Page 10/50
MODULE PCB (8/9) ..... Page 11/50
MODULE PCB (9/9) ..... Page 12/50
MAIN CPU PCB (1/4) ..... Page 13/50
MAIN CPU PCB (2/4) ..... Page 14/50
MAIN CPU PCB (3/4) ..... Page 15/50
MAIN CPU PCB (4/4) ..... Page 16/50
PANEL CPU PCB (1/7) ..... Page 17/50
PANEL CPU PCB (2/7) ..... Page 18/50
PANEL CPU PCB (3/7) ..... Page 19/50
PANEL CPU PCB (4/7) ..... Page 20/50
PANEL CPU PCB (5/7) ..... Page 21/50
PANEL CPU PCB (6/7) ..... Page 22/50
PANEL CPU PCB (7/7) ..... Page 23/50
MIX PCB (1/8) ..... Page 24/50
MIX PCB (2/8) ..... Page 25/50
MIX PCB (3/8) ..... Page 26/50
MIX PCB (4/8) ..... Page 27/50
MIX PCB (5/8) ..... Page 28/50
MIX PCB (6/8) ..... Page 29/50
MIX PCB (7/8) ..... Page 30/50
MIX PCB (8/8) ..... Page 31/50
INPUT A PCB, XLR PCB ..... Page 32/50
AUX MOTHER PCB ..... Page 33/50
AUX SND PCB ..... Page 34/50
MX INS PCB ..... Page 35/50
ST RTN PCB ..... Page 36/50
MONITOR PCB (1/2) ..... Page 37/50
MONITOR PCB (2/2) ..... Page 38/50
AD PCB, 2TR IN PCB, HP PCB ..... Page 39/50
MSTR FDR PCB, VR PCB, SOLO VR PCB, S FADER PCB, L FADER PCB ..... Page 40/50
LCD PCB, LCD VR PCB, MODE PCB ..... Page 41/50
INPUT SW PCB, TRANSPORT PCB, JOG PCB ..... Page 42/50
MSTR MT PCB ..... Page 43/50
INPUT MT PCB ..... Page 44/50
POD PCB (1/2) ..... Page 45/50
POD PCB (2/2) ..... Page 46/50
LCD ACCESS PCB, MSTR FDR SW PCB ..... Page 47/50
MONITOR SW PCB, CUT GROUP PCB ..... Page 48/50
RS PCB, DSUB PCB ..... Page 49/50
POWER SUPPLY SECTION ..... Page 50/50

SCHEMATIC DIAGRAM TM-D8000 WIRING DIAGRAM (1/3)

Digital Mixing Console **TM-D8000**

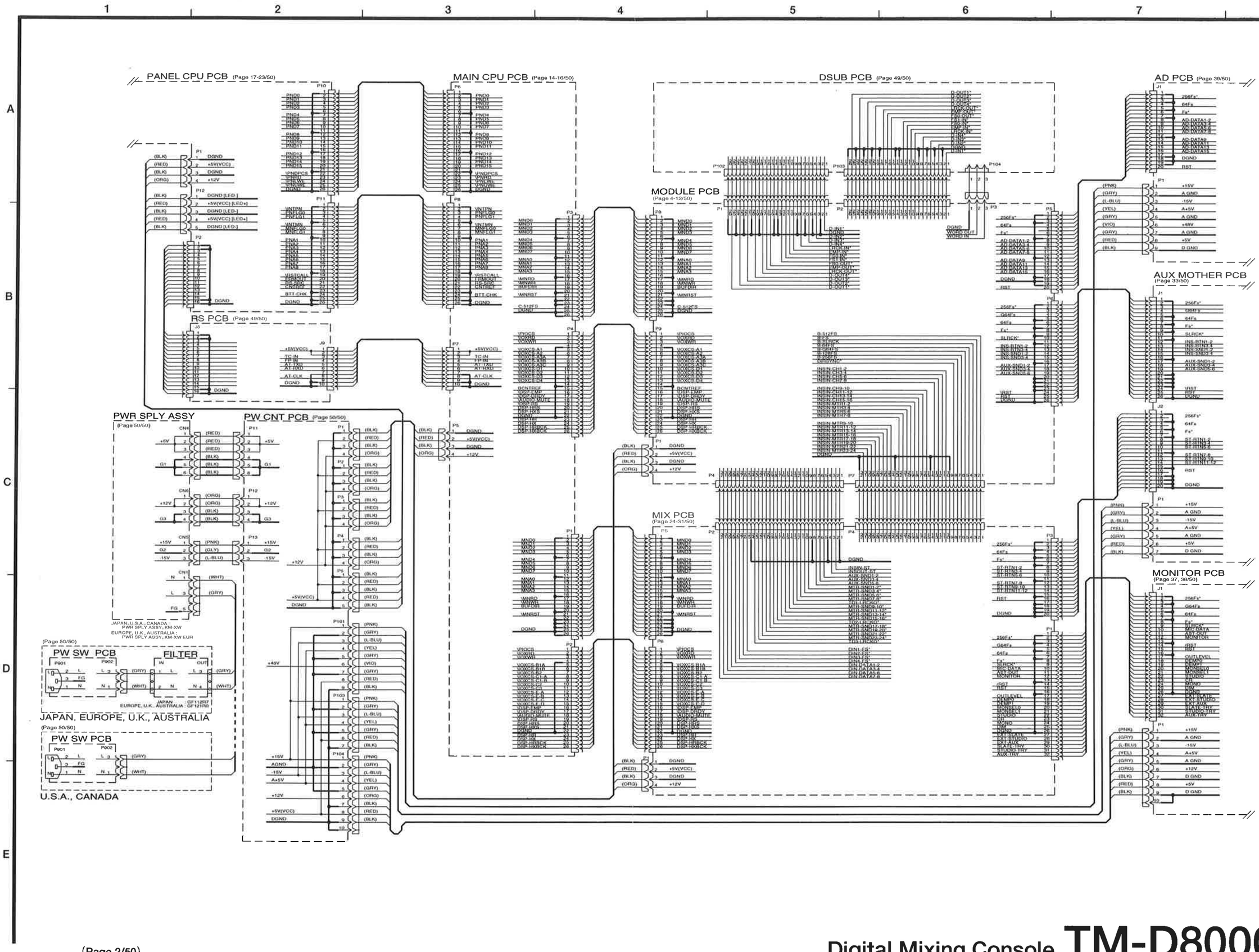

Digital Mixing Console **TM-D8000**

Digital Mixing Console **TM-D8000**

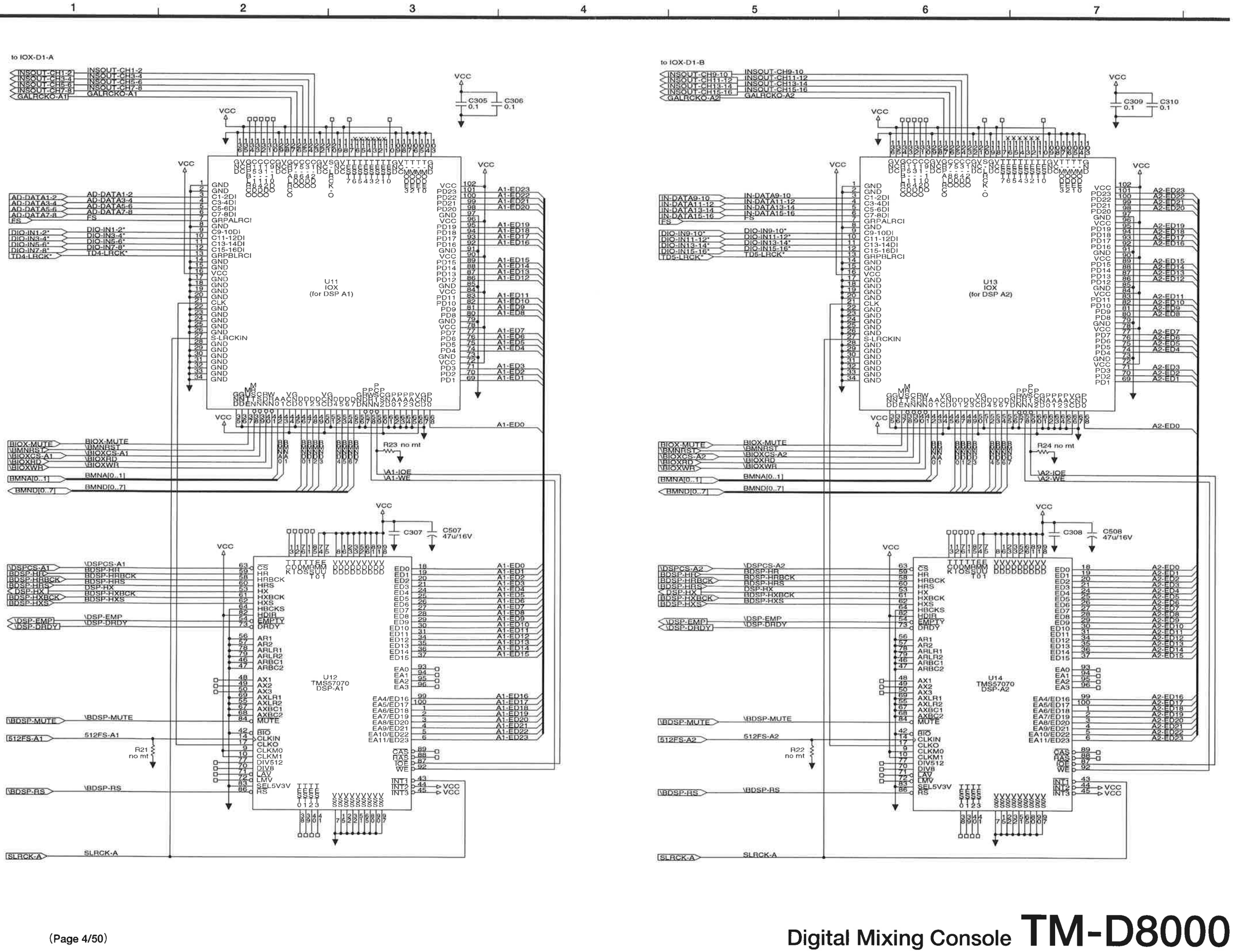
to IOX-D1-A
INSOUT-CH1-2
INSOUT-CH3-4
INSOUT-CH5-6
INSOUT-CH7-8
GALRCKO-A1
VCC
C305 0.1
C306 0.1
U11
IOX
(for DSP A1)
AD-DATA1-2
AD-DATA3-4
AD-DATA5-6
AD-DATA7-8
FS
DIO-IN1-2*
DIO-IN3-4*
DIO-IN5-6*
DIO-IN7-8*
TD4-LRCK*
S-LRCKIN
A1-ED0
BIOX-MUTE
\BMNRST
\BIOXCS-A1
\BIOXRD
\BIOXWR
BMNA[0..1]
BMND[0..7]
R23 no mt
\A1-IOE
\A1-WE
C307
C507 47u/16V
U12
TMS57070
DSP-A1
\DSPCS-A1
\BDSP-HR
\BDSP-HRBCK
\BDSP-HRS
\BDSP-HX
\BDSP-HXBCK
\BDSP-HXS
\DSP-EMP
\DSP-DRDY
A1-ED0
A1-ED1
A1-ED2
A1-ED3
A1-ED4
A1-ED5
A1-ED6
A1-ED7
A1-ED8
A1-ED9
A1-ED10
A1-ED11
A1-ED12
A1-ED13
A1-ED14
A1-ED15
A1-ED16
A1-ED17
A1-ED18
A1-ED19
A1-ED20
A1-ED21
A1-ED22
A1-ED23
\BDSP-MUTE
512FS-A1
R21
no mt
\BDSP-RS
SLRCK-A
to IOX-D1-B
INSOUT-CH9-10
INSOUT-CH11-12
INSOUT-CH13-14
INSOUT-CH15-16
GALRCKO-A2
C309 0.1
C310 0.1
U13
IOX
(for DSP A2)
IN-DATA9-10
IN-DATA11-12
IN-DATA13-14
IN-DATA15-16
FS
DIO-IN9-10*
DIO-IN11-12*
DIO-IN13-14*
DIO-IN15-16*
TD5-LRCK*
S-LRCKIN
A2-ED0
BIOX-MUTE
\BMNRST
\BIOXCS-A2
\BIOXRD
\BIOXWR
BMNA[0..1]
BMND[0..7]
R24 no mt
\A2-IOE
\A2-WE
C308
C508 47u/16V
U14
TMS57070
DSP-A2
\DSPCS-A2
\BDSP-HR
\BDSP-HRBCK
\BDSP-HRS
\BDSP-HX
\BDSP-HXBCK
\BDSP-HXS
\DSP-EMP
\DSP-DRDY
A2-ED0
A2-ED1
A2-ED2
A2-ED3
A2-ED4
A2-ED5
A2-ED6
A2-ED7
A2-ED8
A2-ED9
A2-ED10
A2-ED11
A2-ED12
A2-ED13
A2-ED14
A2-ED15
A2-ED16
A2-ED17
A2-ED18
A2-ED19
A2-ED20
A2-ED21
A2-ED22
A2-ED23
\BDSP-MUTE
512FS-A2
R22
no mt
\BDSP-RS
SLRCK-A

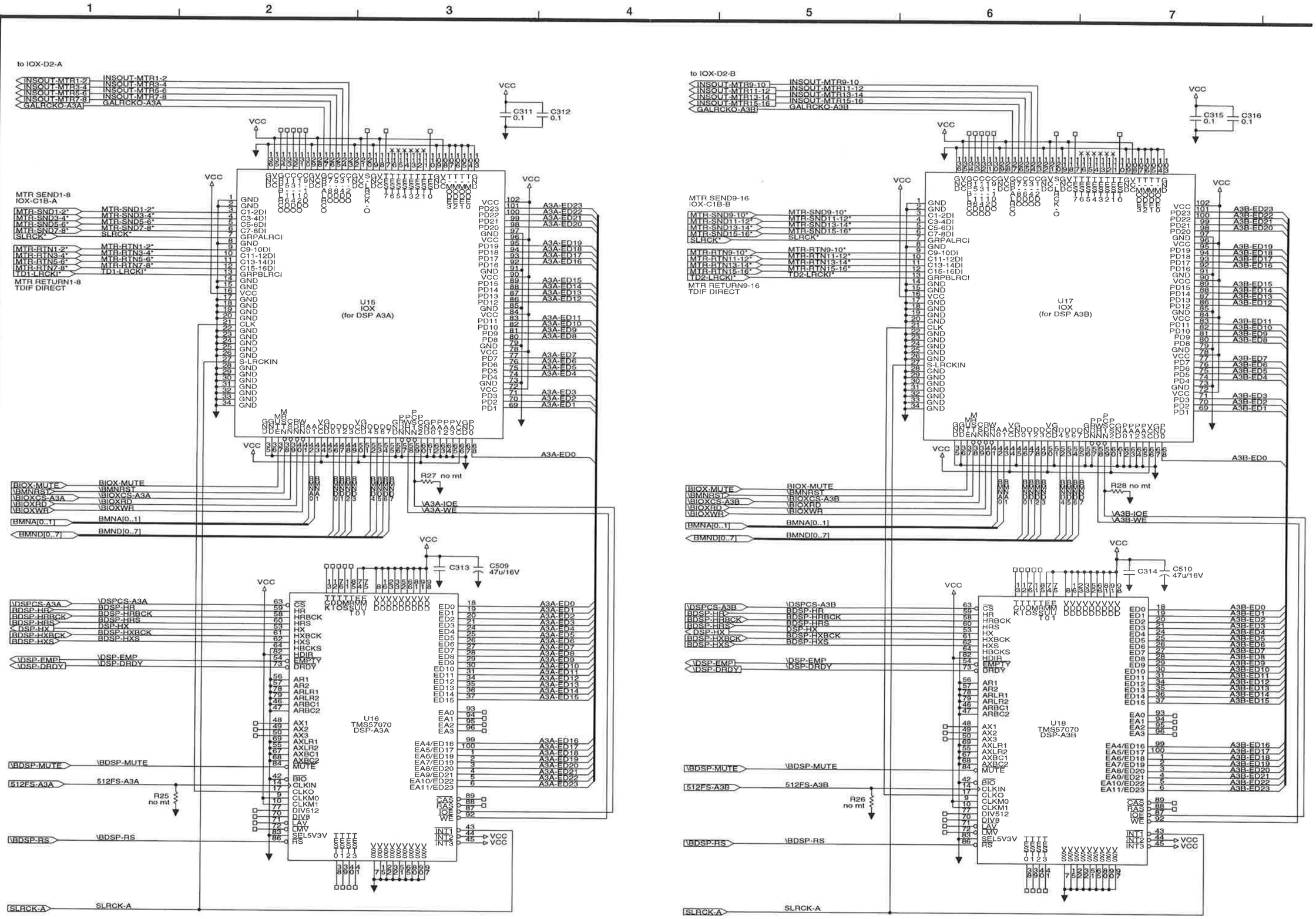
1
2
3
4
5
6
7
A
B
C
D
E
to IOX-D2-A
INSOUT-MTR1-2
INSOUT-MTR3-4
INSOUT-MTR5-6
INSOUT-MTR7-8
GALRCKO-A3A
VCC
C311 0.1
C312 0.1
MTR SEND1-8
IOX-C1B-A
MTR-SND1-2*
MTR-SND3-4*
MTR-SND5-6*
MTR-SND7-8*
SLRCK*
MTR-RTN1-2*
MTR-RTN3-4*
MTR-RTN5-6*
MTR-RTN7-8*
TD1-LRCKI*
MTR RETURN1-8
TDIF DIRECT
U15
IOX
(for DSP A3A)
A3A-ED0
A3A-ED1
A3A-ED2
A3A-ED3
A3A-ED4
A3A-ED5
A3A-ED6
A3A-ED7
A3A-ED8
A3A-ED9
A3A-ED10
A3A-ED11
A3A-ED12
A3A-ED13
A3A-ED14
A3A-ED15
A3A-ED16
A3A-ED17
A3A-ED18
A3A-ED19
A3A-ED20
A3A-ED21
A3A-ED22
A3A-ED23
S-LRCKIN
BIOX-MUTE
\BMNRST
\BIOXCS-A3A
\BIOXRD
\BIOXWR
BMNA[0..1]
BMND[0..7]
R27 no mt
A3A-IOE
A3A-WE
\DSPCS-A3A
BDSP-HR
BDSP-HRBCK
BDSP-HRS
DSP-HX
BDSP-HXBCK
BDSP-HXS
\DSP-EMP
\DSP-DRDY
U16
TMS57070
DSP-A3A
\BDSP-MUTE
512FS-A3A
R25
no mt
\BDSP-RS
SLRCK-A
to IOX-D2-B
INSOUT-MTR9-10
INSOUT-MTR11-12
INSOUT-MTR13-14
INSOUT-MTR15-16
GALRCKO-A3B
C315 0.1
C316 0.1
MTR SEND9-16
IOX-C1B-B
MTR-SND9-10*
MTR-SND11-12*
MTR-SND13-14*
MTR-SND15-16*
SLRCK*
MTR-RTN9-10*
MTR-RTN11-12*
MTR-RTN13-14*
MTR-RTN15-16*
TD2-LRCKI*
MTR RETURN9-16
TDIF DIRECT
U17
IOX
(for DSP A3B)
A3B-ED0
A3B-ED1
A3B-ED2
A3B-ED3
A3B-ED4
A3B-ED5
A3B-ED6
A3B-ED7
A3B-ED8
A3B-ED9
A3B-ED10
A3B-ED11
A3B-ED12
A3B-ED13
A3B-ED14
A3B-ED15
A3B-ED16
A3B-ED17
A3B-ED18
A3B-ED19
A3B-ED20
A3B-ED21
A3B-ED22
A3B-ED23
S-LRCKIN
BIOX-MUTE
\BMNRST
\BIOXCS-A3B
\BIOXRD
\BIOXWR
BMNA[0..1]
BMND[0..7]
R28 no mt
A3B-IOE
A3B-WE
\DSPCS-A3B
BDSP-HR
BDSP-HRBCK
BDSP-HRS
DSP-HX
BDSP-HXBCK
BDSP-HXS
\DSP-EMP
\DSP-DRDY
U18
TMS57070
DSP-A3B
\BDSP-MUTE
512FS-A3B
R26
no mt
\BDSP-RS
SLRCK-A

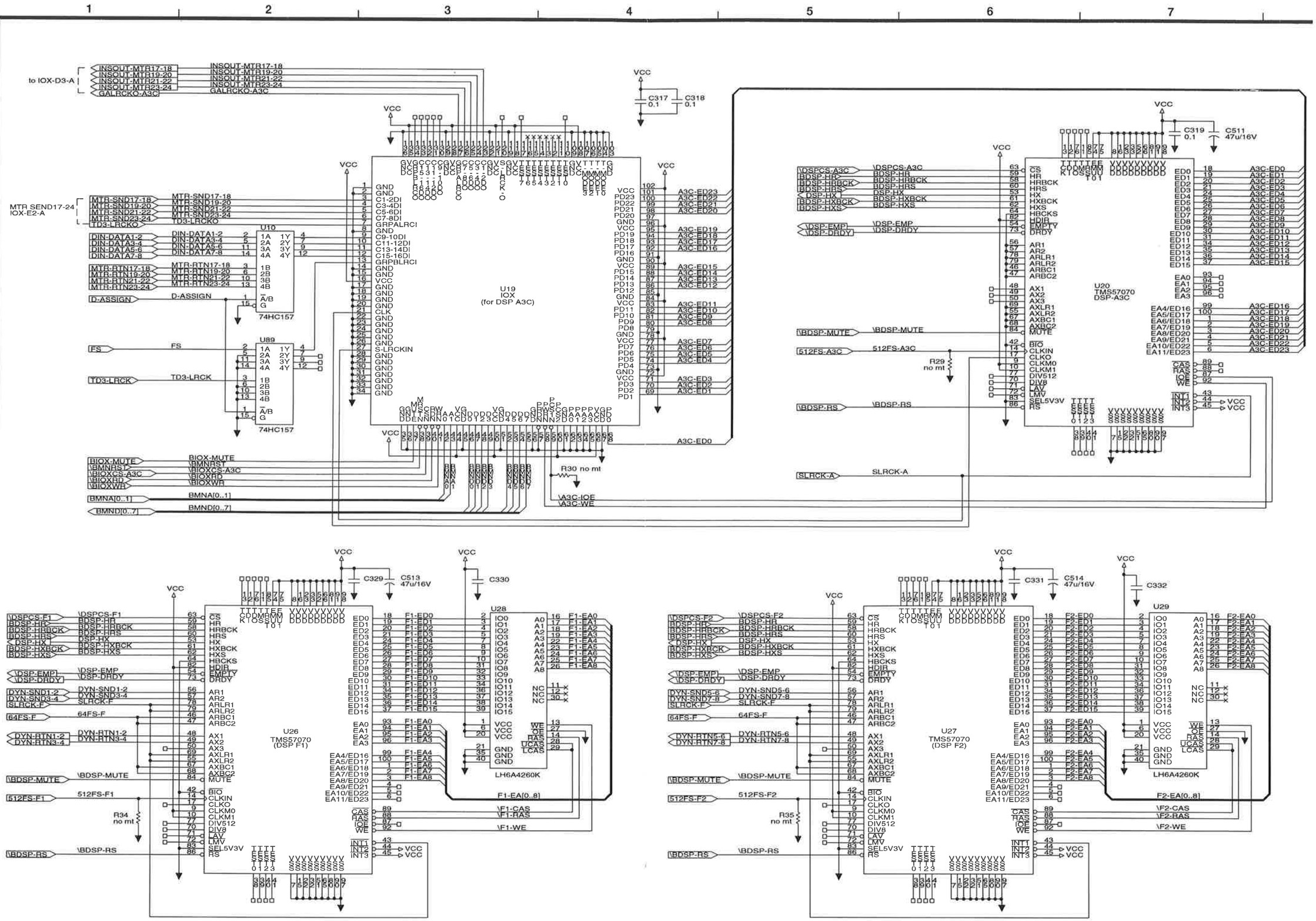
1
2
3
4
5
6
7
A
B
C
D
E
to IOX-D3-A
INSOUT-MTR17-18
INSOUT-MTR19-20
INSOUT-MTR21-22
INSOUT-MTR23-24
GALRCKO-A3C
MTR SEND17-24
IOX-E2-A
MTR-SND17-18
MTR-SND19-20
MTR-SND21-22
MTR-SND23-24
TD3-LRCKO
DIN-DATA1-2
DIN-DATA3-4
DIN-DATA5-6
DIN-DATA7-8
MTR-RTN17-18
MTR-RTN19-20
MTR-RTN21-22
MTR-RTN23-24
D-ASSIGN
FS
TD3-LRCK
U10
U89
74HC157
U19
IOX
(for DSP A3C)
S-LRCKIN
A3C-ED0
A3C-ED23
A3C-ED22
A3C-ED21
A3C-ED20
A3C-ED19
A3C-ED18
A3C-ED17
A3C-ED16
A3C-ED15
A3C-ED14
A3C-ED13
A3C-ED12
A3C-ED11
A3C-ED10
A3C-ED9
A3C-ED8
A3C-ED7
A3C-ED6
A3C-ED5
A3C-ED4
A3C-ED3
A3C-ED2
A3C-ED1
C317 0.1
C318 0.1
C319 0.1
C511 47u/16V
U20
TMS57070
DSP-A3C
\DSPCS-A3C
BDSP-HR
BDSP-HRBCK
BDSP-HRS
DSP-HX
BDSP-HXBCK
BDSP-HXS
\DSP-EMP
\DSP-DRDY
\BDSP-MUTE
512FS-A3C
R29
no mt
\BDSP-RS
SLRCK-A
R30 no mt
VA3C-IOE
VA3C-WE
BIOX-MUTE
\BMNRST
\BIOXCS-A3C
BIOXRD
\BIOXWR
BMNA[0..1]
BMND[0..7]
C329
C513
47u/16V
C330
U26
TMS57070
(DSP F1)
LH6A4260K
F1-EA[0..8]
\F1-CAS
\F1-RAS
\F1-WE
R34
no mt
C331
C514
47u/16V
C332
U27
TMS57070
(DSP F2)
F2-EA[0..8]
\F2-CAS
\F2-RAS
\F2-WE
R35
no mt

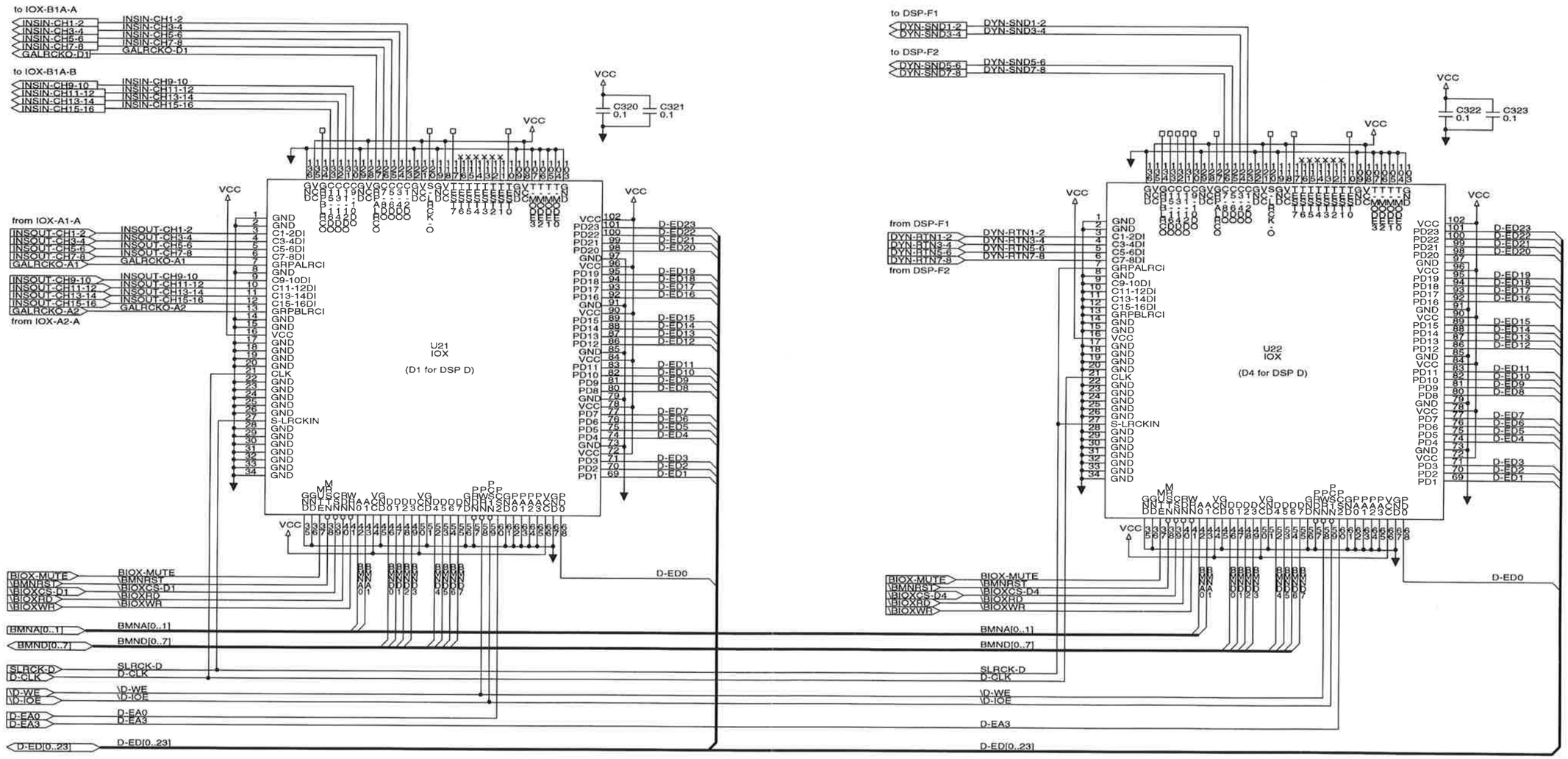

from/to MIX PCB

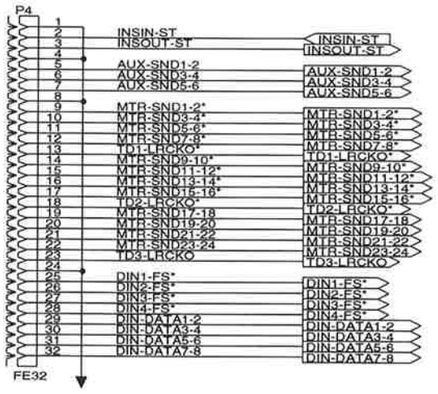

from/to MIX PCB

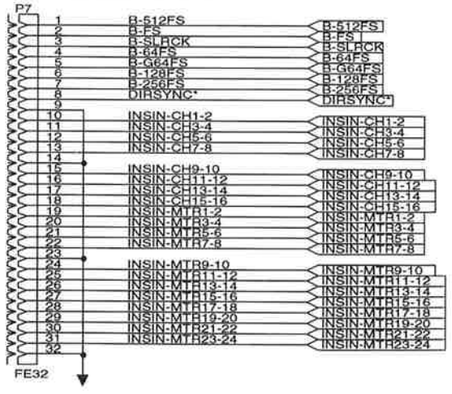

from/to INPUT PCB

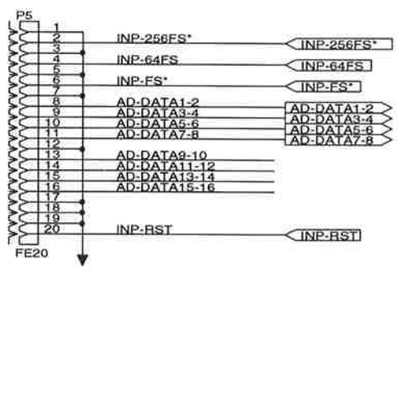

from/to MIXINS PCB

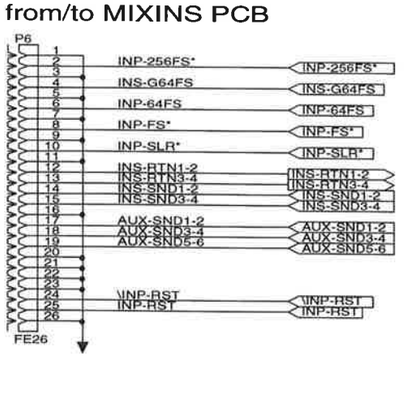

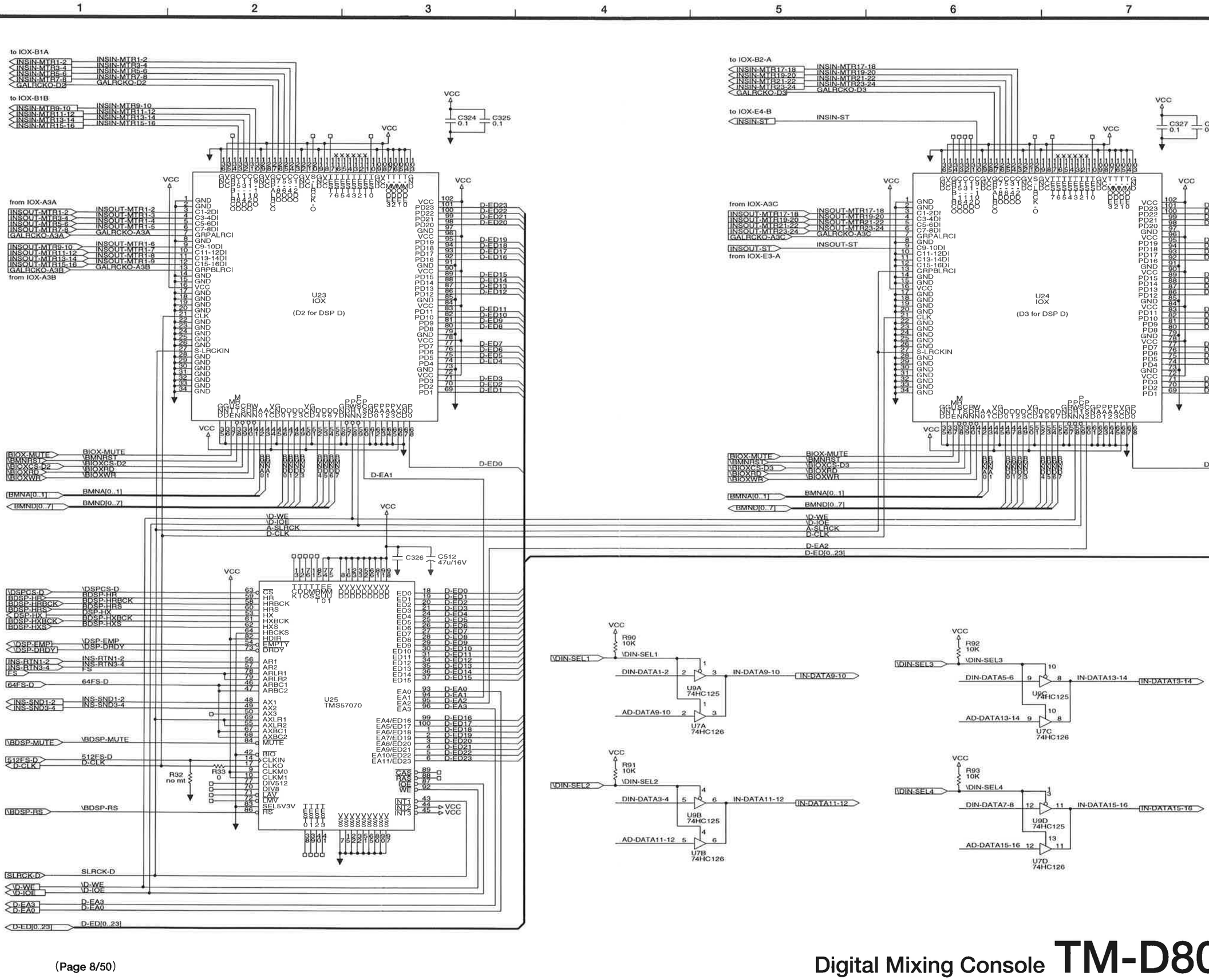
1
2
3
4
5
6
7
A
B
C
D
E
to IOX-B1A
INSIN-MTR1-2
INSIN-MTR3-4
INSIN-MTR5-6
INSIN-MTR7-8
GALRCKO-D2
to IOX-B1B
INSIN-MTR9-10
INSIN-MTR11-12
INSIN-MTR13-14
INSIN-MTR15-16
VCC
C324 0.1
C325 0.1
from IOX-A3A
INSOUT-MTR1-2
INSOUT-MTR3-4
INSOUT-MTR5-6
INSOUT-MTR7-8
GALRCKO-A3A
INSOUT-MTR9-10
INSOUT-MTR11-12
INSOUT-MTR13-14
INSOUT-MTR15-16
GALRCKO-A3B
from IOX-A3B
U23
IOX
(D2 for DSP D)
D-ED0
D-EA1
BIOX-MUTE
\BMNRST
\BIOXCS-D2
\BIOXRD
\BIOXWR
BMNA[0..1]
BMND[0..7]
\D-WE
\D-IOE
A-SLRCK
D-CLK
C326
C512 47u/16V
\DSPCS-D
BDSP-HR
BDSP-HRBCK
BDSP-HRS
DSP-HX
BDSP-HXBCK
BDSP-HXS
\DSP-EMP
\DSP-DRDY
INS-RTN1-2
INS-RTN3-4
FS
64FS-D
INS-SND1-2
INS-SND3-4
\BDSP-MUTE
512FS-D
D-CLK
R32 no mt
R33 0
\BDSP-RS
SLRCK-D
\D-WE
\D-IOE
D-EA3
D-EA0
D-ED[0..23]
U25
TMS57070
(Page 8/50)
to IOX-B2-A
INSIN-MTR17-18
INSIN-MTR19-20
INSIN-MTR21-22
INSIN-MTR23-24
GALRCKO-D3
to IOX-E4-B
INSIN-ST
C327 0.1
C328 0.1
from IOX-A3C
INSOUT-MTR17-18
INSOUT-MTR19-20
INSOUT-MTR21-22
INSOUT-MTR23-24
GALRCKO-A3C
INSOUT-ST
from IOX-E3-A
U24
IOX
(D3 for DSP D)
D-EA2
D-ED[0..23]
R90 10K
\DIN-SEL1
DIN-DATA1-2
IN-DATA9-10
AD-DATA9-10
U9A 74HC125
U7A 74HC126
R91 10K
\DIN-SEL2
DIN-DATA3-4
IN-DATA11-12
AD-DATA11-12
U9B 74HC125
U7B 74HC126
R92 10K
\DIN-SEL3
DIN-DATA5-6
IN-DATA13-14
AD-DATA13-14
U9C 74HC125
U7C 74HC126
R93 10K
\DIN-SEL4
DIN-DATA7-8
IN-DATA15-16
AD-DATA15-16
U9D 74HC125
U7D 74HC126

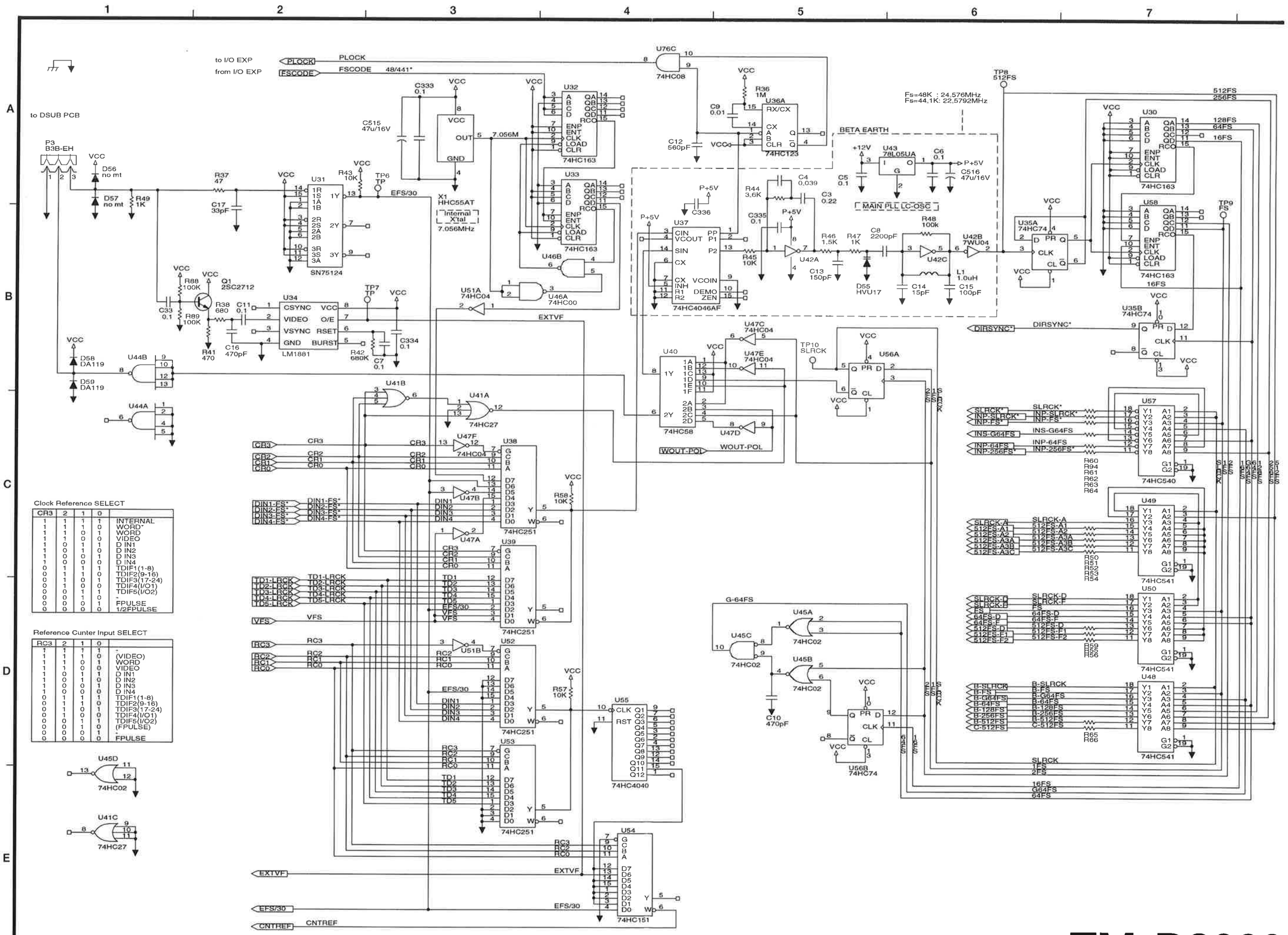
1
2
3
4
5
6
7
A
B
C
D
E
to I/O EXP
from I/O EXP
PLOCK
FSCODE
48/441*
to DSUB PCB
P3
B3B-EH
D56
no mt
D57
no mt
R49
1K
R37
47
C17
33pF
U31
SN75124
R43
10K
TP6
TP
EFS/30
X1
HHC55AT
Internal
X'tal
7.056MHz
C333
0.1
C515
47u/16V
7.056M
U32
U33
74HC163
U46B
U46A
74HC00
U51A
74HC04
EXTVF
U76C
74HC08
R36
1M
U36A
74HC123
C9
0.01
C12
560pF
Fs=48K : 24.576MHz
Fs=44.1K: 22.5792MHz
BETA EARTH
U43
78L05UA
+12V
C6
0.1
C516
47u/16V
P+5V
C5
0.1
MAIN PLL LC-OSC
C4
0.039
C3
0.22
C336
R44
3.6K
C335
0.1
U37
74HC4046AF
R45
10K
U42A
R46
1.5K
R47
1K
C8
2200pF
R48
100k
U42B
7WU04
U42C
L1
1.0uH
C14
15pF
C15
100pF
D55
HVU17
TP8
512FS
TP9
FS
U30
U58
74HC163
16FS
U35A
74HC74
U35B
DIRSYNC*
R88
100K
Q1
2SC2712
R38
680
C11
0.1
R89
100K
C33
0.1
R41
470
C16
470pF
U34
LM1881
TP7
TP
R42
680K
C7
0.1
C334
0.1
D58
DA119
D59
DA119
U44B
U44A
U41B
U41A
74HC27
U47C
74HC04
U47E
74HC04
U40
74HC58
U47D
WOUT-POL
TP10
SLRCK
U56A
U57
74HC540
SLRCK*
INP-SLRCK*
INP-FS*
INS-G64FS
INP-64FS
INP-256FS*
R60
R94
R61
R62
R63
R64
U49
74HC541
U50
U48
B-SLRCK
B-FS
B-G64FS
B-64FS
B-128FS
B-256FS
B-512FS
C-512FS
R65
R66
SLRCK
1FS
2FS
16FS
G64FS
64FS
G-64FS
U45A
U45C
U45B
74HC02
C10
470pF
U56B
74HC74
CR3
CR2
CR1
CR0
U47F
74HC04
U38
U47B
U47A
U39
74HC251
DIN1-FS*
DIN2-FS*
DIN3-FS*
DIN4-FS*
DIN1
DIN2
DIN3
DIN4
R58
10K
TD1-LRCK
TD2-LRCK
TD3-LRCK
TD4-LRCK
TD5-LRCK
TD1
TD2
TD3
TD4
TD5
VFS
U51B
U52
R57
10K
U55
74HC4040
U53
U54
74HC151
RC3
RC2
RC1
RC0
CNTREF
Clock Reference SELECT
CR3 2 1 0
1 1 1 1 INTERNAL
1 1 1 0 WORD*
1 1 0 1 WORD
1 1 0 0 VIDEO
1 0 1 1 D IN1
1 0 1 0 D IN2
1 0 0 1 D IN3
1 0 0 0 D IN4
0 1 1 1 TDIF1(1-8)
0 1 1 0 TDIF2(9-16)
0 1 0 1 TDIF3(17-24)
0 1 0 0 TDIF4(I/O1)
0 0 1 1 TDIF5(I/O2)
0 0 1 0 -
0 0 0 1 FPULSE
0 0 0 0 1/2FPULSE
Reference Cunter Input SELECT
RC3 2 1 0
1 1 1 1 -
1 1 1 0 (VIDEO)
1 1 0 1 WORD
1 1 0 0 VIDEO
1 0 1 1 D IN1
1 0 1 0 D IN2
1 0 0 1 D IN3
1 0 0 0 D IN4
0 1 1 1 TDIF1(1-8)
0 1 1 0 TDIF2(9-16)
0 1 0 1 TDIF3(17-24)
0 1 0 0 TDIF4(I/O1)
0 0 1 1 TDIF5(I/O2)
0 0 1 0 (FPULSE)
0 0 0 1 -
0 0 0 0 FPULSE
U45D
74HC02
U41C
74HC27

SCHEMATIC DIAGRAM **TM-D8000** MODULE PCB (7/9)

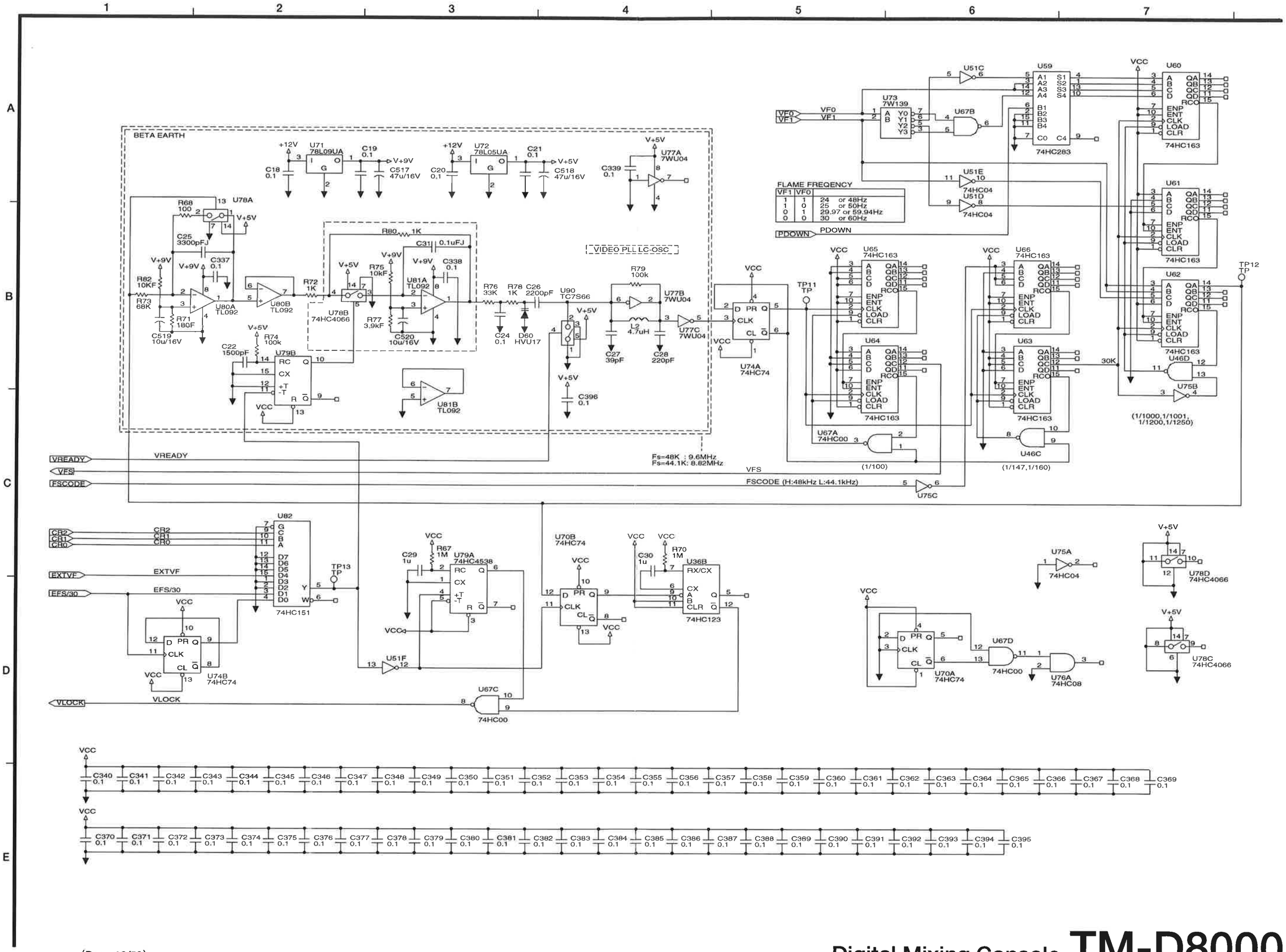

Digital Mixing Console **TM-D8000**

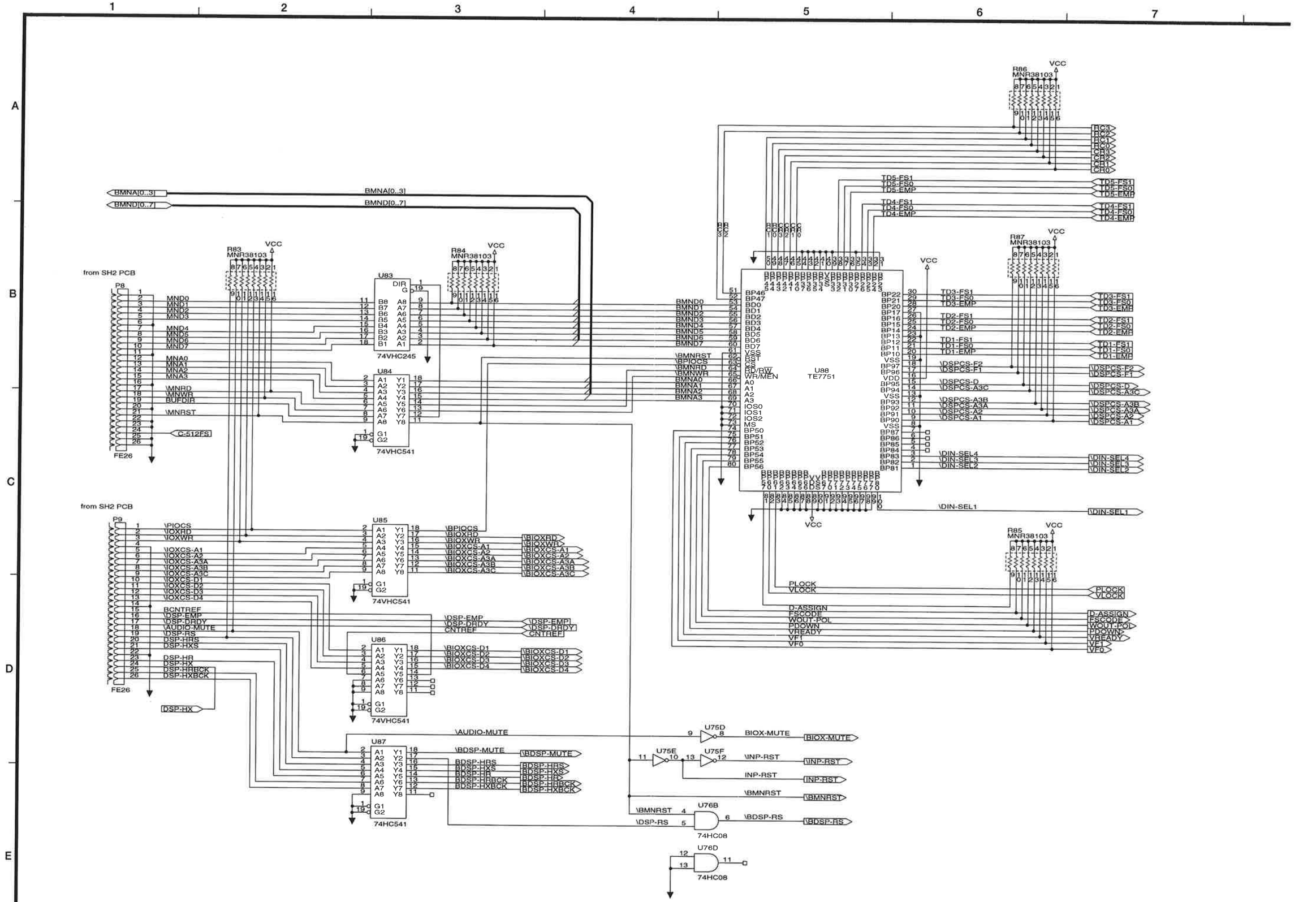
1
2
3
4
5
6
7
A
B
C
D
E
BMNA[0..3]
BMND[0..7]
from SH2 PCB
P8
FE26
MND0
MND1
MND2
MND3
MND4
MND5
MND6
MND7
MNA0
MNA1
MNA2
MNA3
\MNRD
\MNWR
BUFDIR
\MNRST
C:512FS
R83
MNR38103
R84
MNR38103
VCC
U83
74VHC245
U84
74VHC541
BMND0
BMND1
BMND2
BMND3
BMND4
BMND5
BMND6
BMND7
\BMNRST
\BPIOCS
CS
\BMNRD
\BMNWR
BMNA0
BMNA1
BMNA2
BMNA3
U88
TE7751
R86
MNR38103
R87
MNR38103
TD5-FS1
TD5-FS0
TD5-EMP
TD4-FS1
TD4-FS0
TD4-EMP
TD3-FS1
TD3-FS0
TD3-EMP
TD2-FS1
TD2-FS0
TD2-EMP
TD1-FS1
TD1-FS0
TD1-EMP
\DSPCS-F2
\DSPCS-F1
\DSPCS-D
\DSPCS-A3C
\DSPCS-A3B
\DSPCS-A3A
\DSPCS-A2
\DSPCS-A1
\DIN-SEL4
\DIN-SEL3
\DIN-SEL2
\DIN-SEL1
PLOCK
VLOCK
D-ASSIGN
FSCODE
WOUT-POL
PDOWN
VREADY
VF1
VF0
R85
MNR38103
from SH2 PCB
P9
FE26
\PIOCS
\IOXRD
\IOXWR
\IOXCS-A1
\IOXCS-A2
\IOXCS-A3A
\IOXCS-A3B
\IOXCS-A3C
\IOXCS-D1
\IOXCS-D2
\IOXCS-D3
\IOXCS-D4
BCNTREF
\DSP-EMP
\DSP-DRDY
\AUDIO-MUTE
\DSP-RS
DSP-HRS
DSP-HXS
DSP-HR
DSP-HX
DSP-HRBCK
DSP-HXBCK
U85
74VHC541
U86
74VHC541
U87
74HC541
\BIOXRD
\BIOXWR
\BIOXCS-A1
\BIOXCS-A2
\BIOXCS-A3A
\BIOXCS-A3B
\BIOXCS-A3C
\DSP-EMP
\DSP-DRDY
CNTREF
\BIOXCS-D1
\BIOXCS-D2
\BIOXCS-D3
\BIOXCS-D4
\AUDIO-MUTE
\BDSP-MUTE
BDSP-HRS
BDSP-HXS
BDSP-HR
BDSP-HX
BDSP-HRBCK
BDSP-HXBCK
U75D
U75E
U75F
BIOX-MUTE
\INP-RST
INP-RST
\BMNRST
U76B
74HC08
\BDSP-RS
U76D
74HC08

Digital Mixing Console **TM-D8000**

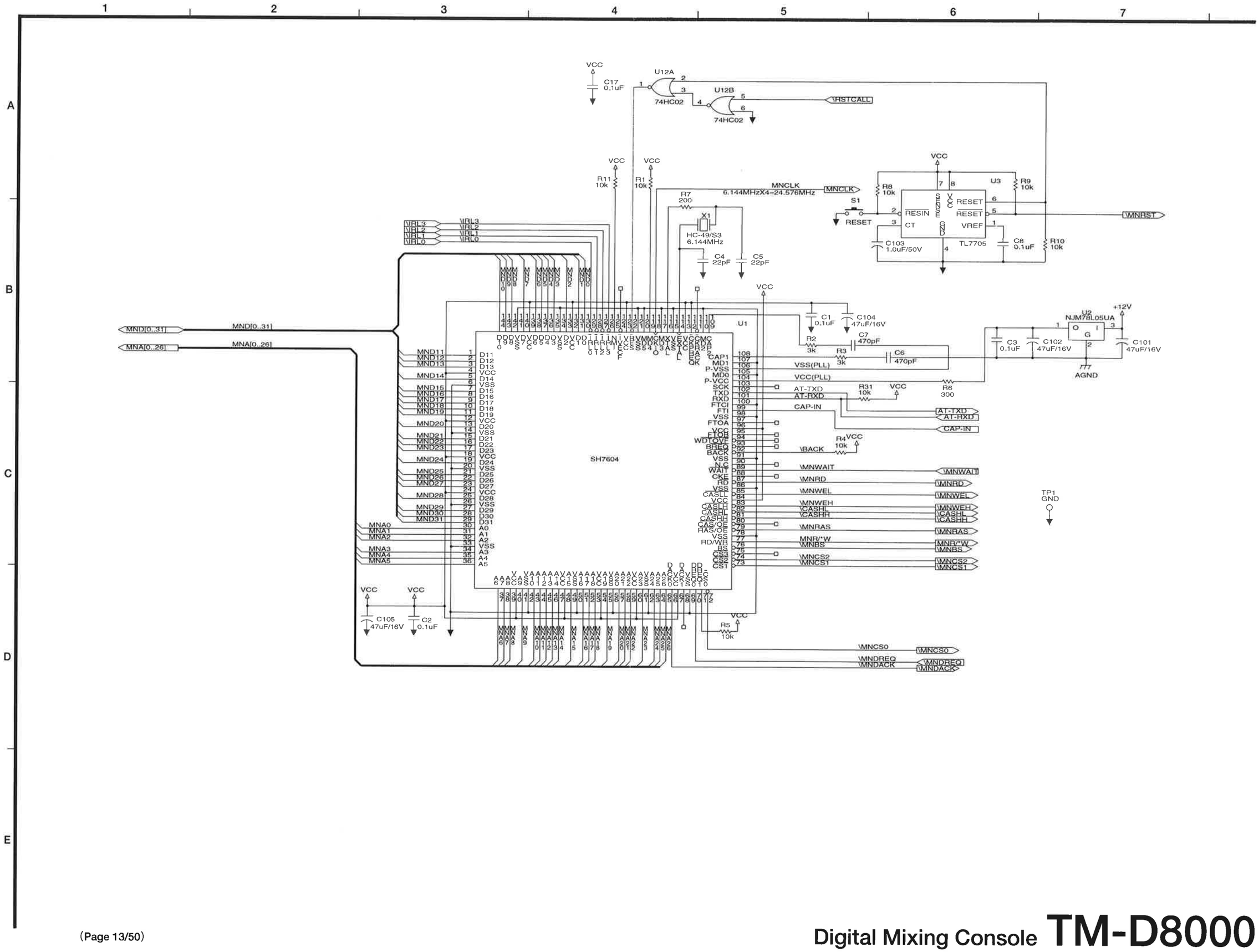
1
2
3
4
5
6
7
A
B
C
D
E
VCC
C17
0.1uF
U12A
U12B
74HC02
74HC02
\RSTCALL
R11
10k
R1
10k
MNCLK
6.144MHzX4=24.576MHz
MNCLK
R7
200
X1
HC-49/S3
6.144MHz
C4
22pF
C5
22pF
S1
RESET
R8
10k
U3
R9
10k
RESET
RESIN
CT
VREF
TL7705
C103
1.0uF/50V
C8
0.1uF
R10
10k
\MNRST
\IRL3
\IRL2
\IRL1
\IRL0
MND[0..31]
MNA[0..26]
U1
SH7604
C1
0.1uF
C104
47uF/16V
R2
3k
C7
470pF
R3
3k
C6
470pF
U2
NJM78L05UA
+12V
C3
0.1uF
C102
47uF/16V
C101
47uF/16V
AGND
VSS(PLL)
VCC(PLL)
R6
300
AT-TXD
AT-RXD
R31
10k
CAP-IN
R4
10k
\BACK
\MNWAIT
\MNRD
\MNWEL
\MNWEH
\CASHL
\CASHH
\MNRAS
MNR/*W
\MNBS
\MNCS2
\MNCS1
\MNCS0
\MNDREQ
\MNDACK
C105
47uF/16V
C2
0.1uF
R5
10k
TP1
GND

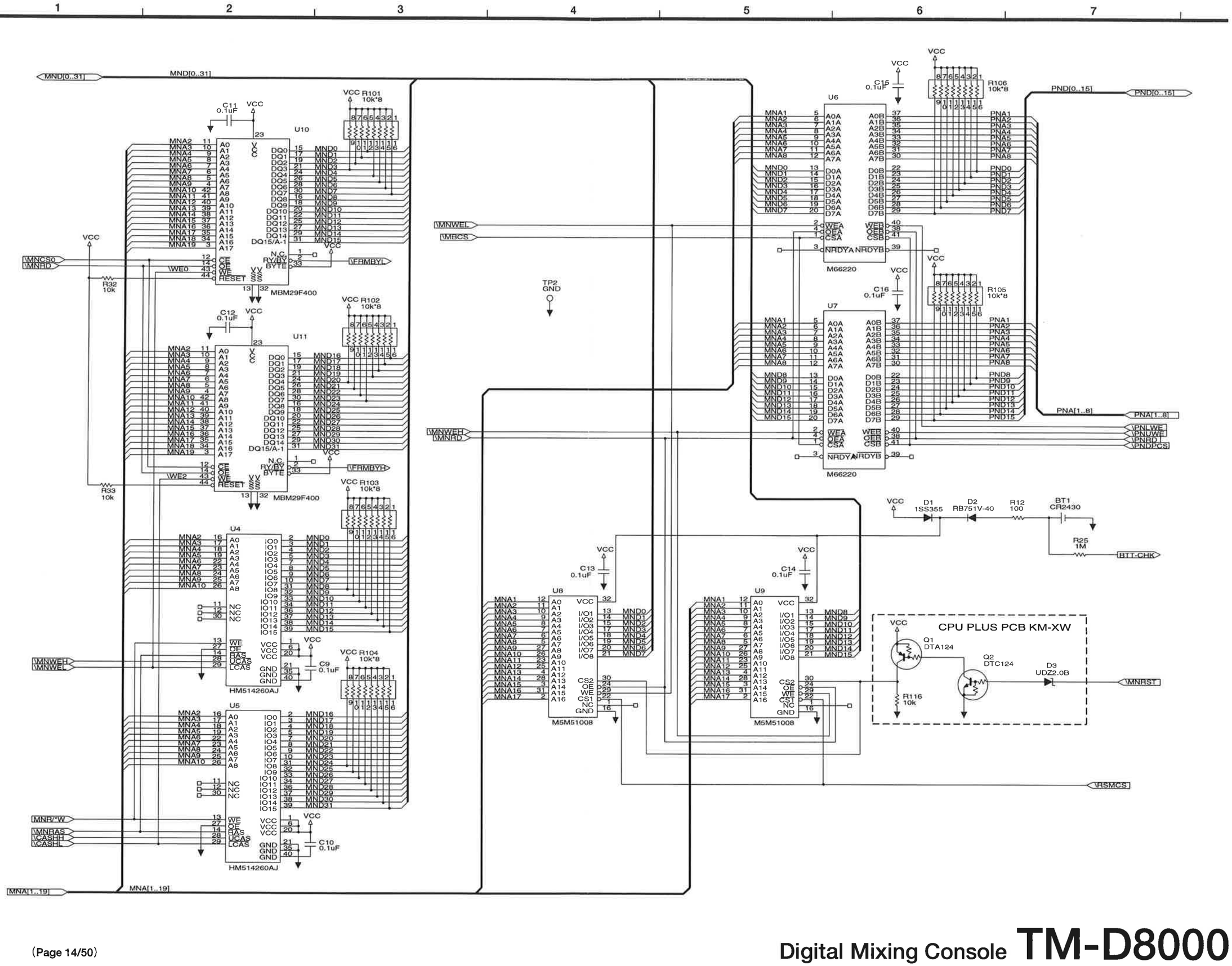
MND[0..31]
MNA[1..19]
U10
U11
U4
U5
U6
U7
U8
U9
MBM29F400
HM514260AJ
M66220
M5M51008
R101 10k*8
R102 10k*8
R103 10k*8
R104 10k*8
R105 10k*8
R106 10k*8
C11 0.1uF
C12 0.1uF
C13 0.1uF
C14 0.1uF
C15 0.1uF
C16 0.1uF
C9 0.1uF
C10 0.1uF
R32 10k
R33 10k
\MNCS0
\MNRD
\WE0
\WE2
\FRMBYL
\FRMBYH
\MNWEH
\MNWEL
\MNRWR
\MNRAS
\CASHH
\CASHL
\MBCS
\MNWEH
\MNRD
TP2
GND
PND[0..15]
PNA[1..8]
\PNLWE
\PNUWE
\PNRD
\PNDPCS
D1 1SS355
D2 RB751V-40
R12 100
BT1 CR2430
R25 1M
BTT-CHK
CPU PLUS PCB KM-XW
Q1 DTA124
Q2 DTC124
D3 UDZ2.0B
R116 10k
\MNRST
\RSMCS

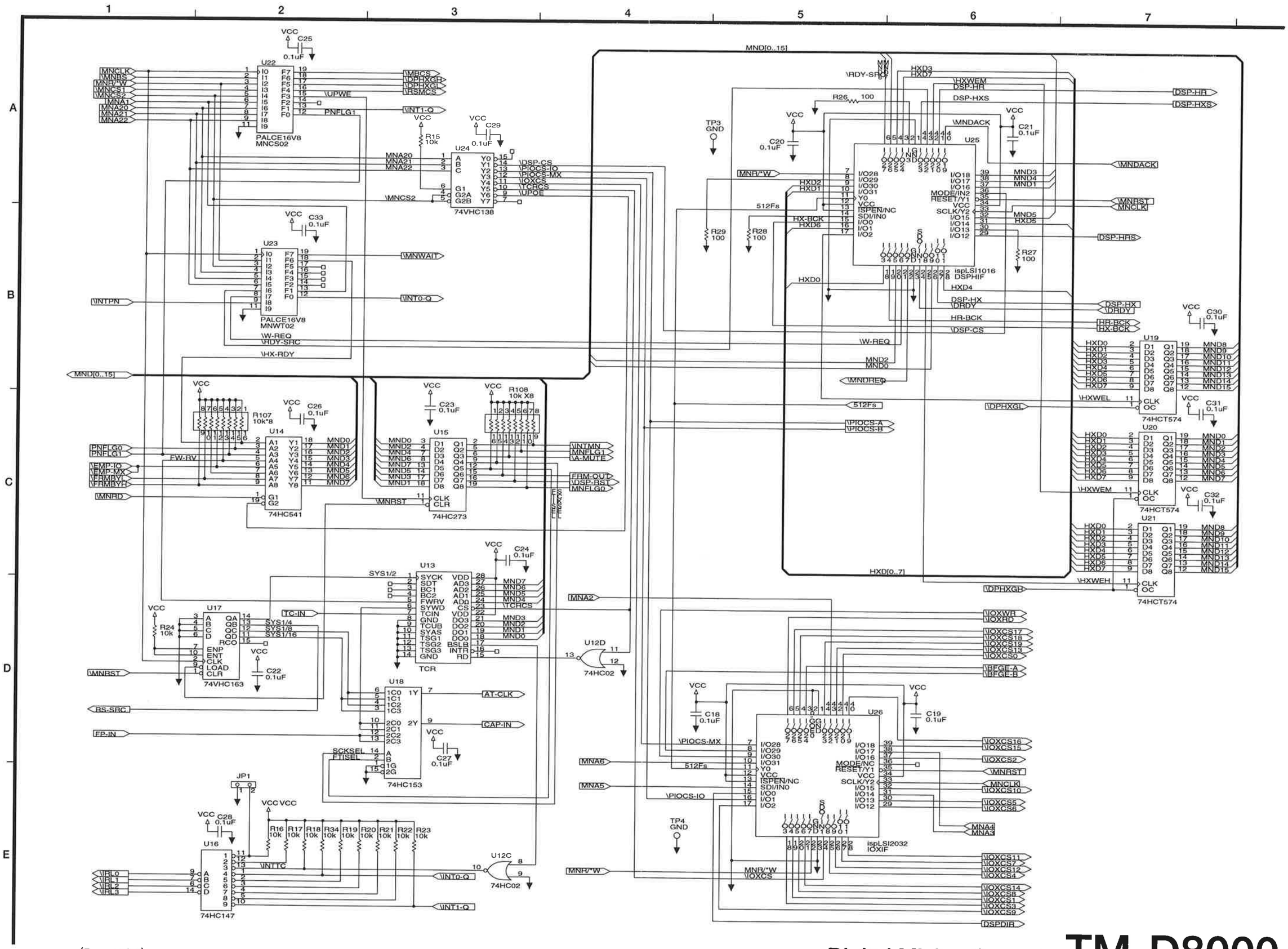
1
2
3
4
5
6
7
A
B
C
D
E
U22
PALCE16V8
MNCS02
U23
PALCE16V8
MNWT02
U24
74VHC138
U14
74HC541
U15
74HC273
U13
TCR
U17
74VHC163
U18
74HC153
U16
74HC147
U12D
74HC02
U12C
74HC02
U25
ispLSI1016
DSPHIF
U26
ispLSI2032
IOXIF
U19
74HCT574
U20
74HCT574
U21
74HCT574
MND[0..15]
HXD[0..7]
VCC
C25 0.1uF
C29 0.1uF
C33 0.1uF
C26 0.1uF
C23 0.1uF
C24 0.1uF
C22 0.1uF
C27 0.1uF
C28 0.1uF
C20 0.1uF
C21 0.1uF
C18 0.1uF
C19 0.1uF
C30 0.1uF
C31 0.1uF
C32 0.1uF
R15 10k
R24 10k
R107 10k*8
R108 10k X8
R16 10k
R17 10k
R18 10k
R34 10k
R19 10k
R20 10k
R21 10k
R22 10k
R23 10k
R26 100
R27 100
R28 100
R29 100
JP1
TP3 GND
TP4 GND
MNCLK
\MNRS
\MNR/*W
\MNCS1
\MNCS2
!MNA1
MNA20
MNA21
MNA22
PNFLG1
\MBCS
\DPHXGH
\DPHXGL
\HSMCS
\UPWE
\INT1-Q
\MNWAIT
\INTPN
\INT0-Q
\W-REQ
\RDY-SRC
\HX-RDY
PNFLG0
FW-RV
\EMP-IO
\EMP-MX
\FRMBYI
\FRMBYH
\MNRD
\MNRST
\INTMN
MNFLG1
\A-MUTE
FRM-OUT
\DSP-RST
MNFLG0
\INTTC
SYS1/2
SYS1/4
SYS1/8
SYS1/16
TC-IN
\MNRST
BS-SRC
FP-IN
SCKSEL
FTISEL
AT-CLK
CAP-IN
\IRL0
\IRL1
\IRL2
\IRL3
\INT0-Q
\INT1-Q
\RDY-SRC
HXD3
HXD7
\HXWEM
DSP-HR
DSP-HXS
\MNDACK
\MNRST
MNCLK
DSP-HRS
HXD2
HXD1
HXD0
HXD4
DSP-HX
\DRDY
HR-BCK
HX-BCK
\DSP-CS
MND3
MND4
MND1
MND5
HXD5
MND2
MND0
\MNDREQ
512Fs
\PIOCS-A
\PIOCS-B
\DPHXGL
\HXWEL
\HXWEH
\DPHXGH
\IOXWR
\IOXRD
\IOXCS17
\IOXCS18
\IOXCS19
\IOXCS13
\IOXCS0
\BFGE-A
\BFGE-B
\IOXCS16
\IOXCS15
\IOXCS2
\MNRST
MNCLK
\IOXCS10
\IOXCS5
\IOXCS6
MNA4
MNA3
\IOXCS11
\IOXCS7
\IOXCS12
\IOXCS4
\IOXCS14
\IOXCS8
\IOXCS1
\IOXCS3
\IOXCS9
DSPDIR
MNA2
MNA6
MNA5
\PIOCS-IO
\PIOCS-MX
MNR/*W
\IOXCS
\DSP-CS
\PIOCS-IO
\PIOCS-MX
\IOXCS
\TCRCS
\UPOE
HX-BCK
HXD6

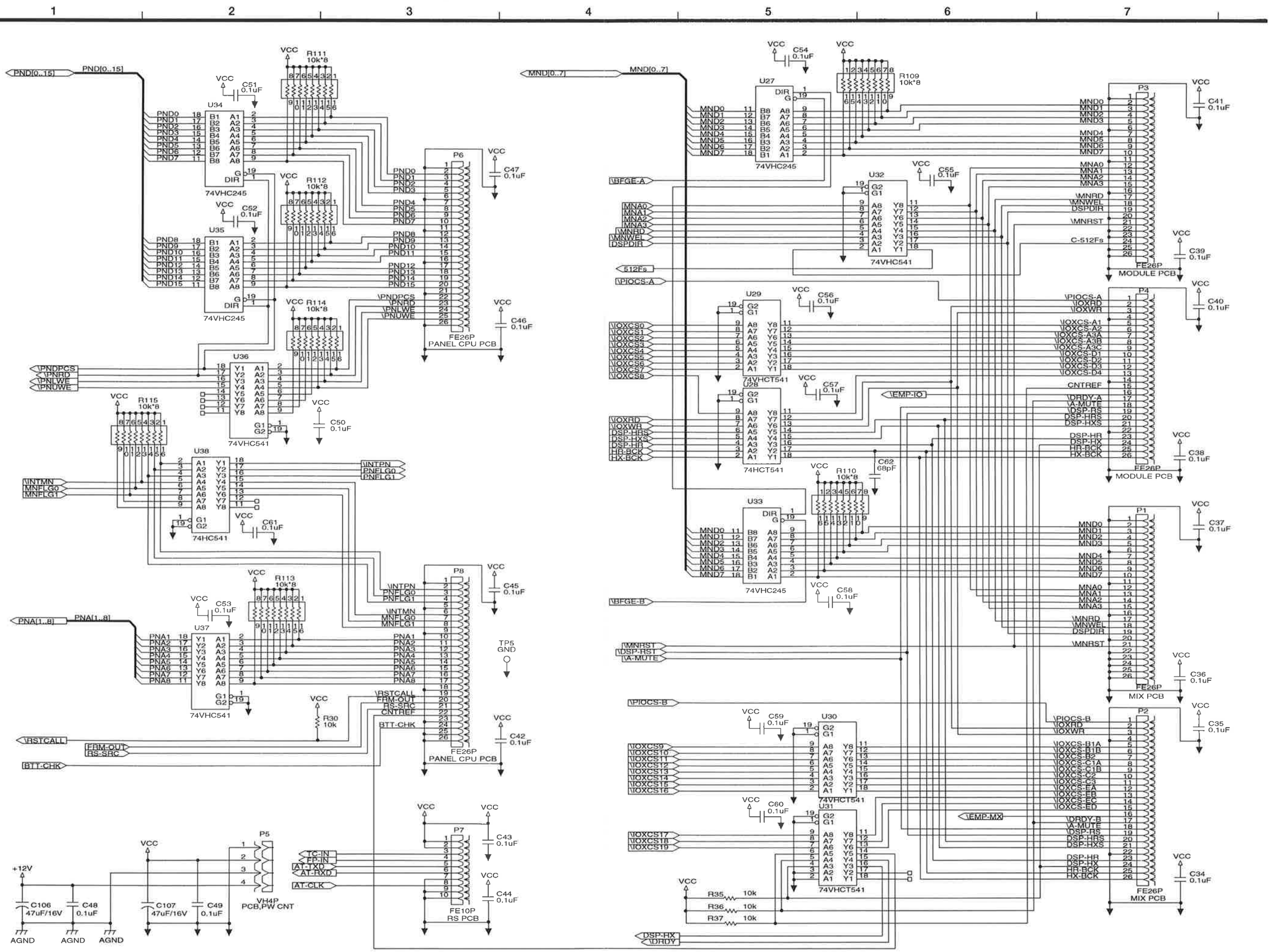
1
2
3
4
5
6
7
A
B
C
D
E
PND[0..15]
MND[0..7]
PNA[1..8]
U34
U35
U36
U37
U38
U27
U28
U29
U30
U31
U32
U33
74VHC245
74VHC541
74HCT541
R111 10k*8
R112 10k*8
R113 10k*8
R114 10k*8
R115 10k*8
R109 10k*8
R110 10k*8
C51 0.1uF
C52 0.1uF
C53 0.1uF
C54 0.1uF
C55 0.1uF
C56 0.1uF
C57 0.1uF
C58 0.1uF
C59 0.1uF
C60 0.1uF
C61 0.1uF
C62 68pF
C50 0.1uF
C45 0.1uF
C46 0.1uF
C47 0.1uF
C42 0.1uF
C43 0.1uF
C44 0.1uF
C41 0.1uF
C40 0.1uF
C39 0.1uF
C38 0.1uF
C37 0.1uF
C36 0.1uF
C35 0.1uF
C34 0.1uF
P6
P8
P7
P5
P3
P4
P1
P2
FE26P PANEL CPU PCB
FE10P RS PCB
FE26P MODULE PCB
FE26P MIX PCB
VH4P PCB,PW CNT
\PNDPCS
\PNRD
\PNLWE
\PNUWE
\INTMN
MNFLG0
MNFLG1
\INTPN
PNFLG0
PNFLG1
\BFGE-A
\BFGE-B
MNA0
MNA1
MNA2
MNA3
\MNRD
\MNWEL
DSPDIR
\MNRST
512Fs
\PIOCS-A
\PIOCS-B
\IOXCS0
\IOXCS1
\IOXCS2
\IOXCS3
\IOXCS4
\IOXCS5
\IOXCS6
\IOXCS7
\IOXCS8
\IOXCS9
\IOXCS10
\IOXCS11
\IOXCS12
\IOXCS13
\IOXCS14
\IOXCS15
\IOXCS16
\IOXCS17
\IOXCS18
\IOXCS19
\IOXRD
\IOXWR
DSP-HRS
DSP-HXS
DSP-HR
HR-BCK
HX-BCK
\EMP-IO
\EMP-MX
C-512Fs
CNTREF
\DRDY-A
\A-MUTE
\DSP-RST
DSP-HX
\DRDY
\RSTCALL
FRM-OUT
RS-SRC
CNTREF
BTT-CHK
TC-IN
FP-IN
AT-TXD
AT-RXD
AT-CLK
TP5 GND
R30 10k
R35 10k
R36 10k
R37 10k
+12V
AGND
C106 47uF/16V
C48 0.1uF
C107 47uF/16V
C49 0.1uF
VCC

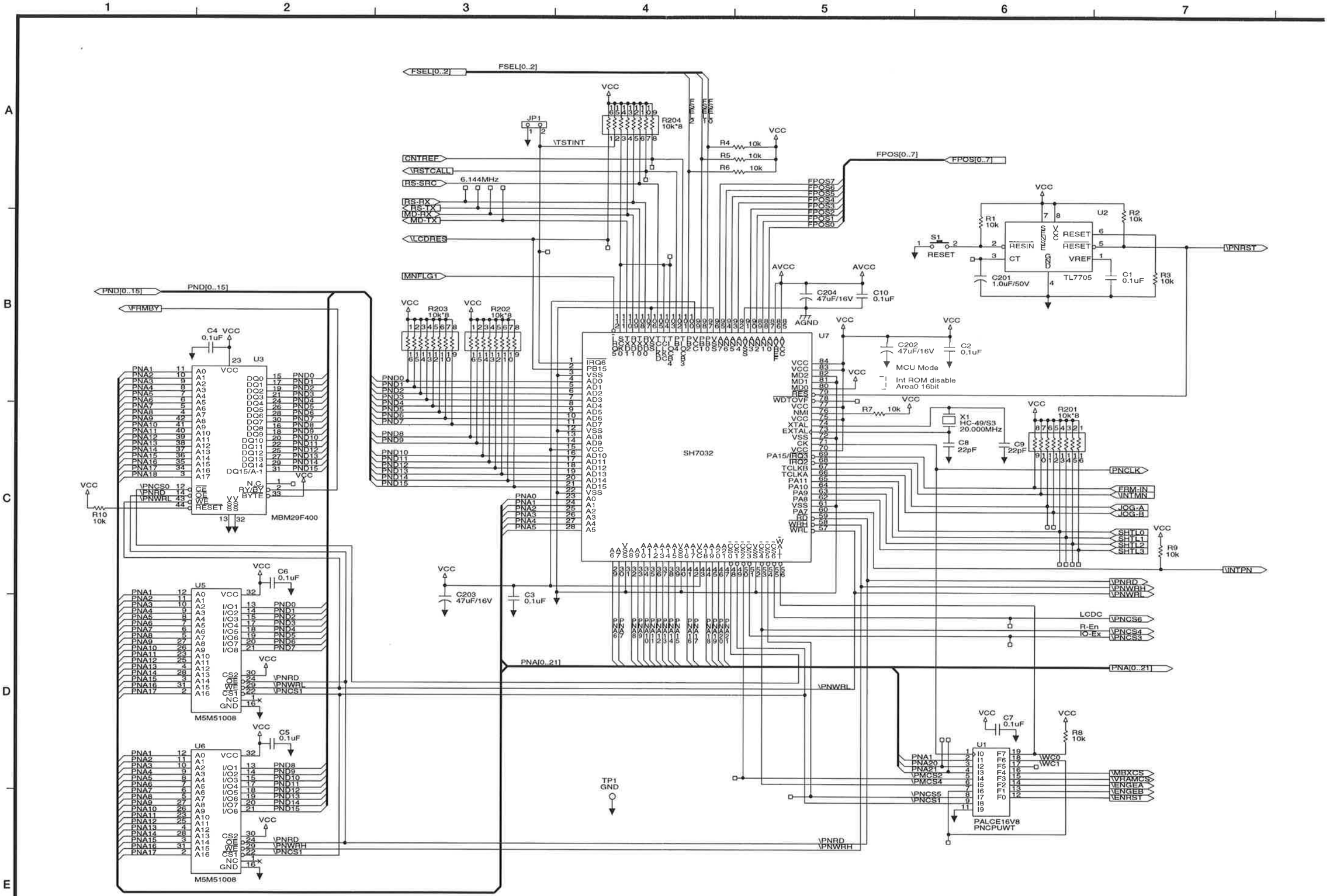
FSEL[0..2]
VCC
R204 10k*8
JP1
\TSTINT
R4 10k
R5 10k
R6 10k
CNTREF
\RSTCALL
RS-SRC
6.144MHz
RS-RX
RS-TX
MD-RX
MD-TX
\LCDRES
MNFLG1
FPOS[0..7]
FPOS7
FPOS6
FPOS5
FPOS4
FPOS3
FPOS2
FPOS1
FPOS0
AVCC
C204 47uF/16V
C10 0.1uF
AGND
U7
C202 47uF/16V
C2 0.1uF
MCU Mode
Int ROM disable
Area0 16bit
R7 10k
X1 HC-49/S3 20.000MHz
C8 22pF
C9 22pF
R201 10k*8
PNCLK
FRM-IN
\INTMN
JOG-A
JOG-B
SHTL0
SHTL1
SHTL2
SHTL3
R9 10k
\INTPN
SH7032
U2
R1 10k
R2 10k
S1
RESET
RESIN
CT
RESET
VREF
TL7705
C201 1.0uF/50V
C1 0.1uF
R3 10k
\PNRST
PND[0..15]
\FRMBY
C4 0.1uF
U3
MBM29F400
\PNCS0
\PNRD
\PNWRL
R10 10k
R203 10k*8
R202 10k*8
C6 0.1uF
U5
M5M51008
C5 0.1uF
U6
M5M51008
C203 47uF/16V
C3 0.1uF
PNA[0..21]
\PNWRL
\PNRD
\PNWRH
LCDC
\PNCS6
R-En
IO-Ex
\PNCS4
\PNCS3
C7 0.1uF
R8 10k
U1
PALCE16V8
PNCPUWT
WC0
WC1
\MBXCS
\VRAMCS
\ENGEA
\ENGEB
\ENRST
TP1
GND

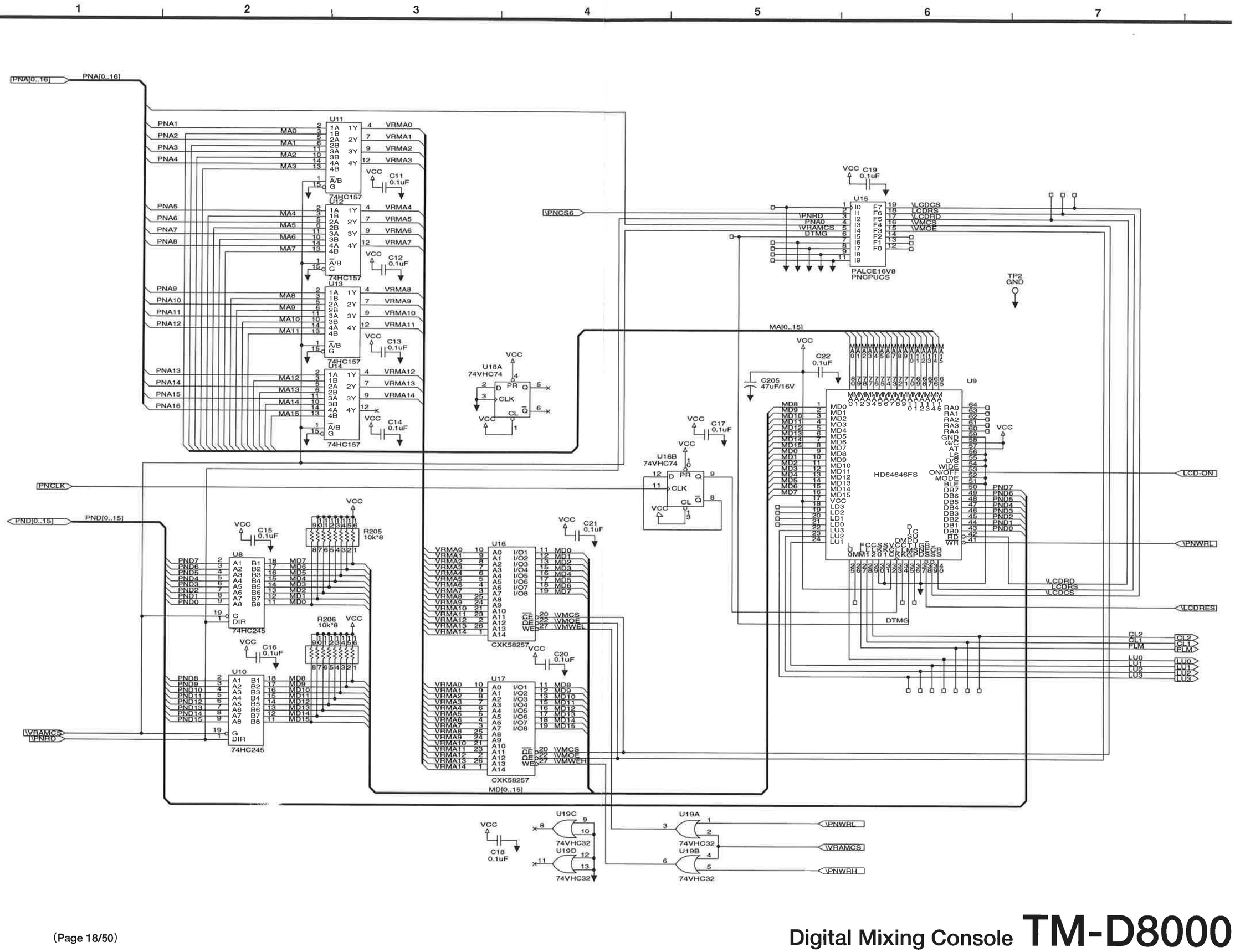
1
2
3
4
5
6
7
A
B
C
D
E
PNA[0..16]
PNA[0..16]
U11
U12
U13
U14
74HC157
PNA1
PNA2
PNA3
PNA4
PNA5
PNA6
PNA7
PNA8
PNA9
PNA10
PNA11
PNA12
PNA13
PNA14
PNA15
PNA16
MA0
MA1
MA2
MA3
MA4
MA5
MA6
MA7
MA8
MA9
MA10
MA11
MA12
MA13
MA14
MA15
VRMA0
VRMA1
VRMA2
VRMA3
VRMA4
VRMA5
VRMA6
VRMA7
VRMA8
VRMA9
VRMA10
VRMA11
VRMA12
VRMA13
VRMA14
VCC
C11 0.1uF
C12 0.1uF
C13 0.1uF
C14 0.1uF
\PNCS6
U15
PALCE16V8
PNCPUCS
\PNRD
PNA0
\VHAMCS
DTMG
\LCDCS
\LCDRS
\LCDRD
\VMCS
\VMOE
\VMWE
C19 0.1uF
TP2
GND
MA[0..15]
C22 0.1uF
C205 47uF/16V
U9
HD64646FS
LCD-ON
\PNWRL
\LCDRD
\LCDRS
\LCDCS
\LCDRES
CL2
CL1
FLM
LU0
LU1
LU2
LU3
U18A
74VHC74
U18B
74VHC74
C17 0.1uF
C21 0.1uF
C20 0.1uF
PNCLK
PND[0..15]
PND[0..15]
U8
U10
74HC245
R205 10k*8
R206 10k*8
C15 0.1uF
C16 0.1uF
PND7
PND6
PND5
PND4
PND3
PND2
PND1
PND0
PND8
PND9
PND10
PND11
PND12
PND13
PND14
PND15
MD7
MD6
MD5
MD4
MD3
MD2
MD1
MD0
MD8
MD9
MD10
MD11
MD12
MD13
MD14
MD15
\VHAMCS
\PNRD
U16
U17
CXK58257
\VMCS
\VMOE
\VMWEL
\VMWEH
MD[0..15]
U19C
U19D
U19A
U19B
74VHC32
C18 0.1uF
\PNWRL
\VHAMCS
\PNWRH

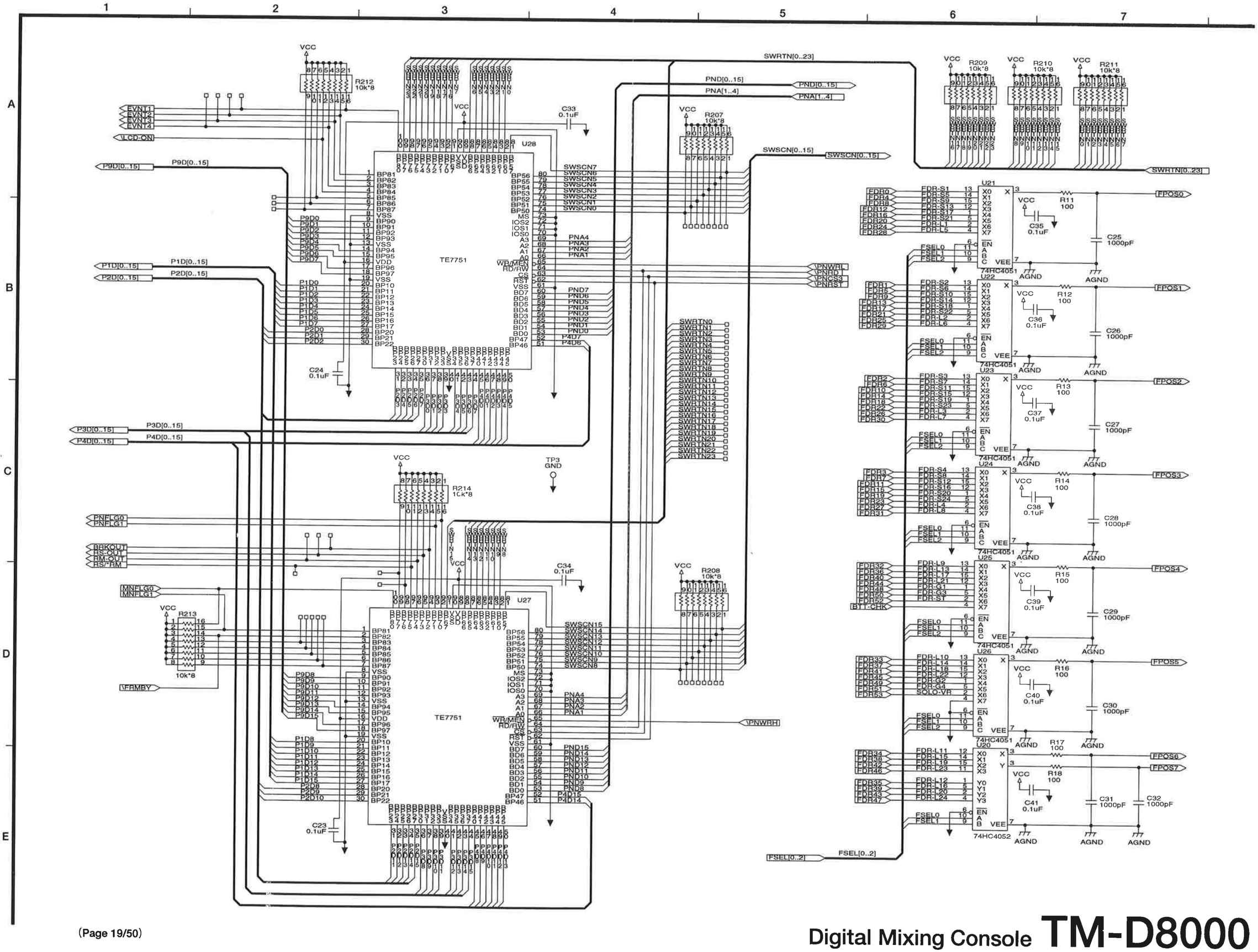
1
2
3
4
5
6
7
A
B
C
D
E
VCC
R212
10k*8
EVNT1
EVNT2
EVNT3
EVNT4
\LCD-ON
P9D[0..15]
P1D[0..15]
P2D[0..15]
P3D[0..15]
P4D[0..15]
C33
0.1uF
C24
0.1uF
U28
TE7751
SWSCN7
SWSCN6
SWSCN5
SWSCN4
SWSCN3
SWSCN2
SWSCN1
SWSCN0
PNA4
PNA3
PNA2
PNA1
PND7
PND6
PND5
PND4
PND3
PND2
PND1
PND0
P4D7
P4D6
SWRTN[0..23]
PND[0..15]
PNA[1..4]
SWSCN[0..15]
\PNWRL
\PNRD
\PNCS3
\PNRST
R207
10k*8
R209
10k*8
R210
10k*8
R211
10k*8
TP3
GND
R214
1Ck*8
PNFLG0
PNFLG1
BRKOUT
RS-OUT
RM-OUT
RS7-RM
MNFLG0
MNFLG1
R213
10k*8
\FRMBY
C34
0.1uF
C23
0.1uF
U27
SWSCN15
SWSCN14
SWSCN13
SWSCN12
SWSCN11
SWSCN10
SWSCN9
SWSCN8
P9D8
P9D9
P9D10
P9D11
P9D12
P9D13
P9D14
P9D15
P1D8
P1D9
P1D10
P1D11
P1D12
P1D13
P1D14
P1D15
P2D8
P2D9
P2D10
PND15
PND14
PND13
PND12
PND11
PND10
PND9
PND8
P4D15
P4D14
\PNWRH
R208
10k*8
U21
U22
U23
U24
U25
U26
U20
74HC4051
74HC4052
FDR-S1
FDR-S5
FDR-S9
FDR-S13
FDR-S17
FDR-S21
FDR-L1
FDR-L5
FDR-S2
FDR-S6
FDR-S10
FDR-S14
FDR-S18
FDR-S22
FDR-L2
FDR-L6
FDR-S3
FDR-S7
FDR-S11
FDR-S15
FDR-S19
FDR-S23
FDR-L3
FDR-L7
FDR-S4
FDR-S8
FDR-S12
FDR-S16
FDR-S20
FDR-S24
FDR-L4
FDR-L8
FDR-L9
FDR-L13
FDR-L17
FDR-L21
FDR-G1
FDR-G3
FDR-ST
FDR-L10
FDR-L14
FDR-L18
FDR-L22
FDR-G2
FDR-G4
SOLO-VR
FDR-L11
FDR-L15
FDR-L19
FDR-L23
FDR-L12
FDR-L16
FDR-L20
FDR-L24
FSEL0
FSEL1
FSEL2
VEE
AGND
R11
100
R12
100
R13
100
R14
100
R15
100
R16
100
R17
100
R18
100
C35
0.1uF
C36
0.1uF
C37
0.1uF
C38
0.1uF
C39
0.1uF
C40
0.1uF
C41
0.1uF
C25
1000pF
C26
1000pF
C27
1000pF
C28
1000pF
C29
1000pF
C30
1000pF
C31
1000pF
C32
1000pF
FPOS0
FPOS1
FPOS2
FPOS3
FPOS4
FPOS5
FPOS6
FPOS7
FSEL[0..2]

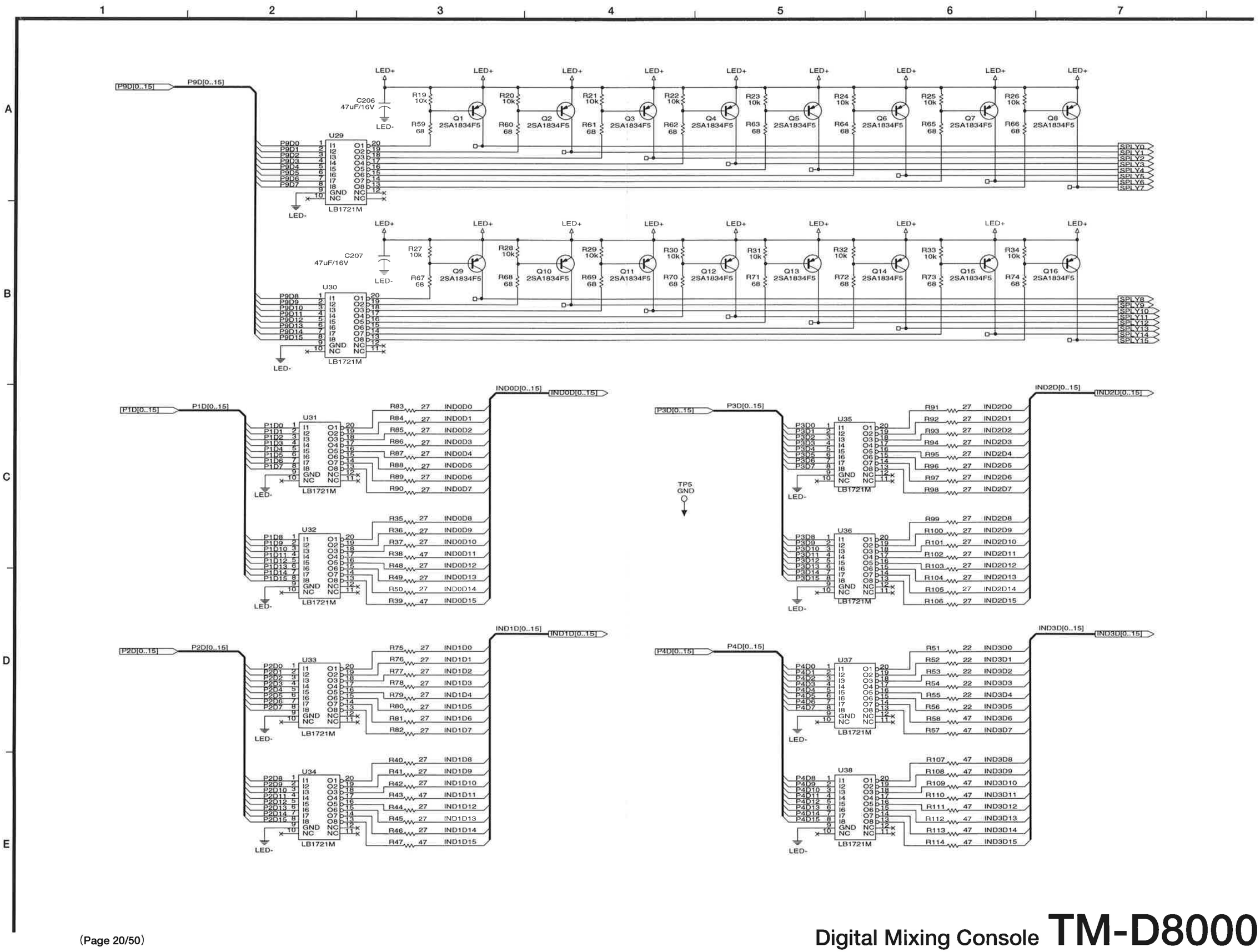
1
2
3
4
5
6
7
A
B
C
D
E
P9D[0..15]
C206
47uF/16V
C207
47uF/16V
LED+
LED-
U29
U30
LB1721M
Q1 2SA1834F5
Q2 2SA1834F5
Q3 2SA1834F5
Q4 2SA1834F5
Q5 2SA1834F5
Q6 2SA1834F5
Q7 2SA1834F5
Q8 2SA1834F5
Q9 2SA1834F5
Q10 2SA1834F5
Q11 2SA1834F5
Q12 2SA1834F5
Q13 2SA1834F5
Q14 2SA1834F5
Q15 2SA1834F5
Q16 2SA1834F5
SPLY0
SPLY1
SPLY2
SPLY3
SPLY4
SPLY5
SPLY6
SPLY7
SPLY8
SPLY9
SPLY10
SPLY11
SPLY12
SPLY13
SPLY14
SPLY15
P1D[0..15]
U31
U32
IND0D[0..15]
P2D[0..15]
U33
U34
IND1D[0..15]
P3D[0..15]
U35
U36
IND2D[0..15]
TP5
GND
P4D[0..15]
U37
U38
IND3D[0..15]

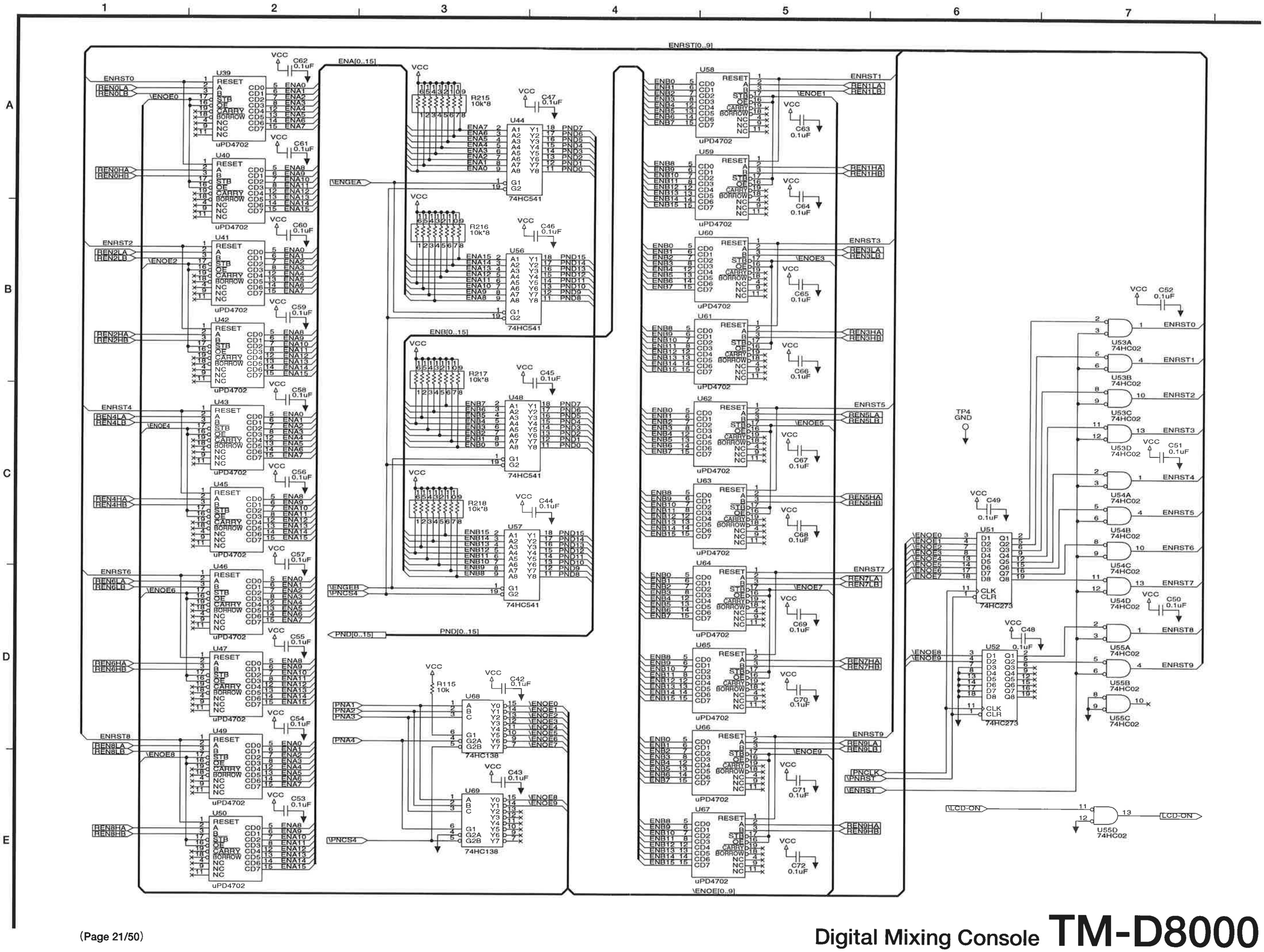
1
2
3
4
5
6
7
A
B
C
D
E
ENRST[0..9]
ENA[0..15]
ENB[0..15]
PND[0..15]
\ENOE[0..9]
U39
U40
U41
U42
U43
U45
U46
U47
U49
U50
U58
U59
U60
U61
U62
U63
U64
U65
U66
U67
uPD4702
U44
U56
U48
U57
74HC541
R215 10k*8
R216 10k*8
R217 10k*8
R218 10k*8
U68
U69
74HC138
R115 10k
C62 0.1uF
C61 0.1uF
C60 0.1uF
C59 0.1uF
C58 0.1uF
C56 0.1uF
C57 0.1uF
C55 0.1uF
C54 0.1uF
C53 0.1uF
C47 0.1uF
C46 0.1uF
C45 0.1uF
C44 0.1uF
C42 0.1uF
C43 0.1uF
C63 0.1uF
C64 0.1uF
C65 0.1uF
C66 0.1uF
C67 0.1uF
C68 0.1uF
C69 0.1uF
C70 0.1uF
C71 0.1uF
C72 0.1uF
C52 0.1uF
C51 0.1uF
C50 0.1uF
C49 0.1uF
C48 0.1uF
U53A 74HC02
U53B 74HC02
U53C 74HC02
U53D 74HC02
U54A 74HC02
U54B 74HC02
U54C 74HC02
U54D 74HC02
U55A 74HC02
U55B 74HC02
U55C 74HC02
U55D 74HC02
U51
U52
74HC273
TP4
GND
ENRST0
ENRST1
ENRST2
ENRST3
ENRST4
ENRST5
ENRST6
ENRST7
ENRST8
ENRST9
REN0LA
REN0LB
REN0HA
REN0HB
REN1LA
REN1LB
REN1HA
REN1HB
REN2LA
REN2LB
REN2HA
REN2HB
REN3LA
REN3LB
REN3HA
REN3HB
REN4LA
REN4LB
REN4HA
REN4HB
REN5LA
REN5LB
REN5HA
REN5HB
REN6LA
REN6LB
REN6HA
REN6HB
REN7LA
REN7LB
REN7HA
REN7HB
REN8LA
REN8LB
REN8HA
REN8HB
REN9LA
REN9LB
REN9HA
REN9HB
\ENOE0
\ENOE1
\ENOE2
\ENOE3
\ENOE4
\ENOE5
\ENOE6
\ENOE7
\ENOE8
\ENOE9
\ENGEA
\ENGEB
\PNCS4
PNA1
PNA2
PNA3
PNA4
[PNCLK
\PNRST
\ENRST
\LCD-ON
LCD-ON
VCC
GND

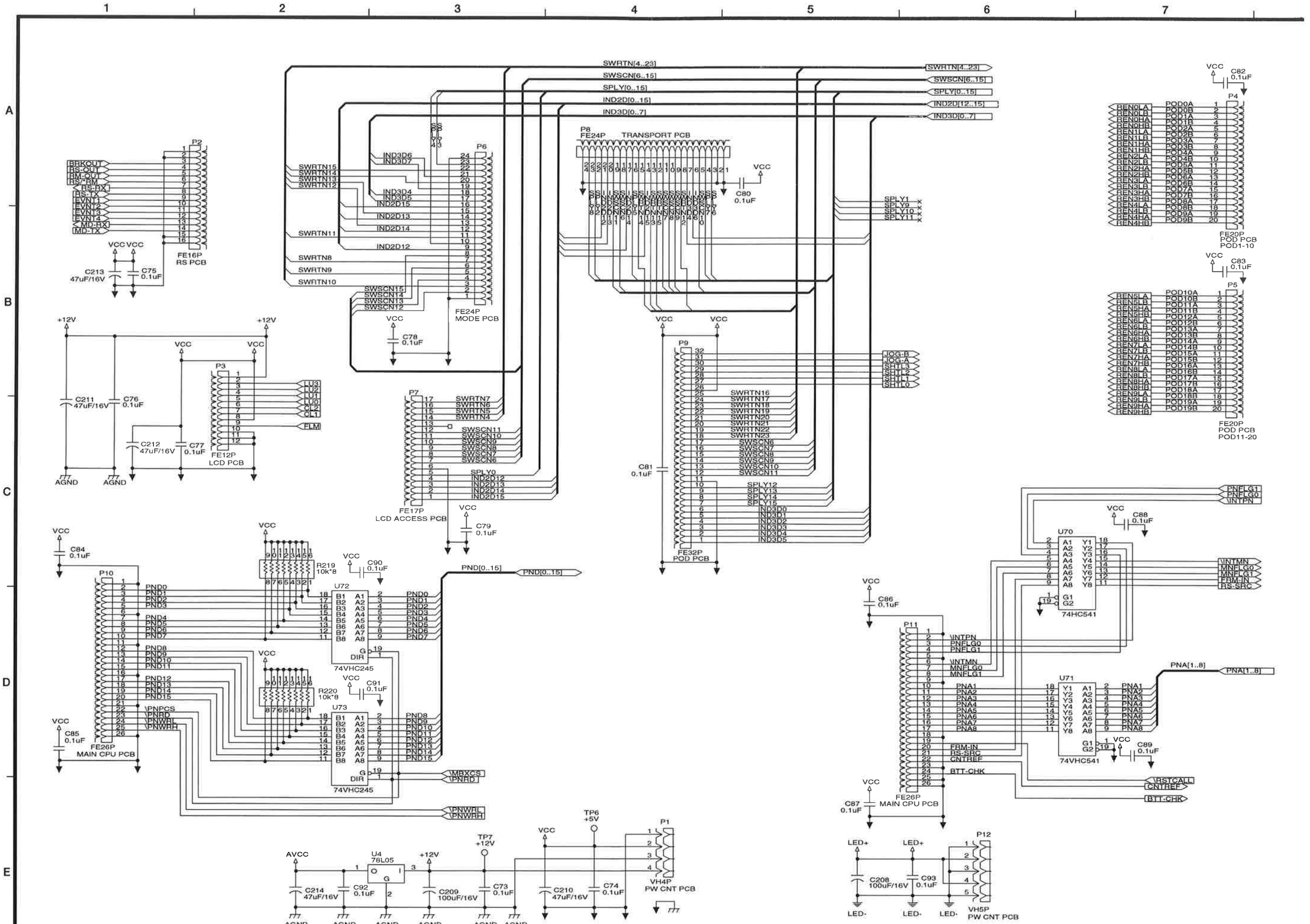
1
2
3
4
5
6
7
A
B
C
D
E
SWRTN[4..23]
SWSCN[6..15]
SPLY[0..15]
IND2D[0..15]
IND3D[0..7]
[SWRTN[4..23]
SWSCN[6..15]
SPLY[0..15]
IND2D[12..15]
IND3D[0..7]
P2
BRKOUT
RS-OUT
RM-OUT
RS/~RM
RS-RX
RS-TX
EVNT1
EVNT2
EVNT3
EVNT4
MD-RX
MD-TX
FE16P
RS PCB
C213
47uF/16V
C75
0.1uF
VCC
P6
SWRTN15
SWRTN14
SWRTN13
SWRTN12
SWRTN11
SWRTN8
SWRTN9
SWRTN10
SWSCN15
SWSCN14
SWSCN13
SWSCN12
IND3D6
IND3D7
IND3D4
IND3D5
IND2D15
IND2D13
IND2D14
IND2D12
FE24P
MODE PCB
C78
0.1uF
P8
FE24P
TRANSPORT PCB
C80
0.1uF
SPLY1
SPLY9
SPLY10
SPLY11
C82
0.1uF
P4
REN0LA
REN0LB
REN0HA
REN0HB
REN1LA
REN1LB
REN1HA
REN1HB
REN2LA
REN2LB
REN2HA
REN2HB
REN3LA
REN3LB
REN3HA
REN3HB
REN4LA
REN4LB
REN4HA
REN4HB
POD0A
POD0B
POD1A
POD1B
POD2A
POD2B
POD3A
POD3B
POD4A
POD4B
POD5A
POD5B
POD6A
POD6B
POD7A
POD7B
POD8A
POD8B
POD9A
POD9B
FE20P
POD PCB
POD1-10
C83
0.1uF
P5
REN5LA
REN5LB
REN5HA
REN5HB
REN6LA
REN6LB
REN6HA
REN6HB
REN7LA
REN7LB
REN7HA
REN7HB
REN8LA
REN8LB
REN8HA
REN8HB
REN9LA
REN9LB
REN9HA
REN9HB
POD10A
POD10B
POD11A
POD11B
POD12A
POD12B
POD13A
POD13B
POD14A
POD14B
POD15A
POD15B
POD16A
POD16B
POD17A
POD17B
POD18A
POD18B
POD19A
POD19B
FE20P
POD PCB
POD11-20
+12V
P3
LU3
LU2
LU1
LU0
CL2
CL1
FLM
C211
47uF/16V
C76
0.1uF
C212
47uF/16V
C77
0.1uF
FE12P
LCD PCB
AGND
P7
SWRTN7
SWRTN6
SWRTN5
SWRTN4
SWSCN11
SWSCN10
SWSCN9
SWSCN8
SWSCN7
SWSCN6
SPLY0
IND2D12
IND2D13
IND2D14
IND2D15
FE17P
LCD ACCESS PCB
C79
0.1uF
P9
JOG-B
JOG-A
SHTL3
SHTL2
SHTL1
SHTL0
SWRTN16
SWRTN17
SWRTN18
SWRTN19
SWRTN20
SWRTN21
SWRTN22
SWRTN23
SWSCN6
SWSCN7
SWSCN8
SWSCN9
SWSCN10
SWSCN11
SPLY12
SPLY13
SPLY14
SPLY15
IND3D0
IND3D1
IND3D2
IND3D3
IND3D4
IND3D5
FE32P
POD PCB
C81
0.1uF
C84
0.1uF
P10
PND0
PND1
PND2
PND3
PND4
PND5
PND6
PND7
PND8
PND9
PND10
PND11
PND12
PND13
PND14
PND15
\PNPCS
\PNRD
\PNWRL
\PNWRH
FE26P
MAIN CPU PCB
C85
0.1uF
R219
10k*8
R220
10k*8
C90
0.1uF
C91
0.1uF
U72
U73
74VHC245
DIR
G
PND[0..15]
PND[0..15]
\MBXCS
\PNRD
\PNWRL
\PNWRH
U4
78L05
AVCC
C214
47uF/16V
C92
0.1uF
C209
100uF/16V
C73
0.1uF
C210
47uF/16V
C74
0.1uF
TP7
+12V
TP6
+5V
P1
VH4P
PW CNT PCB
PNFLG1
PNFLG0
\INTPN
C88
0.1uF
U70
74HC541
\INTMN
MNFLG0
MNFLG1
FRM-IN
RS-SRC
C86
0.1uF
P11
\INTPN
PNFLG0
PNFLG1
\INTMN
MNFLG0
MNFLG1
PNA1
PNA2
PNA3
PNA4
PNA5
PNA6
PNA7
PNA8
FRM-IN
RS-SRC
CNTHEF
BTT-CHK
FE26P
MAIN CPU PCB
C87
0.1uF
U71
74VHC541
PNA[1..8]
PNA[1..8]
C89
0.1uF
\RSTCALL
CNTHEF
BTT-CHK
LED+
LED-
C208
100uF/16V
C93
0.1uF
P12
VH5P
PW CNT PCB

SCHEMATIC DIAGRAM TM-D8000 PANEL CPU PCB (7/7)

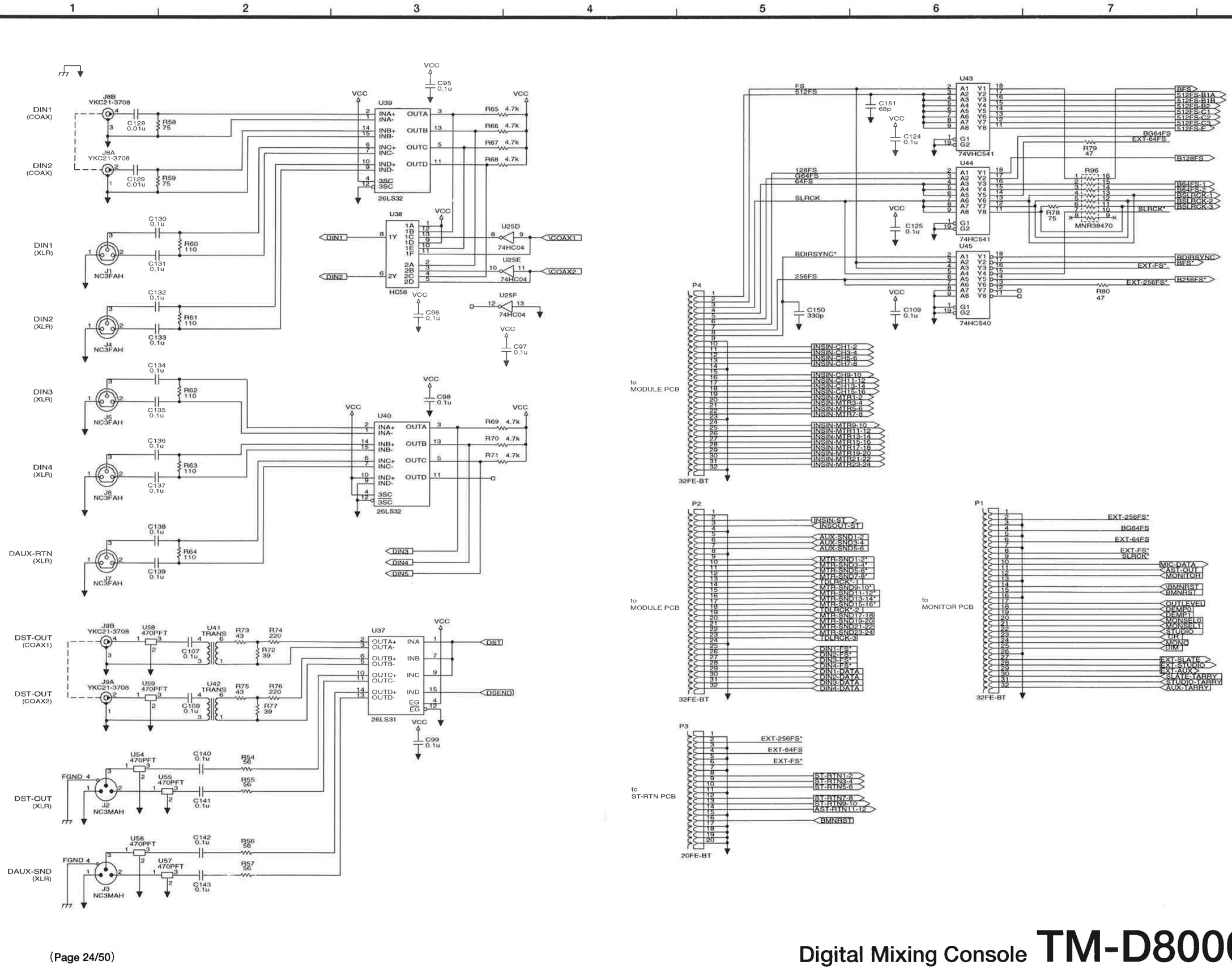
1
2
3
4
5
6
7
A
B
C
D
E
DIN1 (COAX)
DIN2 (COAX)
DIN1 (XLR)
DIN2 (XLR)
DIN3 (XLR)
DIN4 (XLR)
DAUX-RTN (XLR)
DST-OUT (COAX1)
DST-OUT (COAX2)
DST-OUT (XLR)
DAUX-SND (XLR)
J8B YKC21-3708
J8A YKC21-3708
J1 NC3FAH
J4 NC3FAH
J5 NC3FAH
J6 NC3FAH
J7 NC3FAH
J9B YKC21-3708
J9A YKC21-3708
J2 NC3MAH
J3 NC3MAH
C128 0.01u
C129 0.01u
C130 0.1u
C131 0.1u
C132 0.1u
C133 0.1u
C134 0.1u
C135 0.1u
C136 0.1u
C137 0.1u
C138 0.1u
C139 0.1u
C140 0.1u
C141 0.1u
C142 0.1u
C143 0.1u
R58 75
R59 75
R60 110
R61 110
R62 110
R63 110
R64 110
R65 4.7k
R66 4.7k
R67 4.7k
R68 4.7k
R69 4.7k
R70 4.7k
R71 4.7k
R72 39
R73 43
R74 220
R75 43
R76 220
R77 39
R54 56
R55 56
R56 56
R57 56
U39
U40
U37
U38
26LS32
26LS31
HC58
U41 TRANS
U42 TRANS
U58 470PFT
U59 470PFT
U54 470PFT
U55 470PFT
U56 470PFT
U57 470PFT
C107 0.1u
C108 0.1u
C95 0.1u
C96 0.1u
C97 0.1u
C98 0.1u
C99 0.1u
U25D 74HC04
U25E 74HC04
U25F 74HC04
VCC
FGND 4
DIN1
DIN2
DIN3
DIN4
DIN5
\COAX1
\COAX2
DST
DSEND

P4
32FE-BT
to MODULE PCB
U43 74VHC541
U44 74HC541
U45 74HC540
C151 68p
C124 0.1u
C125 0.1u
C109 0.1u
C150 330p
R79 47
R80 47
R96
R78 75
MNR38470
FS 512FS
128FS G64FS 64FS
SLRCK
BDIRSYNC*
256FS
BFS
512FS-B1A
512FS-B1B
512FS-B2
512FS-C1
512FS-C2
512FS-C3
512FS-E
BG64FS
EXT-64FS
B128FS
B64FS-1
B64FS-2
BSLRCK-1
BSLRCK-2
BSLRCK-3
SLRCK*
EXT-FS*
EXT-256FS*
B256FS*
INSIN-CH1-2
INSIN-CH3-4
INSIN-CH5-6
INSIN-CH7-8
INSIN-CH9-10
INSIN-CH11-12
INSIN-CH13-14
INSIN-CH15-16
INSIN-MTR1-2
INSIN-MTR3-4
INSIN-MTR5-6
INSIN-MTR7-8
INSIN-MTR9-10
INSIN-MTR11-12
INSIN-MTR13-14
INSIN-MTR15-16
INSIN-MTR17-18
INSIN-MTR19-20
INSIN-MTR21-22
INSIN-MTR23-24
P2
32FE-BT
to MODULE PCB
INSIN-ST
INSOUT-ST
AUX-SND1-2
AUX-SND3-4
AUX-SND5-6
MTR-SND1-2*
MTR-SND3-4*
MTR-SND5-6*
MTR-SND7-8*
TDLRCK*-1
MTR-SND9-10*
MTR-SND11-12*
MTR-SND13-14*
MTR-SND15-16*
TDLRCK*-2
MTR-SND17-18
MTR-SND19-20
MTR-SND21-22
MTR-SND23-24
TDLRCK-3
DIN1-FS*
DIN2-FS*
DIN3-FS*
DIN4-FS*
DIN1-DATA
DIN2-DATA
DIN3-DATA
DIN4-DATA
P1
32FE-BT
to MONITOR PCB
EXT-256FS*
BG64FS
EXT-64FS
EXT-FS*
SLRCK*
MIC-DATA
AST-OUT
MONITOR
BMNRST
OUTLEVEL
DEMP0
DEMP1
MONSEL0
MONSEL1
STUDIO
CH1
MONO
DIM
EXT-SLATE
EXT-STUDIO
EXT-AUX
SLATE-TARRY
STUDIO-TARRY
AUX-TARRY
P3
20FE-BT
to ST-RTN PCB
EXT-256FS*
EXT-64FS
EXT-FS*
ST-RTN1-2
ST-RTN3-4
ST-RTN5-6
ST-RTN7-8
ST-RTN9-10
AST-RTN11-12
BMNRST

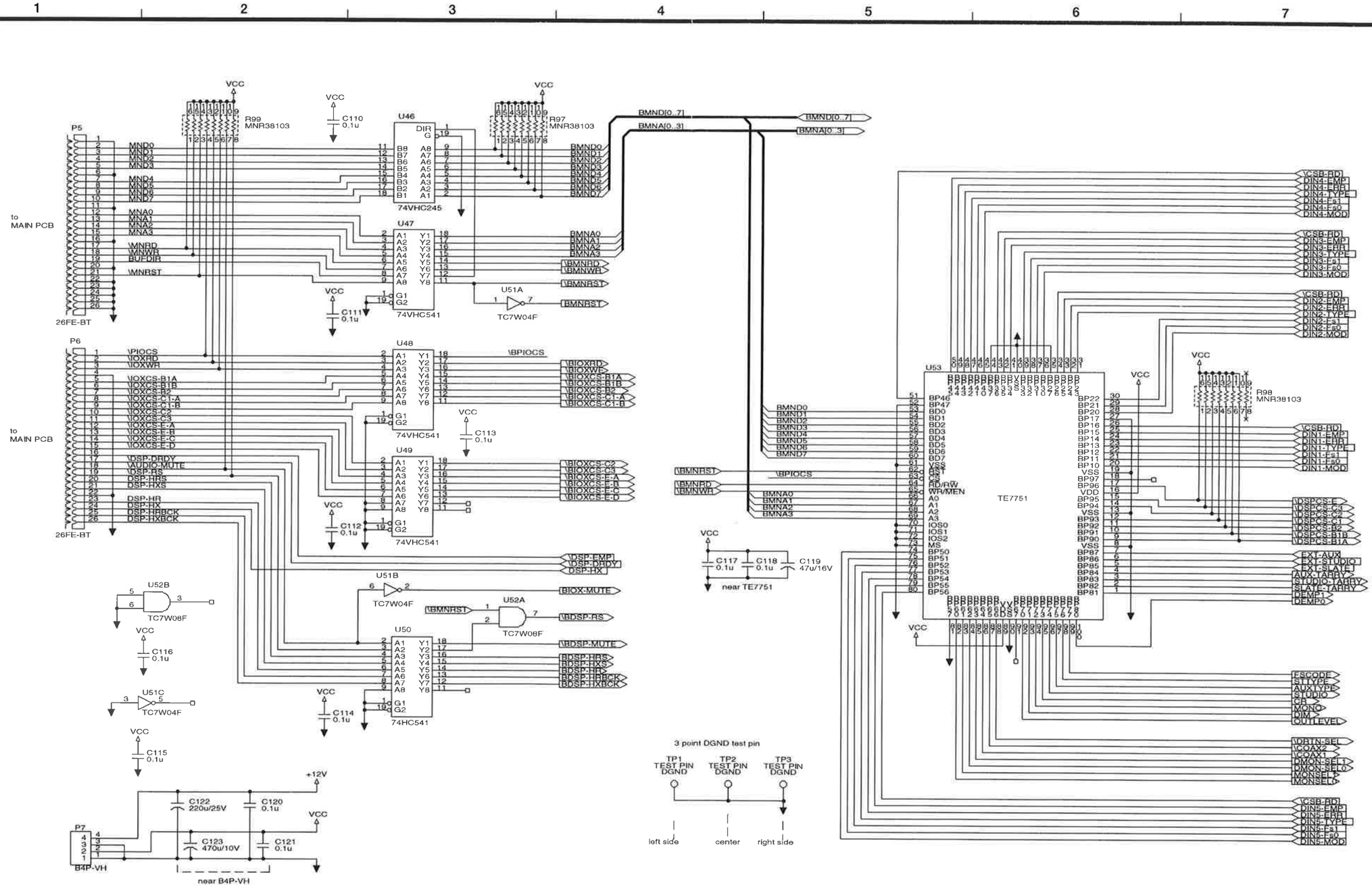
1
2
3
4
5
6
7
A
B
C
D
E
P5
26FE-BT
to MAIN PCB
MND0
MND1
MND2
MND3
MND4
MND5
MND6
MND7
MNA0
MNA1
MNA2
MNA3
\MNRD
\MNWR
BUF-DIR
\MNRST
P6
26FE-BT
to MAIN PCB
\PIOCS
\IOXRD
\IOXWR
\IOXCS-B1A
\IOXCS-B1B
\IOXCS-B2
\IOXCS-C1-A
\IOXCS-C1-B
\IOXCS-C2
\IOXCS-C3
\IOXCS-E-A
\IOXCS-E-B
\IOXCS-E-C
\IOXCS-E-D
\DSP-DRDY
\AUDIO-MUTE
DSP-RS
DSP-HRS
DSP-HXS
DSP-HR
DSP-HX
DSP-HRBCK
DSP-HXBCK
P7
B4P-VH
near B4P-VH
U46
74VHC245
U47
74VHC541
U48
74VHC541
U49
74VHC541
U50
74HC541
U51A
TC7W04F
U51B
TC7W04F
U51C
TC7W04F
U52A
TC7W08F
U52B
TC7W08F
R99 MNR38103
R97 MNR38103
R98 MNR38103
C110 0.1u
C111 0.1u
C112 0.1u
C113 0.1u
C114 0.1u
C115 0.1u
C116 0.1u
C117 0.1u
C118 0.1u
C119 47u/16V
near TE7751
C120 0.1u
C121 0.1u
C122 220u/25V
C123 470u/10V
+12V
VCC
BMND[0..7]
BMNA[0..3]
\BMNRST
\BMNRD
\BMNWR
\BPIOCS
\BIOXRD
\BIOXWR
\BIOXCS-B1A
\BIOXCS-B1B
\BIOXCS-B2
\BIOXCS-C1-A
\BIOXCS-C1-B
\BIOXCS-C2
\BIOXCS-C3
\BIOXCS-E-A
\BIOXCS-E-B
\BIOXCS-E-C
\BIOXCS-E-D
\DSP-EMP
\DSP-DRDY
DSP-HX
BIOX-MUTE
\BDSP-RS
\BDSP-MUTE
BDSP-HRS
BDSP-HXS
BDSP-HRS
BDSP-HRBCK
BDSP-HXBCK
U53
TE7751
3 point DGND test pin
TP1 TEST PIN DGND
TP2 TEST PIN DGND
TP3 TEST PIN DGND
left side
center
right side
\CSB-RD
DIN4-EMP
DIN4-EHR
DIN4-TYPE
DIN4-Fs1
DIN4-F s0
DIN4-MOD
DIN3-EMP
DIN3-EHR
DIN3-TYPE
DIN3-Fs1
DIN3-F s0
DIN3-MOD
DIN2-EMP
DIN2-EHR
DIN2-TYPE
DIN2-Fs1
DIN2-F s0
DIN2-MOD
DIN1-EMP
DIN1-EHR
DIN1-TYPE
DIN1-Fs1
DIN1-F s0
DIN1-MOD
\DSPCS-E
\DSPCS-C3
\DSPCS-C2
\DSPCS-C1
\DSPCS-B2
\DSPCS-B1B
\DSPCS-B1A
EXT-AUX
EXT-STUDIO
EXT-SLATE
AUX-TARRY
STUDIO-TARRY
SLATE-TARRY
DEMP1
DEMP0
ESCODE
STTYPE
AUXTYPE
STUDIO
CR
MONO
DIM
OUTLEVEL
\DRTN-SEL
\COAX2
\COAX1
DMON-SEL1
DMON-SEL0
MONSEL1
MONSEL0
\CSB-RD
DIN5-EMP
DIN5-EHR
DIN5-TYPE
DIN5-Fs1
DIN5-F s0
DIN5-MOD

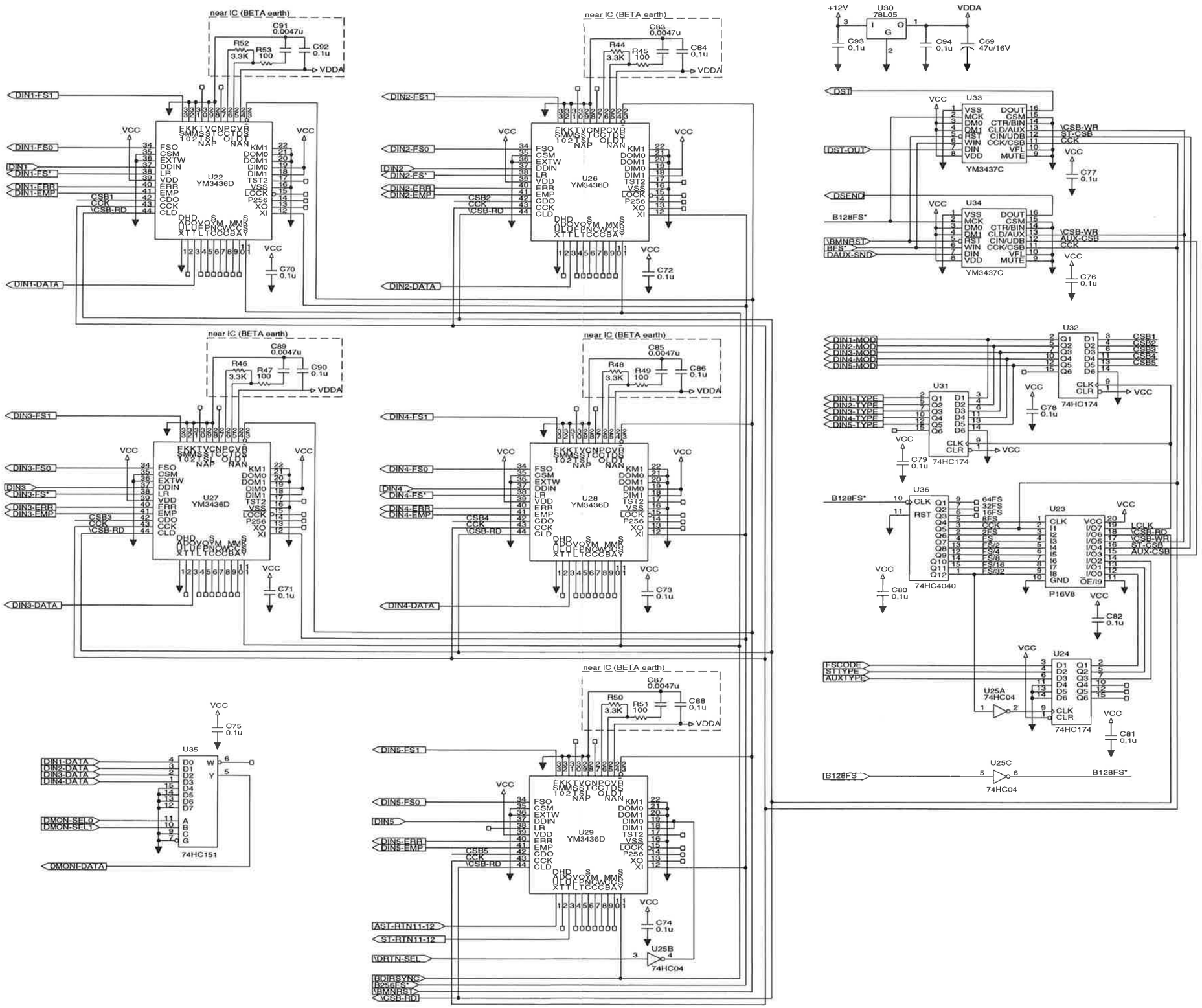
1
2
3
4
5
6
7
A
B
C
D
E
near IC (BETA earth)
C91 0.0047u
R52 3.3K
R53 100
C92 0.1u
VDDA
DIN1-FS1
DIN1-FS0
DIN1
DIN1-FS*
DIN1-ERR
DIN1-EMP
CSB1
CCK
\CSB-RD
VCC
U22
YM3436D
C70 0.1u
DIN1-DATA
near IC (BETA earth)
C83 0.0047u
R44 3.3K
R45 100
C84 0.1u
VDDA
DIN2-FS1
DIN2-FS0
DIN2
DIN2-FS*
DIN2-ERR
DIN2-EMP
CSB2
CCK
\CSB-RD
U26
YM3436D
C72 0.1u
DIN2-DATA
near IC (BETA earth)
C89 0.0047u
R46 3.3K
R47 100
C90 0.1u
VDDA
DIN3-FS1
DIN3-FS0
DIN3
DIN3-FS*
DIN3-ERR
DIN3-EMP
CSB3
CCK
\CSB-RD
U27
YM3436D
C71 0.1u
DIN3-DATA
near IC (BETA earth)
C85 0.0047u
R48 3.3K
R49 100
C86 0.1u
VDDA
DIN4-FS1
DIN4-FS0
DIN4
DIN4-FS*
DIN4-ERR
DIN4-EMP
CSB4
CCK
\CSB-RD
U28
YM3436D
C73 0.1u
DIN4-DATA
near IC (BETA earth)
C87 0.0047u
R50 3.3K
R51 100
C88 0.1u
VDDA
DIN5-FS1
DIN5-FS0
DIN5
DIN5-FS*
DIN5-ERR
DIN5-EMP
CSB5
CCK
\CSB-RD
U29
YM3436D
C74 0.1u
U25B
74HC04
\AST-RTN11-12
ST-RTN11-12
\DRTN-SEL
BDIRSYNC
B256FS*
\MNRST
\CSB-RD
+12V
U30
78L05
VDDA
C93 0.1u
C94 0.1u
C69 47u/16V
DST
DST-OUT
DSEND
B128FS*
\MNRST
BITS*
DAUX-SND
U33
U34
YM3437C
C77 0.1u
C76 0.1u
\CSB-WR
ST-CSB
CCK
AUX-CSB
DIN1-MOD
DIN2-MOD
DIN3-MOD
DIN4-MOD
DIN5-MOD
DIN1-TYPE
DIN2-TYPE
DIN3-TYPE
DIN4-TYPE
DIN5-TYPE
U31
U32
74HC174
C78 0.1u
C79 0.1u
CSB1
CSB2
CSB3
CSB4
CSB5
U36
74HC4040
U23
P16V8
C80 0.1u
C82 0.1u
64FS
32FS
16FS
8FS
FS
FS/2
FS/4
FS/8
FS/16
FS/32
LCLK
\CSB-RD
\CSB-WR
ST-CSB
AUX-CSB
FSCODE
STTYPE
AUXTYPE
U24
U25A
74HC04
C81 0.1u
U25C
B128FS
U35
74HC151
C75 0.1u
DIN1-DATA
DIN2-DATA
DIN3-DATA
DIN4-DATA
DMON-SEL0
DMON-SEL1
DMONI-DATA

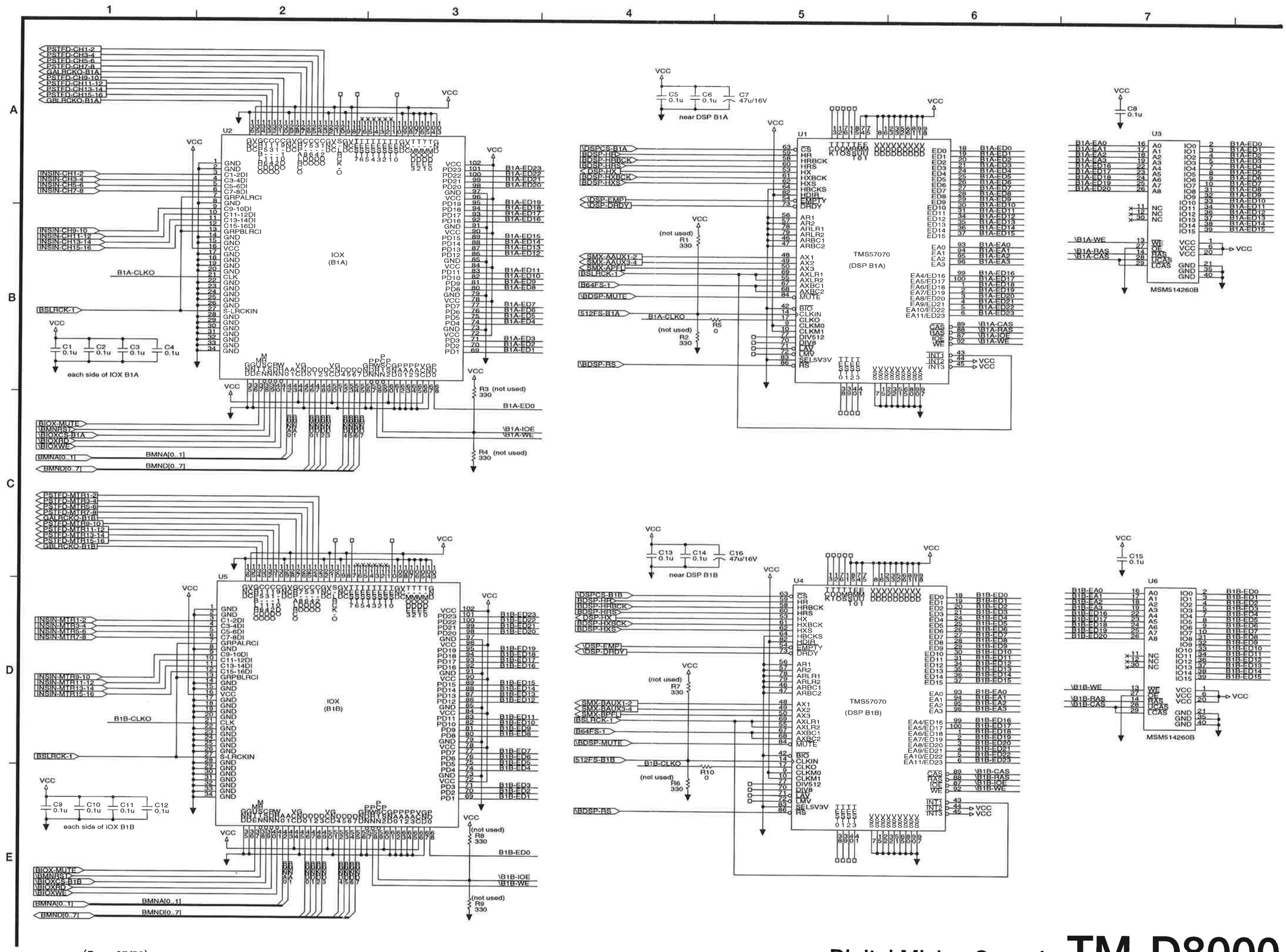

Digital Mixing Console **TM-D8000**

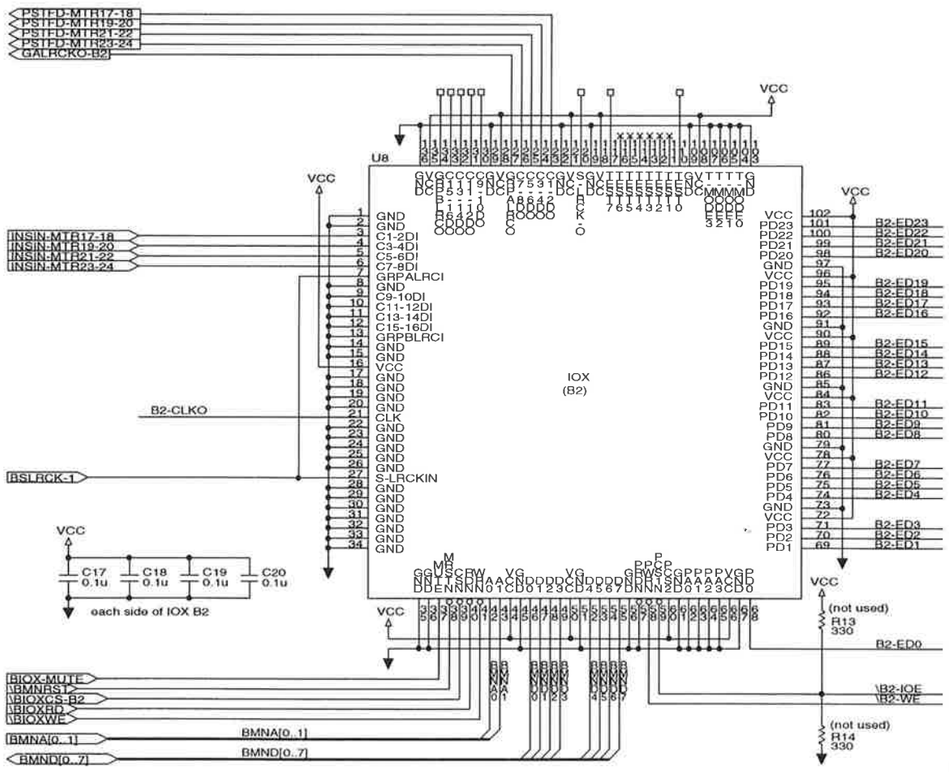
PSTFD-MTR17-18
PSTFD-MTR19-20
PSTFD-MTR21-22
PSTFD-MTR23-24
GALRCKO-B2
U8
IOX
(B2)
VCC
INSIN-MTR17-18
INSIN-MTR19-20
INSIN-MTR21-22
INSIN-MTR23-24
B2-CLKO
BSLRCK-1
C17 0.1u
C18 0.1u
C19 0.1u
C20 0.1u
each side of IOX B2
B2-ED23
B2-ED22
B2-ED21
B2-ED20
B2-ED19
B2-ED18
B2-ED17
B2-ED16
B2-ED15
B2-ED14
B2-ED13
B2-ED12
B2-ED11
B2-ED10
B2-ED9
B2-ED8
B2-ED7
B2-ED6
B2-ED5
B2-ED4
B2-ED3
B2-ED2
B2-ED1
B2-ED0
(not used)
R13
330
\B2-IOE
\B2-WE
(not used)
R14
330
BIOX-MUTE
\BMNRST-1
\BIOXCS-B2
\BIOXRD
\BIOXWE
BMNA[0..1]
BMND[0..7]

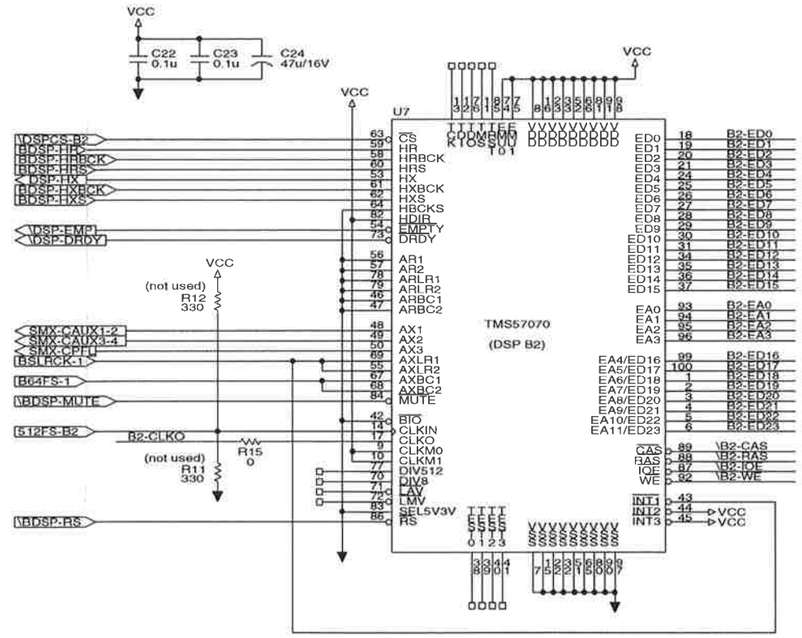
U7
TMS57070
(DSP B2)
VCC
C22 0.1u
C23 0.1u
C24 47u/16V
\DSPCS-B2
BDSP-HRS
BDSP-HRBCK
BDSP-HRCS
DSP-HX
BDSP-HXBCK
BDSP-HXS
\DSP-EMP
\DSP-DRDY
SMX-CAUX1-2
SMX-CAUX3-4
SMX-CPFL
BSLRCK-1
B64FS-1
\BDSP-MUTE
512FS-B2
B2-CLKO
(not used)
R12
330
R15
0
(not used)
R11
330
\BDSP-RS
B2-ED0
B2-ED1
B2-ED2
B2-ED3
B2-ED4
B2-ED5
B2-ED6
B2-ED7
B2-ED8
B2-ED9
B2-ED10
B2-ED11
B2-ED12
B2-ED13
B2-ED14
B2-ED15
B2-ED16
B2-ED17
B2-ED18
B2-ED19
B2-ED20
B2-ED21
B2-ED22
B2-ED23
B2-EA0
B2-EA1
B2-EA2
B2-EA3
\B2-CAS
\B2-RAS
\B2-IOE
\B2-WE
INT1
INT2
INT3
U9
MSM514260B
C21 0.1u
\B2-WE
\B2-RAS
\B2-CAS

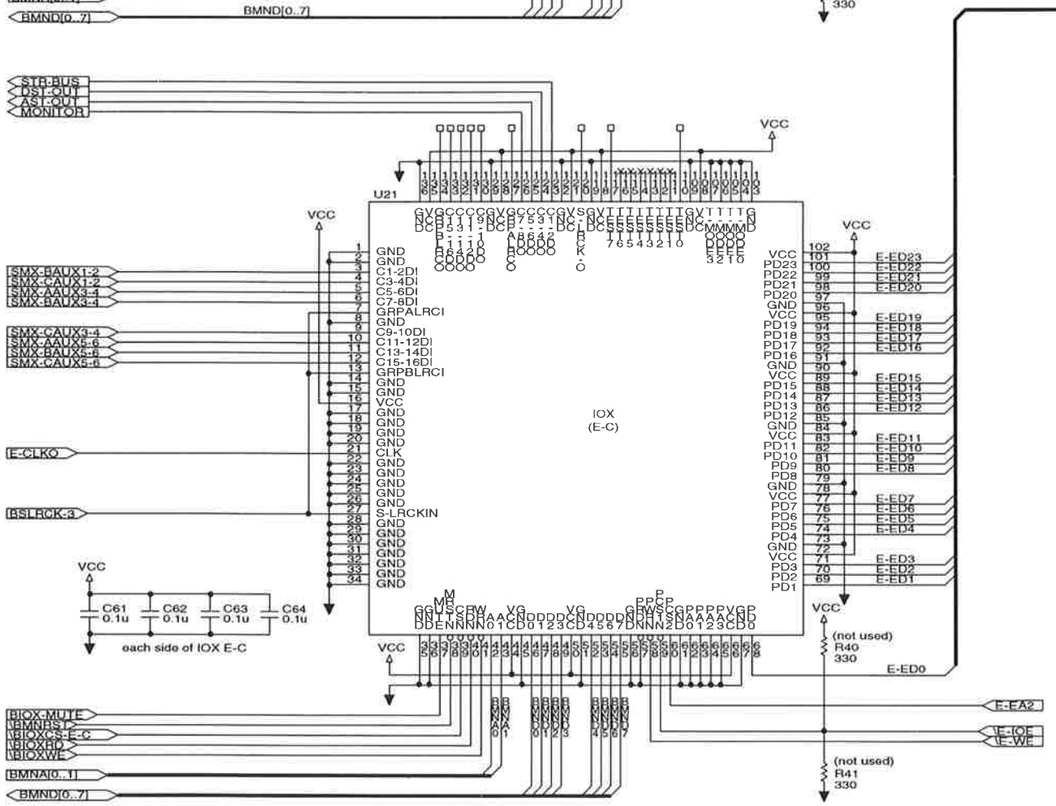
STR-BUS
DST-OUT
AST-OUT
MONITOR
U21
IOX
(E-C)
VCC
SMX-BAUX1-2
SMX-CAUX1-2
SMX-AAUX3-4
SMX-BAUX3-4
SMX-CAUX3-4
SMX-AAUX5-6
SMX-BAUX5-6
SMX-CAUX5-6
E-CLKO
BSLRCK-3
C61 0.1u
C62 0.1u
C63 0.1u
C64 0.1u
each side of IOX E-C
E-ED23
E-ED22
E-ED21
E-ED20
E-ED19
E-ED18
E-ED17
E-ED16
E-ED15
E-ED14
E-ED13
E-ED12
E-ED11
E-ED10
E-ED9
E-ED8
E-ED7
E-ED6
E-ED5
E-ED4
E-ED3
E-ED2
E-ED1
E-ED0
(not used)
R40
330
(not used)
R41
330
E-EA2
\E-IOE
\E-WE
BIOX-MUTE
\BMNRST-2
\BIOXCS-E-C
\BIOXRD
\BIOXWE
BMNA[0..1]
BMND[0..7]

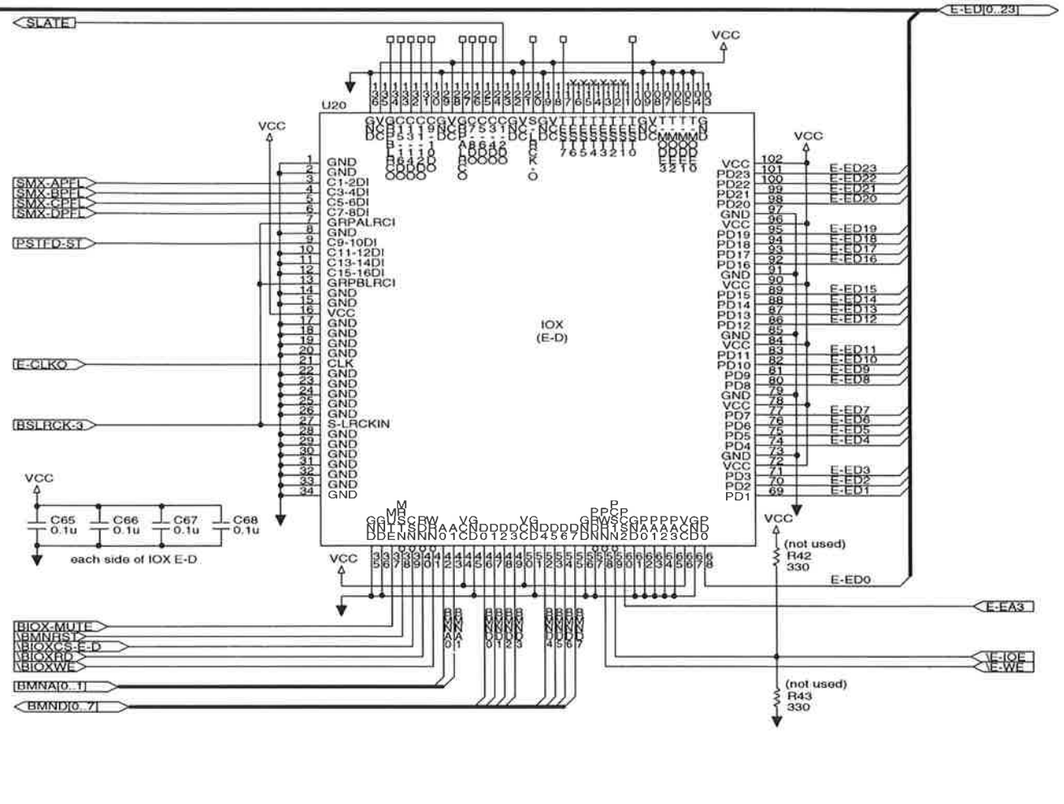
SLATE
E-ED[0..23]
U20
IOX
(E-D)
VCC
SMX-APFL
SMX-BPFL
SMX-CPFL
SMX-DPFL
PSTFD-ST
E-CLKO
BSLRCK-3
C65 0.1u
C66 0.1u
C67 0.1u
C68 0.1u
each side of IOX E-D
(not used)
R42
330
E-ED0
(not used)
R43
330
E-EA3
\E-IOE
\E-WE
BIOX-MUTE
\BMNRST-2
\BIOXCS-E-D
\BIOXRD
\BIOXWE
BMNA[0..1]
BMND[0..7]

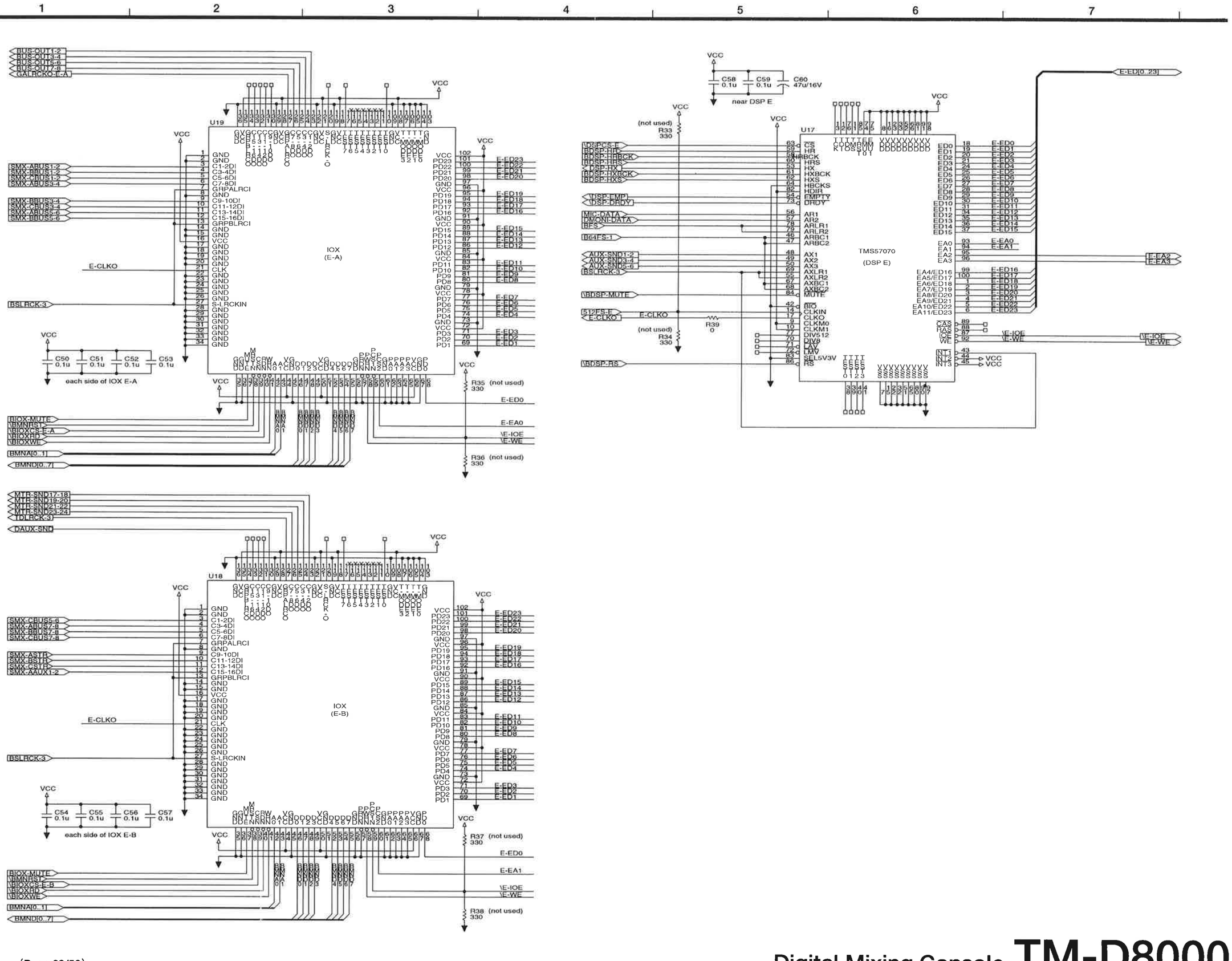
1
2
3
4
5
6
7
A
B
C
D
E
U19
IOX
(E-A)
U18
IOX
(E-B)
U17
TMS57070
(DSP E)
near DSP E
each side of IOX E-A
each side of IOX E-B
C50 0.1u
C51 0.1u
C52 0.1u
C53 0.1u
C54 0.1u
C55 0.1u
C56 0.1u
C57 0.1u
C58 0.1u
C59 0.1u
C60 47u/16V
VCC
GND
E-CLKO
BSLRCK-3
S-LRCKIN
CLK
BIOX-MUTE
\BMNRST
\BIOXCS-E-A
\BIOXCS-E-B
\BIOXRD
\BIOXWE
BMNA[0..1]
BMND[0..7]
BUS-OUT1-2
BUS-OUT3-4
BUS-OUT5-6
BUS-OUT7-8
GALRCKO-E-A
SMX-ABUS1-2
SMX-BBUS1-2
SMX-CBUS1-2
SMX-ABUS3-4
SMX-BBUS3-4
SMX-CBUS3-4
SMX-ABUS5-6
SMX-BBUS5-6
SMX-CBUS5-6
SMX-ABUS7-8
SMX-BBUS7-8
SMX-CBUS7-8
SMX-ASTR
SMX-BSTR
SMX-CSTR
SMX-AAUX1-2
MTR-SND17-18
MTR-SND19-20
MTR-SND21-22
MTR-SND23-24
TDLRCK-3
DAUX-SND
R33 330 (not used)
R34 330 (not used)
R35 330 (not used)
R36 330 (not used)
R37 330 (not used)
R38 330 (not used)
R39 0
E-ED[0..23]
E-ED0
E-ED1
E-ED2
E-ED3
E-ED4
E-ED5
E-ED6
E-ED7
E-ED8
E-ED9
E-ED10
E-ED11
E-ED12
E-ED13
E-ED14
E-ED15
E-ED16
E-ED17
E-ED18
E-ED19
E-ED20
E-ED21
E-ED22
E-ED23
E-EA0
E-EA1
E-EA2
E-EA3
\E-IOE
\E-WE
\DSPCS-E
\DSP-HIR
\DSP-HRBCK
\DSP-HRS
\DSP-HX
\DSP-HXBCK
\DSP-HXS
\DSP-EMPT
\DSP-DRDY
MIC-DATA
DMONI-DATA
BFS
B64FS-1
AUX-SND1-2
AUX-SND3-4
AUX-SND5-6
BSLRCK-3
\BDSP-MUTE
512FS-E
E-CLKO
\BDSP-RS
(not used)

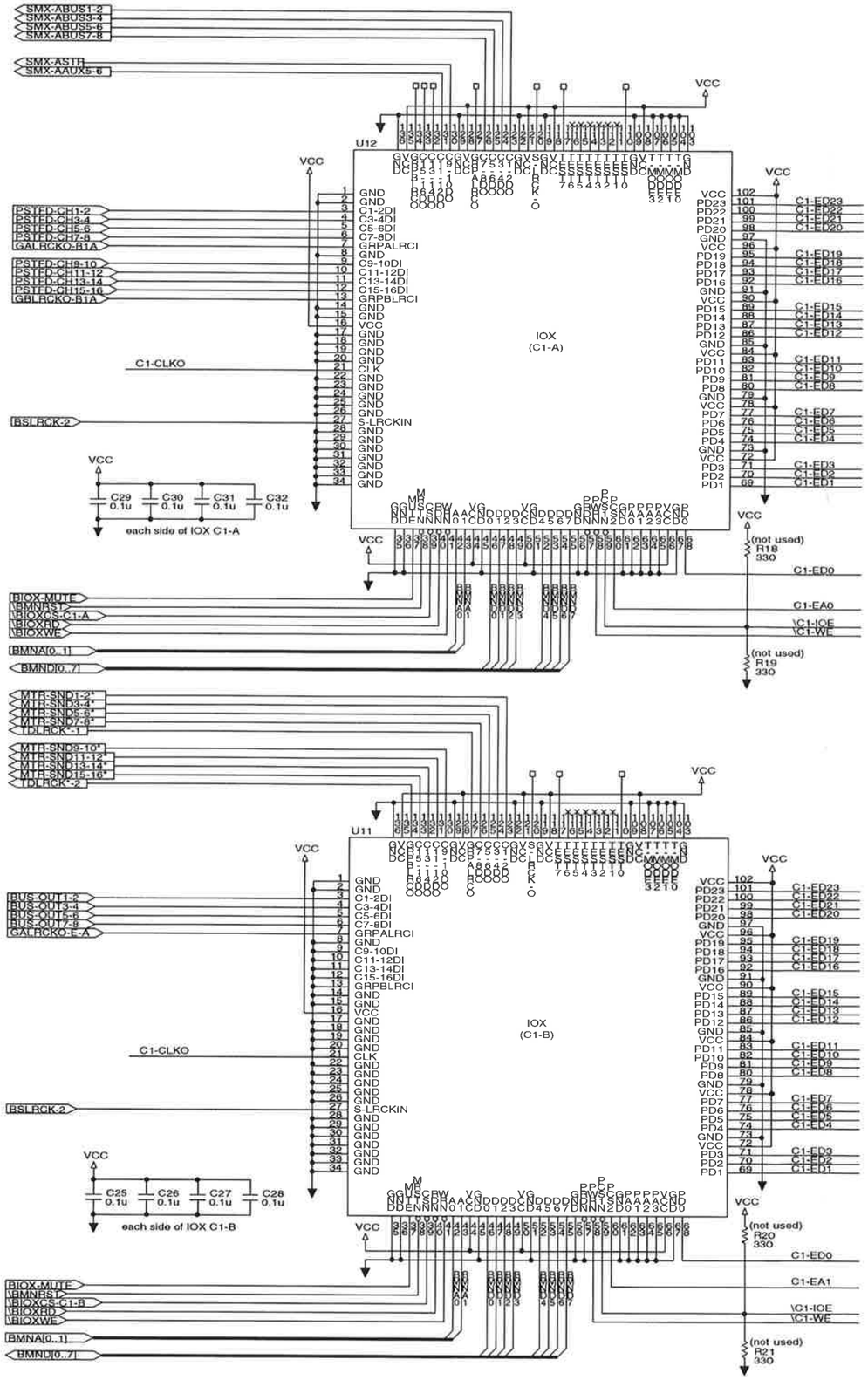
SMX-ABUS1-2
SMX-ABUS3-4
SMX-ABUS5-6
SMX-ABUS7-8
SMX-ASTH
SMX-AAUX5-6
U12
IOX
(C1-A)
PSTED-CH1-2
PSTED-CH3-4
PSTED-CH5-6
PSTED-CH7-8
GALRCKO-B1A
PSTED-CH9-10
PSTED-CH11-12
PSTED-CH13-14
PSTED-CH15-16
GBLRCKO-B1A
C1-CLKO
BSLRCK-2
S-LRCKIN
C29 0.1u
C30 0.1u
C31 0.1u
C32 0.1u
each side of IOX C1-A
C1-ED23
C1-ED22
C1-ED21
C1-ED20
C1-ED19
C1-ED18
C1-ED17
C1-ED16
C1-ED15
C1-ED14
C1-ED13
C1-ED12
C1-ED11
C1-ED10
C1-ED9
C1-ED8
C1-ED7
C1-ED6
C1-ED5
C1-ED4
C1-ED3
C1-ED2
C1-ED1
(not used) R18 330
C1-ED0
C1-EA0
\C1-IOE
\C1-WE
(not used) R19 330
BIOX-MUTE
\BMNRST
\BIOXCS-C1-A
\BIOXRD
\BIOXWE
BMNA[0..1]
BMND[0..7]
MTR-SND1-2*
MTR-SND3-4*
MTR-SND5-6*
MTR-SND7-8*
TDLRCK-1
MTR-SND9-10*
MTR-SND11-12*
MTR-SND13-14*
MTR-SND15-16*
TDLRCK-2
U11
IOX
(C1-B)
BUS-OUT1-2
BUS-OUT3-4
BUS-OUT5-6
BUS-OUT7-8
GALRCKO-E-A
C1-CLKO
BSLRCK-2
S-LRCKIN
C25 0.1u
C26 0.1u
C27 0.1u
C28 0.1u
each side of IOX C1-B
C1-ED23
C1-ED22
C1-ED21
C1-ED20
C1-ED19
C1-ED18
C1-ED17
C1-ED16
C1-ED15
C1-ED14
C1-ED13
C1-ED12
C1-ED11
C1-ED10
C1-ED9
C1-ED8
C1-ED7
C1-ED6
C1-ED5
C1-ED4
C1-ED3
C1-ED2
C1-ED1
(not used) R20 330
C1-ED0
C1-EA1
\C1-IOE
\C1-WE
(not used) R21 330

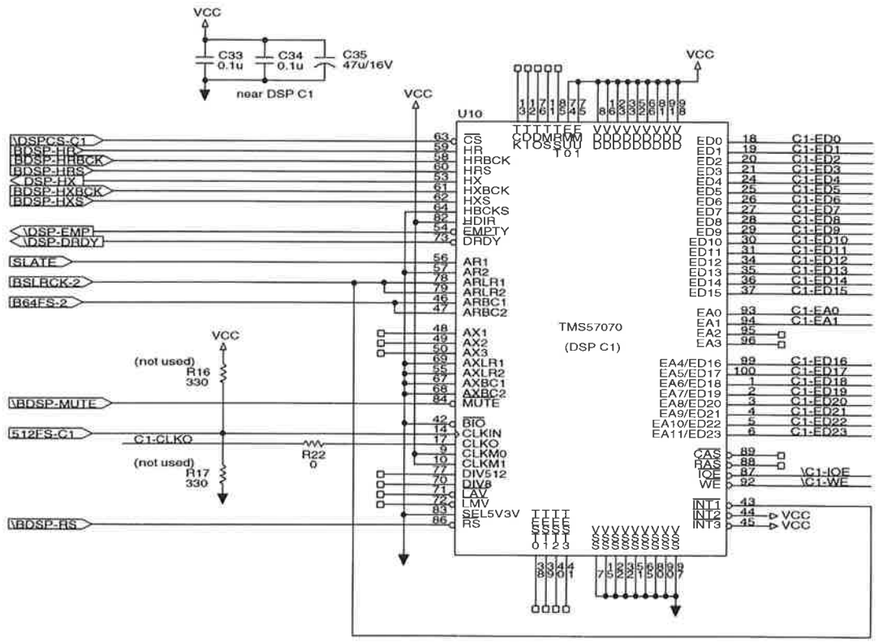
C33 0.1u
C34 0.1u
C35 47u/16V
near DSP C1
U10
TMS57070
(DSP C1)
\DSPCS-C1
BDSP-HR
BDSP-HRBCK
BDSP-HRS
DSP-HX
BDSP-HXBCK
BDSP-HXS
\DSP-EMP
\DSP-DRDY
SLATE
BSLRCK-2
B64FS-2
\BDSP-MUTE
512FS-C1
C1-CLKO
\BDSP-RS
(not used) R16 330
(not used) R17 330
R22 0
ED0 C1-ED0
ED1 C1-ED1
ED2 C1-ED2
ED3 C1-ED3
ED4 C1-ED4
ED5 C1-ED5
ED6 C1-ED6
ED7 C1-ED7
ED8 C1-ED8
ED9 C1-ED9
ED10 C1-ED10
ED11 C1-ED11
ED12 C1-ED12
ED13 C1-ED13
ED14 C1-ED14
ED15 C1-ED15
EA0 C1-EA0
EA1 C1-EA1
EA2
EA3
EA4/ED16 C1-ED16
EA5/ED17 C1-ED17
EA6/ED18 C1-ED18
EA7/ED19 C1-ED19
EA8/ED20 C1-ED20
EA9/ED21 C1-ED21
EA10/ED22 C1-ED22
EA11/ED23 C1-ED23
\C1-IOE
\C1-WE
VCC
VCC
VCC

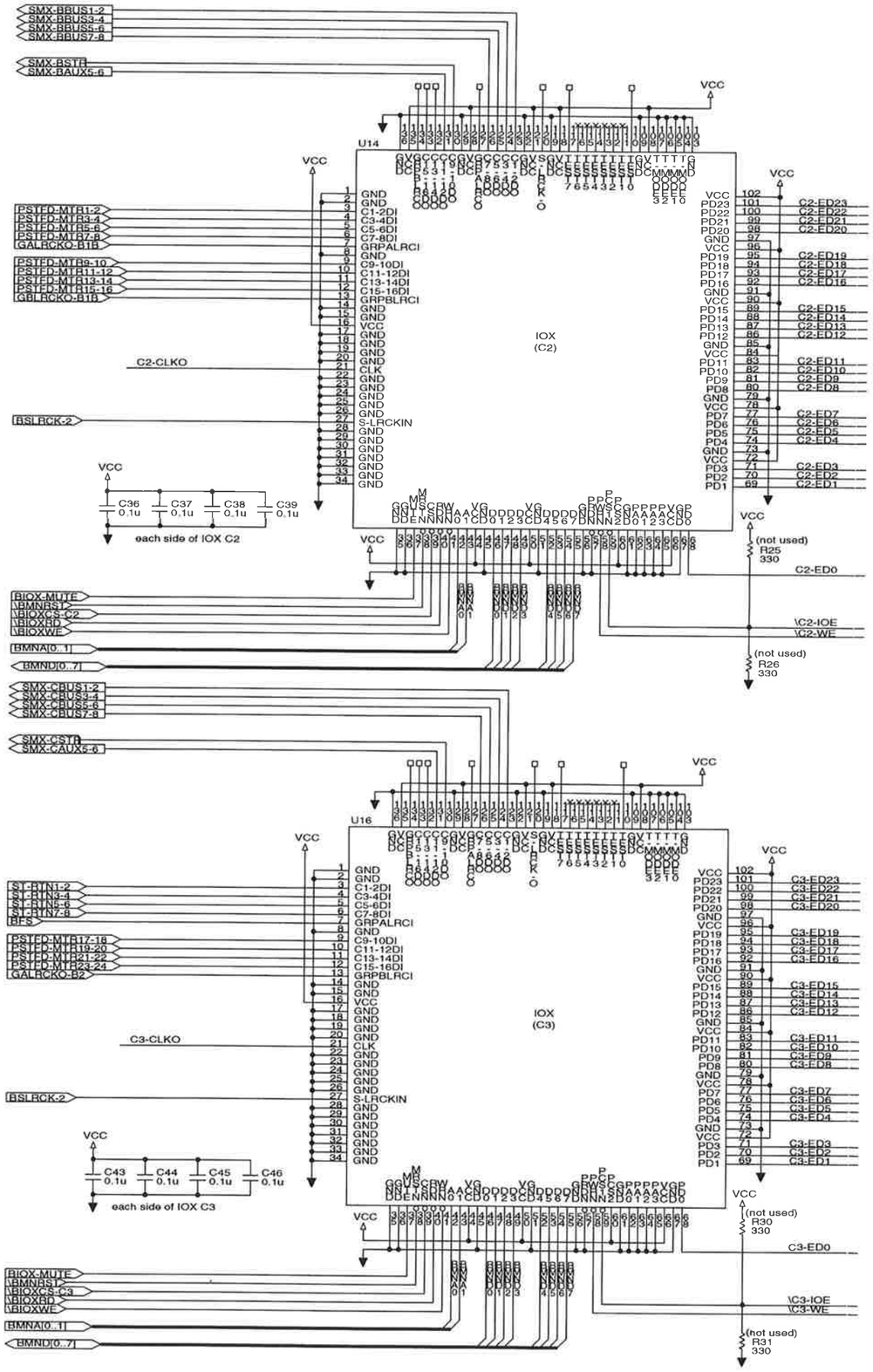
SMX-BBUS1-2
SMX-BBUS3-4
SMX-BBUS5-6
SMX-BBUS7-8
SMX-BSTR
SMX-BAUX5-6
U14
IOX
(C2)
VCC
GND
PSTFD-MTR1-2
PSTFD-MTR3-4
PSTFD-MTR5-6
PSTFD-MTR7-8
GALRCKO-B1R
PSTFD-MTR9-10
PSTFD-MTR11-12
PSTFD-MTR13-14
PSTFD-MTR15-16
GBLRCKO-B1R
C2-CLKO
BSLRCK-2
C36 0.1u
C37 0.1u
C38 0.1u
C39 0.1u
each side of IOX C2
C2-ED23
C2-ED22
C2-ED21
C2-ED20
C2-ED19
C2-ED18
C2-ED17
C2-ED16
C2-ED15
C2-ED14
C2-ED13
C2-ED12
C2-ED11
C2-ED10
C2-ED9
C2-ED8
C2-ED7
C2-ED6
C2-ED5
C2-ED4
C2-ED3
C2-ED2
C2-ED1
C2-ED0
(not used)
R25
330
BIOX-MUTE
\BMNRST
\BIOXCS-C2
\BIOXRD
\BIOXWE
BMNA[0..1]
BMND[0..7]
\C2-IOE
\C2-WE
(not used)
R26
330
SMX-CBUS1-2
SMX-CBUS3-4
SMX-CBUS5-6
SMX-CBUS7-8
SMX-CSTR
SMX-CAUX5-6
U16
IOX
(C3)
ST-RTN1-2
ST-RTN3-4
ST-RTN5-6
ST-RTN7-8
BFS
PSTFD-MTR17-18
PSTFD-MTR19-20
PSTFD-MTR21-22
PSTFD-MTR23-24
GALRCKO-B2
C3-CLKO
BSLRCK-2
C43 0.1u
C44 0.1u
C45 0.1u
C46 0.1u
each side of IOX C3
C3-ED23
C3-ED22
C3-ED21
C3-ED20
C3-ED19
C3-ED18
C3-ED17
C3-ED16
C3-ED15
C3-ED14
C3-ED13
C3-ED12
C3-ED11
C3-ED10
C3-ED9
C3-ED8
C3-ED7
C3-ED6
C3-ED5
C3-ED4
C3-ED3
C3-ED2
C3-ED1
C3-ED0
(not used)
R30
330
BIOX-MUTE
\BMNRST
\BIOXCS-C3
\BIOXRD
\BIOXWE
BMNA[0..1]
BMND[0..7]
\C3-IOE
\C3-WE
(not used)
R31
330

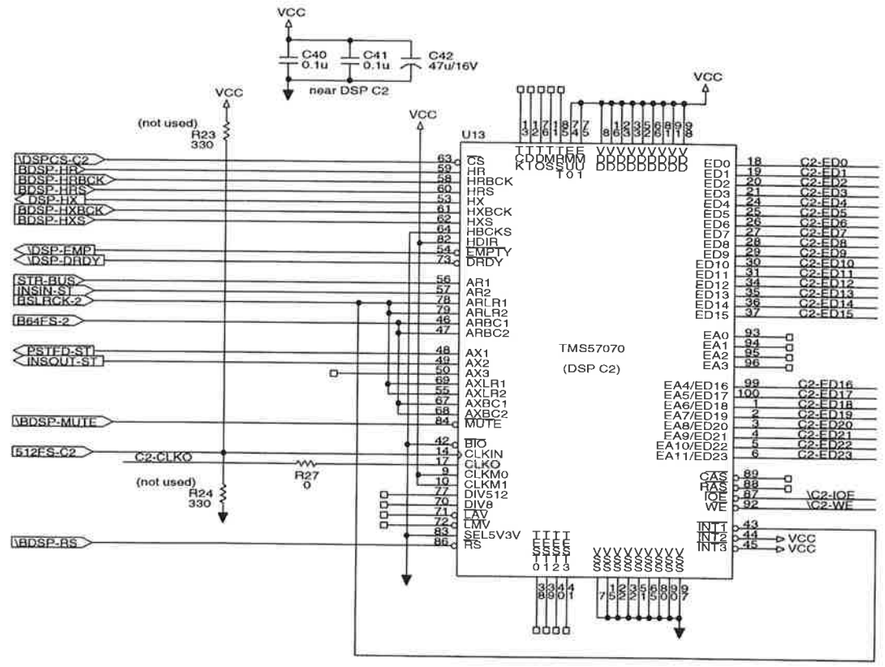
C40 0.1u
C41 0.1u
C42 47u/16V
near DSP C2
(not used)
R23
330
R24
330
R27
0
U13
TMS57070
(DSP C2)
\DSPCS-C2
BDSP-HR
BDSP-HRBCK
BDSP-HRS
DSP-HX
BDSP-HXBCK
BDSP-HXS
\DSP-EMP
\DSP-DRDY
STR-BUS
INSIN-ST
BSLRCK-2
B64FS-2
PSTFD-ST
INSOUT-ST
\BDSP-MUTE
512FS-C2
C2-CLKO
\BDSP-RS
C2-ED0
C2-ED1
C2-ED2
C2-ED3
C2-ED4
C2-ED5
C2-ED6
C2-ED7
C2-ED8
C2-ED9
C2-ED10
C2-ED11
C2-ED12
C2-ED13
C2-ED14
C2-ED15
C2-ED16
C2-ED17
C2-ED18
C2-ED19
C2-ED20
C2-ED21
C2-ED22
C2-ED23
\C2-IOE
\C2-WE
VCC

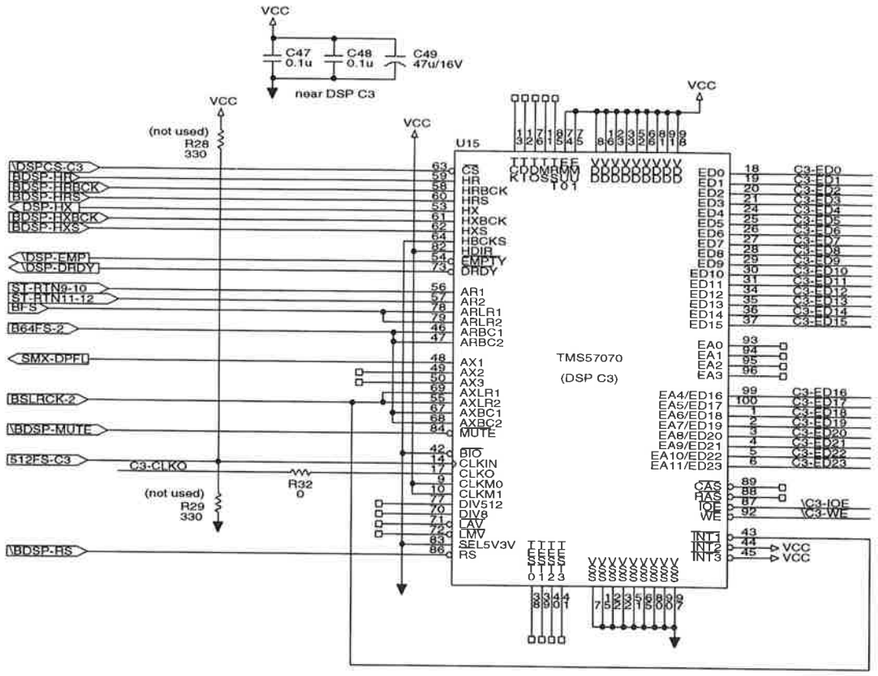
C47 0.1u
C48 0.1u
C49 47u/16V
near DSP C3
(not used)
R28
330
R29
330
R32
0
U15
TMS57070
(DSP C3)
\DSPCS-C3
BDSP-HR
BDSP-HRBCK
BDSP-HRS
DSP-HX
BDSP-HXBCK
BDSP-HXS
\DSP-EMP
\DSP-DRDY
ST-RTN9-10
ST-RTN11-12
BFS
B64FS-2
SMX-DPFI
BSLRCK-2
\BDSP-MUTE
512FS-C3
C3-CLKO
\BDSP-RS
C3-ED0
C3-ED1
C3-ED2
C3-ED3
C3-ED4
C3-ED5
C3-ED6
C3-ED7
C3-ED8
C3-ED9
C3-ED10
C3-ED11
C3-ED12
C3-ED13
C3-ED14
C3-ED15
C3-ED16
C3-ED17
C3-ED18
C3-ED19
C3-ED20
C3-ED21
C3-ED22
C3-ED23
\C3-IOE
\C3-WE
VCC

PCB,XLR
P102
J101
NC3FAHR1-0
MIC INPUT
LINE INPUT
INSERTION
J102
P101
B3B-EH
PHANT_ON
PHANTOM
S102B
SW2-2A
LINE
S101-1A
SW2-2-2
PAD(20dB)
S101-2A
SW2-2-2
R101-104:13KF
R101 47(1/4W)
R102
R103
R104
R105
R106 0
R107 0
R108 1KF
R109 1KF
R110 2.4KF
R111 240F
R112 22K
R113 22K
R114 10
R115 10
R116 1.5K
R117 1.5K
R118 2.4KF
R119 2.4KF
R120 15K
R121 15K
R122 2.4KF
R123 2.4KF
R124 39
R125 24KF
R126 24KF
R127 100K
R128 100
R129 100K
R130 15KF
R131 3.3KF
R132 1K
R133 330
R134 330
R135 10KF
R136 10KF
R137 51K
R138 51K
R139 100
R140 20K
R141 1K
R142 1K
R143 100K
R144 100K
R145 100K
R146 100K
R147 100K
R148 100K
R149 100K
C101 47/63V
C102 10/63V
C103 10/63V
C104 0.0015
C105 0.0015
C106 470/6.3V
C107 470/6.3V
C108 47/25V
C109 47/25V
C110 22P
C111 0.1
C112 0.1
C115 0.1
C116 10/25V
C118 10/25V
C119 0.1
C121 0.47/50V
C122 10P
C123 10P
C124 NONE
C125 NONE
C126 47/25V
C127 47/63V
C128 47/63V
D101
D102
D103
D104
D105 1SS133
D106 SLR34MG3F
D107 SLR34VR3F
SIGNAL
TRIM
Q1 DTA115ESA
Q2 2SC1815GR
Q101 2SB737S
Q102 2SB737S
Q103 2SC2603F
Q104 2SC2603F
Q105 2SA1015GR
Q106 2SA1015GR
U101A NE5532AN
U101B NE5532AN
U102A
U102B UPC358C
TP1 D.GND
TP101 A.GND
W1
VCC
V+15
V-15
V+48
VA+5
GND
GNDA
J1
IL-SDD-20S-S2L2
AIN-
AIN+
+48V
+48V
GNDA
GNDA
P_ON
VCC
VCC
GND
GND
A+5V
GNDA
GNDA
+15V
+15V
GNDA
GNDA
-15V
-15V
C1 0.1
C2 100/10V
C3 0.1
C5 0.1
C6 100/25V
C7 0.1
C8 100/25V
C9 0.1

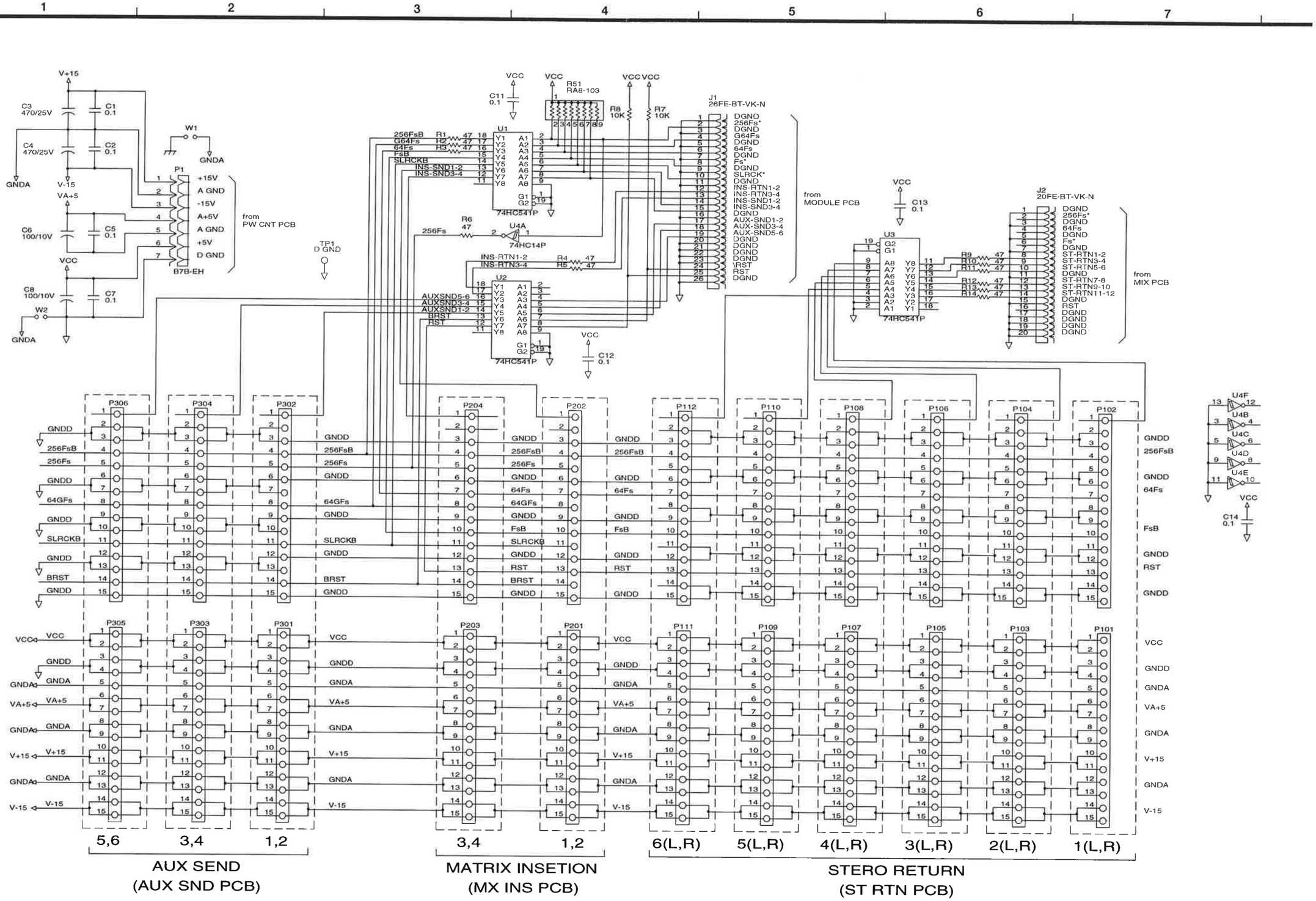
1
2
3
4
5
6
7
A
B
C
D
E
V+15
C3 470/25V
C1 0.1
C4 470/25V
C2 0.1
GNDA
V-15
VA+5
C6 100/10V
C5 0.1
VCC
C8 100/10V
C7 0.1
W1
W2
GNDA
P1
+15V
A GND
-15V
A+5V
A GND
+5V
D GND
B7B-EH
from PW CNT PCB
TP1 D GND
VCC
C11 0.1
R51 RA8-103
R8 10K
R7 10K
U1
256FsB
G64Fs
64Fs
FSB
SLRCKB
INS-SND1-2
INS-SND3-4
R1 47
R2 47
R3 47
74HC541P
R6 47
256Fs
U4A
74HC14P
INS-RTN1-2
INS-RTN3-4
R4 47
R5 47
U2
AUXSND5-6
AUXSND3-4
AUXSND1-2
BRST
RST
C12 0.1
J1
26FE-BT-VK-N
DGND
256Fs*
DGND
G64Fs
DGND
64Fs
DGND
Fs*
DGND
SLRCK*
DGND
INS-RTN1-2
INS-RTN3-4
INS-SND1-2
INS-SND3-4
DGND
AUX-SND1-2
AUX-SND3-4
AUX-SND5-6
DGND
DGND
DGND
DGND
\RST
RST
DGND
from MODULE PCB
C13 0.1
U3
R9 47
R10 47
R11 47
R12 47
R13 47
R14 47
J2
20FE-BT-VK-N
DGND
256Fs*
DGND
64Fs
DGND
Fs*
DGND
ST-RTN1-2
ST-RTN3-4
ST-RTN5-6
DGND
ST-RTN7-8
ST-RTN9-10
ST-RTN11-12
DGN0
RST
DGND
DGND
DGND
DGND
from MIX PCB
U4F
U4B
U4C
U4D
U4E
C14 0.1
P306
P304
P302
P204
P202
P112
P110
P108
P106
P104
P102
P305
P303
P301
P203
P201
P111
P109
P107
P105
P103
P101
GNDD
256FsB
256Fs
64GFs
SLRCKB
BRST
VCC
GNDA
VA+5
V+15
V-15
FsB
RST
5,6
3,4
1,2
3,4
1,2
6(L,R)
5(L,R)
4(L,R)
3(L,R)
2(L,R)
1(L,R)
AUX SEND
(AUX SND PCB)
MATRIX INSETION
(MX INS PCB)
STERO RETURN
(ST RTN PCB)

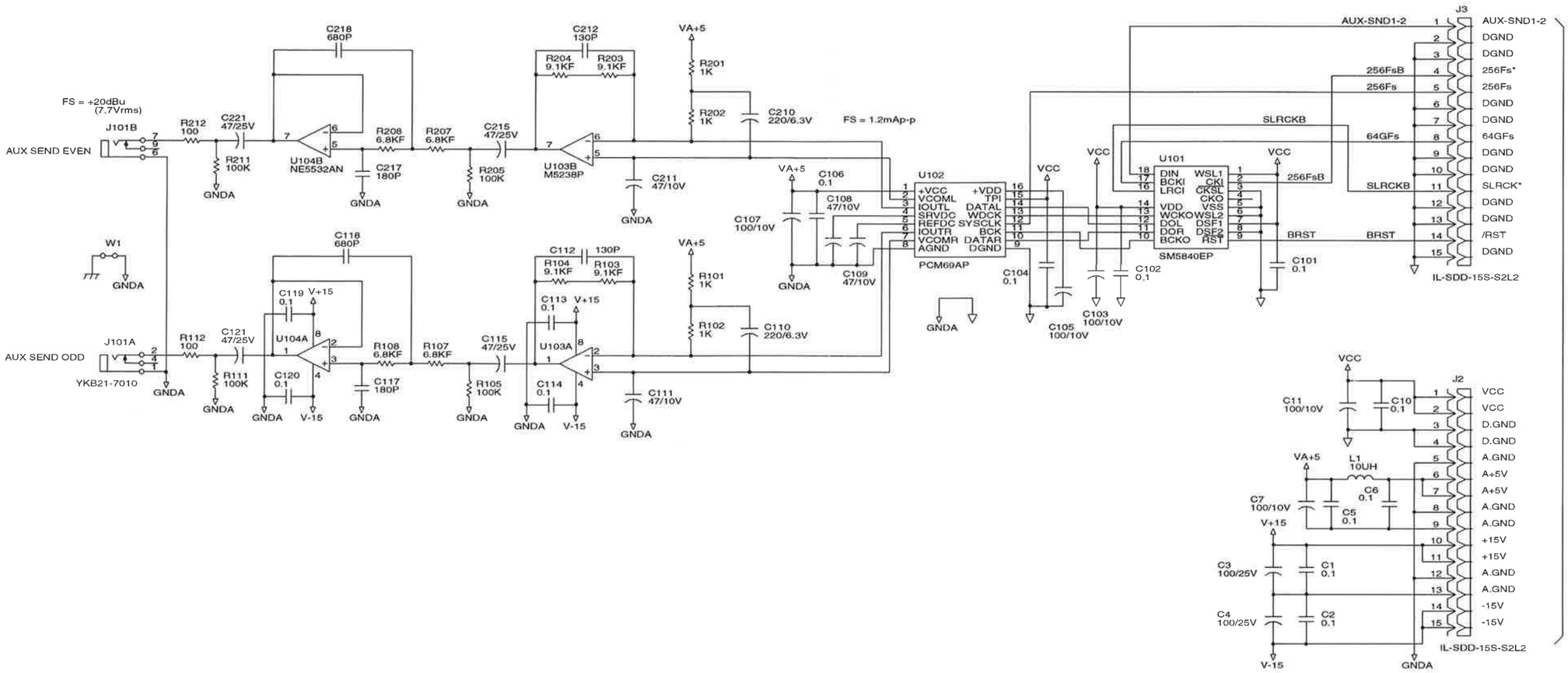
FS = +20dBu (7.7Vrms)
J101B
AUX SEND EVEN
J101A
AUX SEND ODD
YKB21-7010
W1
R212 100
R112 100
C221 47/25V
C121 47/25V
R211 100K
R111 100K
U104B NE5532AN
U104A
C218 680P
C118 680P
R208 6.8KF
R108 6.8KF
R207 6.8KF
R107 6.8KF
C217 180P
C117 180P
C215 47/25V
C115 47/25V
R205 100K
R105 100K
C119 0.1
C120 0.1
C112 130P
C212 130P
R104 9.1KF
R103 9.1KF
R204 9.1KF
R203 9.1KF
U103B M5238P
U103A
C113 0.1
C114 0.1
C211 47/10V
C111 47/10V
C210 220/6.3V
C110 220/6.3V
R201 1K
R202 1K
R101 1K
R102 1K
C106 0.1
C108 47/10V
C109 47/10V
C107 100/10V
FS = 1.2mAp-p
U102
PCM69AP
+VCC +VDD
VCOML TPI
IOUTL DATAL
SRVDC WDCK
REFDC SYSCLK
IOUTR BCK
VCOMR DATAR
AGND DGND
C104 0.1
C105 100/10V
C103 100/10V
C102 0.1
C101 0.1
U101
SM5840EP
DIN WSL1
BCKI CKI
LRCI CKSL
CKO
VDD VSS
WCKO WSL2
DOL DSF1
DOR DSF2
BCKO RST
J3
IL-SDD-15S-S2L2
AUX-SND1-2
DGND
256FsB
256Fs*
256Fs
64GFs
SLRCKB
SLRCK*
BRST
/RST
to AUX MOTHER PCB
J2
C11 100/10V
C10 0.1
L1 10UH
C6 0.1
C7 100/10V
C5 0.1
C3 100/25V
C1 0.1
C4 100/25V
C2 0.1
D.GND
A.GND
A+5V
+15V
-15V
V+15
V-15
VA+5
VCC
GNDA

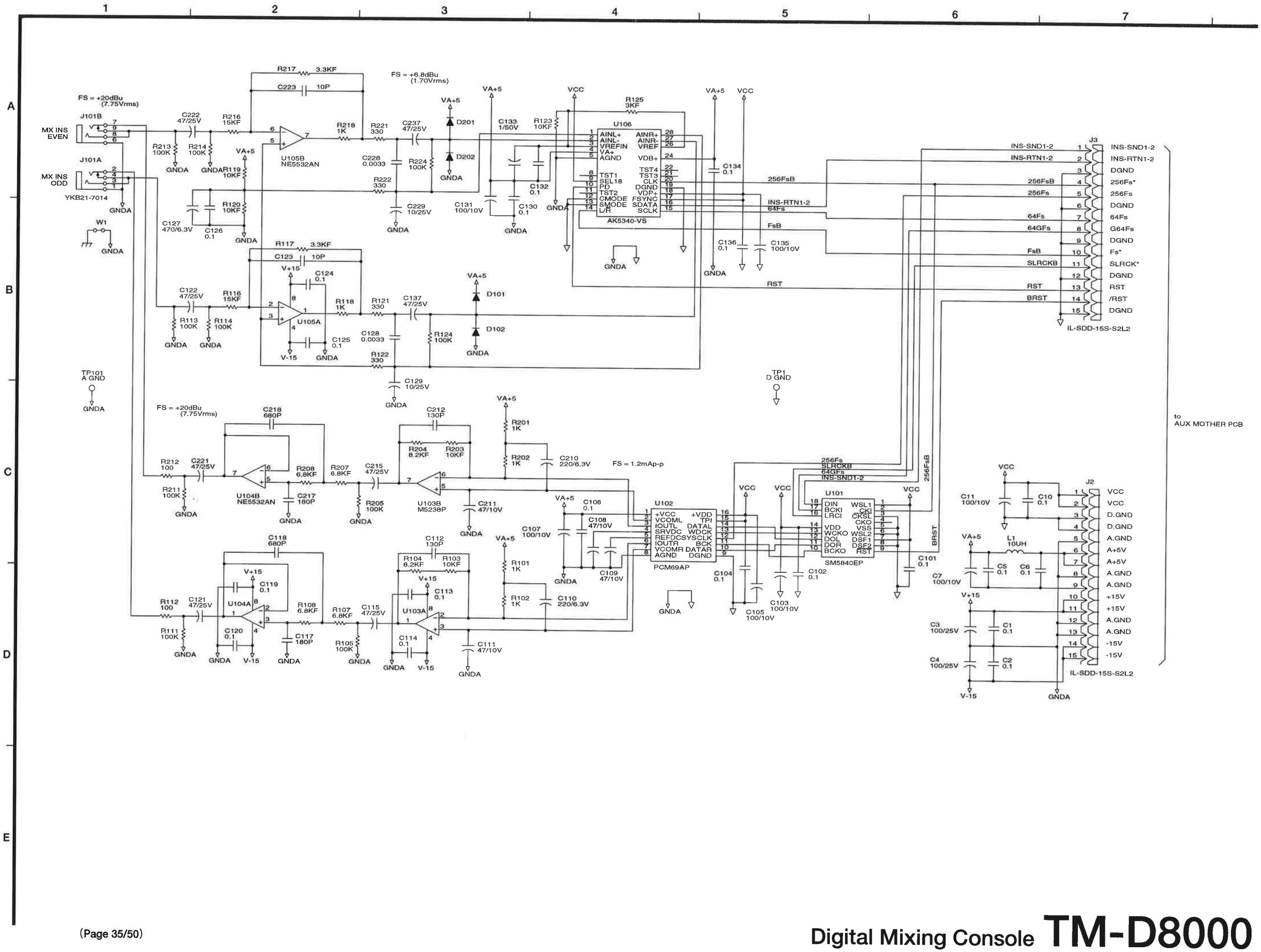
1
2
3
4
5
6
7
A
B
C
D
E
FS = +20dBu (7.75Vrms)
J101B
MX INS EVEN
J101A
MX INS ODD
YKB21-7014
W1
GNDA
C222 47/25V
R216 15KF
R213 100K
R214 100K
R119 10KF
R120 10KF
C127 470/6.3V
C126 0.1
VA+5
U105B NE5532AN
R217 3.3KF
C223 10P
R218 1K
R221 330
C237 47/25V
C228 0.0033
R224 100K
R222 330
C229 10/25V
FS = +6.8dBu (1.70Vrms)
D201
D202
C133 1/50V
R123 10KF
C131 100/10V
C132 0.1
C130 0.1
VCC
R125 3KF
U106
AINL+
AINL-
VREFIN
VA+
AGND
TST1
SEL18
PD
TST2
CMODE
SMODE
L/R
AINR+
AINR-
VREF
VDB+
TST4
TST3
CLK
DGND
VDP+
FSYNC
SDATA
SCLK
AK5340-VS
C134 0.1
C136 0.1
C135 100/10V
256FsB
INS-RTN1-2
64Fs
FsB
RST
R117 3.3KF
C123 10P
V+15
C124 0.1
C122 47/25V
R116 15KF
R113 100K
R114 100K
U105A
R118 1K
R121 330
C137 47/25V
C128 0.0033
R124 100K
R122 330
C129 10/25V
D101
D102
V-15
C125 0.1
TP101 A GND
TP1 D GND
J3
INS-SND1-2
INS-RTN1-2
DGND
256Fs*
256Fs
DGND
64Fs
G64Fs
DGND
Fs*
SLRCK*
DGND
RST
/RST
DGND
IL-SDD-15S-S2L2
to AUX MOTHER PCB
FS = +20dBu (7.75Vrms)
C218 680P
R212 100
C221 47/25V
R211 100K
U104B NE5532AN
R208 6.8KF
C217 180P
R207 6.8KF
C215 47/25V
R205 100K
U103B M5238P
C212 130P
R204 8.2KF
R203 10KF
R201 1K
R202 1K
C210 220/6.3V
C211 47/10V
FS = 1.2mAp-p
C106 0.1
C108 47/10V
C107 100/10V
C109 47/10V
U102
+VCC
VCOML
IOUTL
SRVDC
REFDC
IOUTR
VCOMR
AGND
+VDD
TPI
DATAL
WDCK
SYSCLK
BCK
DATAR
DGND
PCM69AP
C104 0.1
C105 100/10V
C103 100/10V
C102 0.1
256Fs
SLRCKB
64GFs
INS-SND1-2
256FsB
BRST
U101
DIN
BCKI
LRCI
WSL1
CKI
CKSL
CKO
VDD
WCKO
DOL
DOR
BCKO
VSS
WSL2
DSF1
DSF2
RST
SM5840EP
C101 0.1
C118 680P
R112 100
C121 47/25V
R111 100K
U104A
C119 0.1
C120 0.1
R108 6.8KF
C117 180P
R107 6.8KF
C115 47/25V
R105 100K
U103A
C112 130P
R104 8.2KF
R103 10KF
R101 1K
R102 1K
C110 220/6.3V
C113 0.1
C114 0.1
C111 47/10V
C11 100/10V
C10 0.1
L1 10UH
C5 0.1
C6 0.1
C7 100/10V
C3 100/25V
C1 0.1
C4 100/25V
C2 0.1
J2
VCC
VCC
D.GND
D.GND
A.GND
A+5V
A+5V
A.GND
A.GND
+15V
+15V
A.GND
A.GND
-15V
-15V
IL-SDD-15S-S2L2

1
2
3
4
5
6
7
A
B
C
D
E
TRIM
J101A
L
R151A 20K(RD)
R103 8.2K
C117 47/25V
R104 36K
C102 10P
R105 1K
U101B NE5532AN
R102 470
GNDA
W1
STEREO RETURN
J101B
R
YKB21-7010
R151B 20K(RD)
R203 8.2K
C217 47/25V
R204 36K
C202 10P
R205 1K
U101A
R202 470
R106 330
C116 47/25V
R107 330
R108 100K
C105 0.0033
C106 10/25V
R206 330
C216 47/25V
R207 330
R208 100K
C205 0.0033
C206 10/25V
D101
D102
D201
D202
VA+5
VCC
V+15
V-15
R109 10KF
C107 0.1
C108 10/25V
R110 10KF
R209 10KF
C207 0.1
C208 10/25V
R210 10KF
C103 0.1
C104 0.1
C112 1/50V
C111 0.1
C110 100/10V
C109 0.1
R111 10KF
R112 3KF
U102
AK5340-VS
AINL+
AINL-
VREFIN
VA+
AGND
TST1
SEL18
PD
TST2
CMODE
SMODE
L/R
AINR+
AINR-
VREF
VDB+
TST4
TST3
CLK
DGND
VDP+
FSYNC
SDATA
SCLK
C113 0.1
C115 0.1
C114 100/10V
256FsB
ST-RTN1-2
64Fs
FsB
RST
J1
IL-SDD-15S-S2L2
ST-RTN
D.GND
256Fs*
64Fs
Fs*
to AUX MOTHER PCB
TP1
D GND
C9 100/10V
C8 0.1
J2
L1 10UH
C7 100/10V
C6 0.1
C5 0.1
C3 100/25V
C1 0.1
C4 100/25V
C2 0.1
A.GND
+15V
-15V
TP101
A GND
Q2
DTA115ESA
C13 0.47/50V
Q1
2SC1815GR
R4 22K
U1A
R2 51K
R1 51K
R3 33
R7 100K
R6 100K
C12 0.1
D2 1SS133
D1 1SS133
R5 1K
SIGNAL
D3
SLR34MG3F
GNDD
U1B
UPC358C

SCHEMATIC DIAGRAM TM-D8000 MONITOR PCB (1/2)

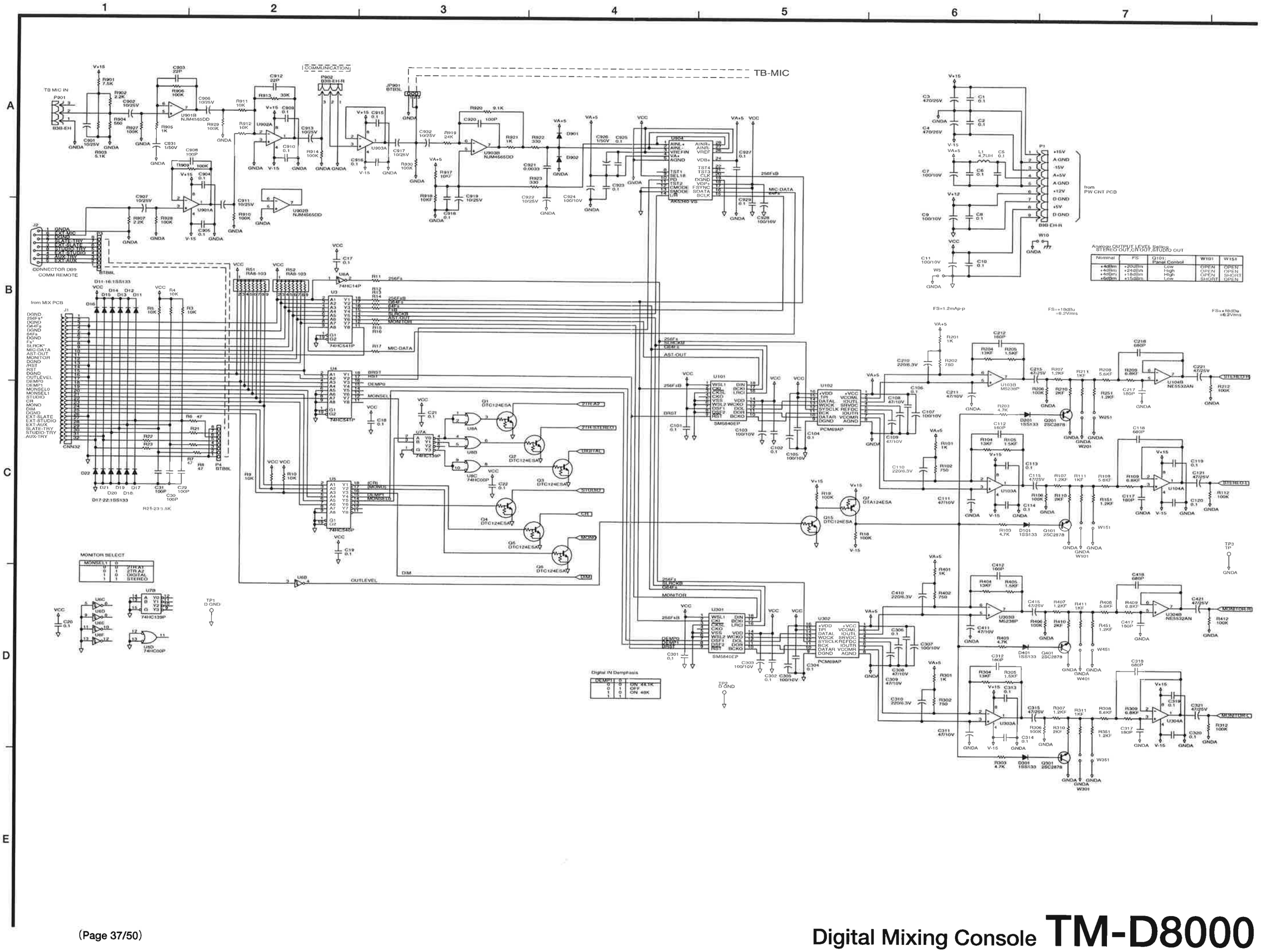

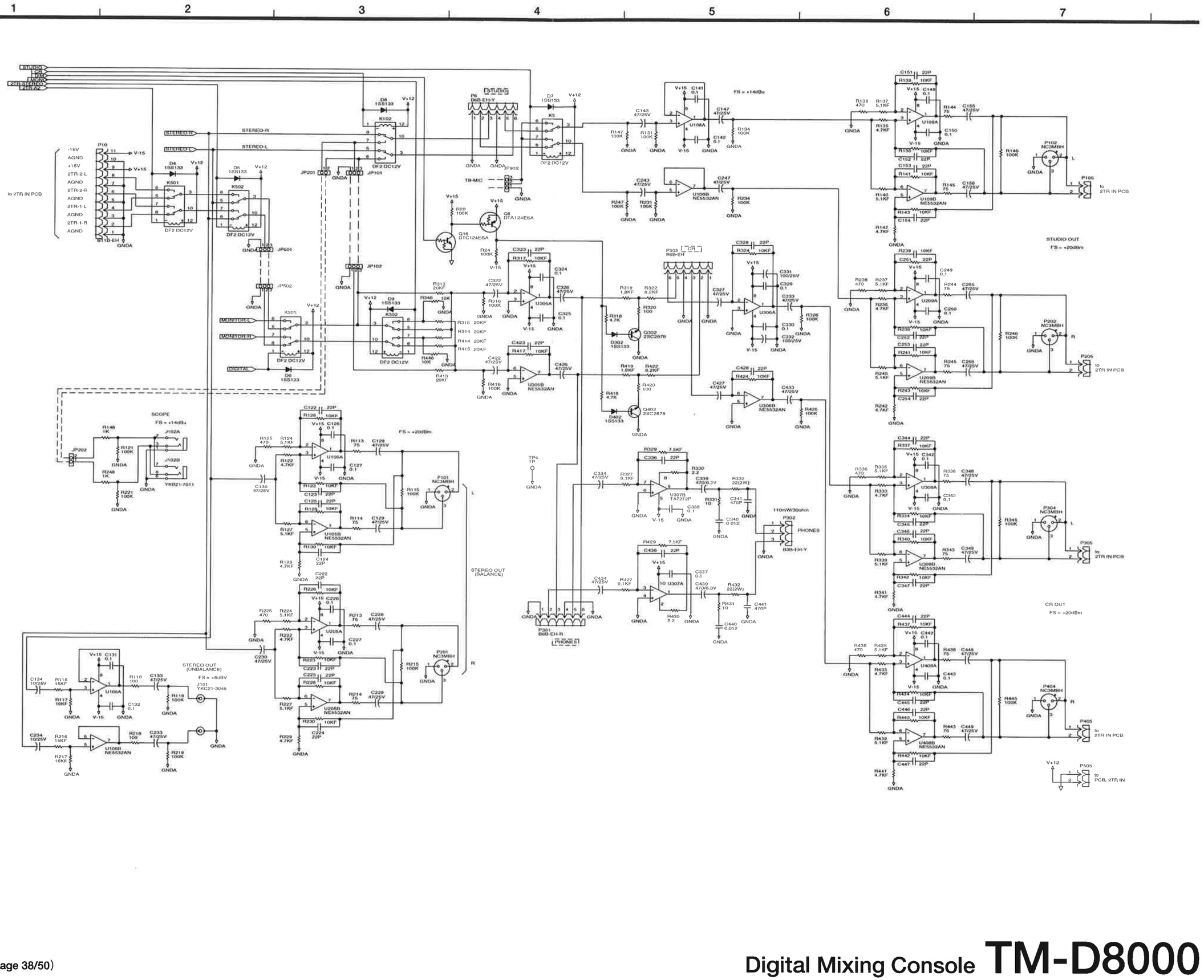
1
2
3
4
5
6
7
A
B
C
D
E
STEREO-R
STEREO-L
MONITOR-L
MONITOR-R
DIGITAL
STUDIO
CR
SCOPE
FS = +14dBu
FS = +20dBm
FS = +6dBV
STEREO OUT (BALANCE)
STEREO OUT (UNBALANCE)
STUDIO OUT
CR OUT
PHONES
110mW/30ohm
to 2TR IN PCB
P16
P6
P303
P302
P301
P101
P201
P102
P202
P304
P404
P105
P205
P305
P405
P505
JP201
JP101
JP102
JP501
JP502
JP902
JP202
K501
K502
K102
K5
K301
K302
J102A
J102B
J101
TB-MIC
D4 1SS133
D5 1SS133
D6 1SS133
D7 1SS133
D8 1SS133
D9 1SS133
D302 1SS133
D402 1SS133
Q8 DTA124ESA
Q16 DTC124ESA
Q302 2SC2878
Q402 2SC2878
U105A
U105B NE5532AN
U106A
U106B NE5532AN
U205A
U205B NE5532AN
U306A
U306B NE5532AN
U307A
U307B TA7272P
U108A
U108B NE5532AN
U109A
U109B NE5532AN
U208A
U208B NE5532AN
U308A
U308B NE5532AN
U408A
U408B NE5532AN
GNDA
V+15
V-15
V+12

AD PCB

CH3,4 Part No. = 2XX,25X

CH 5,6 Part No. = 3XX,35X

CH7,8 Part No. = 4XX,45X

CH9,10 Part No. = 5XX,55X

CH11,12 Part No. = 6XX,65X

CH13,14 Part No. = 7XX,75X

CH15,16 Part No. = 8XX,85X

2TR IN PCB

HP PCB

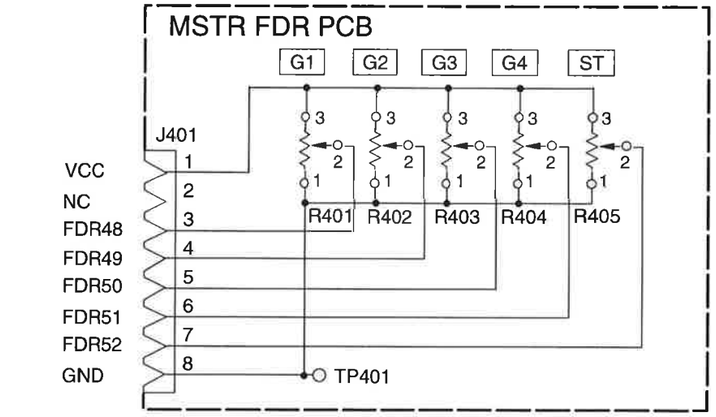

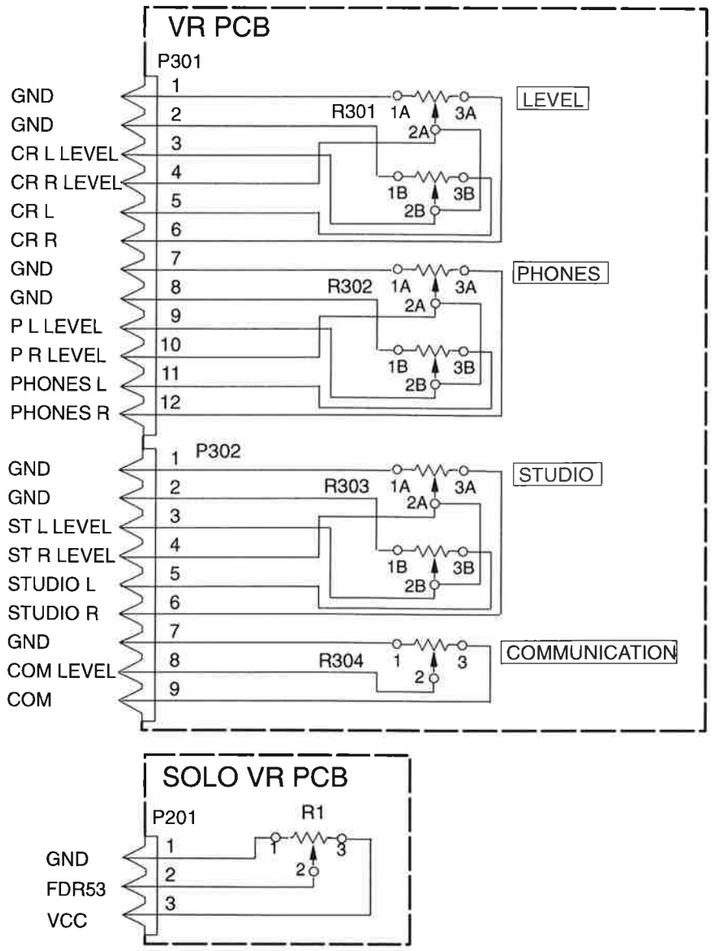

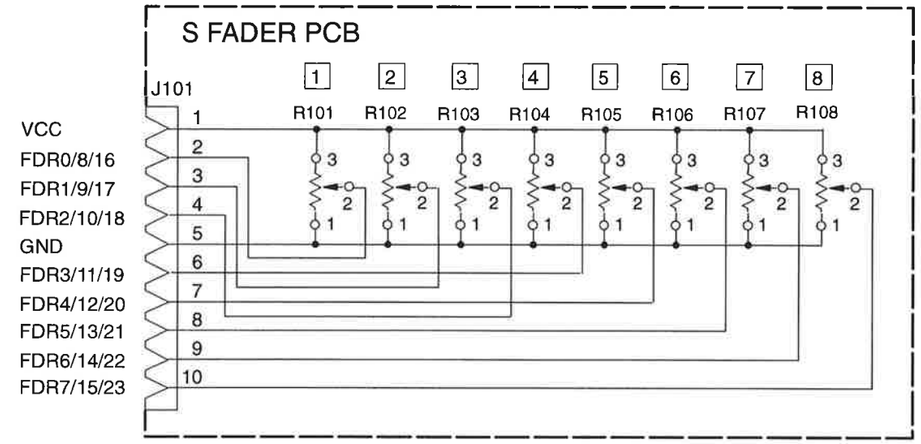

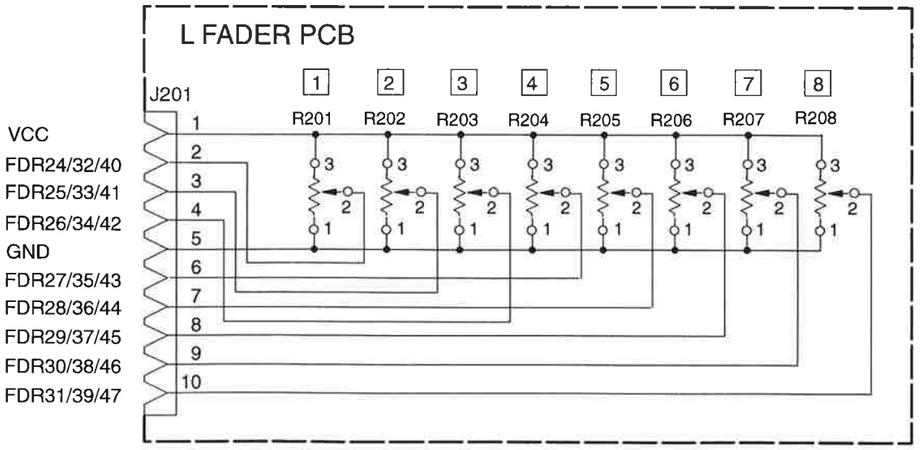

Channel No.	S1..8	S9..16	S17..24	L1..8	L9..16	L17..24
FDR No.	0..7	8..15	16..23	24..31	32..39	40..47

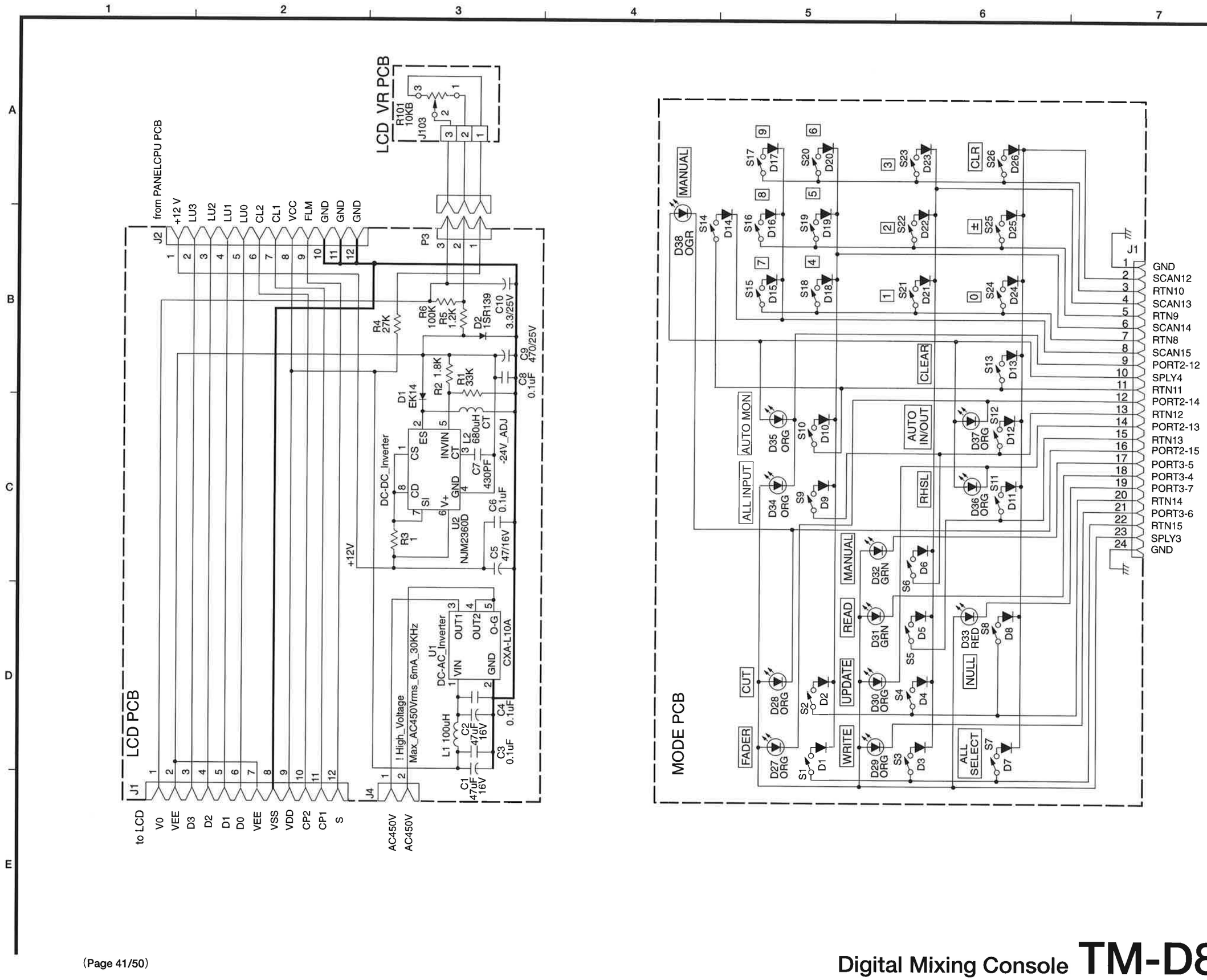
LCD PCB
LCD VR PCB
R101 10KB
J103
from PANELCPU PCB
J2
+12 V
LU3
LU2
LU1
LU0
CL2
CL1
VCC
FLM
GND
GND
GND
P3
R4 27K
R6 100K
R5 1.2K
D2 1SR139
C10 3.3/25V
C9 470/25V
C8 0.1uF
R2 1.8K
R1 33K
D1 EK14
L2 680uH
C7 430PF
-24V_ADJ
DC-DC_Inverter
CS
ES
INVIN
CT
CD
SI
V+
GND
U2 NJM2360D
R3 1
C6 0.1uF
C5 47/16V
+12V
U1 DC-AC_Inverter
VIN
OUT1
OUT2
O-G
GND
CXA-L10A
L1 100uH
C2 47uF 16V
C4 0.1uF
C3 0.1uF
C1 47uF 16V
J4
! High_Voltage
Max_AC450Vrms_6mA_30KHz
AC450V
AC450V
J1
to LCD
V0
VEE
D3
D2
D1
D0
VEE
VSS
VDD
CP2
CP1
S
MODE PCB
MANUAL
D38 OGR
S14
D14
S17
D17
S20
D20
S23
D23
CLR
S26
D26
S16
D16
S19
D19
S22
D22
±
S25
D25
S15
D15
S18
D18
S21
D21
S24
D24
CLEAR
S13
D13
AUTO MON
D35 ORG
S10
D10
AUTO IN/OUT
D37 ORG
S12
D12
ALL INPUT
D34 ORG
S9
D9
RHSL
D36 ORG
S11
D11
CUT
D28 ORG
S2
D2
READ
D31 GRN
S6
D6
MANUAL
D32 GRN
FADER
D27 ORG
S1
D1
UPDATE
D30 ORG
S4
D4
S5
D5
WRITE
D29 ORG
S3
D3
NULL
D33 RED
S8
D8
ALL SELECT
S7
D7
J1
GND
SCAN12
RTN10
SCAN13
RTN9
SCAN14
RTN8
SCAN15
PORT2-12
SPLY4
RTN11
PORT2-14
RTN12
PORT2-13
RTN13
PORT2-15
PORT3-5
PORT3-4
PORT3-7
RTN14
PORT3-6
RTN15
SPLY3
GND

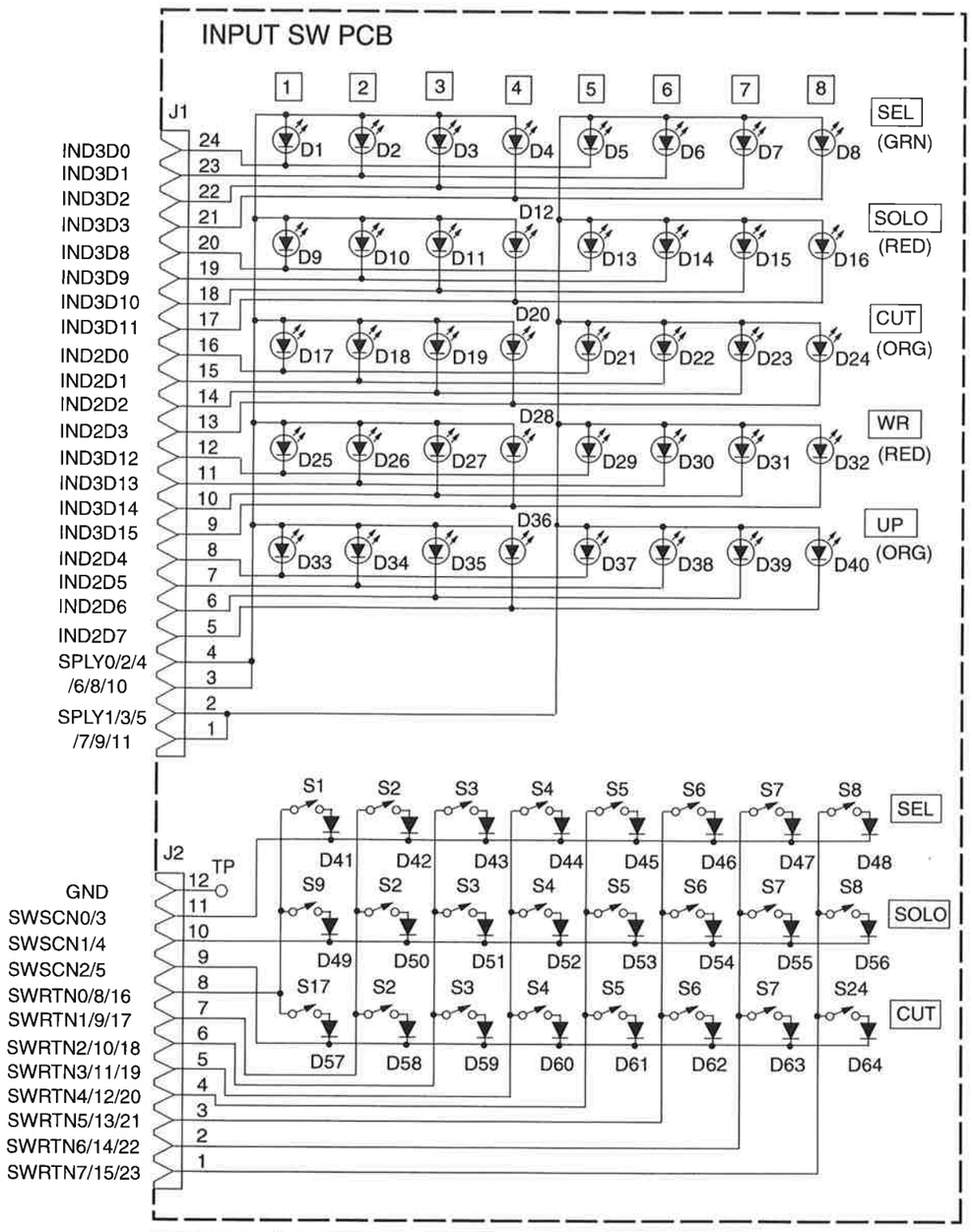

Channel No.	S1..8	S9..16	S17..24	L1..8	L9..16	L17..24
SPLY No.	0, 1	2, 3	4, 5	6, 7	8, 9	10, 11
SWSCN No.	0, 1, 2	0, 1, 2	0, 1, 2	3, 4, 5	3, 4, 5	3, 4, 5
SWRTN No.	0..7	8..15	16..23	0..7	8..15	16..23

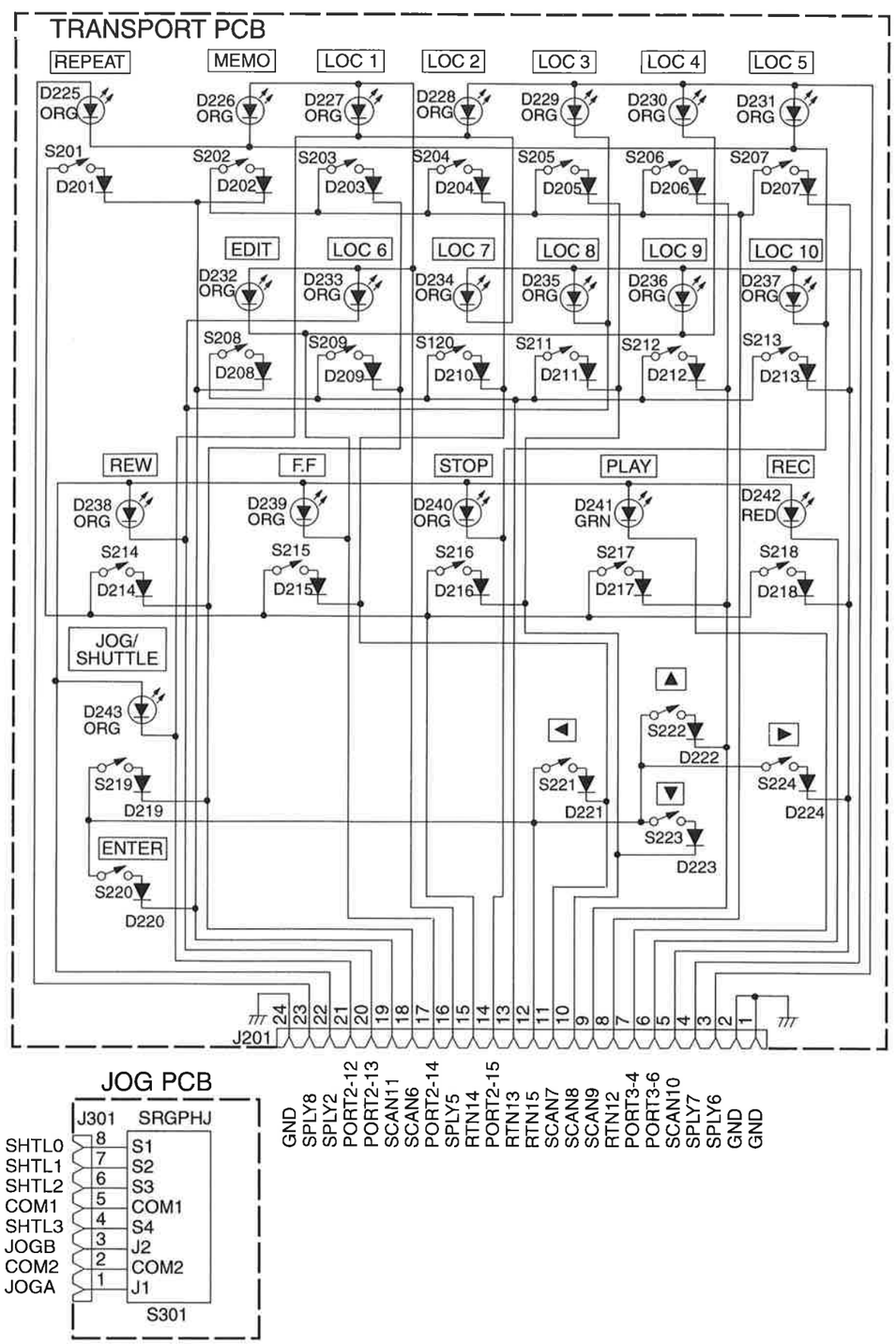

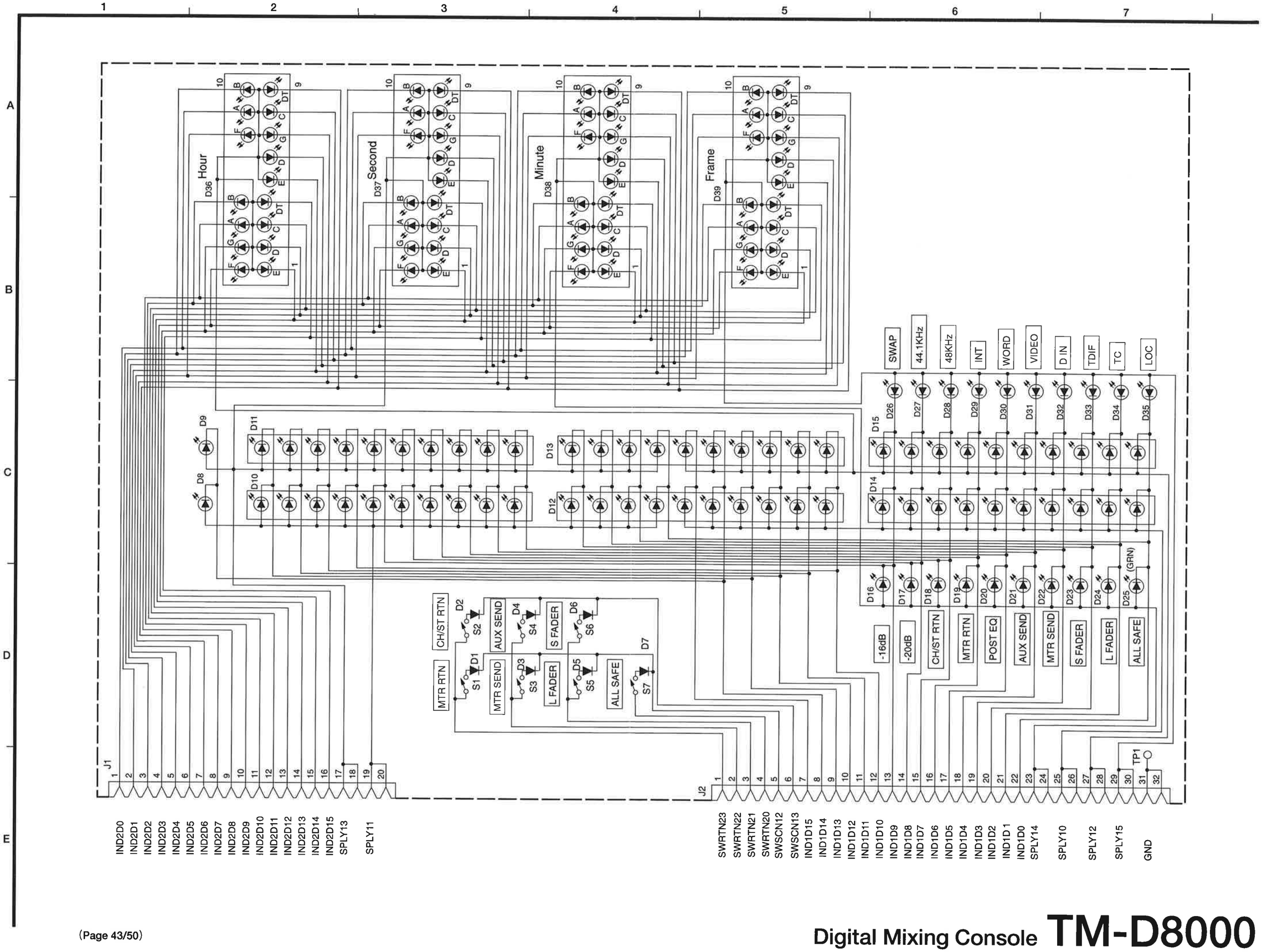
1
2
3
4
5
6
7
A
B
C
D
E
Hour
Second
Minute
Frame
D36
D37
D38
D39
SWAP
44.1KHz
48KHz
INT
WORD
VIDEO
D IN
TDIF
TC
LOC
D26
D27
D28
D29
D30
D31
D32
D33
D34
D35
D15
D14
D16
D17
D18
D19
D20
D21
D22
D23
D24
D25 (GRN)
-16dB
-20dB
CH/ST RTN
MTR RTN
POST EQ
AUX SEND
MTR SEND
S FADER
L FADER
ALL SAFE
D9
D8
D11
D10
D13
D12
CH/ST RTN
D2
S2
AUX SEND
D4
S4
S FADER
D6
S6
MTR RTN
D1
S1
MTR SEND
D3
S3
L FADER
D5
S5
ALL SAFE
D7
S7
J1
J2
TP1
IND2D0
IND2D1
IND2D2
IND2D3
IND2D4
IND2D5
IND2D6
IND2D7
IND2D8
IND2D9
IND2D10
IND2D11
IND2D12
IND2D13
IND2D14
IND2D15
SPLY13
SPLY11
SWRTN23
SWRTN22
SWRTN21
SWRTN20
SWSCN12
SWSCN13
IND1D15
IND1D14
IND1D13
IND1D12
IND1D11
IND1D10
IND1D9
IND1D8
IND1D7
IND1D6
IND1D5
IND1D4
IND1D3
IND1D2
IND1D 1
IND1D0
SPLY14
SPLY10
SPLY12
SPLY15
GND

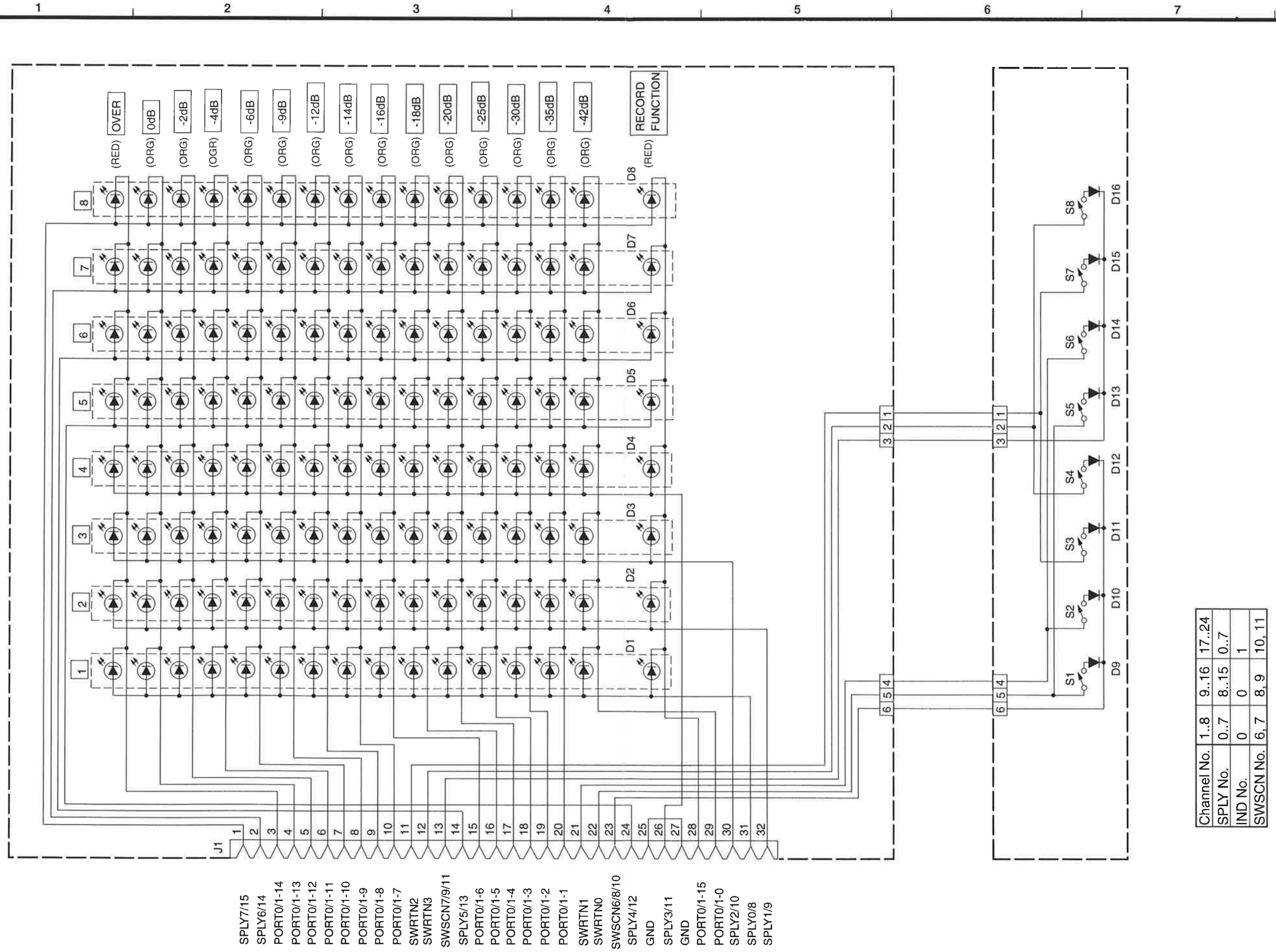

Channel No.	1..8	9..16	17..24
SPLY No.	0..7	8..15	0..7
IND No.	0	0	1
SWSCN No.	6, 7	8, 9	10, 11

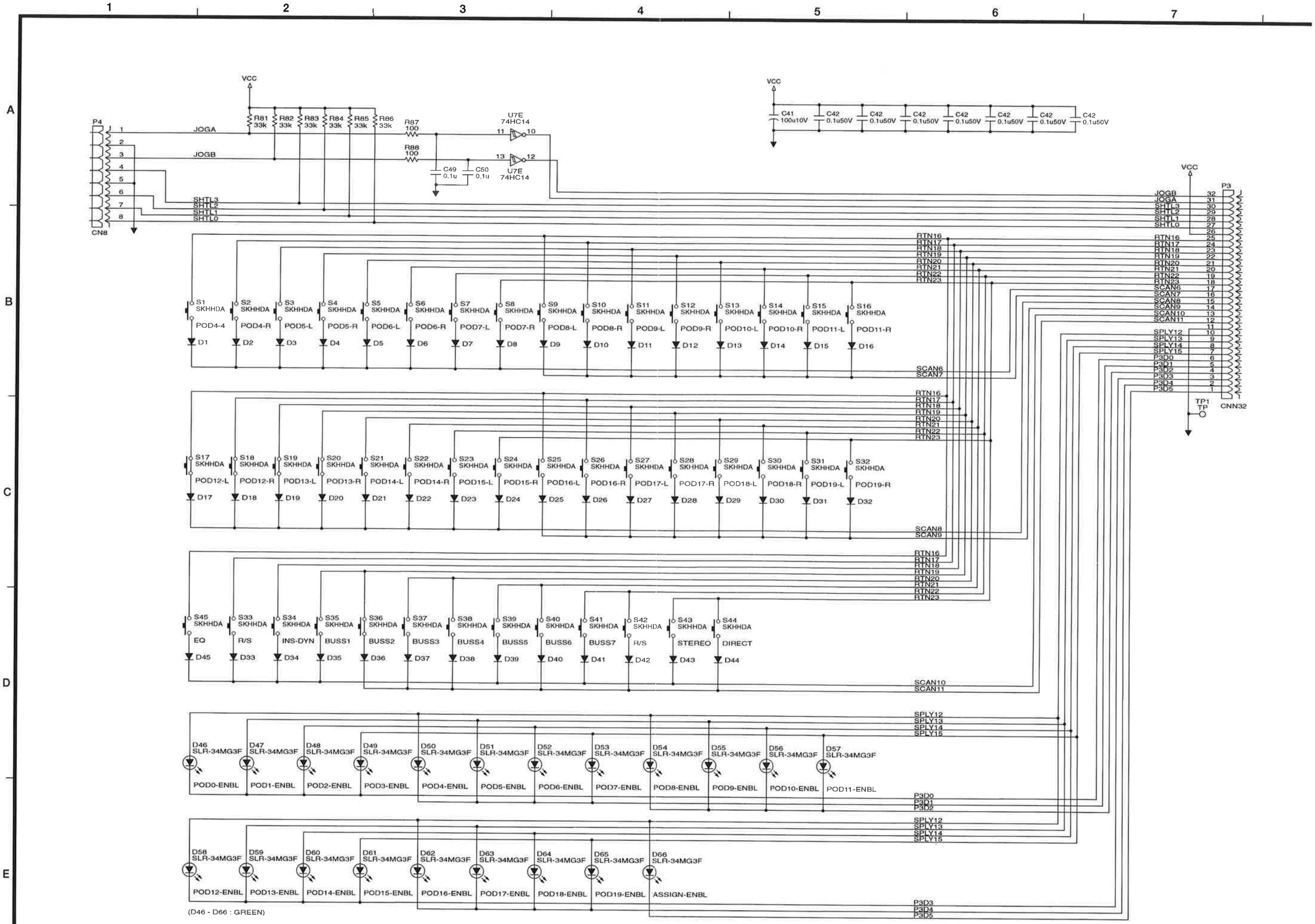
1
2
3
4
5
6
7
A
B
C
D
E
VCC
P4
CN8
JOGA
JOGB
SHTL3
SHTL2
SHTL1
SHTL0
R81 33k
R82 33k
R83 33k
R84 33k
R85 33k
R86 33k
R87 100
R88 100
C49 0.1u
C50 0.1u
U7E 74HC14
C41 100u10V
C42 0.1u50V
P3
CNN32
TP1 TP
RTN16
RTN17
RTN18
RTN19
RTN20
RTN21
RTN22
RTN23
SCAN6
SCAN7
SCAN8
SCAN9
SCAN10
SCAN11
SPLY12
SPLY13
SPLY14
SPLY15
P3D0
P3D1
P3D2
P3D3
P3D4
P3D5
S1 SKHHDA POD4-4 D1
S2 SKHHDA POD4-R D2
S3 SKHHDA POD5-L D3
S4 SKHHDA POD5-R D4
S5 SKHHDA POD6-L D5
S6 SKHHDA POD6-R D6
S7 SKHHDA POD7-L D7
S8 SKHHDA POD7-R D8
S9 SKHHDA POD8-L D9
S10 SKHHDA POD8-R D10
S11 SKHHDA POD9-L D11
S12 SKHHDA POD9-R D12
S13 SKHHDA POD10-L D13
S14 SKHHDA POD10-R D14
S15 SKHHDA POD11-L D15
S16 SKHHDA POD11-R D16
S17 SKHHDA POD12-L D17
S18 SKHHDA POD12-R D18
S19 SKHHDA POD13-L D19
S20 SKHHDA POD13-R D20
S21 SKHHDA POD14-L D21
S22 SKHHDA POD14-R D22
S23 SKHHDA POD15-L D23
S24 SKHHDA POD15-R D24
S25 SKHHDA POD16-L D25
S26 SKHHDA POD16-R D26
S27 SKHHDA POD17-L D27
S28 SKHHDA POD17-R D28
S29 SKHHDA POD18-L D29
S30 SKHHDA POD18-R D30
S31 SKHHDA POD19-L D31
S32 SKHHDA POD19-R D32
S45 SKHHDA EQ D45
S33 SKHHDA R/S D33
S34 SKHHDA INS-DYN D34
S35 SKHHDA BUSS1 D35
S36 SKHHDA BUSS2 D36
S37 SKHHDA BUSS3 D37
S38 SKHHDA BUSS4 D38
S39 SKHHDA BUSS5 D39
S40 SKHHDA BUSS6 D40
S41 SKHHDA BUSS7 D41
S42 SKHHDA R/S D42
S43 SKHHDA STEREO D43
S44 SKHHDA DIRECT D44
D46 SLR-34MG3F POD0-ENBL
D47 SLR-34MG3F POD1-ENBL
D48 SLR-34MG3F POD2-ENBL
D49 SLR-34MG3F POD3-ENBL
D50 SLR-34MG3F POD4-ENBL
D51 SLR-34MG3F POD5-ENBL
D52 SLR-34MG3F POD6-ENBL
D53 SLR-34MG3F POD7-ENBL
D54 SLR-34MG3F POD8-ENBL
D55 SLR-34MG3F POD9-ENBL
D56 SLR-34MG3F POD10-ENBL
D57 SLR-34MG3F POD11-ENBL
D58 SLR-34MG3F POD12-ENBL
D59 SLR-34MG3F POD13-ENBL
D60 SLR-34MG3F POD14-ENBL
D61 SLR-34MG3F POD15-ENBL
D62 SLR-34MG3F POD16-ENBL
D63 SLR-34MG3F POD17-ENBL
D64 SLR-34MG3F POD18-ENBL
D65 SLR-34MG3F POD19-ENBL
D66 SLR-34MG3F ASSIGN-ENBL
(D46 - D66 : GREEN)

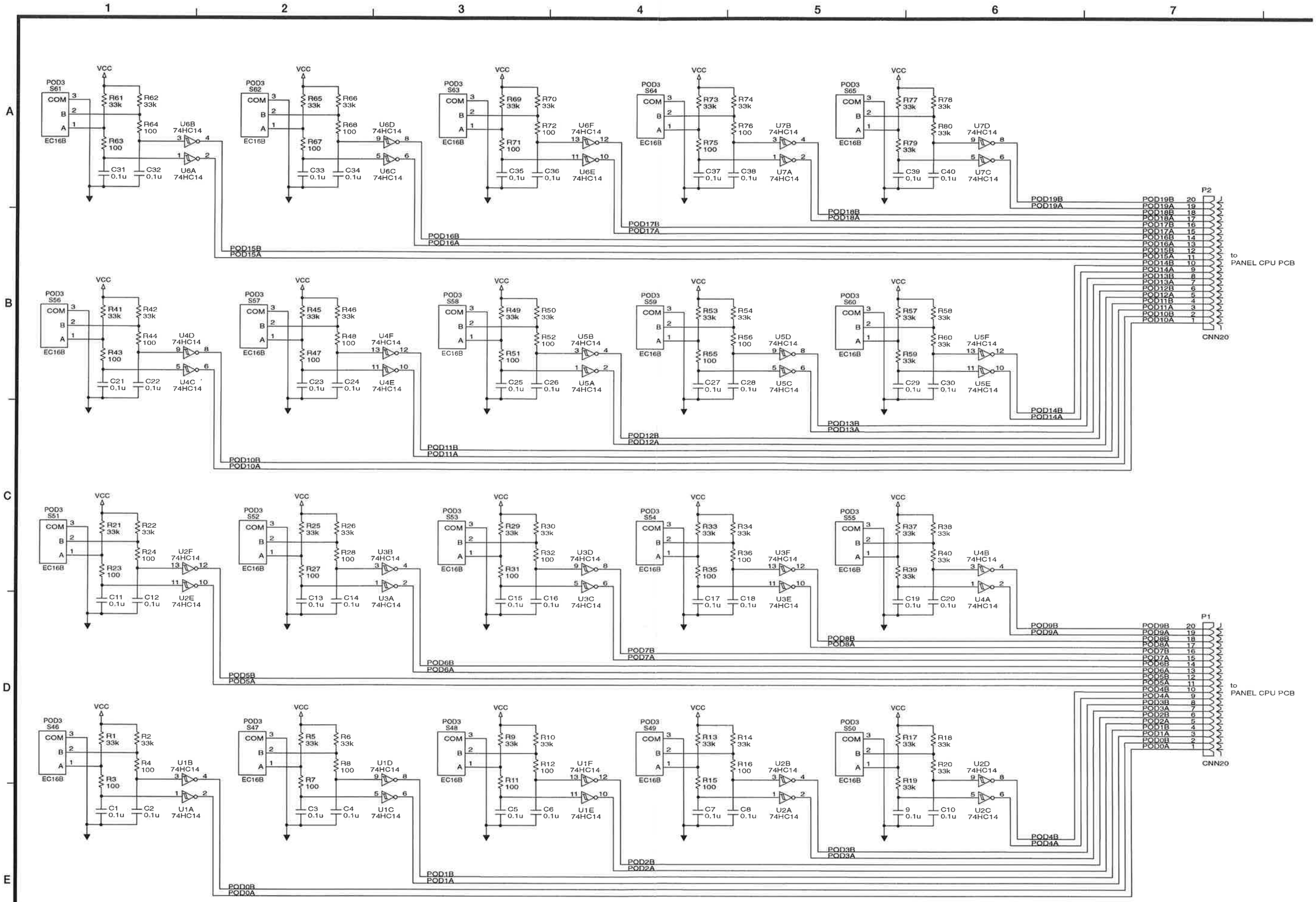
1
2
3
4
5
6
7
A
B
C
D
E
VCC
POD3
S61
S62
S63
S64
S65
S56
S57
S58
S59
S60
S51
S52
S53
S54
S55
S46
S47
S48
S49
S50
COM
B
A
EC16B
R61 33k
R62 33k
R63 100
R64 100
R65 33k
R66 33k
R67 100
R68 100
R69 33k
R70 33k
R71 100
R72 100
R73 33k
R74 33k
R75 100
R76 100
R77 33k
R78 33k
R79 33k
R80 33k
R41 33k
R42 33k
R43 100
R44 100
R45 33k
R46 33k
R47 100
R48 100
R49 33k
R50 33k
R51 100
R52 100
R53 33k
R54 33k
R55 100
R56 100
R57 33k
R58 33k
R59 33k
R60 33k
R21 33k
R22 33k
R23 100
R24 100
R25 33k
R26 33k
R27 100
R28 100
R29 33k
R30 33k
R31 100
R32 100
R33 33k
R34 33k
R35 100
R36 100
R37 33k
R38 33k
R39 33k
R40 33k
R1 33k
R2 33k
R3 100
R4 100
R5 33k
R6 33k
R7 100
R8 100
R9 33k
R10 33k
R11 100
R12 100
R13 33k
R14 33k
R15 100
R16 100
R17 33k
R18 33k
R19 33k
R20 33k
C31 0.1u
C32 0.1u
C33 0.1u
C34 0.1u
C35 0.1u
C36 0.1u
C37 0.1u
C38 0.1u
C39 0.1u
C40 0.1u
C21 0.1u
C22 0.1u
C23 0.1u
C24 0.1u
C25 0.1u
C26 0.1u
C27 0.1u
C28 0.1u
C29 0.1u
C30 0.1u
C11 0.1u
C12 0.1u
C13 0.1u
C14 0.1u
C15 0.1u
C16 0.1u
C17 0.1u
C18 0.1u
C19 0.1u
C20 0.1u
C1 0.1u
C2 0.1u
C3 0.1u
C4 0.1u
C5 0.1u
C6 0.1u
C7 0.1u
C8 0.1u
9 0.1u
C10 0.1u
U6B 74HC14
U6A 74HC14
U6D 74HC14
U6C 74HC14
U6F 74HC14
U6E 74HC14
U7B 74HC14
U7A 74HC14
U7D 74HC14
U7C 74HC14
U4D 74HC14
U4C 74HC14
U4F 74HC14
U4E 74HC14
U5B 74HC14
U5A 74HC14
U5D 74HC14
U5C 74HC14
U5F 74HC14
U5E 74HC14
U2F 74HC14
U2E 74HC14
U3B 74HC14
U3A 74HC14
U3D 74HC14
U3C 74HC14
U3F 74HC14
U3E 74HC14
U4B 74HC14
U4A 74HC14
U1B 74HC14
U1A 74HC14
U1D 74HC14
U1C 74HC14
U1F 74HC14
U1E 74HC14
U2B 74HC14
U2A 74HC14
U2D 74HC14
U2C 74HC14
U2F 74HC14
U2E 74HC14
POD19B
POD19A
POD18B
POD18A
POD17B
POD17A
POD16B
POD16A
POD15B
POD15A
POD14B
POD14A
POD13B
POD13A
POD12B
POD12A
POD11B
POD11A
POD10B
POD10A
POD9B
POD9A
POD8B
POD8A
POD7B
POD7A
POD6B
POD6A
POD5B
POD5A
POD4B
POD4A
POD3B
POD3A
POD2B
POD2A
POD1B
POD1A
POD0B
POD0A
P2
CNN20
to
PANEL CPU PCB
P1
CNN20
to
PANEL CPU PCB

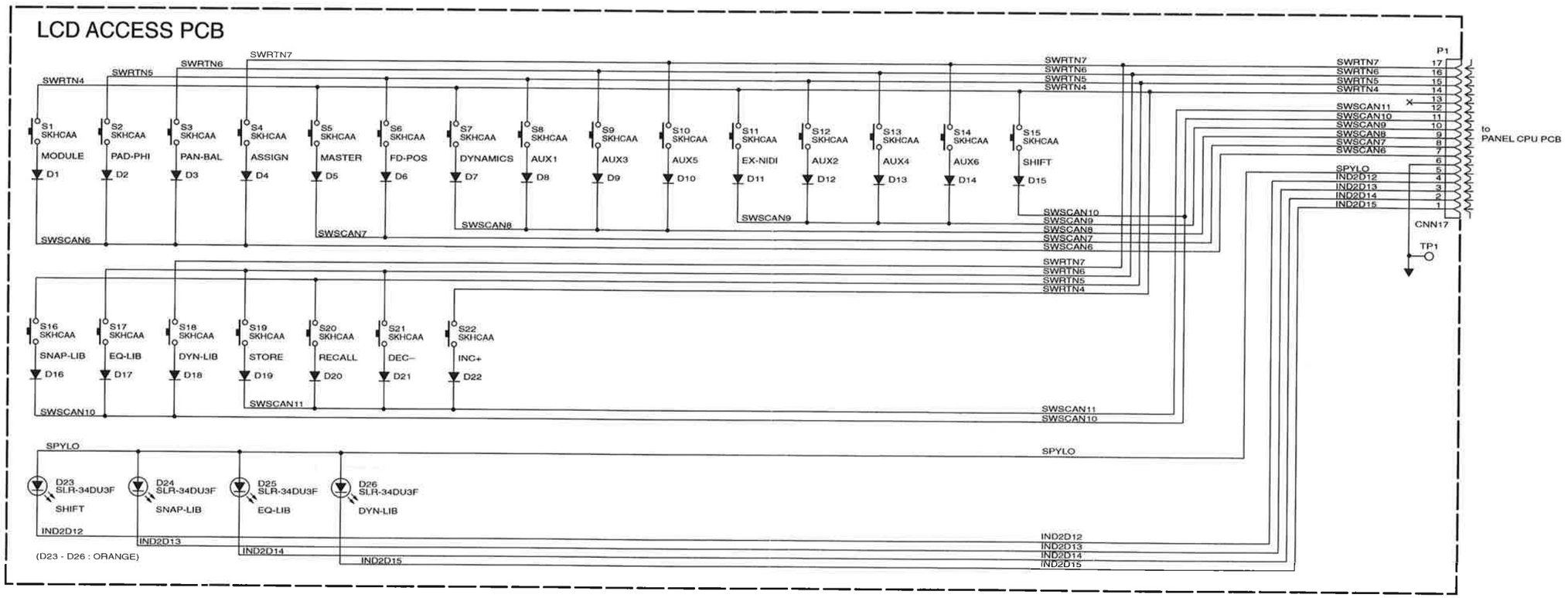
LCD ACCESS PCB
S1 SKHCAA MODULE D1
S2 SKHCAA PAD-PHI D2
S3 SKHCAA PAN-BAL D3
S4 SKHCAA ASSIGN D4
S5 SKHCAA MASTER D5
S6 SKHCAA FD-POS D6
S7 SKHCAA DYNAMICS D7
S8 SKHCAA AUX1 D8
S9 SKHCAA AUX3 D9
S10 SKHCAA AUX5 D10
S11 SKHCAA EX-NIDI D11
S12 SKHCAA AUX2 D12
S13 SKHCAA AUX4 D13
S14 SKHCAA AUX6 D14
S15 SKHCAA SHIFT D15
S16 SKHCAA SNAP-LIB D16
S17 SKHCAA EQ-LIB D17
S18 SKHCAA DYN-LIB D18
S19 SKHCAA STORE D19
S20 SKHCAA RECALL D20
S21 SKHCAA DEC– D21
S22 SKHCAA INC+ D22
D23 SLR-34DU3F SHIFT
D24 SLR-34DU3F SNAP-LIB
D25 SLR-34DU3F EQ-LIB
D26 SLR-34DU3F DYN-LIB
(D23 - D26 : ORANGE)
SWRTN4
SWRTN5
SWRTN6
SWRTN7
SWSCAN6
SWSCAN7
SWSCAN8
SWSCAN9
SWSCAN10
SWSCAN11
SPYLO
IND2D12
IND2D13
IND2D14
IND2D15
P1
CNN17
TP1
to PANEL CPU PCB

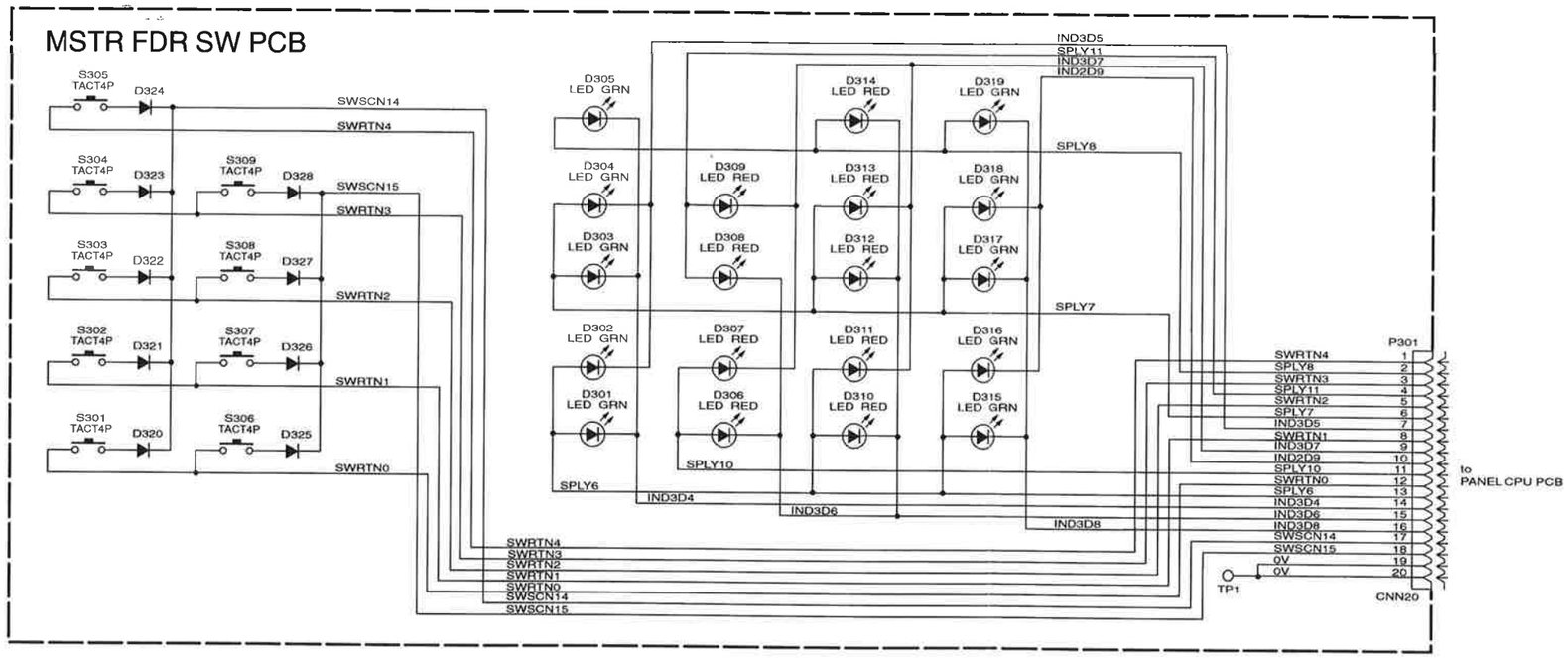
MSTR FDR SW PCB
S305 TACT4P D324
S304 TACT4P D323
S309 TACT4P D328
S303 TACT4P D322
S308 TACT4P D327
S302 TACT4P D321
S307 TACT4P D326
S301 TACT4P D320
S306 TACT4P D325
SWSCN14
SWSCN15
SWRTN0
SWRTN1
SWRTN2
SWRTN3
SWRTN4
D305 LED GRN
D304 LED GRN
D303 LED GRN
D302 LED GRN
D301 LED GRN
D309 LED RED
D308 LED RED
D307 LED RED
D306 LED RED
D314 LED RED
D313 LED RED
D312 LED RED
D311 LED RED
D310 LED RED
D319 LED GRN
D318 LED GRN
D317 LED GRN
D316 LED GRN
D315 LED GRN
IND3D5
SPLY11
IND3D7
IND2D9
SPLY6
SPLY7
SPLY10
IND3D4
IND3D6
IND3D8
P301
TP1
CNN20
to PANEL CPU PCB

MONITOR SW PCB

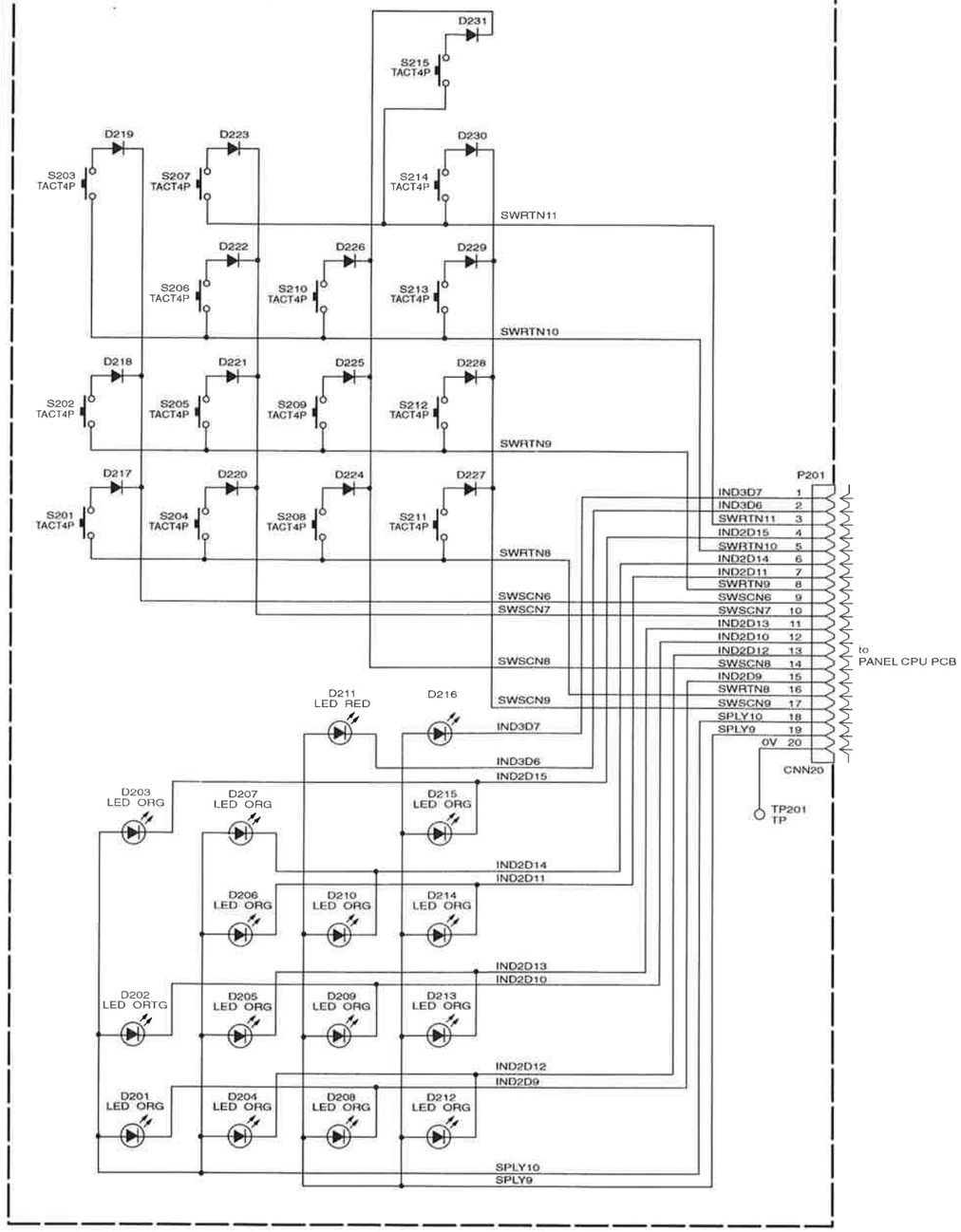

CUT GROUP PCB

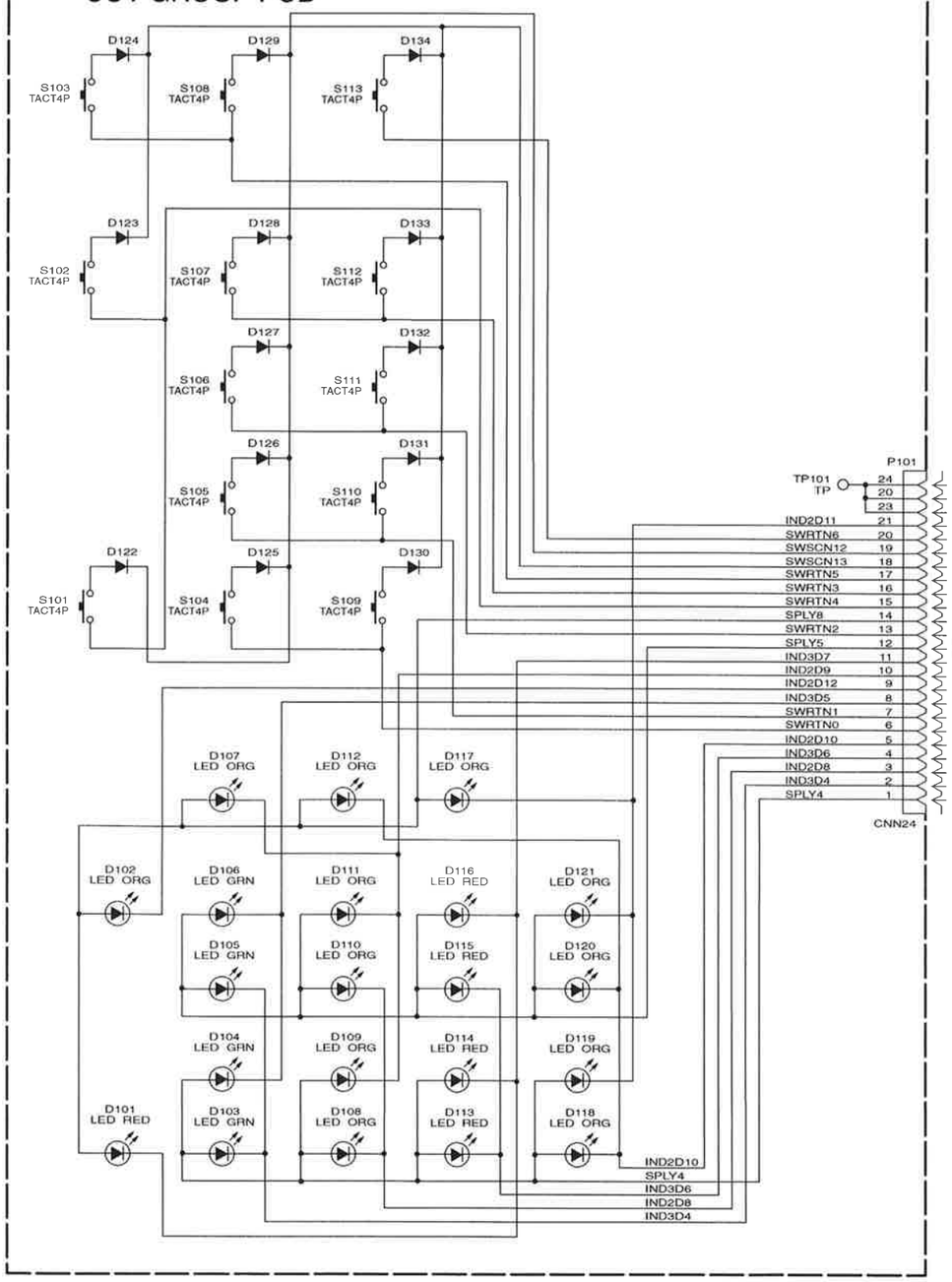

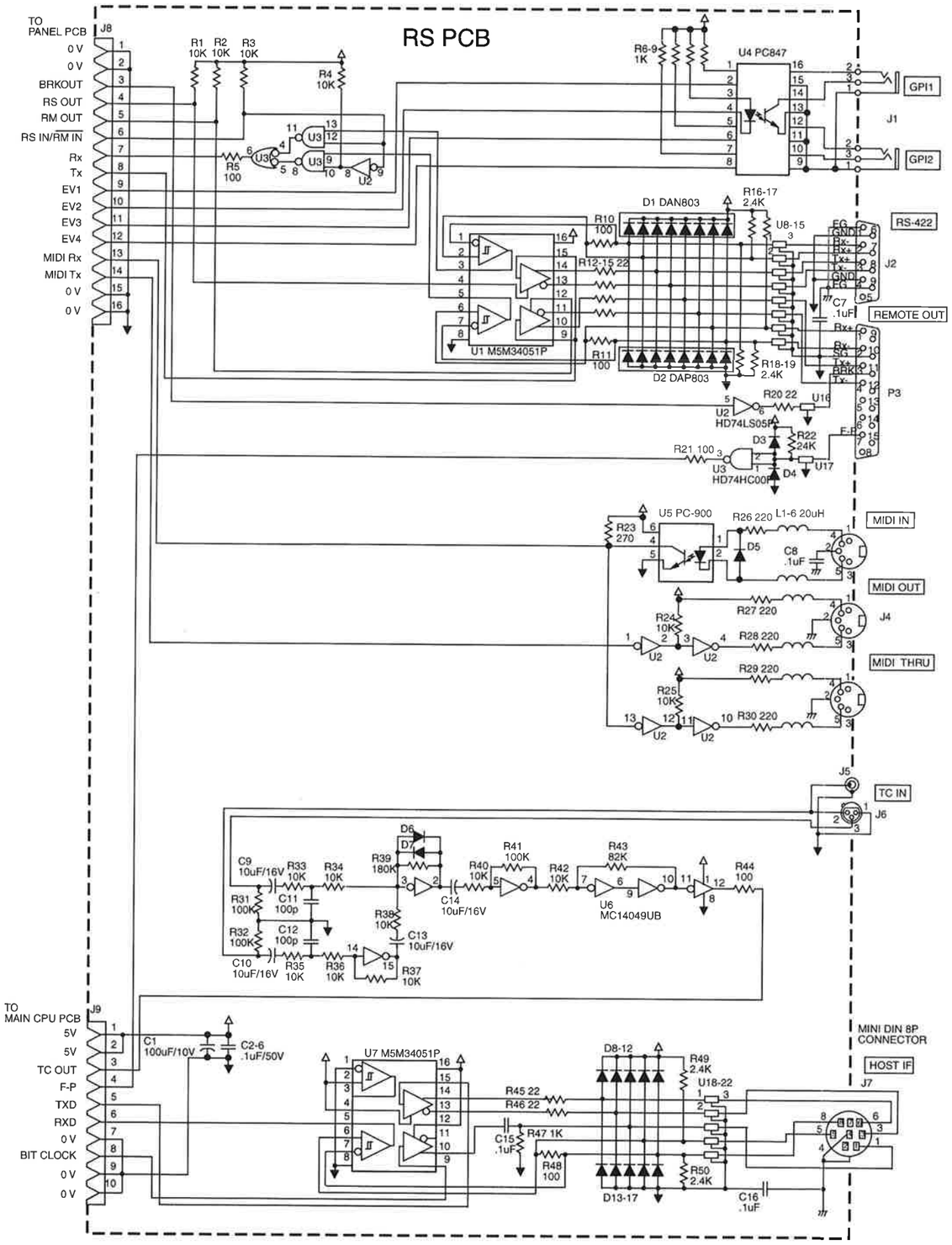

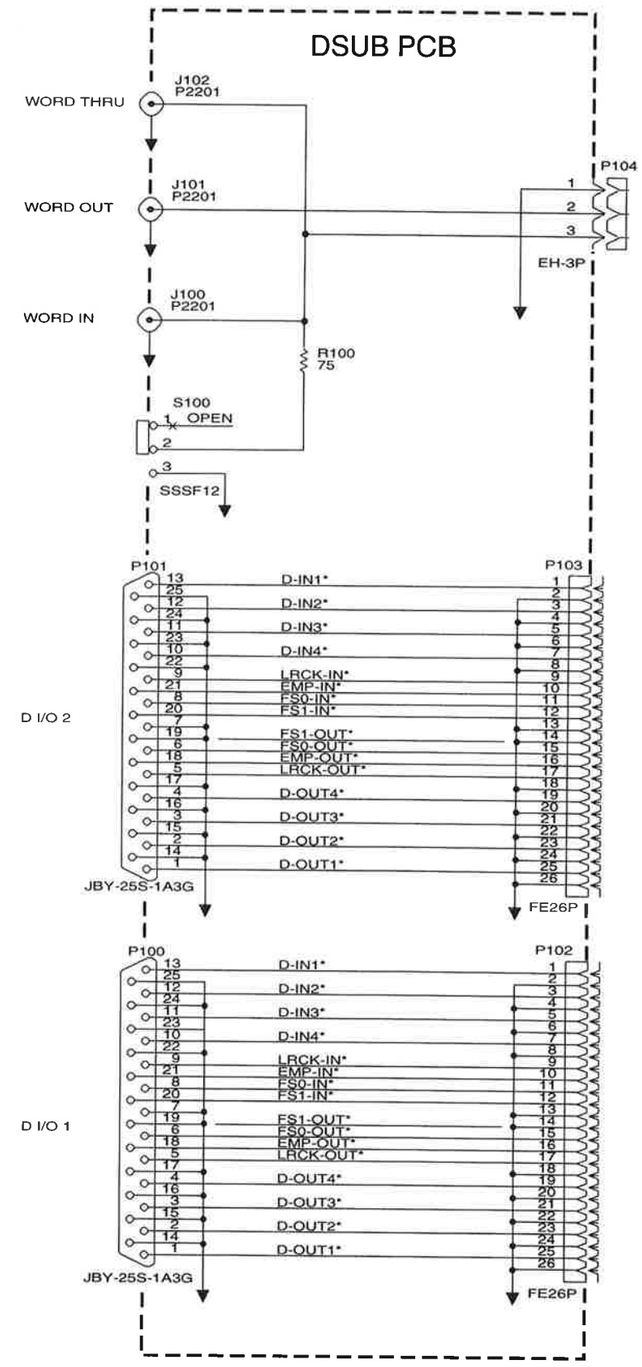

Digital Mixing Console **TM-D8000**

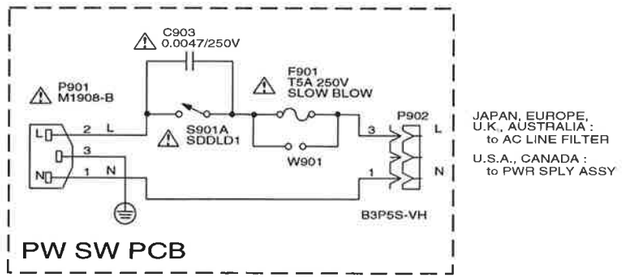

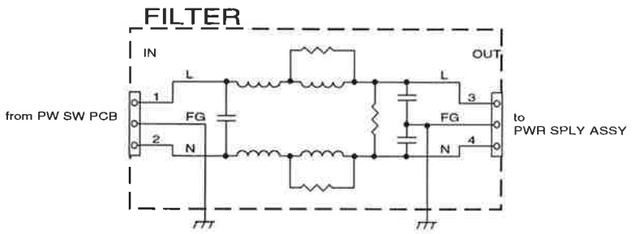

JAPAN : GF112R7
EUROPE, U.K., AUSTRALIA : GF121R0
U.S.A., CANADA : NONE

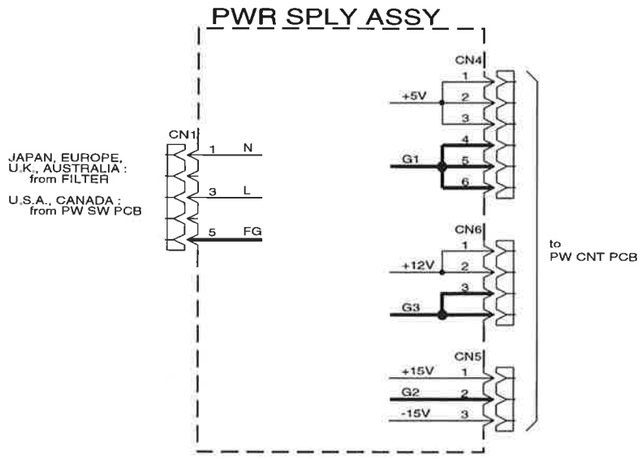

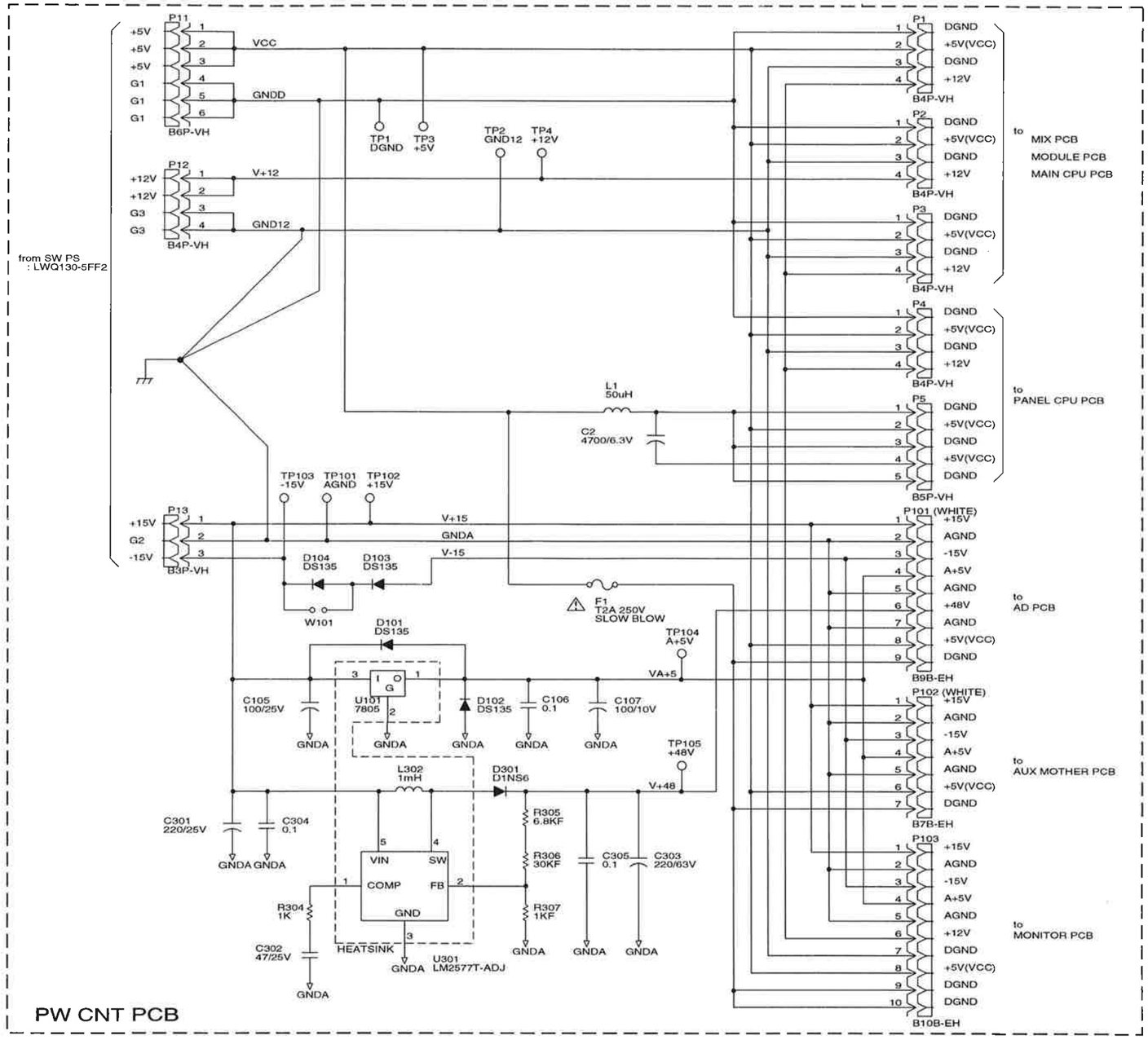

NOTE
⚠ Parts marked with this sign are safety critical components. They must be replaced with identical components - refer to the appropriate parts list and ensure exact replacement.

注意
⚠ マークのある部品は安全重要部品です。
交換するときは必ずティアック指定の部品を使用してください。