ORDER NO. EMID921396
A4

Service Manual

PCM Digital Ensemble

SX-PR370

(M), (MC), (XM), (EN), (EH), (EF), (EZ), (EW), (EA), (EP), (EK), (XL), (XR), (XS), (XD), (X), (XT)



AREAS

(M):	U.S.A.	(EK):	the United Kingdom
(MC):	Canada	(XL):	New Zealand
(XM):	Mexico	(XR):	Australia
(EN):	Norway, Sweden, Denmark, Finland	(XS):	Malaysia, Singapore, South Africa
(EH):	Holland	(XD):	Saudi Arabia, Kuwait
(EF):	France, Italy, Belgium	(X):	the Middle East, Indonesia, Hong Kong, the Philippines, Thailand,
(EZ):	Germany		
(EW):	Switzerland		
(EA):	Austria		
(EP):	Spain, Portugal, Greece	(XT):	Taiwan

■ Specifications

KEYBOARD		88 KEYS
SOUND GENERATOR		PCM
MAXIMUM NUMBER OF NOTES PRODUCED SIMULTANEOUSLY		32~16 NOTES
SOUND SELECT	PIANO	GRAND PIANO, UPRIGHT PIANO, E PIANO 1, E PIANO 2
		ROCK PIANO, HARPSI/HAWAII GTR, GUITAR, ELECTR GUITAR, MALLET, SPECIAL PERC, BRASS 1, BRASS 2, TRUMPET, SAX, REED, FLUTE/OBOE, ORGAN, STRINGS, SYNTH/VOCAL, ACOUSTIC BASS, ELECTRIC BASS, SPECIAL BASS (WITH 3 VARIATIONS FOR EACH SOUND)
KEY SPLIT		○ (G2, C3, C4)
PEDAL		SUSTAIN, SOSTENUTO, SOFT
EFFECT		○
DIGITAL REVERB		○ (ROOM, STAGE, HALL)
TRANSPOSE		○ (G~C~F♯)
RHYTHM	RHYTHM SELECT	MARCH, COUNTRY, WALTZ, BIG BAND, JAZZ COMBO, JAZZ BALLAD, TRAD JAZZ, JAZZ WALTZ, LATIN 1, LATIN 2, 8 BEAT 1, 8 BEAT 2, ROCK'N'ROLL, SHUFFLE, ROCK BALLAD, 16 BEAT 1, 16 BEAT 2, JAZZ ROCK, DISCO, LATIN ROCK (WITH 3 VARIATIONS FOR EACH SOUND)
	CONTROL	START/STOP, SYNCHRO START, COUNT & FILL IN, INTRO & ENDING, TEMPO
	KEYBOARD PERCUSSION	44 KEYS
METRONOME		○ (1, 2)
ONE TOUCH PLAY/ MUSIC STYLE SELECT		○
AUTO PLAY CHORD		BASIC SPLIT, ADVANCED SPLIT, PIANIST, ACCOMP PART 1, 2, 3
DYNAMIC ACCOMP		○
PANEL MEMORY		SET, 1~6
SEQUENCER		STORAGE CAPACITY: APPROX 7400 NOTES, 8 PARTS (RIGHT, LEFT, BASS, ACCOMP/CHORD 1, ACCOMP 2, 3, DRUMS, CONTROL) INPUT MODES: REAL TIME, STEP (CHORD ONLY) EDIT FUNCTIONS: TRACK CLEAR, SONG CLEAR
COMPOSER		STORAGE CAPACITY: APPROX 1300 NOTES, 5 PARTS (BASS, ACCOMP 1, 2, 3, DRUMS), MEMORY: 1~8 EDIT FUNCTIONS: COMPOSER CLEAR, BEAT, QUANTIZE, PERC ERASE (DRUMS ONLY)
DISPLAY		○
DEMO		○
CONTROL		MAIN VOLUME, BALANCE, TRANSPOSE/PROGRAM
TUNING		○
MIDI		CHANNEL, OCTAVE SHIFT, LOCAL CONTROL, P. MEM P-CHANGE, START/STOP, MIDI CLOCK, SONG SELECT, MIDI LOAD, INPUT MODE, P. CHANGE MODE, NOTE ONLY, MIDI OUT, EXT. SEQ. MODE, PITCH BEND RANGE
OTHERS		OCTAVE SHIFT, REVERB DEPTH, ACCOMP VOLUME, PIANO TUNING, TOUCH SENSITIVITY, PEDAL SETTING, P. MEM EXPAND, MIN RANGE, MEDLEY, DISK FORMAT, INITIAL

Technics

EXTERNAL MEMORY	DIGITAL DISK RECORDER
TERMINALS	HEADPHONE TERMINALS × 2, LINE OUT, AUX IN, MIDI (IN, THRU, OUT), MIC
OUTPUT	50 W × 2
SPEAKERS	16 cm × 2, 6.5 cm × 2, MONITOR SPEAKER × 2
POWER REQUIREMENT	275 W, 290 VA (CANADA), 195 W (U.S.A. AND MEXICO)
	AC120/220/240 V 50/60 Hz AC120 V 60 Hz (NORTH AMERICA AND MEXICO) AC230 V 50/60 Hz (NEW ZEALAND AND EUROPE EXCEPT FOR UNITED KINGDOM)
DIMENSIONS (W×H×D)	145.3 cm × 103.8 cm × 59.3 cm (57-7/32" × 40-7/8"× 23-11/32")
NET WEIGHT	84 kg (185.2 lbs.)
ACCESSORIES	STAND, AC CORD

* Specifications are suject to change without notice for further improvement.

CONTENTS

■ **PART I (INTRODUCTION)**

SAFETY PRECAUTION I-1
HOW TO ASSEMBLE THE PIANO I-2
KEYBOARD RANGES I-3
OPTIONS I-3
ARRANGEMENT OF CONTROL PANEL I-4
BASIC FUNCTIONS I-4
TERMINALS I-6
PARTS LOCATION I-7
DISASSEMBLY INSTRUCTIONS I-8
SYMPTOMS WHICH APPEAR TO BE SIGNS OF TROUBLE I-11
ERROR DISPLAY I-13
ABOUT THE SELF-DIAGNOSTIC FUNCTION I-14
MIDI IMPLEMENTATION CHART I-16
PRECAUTIONS BEFORE SERVICING I-18

■ **PART II (SCHEMATIC DIAGRAM)**

WIRING CONNECTION DIAGRAM II-1
BLOCK DIAGRAM II-3
MAIN JACK MAIN AND JACK CIRCUIT DIAGRAM ... II-6
MAIN JACK MAIN AND JACK CIRCUIT BOARD II-9
AS TCF MIC HP AMP & POWER SUPPLY, TRANSFORMER & FUSE, MICROPHONE, HEADPHONE CIRCUIT BOARD II-12
AS TCF MIC HP AMP & POWER SUPPLY, TRANFORMER & FUSE, MICROPHONE, HEADPHONE CIRCUIT DIAGRAM II-15
CPL CPR CONTROL PANEL LEFT AND RIGHT CIRCUIT BOARD II-18
CPL CPR CONTROL PANEL LEFT AND RIGHT CIRCUIT DIAGRAM II-21
CPSQ SEQUENCER CONTROL CIRCUIT II-24
FDCN FDC FD CONNECTOR AND FD CONTROL CIRCUIT II-27
MKB1 MKB2 MANUAL KEYBOARD 1 AND 2 CIRCUIT II-30

■ **PART III (REPLACEMENT PARTS LIST)**

REPLACEMENT PARTS LIST (P.C.B. and Wiring Parts) III-1
PACKING III-8
CABINET PARTS LOCATION III-9
REPLACEMENT PARTS LIST (Cabinet and Chassis Parts) III-11

SAFETY PRECAUTION (This "safety precaution" is for the U.S.A. only)

• Safety Precaution

1. Before servicing, unplug the power cord to prevent an electric shock.
2. When replacing parts, use only the manufacturer's recommended components for safety.
3. Check the condition of the power cord. Replace if wear or damage is evident.
4. After servicing, be sure to restore the lead dress, insulation barriers, insulation papers, shields, etc.
5. Before returning the serviced equipment to the customer, be sure to make the following insulation resistance test to prevent the customer from being exposed to a shock hazard.

• Insulation Resistance Test

1. Unplug the power cord and short the two prongs of the plug with a jumper wire.
2. Turn on the power switch.
3. Measure the resistance value with an ohmmeter between the jumpered AC plug and each exposed metal cabinet part, such as screw heads, connectors, control shafts, handle brackets, etc. Measurements should range from 4 MΩ to infinity for all exposed parts.

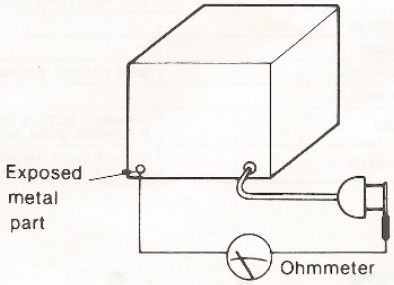

Resistance = 4 MΩ to ∞

HOW TO ASSEMBLE THE PIANO

1 Assemble the side planks and the speaker box using the 8 long brown screws.

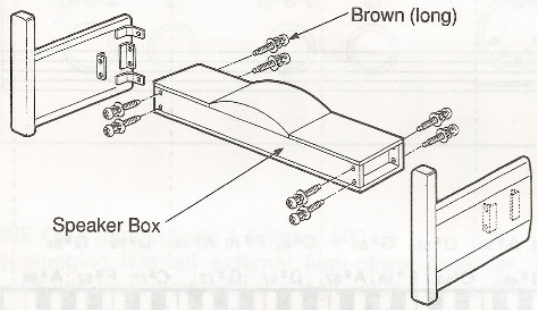

[Fig. 1]

2 Assemble the pedal box and the back plank using the 1 long black screw and 2 short black screws.

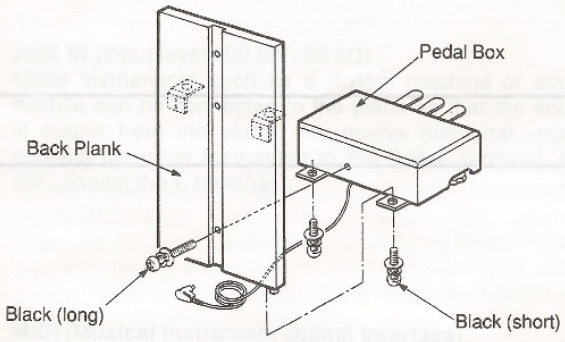

[Fig. 2]

3 Place the stand upright and attach the pedal unit to speaker box with 2 short brown screws and 2 long black screws, and then set the pedal cord cover in the groove.

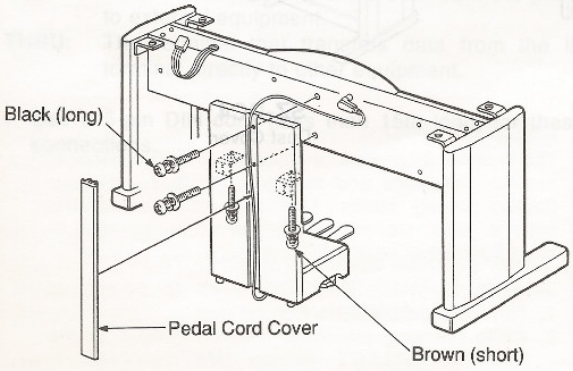

[Fig. 3]

4 Place the piano unit on the stand and secure it to the stand with 4 long brown screws.

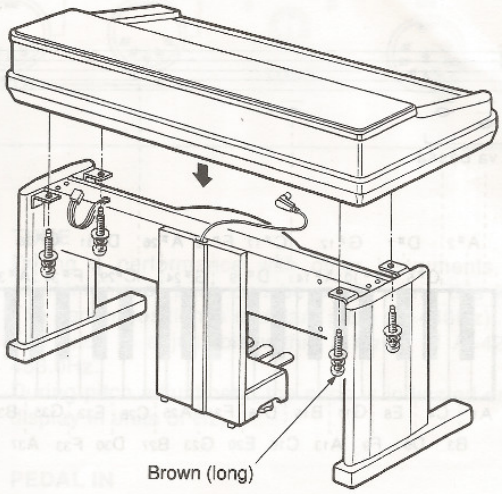

[Fig. 4]

5 Use the adjuster to make the pedal unit secure. Connect the pedal cord and speaker cord to their respective sockets located on the rear of the piano unit as shown below.

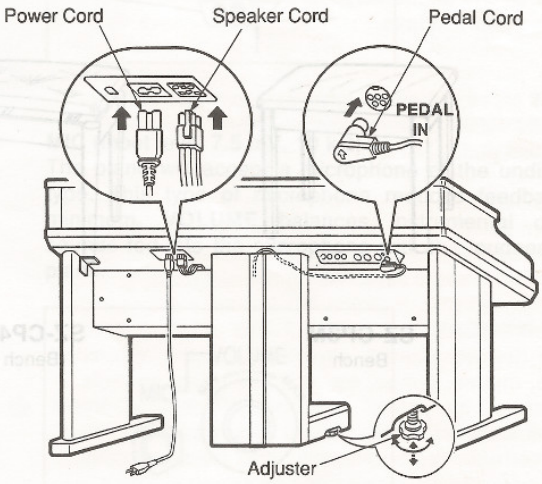

[Fig. 5]

KEYBOARD RANGES

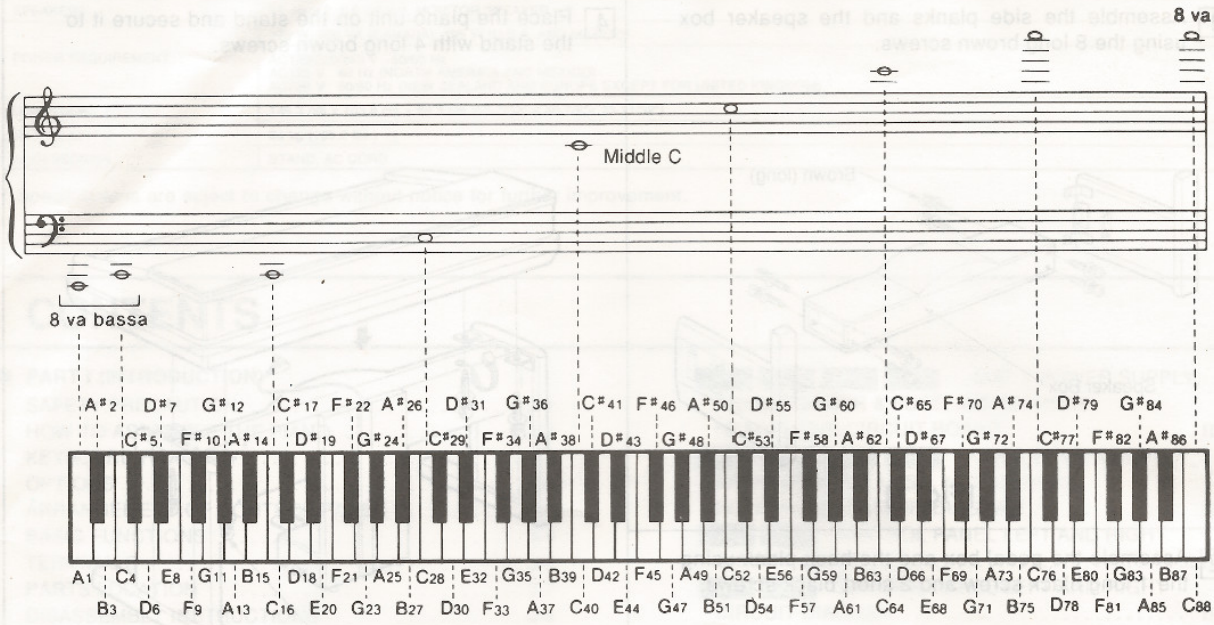

OPTIONS



SZ-CP3M
Bench



SZ-CP4M
Bench

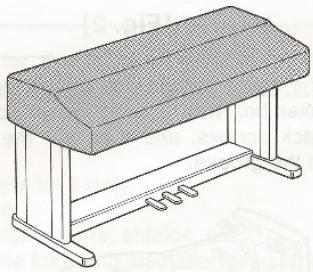

SZ-DC4
Dust Cover

ARRANGEMENT OF CONTROL PANEL

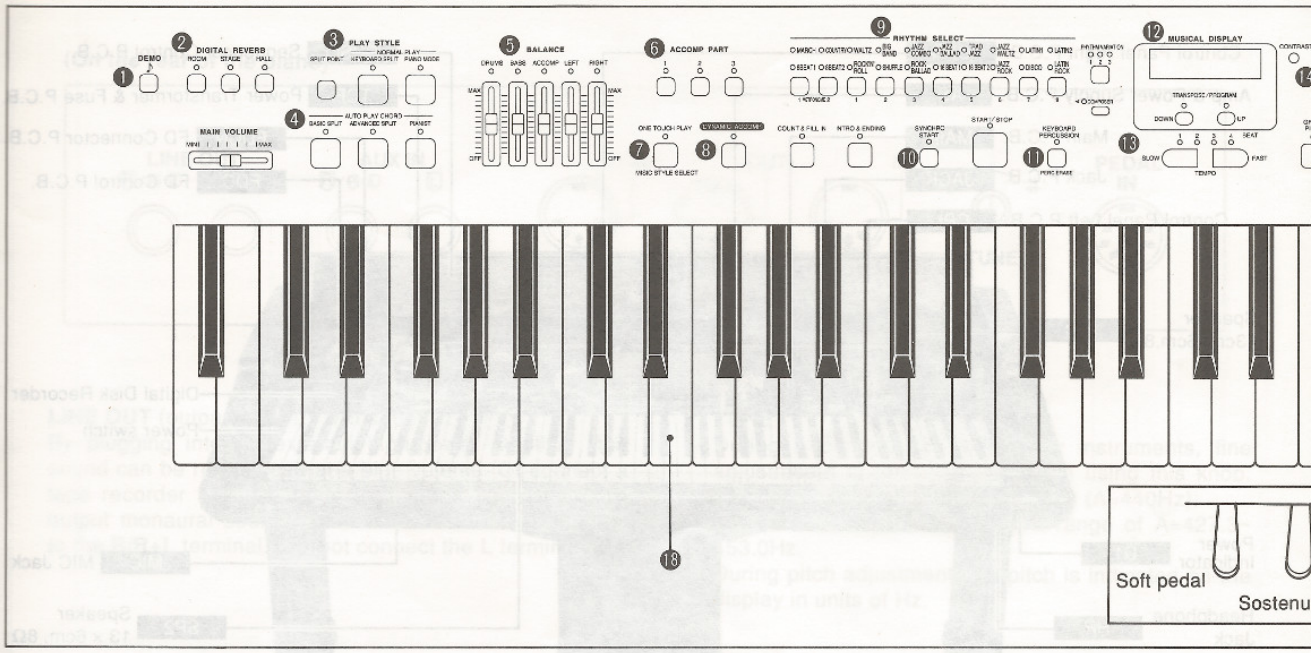

BASIC FUNCTIONS

❶ **DEMO ♪**
Listen to programmed demonstration tunes which impart the charm of individual sounds and rhythm patterns.

❷ **DIGITAL REVERB**
Select from three reverberation effects—**ROOM**, **STAGE** and **HALL**—to apply to the sound.

❸ **PLAY STYLE**
When playing as a piano, select either a conventional keyboard or a split keyboard. The location of the split point can be set at G2, C3 or G3 with the **SPLIT POINT** button.

❹ **AUTO PLAY CHORD**
When you play a chord on the keyboard, an accompaniment pattern which matches the selected rhythm is automatically produced. Select from three modes, according to your level of expertise.

❺ **BALANCE**
The volumes for the **DRUMS**, **BASS**, **ACCOMP**, **LEFT** and **RIGHT** parts are adjusted with their respective **BALANCE** controls.

❻ **ACCOMP PART**
The **AUTO PLAY CHORD** automatic accompaniment is comprised of three **ACCOMP** parts—**1**, **2** and **3**—which you can turn on and off individually.

❼ **ONE TOUCH PLAY/MUSIC STYLE SELECT**
This special feature allows you to easily set all the panel settings, including sounds and effects, in just seconds.

❽ **DYNAMIC ACCOMP**
The patterns in the automatic accompaniment change automatically conforming to the condition of the performance.

❾ **RHYTHM SELECT**
Various automatic rhythm patterns are stored in the permanent memory, for each of which has 3 variations to choose from. Two **METRONOME** types are also available.

❿ **Rhythm control**
The **COUNT & FILL IN** button is used to begin with a one-measure count or to insert a fill-in pattern during the rhythm performance. Use the **INTRO & ENDING** button to start a song with an intro pattern or finish with an ending pattern. **START/STOP** is used to start and stop the rhythm instantly. Or turn on the **SYNCHRO START** button to start the rhythm by pressing a key on the left side of the keyboard. Regulate the speed of the automatic rhythm with the **TEMPO** buttons. **BEAT** indicators light to show the beat.

⓫ **KEYBOARD PERCUSSION**
One press of the **KEYBOARD PERCUSSION** button transforms your keyboard into a whole band of percussive instruments and special sounds. The keys are picture-coded for quick and easy selection.

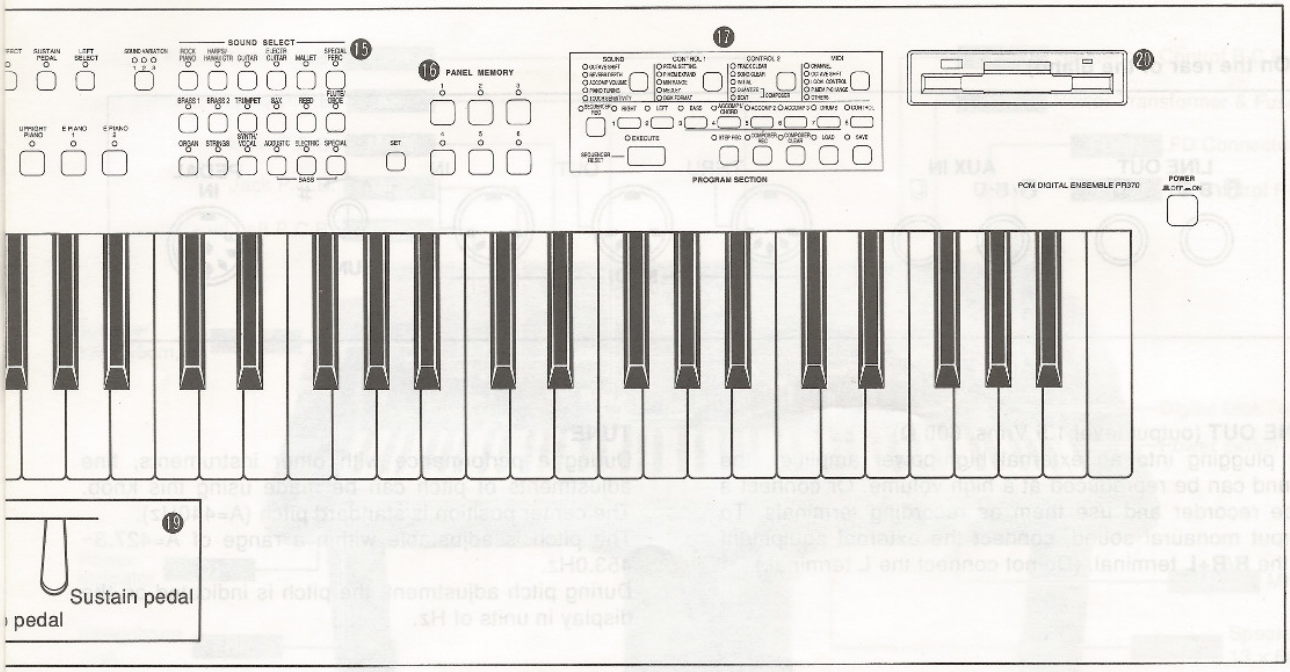

⑫ MUSICAL DISPLAY
During the normal performance mode, the selected rhythm, selected sound and tempo are displayed. When setting the functions for the **COMPOSER**, MIDI and others, the relevant information is displayed.

⑬ TRANSPOSE
C is the standard setting, but you can raise or lower the key of the entire keyboard in semi-tone steps across an entire octave.

⑭ Effects
EFFECT gives the sound greater depth and breadth. **SUSTAIN PEDAL** enables or disables operation of the sustain pedal.

⑮ SOUND SELECT
You can select from 4 different piano sounds. Or choose from 15 poly-type sounds and 3 bass sounds, each of which has 3 variations to choose from.

⑯ PANEL MEMORY
Set the desired sounds, effects, split point, volume settings, rhythm, tempo, etc. with the panel controls. Then store the panel settings in one of the programmable memories. Then while you play, the touch of one button recalls the panel settings instantly.

⑰ PROGRAM SECTION
Open the sliding cover to use the multi-purpose **PROGRAM SECTION**. These buttons are used when setting the functions for the **SEQUENCER**, **COMPOSER** or MIDI, when using some of the Digital Disk Recorder functions, and when custom-setting any of the numerous programmable functions.

⑱ Keyboard
This keyboard features Touch Response, by which you control the volume by playing the keys harder or softer.

⑲ Pedals
The sustain pedal and sostenuto pedal apply sustain effects, and the soft pedal works as a damper.

⑳ Digital Disk Recorder
The Digital Disk Recorder allows you to store up to 20 performances on a memory disk.

Initialization

The following procedure resets all programmable settings, functions and memories to their initialized (factory-preset) status. Use this procedure if the buttons, keys, etc. malfunction, or when you wish to reset the memories and functions.

<Procedure>
1. Turn off the **POWER** button.
2. While pressing the three leftmost buttons in the **RHYTHM SELECT** section (**METRONOME 1**, **METRONOME 2** and **1**) at the same time, turn the **POWER** button on again.

TERMINALS

(On the rear of the piano)

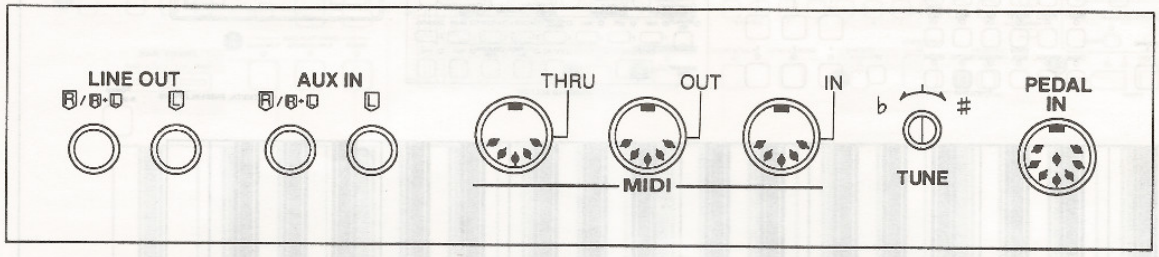

LINE OUT (output level 1.5 Vrms, 600 Ω)
By plugging into an external high-power amplifier, the sound can be reproduced at a high volume. Or connect a tape recorder and use them as recording terminals. To output monaural sound, connect the external equipment to the **R/R+L** terminal. (Do not connect the **L** terminal.)

AUX IN (input level 500 mV, 33 kΩ)
Other instruments such as a rhythm machine or sound module can be connected to the piano so that the sound is output from the piano. To receive monaural sound, connect the other instrument to the **R/R+L** terminal. (Do not connect the **L** terminal.)

MIDI (Musical Instrument Digital Interface)
MIDI is the standard specification that enables connection to equipment such as synthesizers and personal computers. Data transmission and reception are possible between the Technics Digital Ensemble and instruments provided with MIDI terminals.

IN: The terminal that receives data from external equipment.
OUT: The terminal that transmits data from the piano to external equipment.
THRU: The terminal that transfers data from the IN terminal directly to other equipment.

- Use a 5-pin DIN cord (less than 15m long) for these connections.

TUNE
During a performance with other instruments, fine adjustments of pitch can be made using this knob. The center position is standard pitch (A=440Hz).
The pitch is adjustable within a range of A=427.3~453.0Hz.
During pitch adjustment, the pitch is indicated on the display in units of Hz.

PEDAL IN
Connect the cord from the included stand to this terminal.

PHONES (∩) ×2
For silent practice headphones may be used. When plugged in, the speaker system is automatically switched off, and sound is heard only through the headphones.

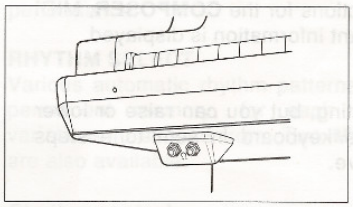

MIC (input level 7.5 mV, 10 kΩ)
The piano will accept a microphone of the undirectional type. This type of microphone reduces feedback to a minimum. **VOLUME** balances instrumental or vocal sounds fed into the microphone with the loudness of the piano.

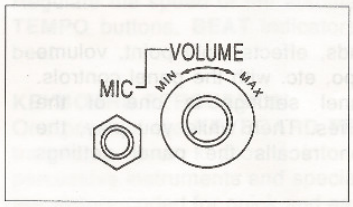

(Below the keyboard)

PARTS LOCATION

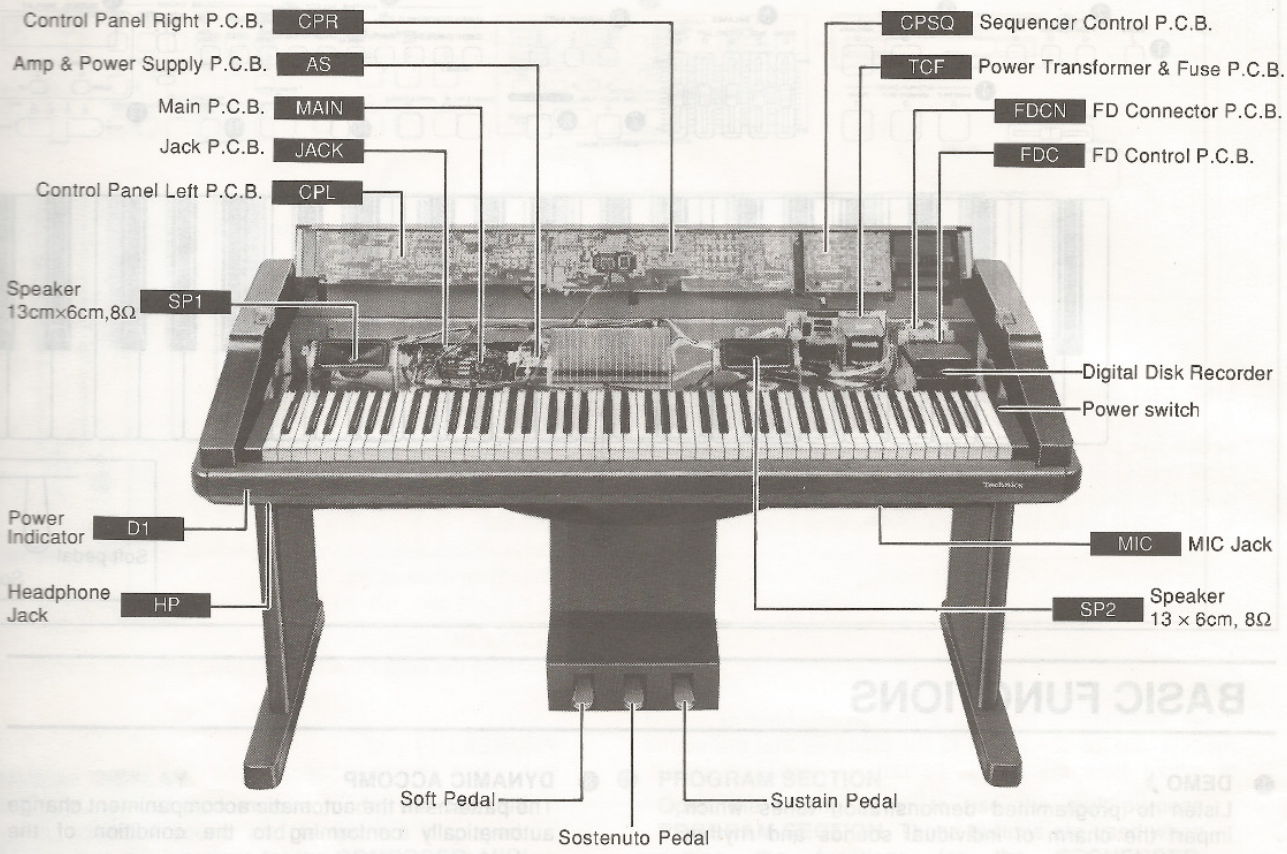

[Photo-1]

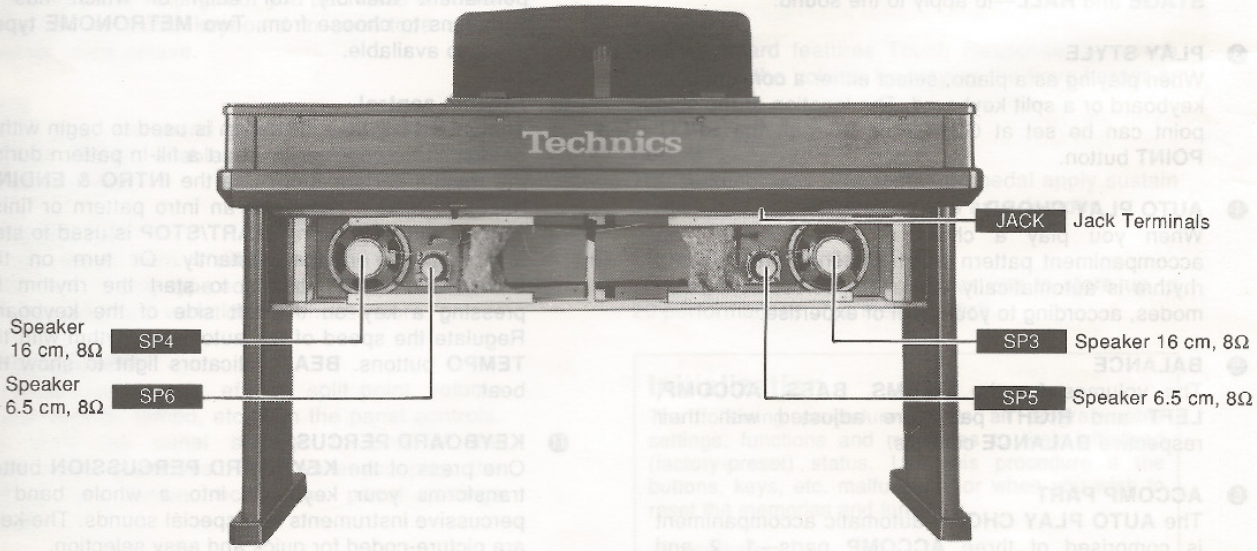

[Photo-2]

DISASSEMBLY INSTRUCTIONS

1 Removing the top cover

1. Remove the top cover affixing screws (Ⓐ 4 pcs.).
2. Slide the top cover forward and lift up (as shown by the arrows).

2 Removing the keyboard cover

1. Remove the top cover (see Step 1).
2. Remove the screws from the keyboard cover guide rails (1 screw each on left and right ends).
3. Match the gears of the keyboard cover with the notches in the guide rail, and lift up the keyboard cover.

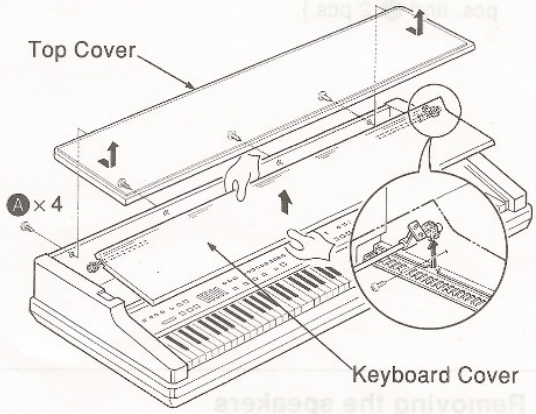

[Fig.6]

3 Removing the control panel

1. Remove the keyboard cover (see Step 2).
2. Remove the control panel affixing screws (Ⓑ 5 pcs.).
3. Remove the control panel as shown in Figure 7.

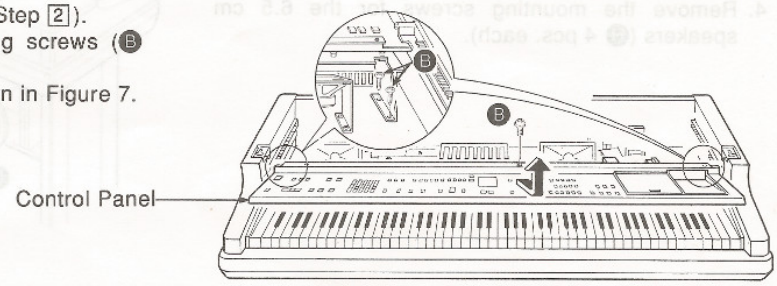

[Fig.7]

4 Removing the keyboard assembly

1. Remove the control panel (see Step 3).
2. Remove the keyboard assembly affixing screws located on the bottom of the cabinet (Ⓒ 7 pcs.).
3. Remove the keyboard assembly as shown in figure 8.

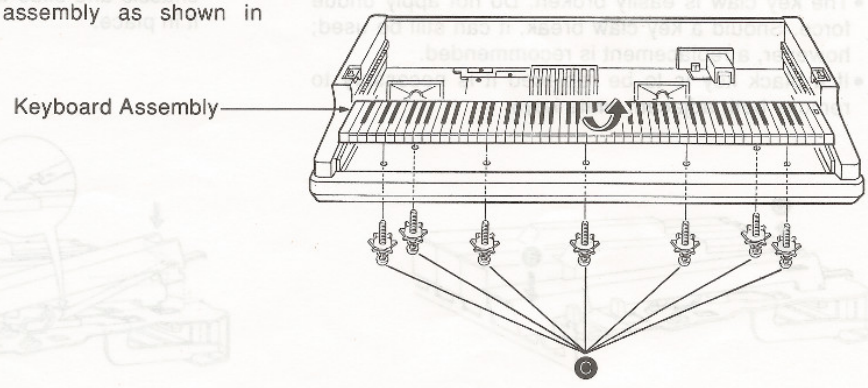

[Fig. 8]

5 Removing the pedal assembly

1. Remove the pedal cord cover.
2. Remove the pedal assembly affixing screws (Ⓓ 2 pcs. and Ⓔ 2 pcs.).

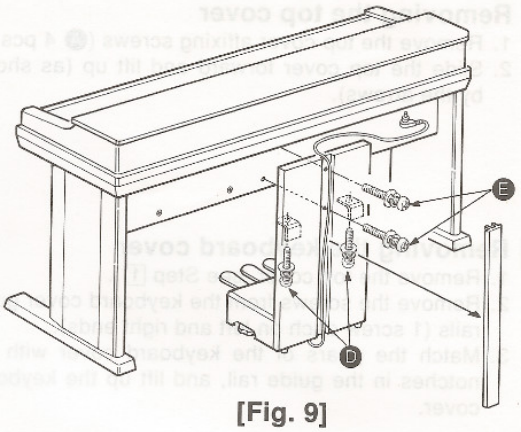

[Fig. 9]

6 Removing the speakers

1. Remove the pedal assembly (see Step 5).
2. Remove the mounting screws for the rear board of the speaker box (Ⓕ 10 pcs.).
3. Remove the mounting nuts for the 16 cm speakers (Ⓖ 4 pcs. each).
4. Remove the mounting screws for the 6.5 cm speakers (Ⓗ 4 pcs. each).

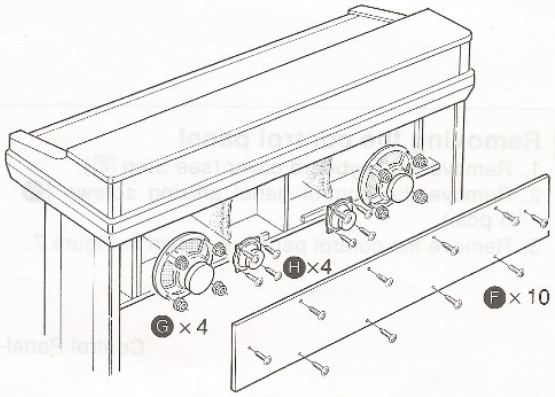

[Fig. 10]

7 Key(s)

Disassembly

1. Remove the keyboard assembly (see Step 4).
2. To release the key claw.
   ⓐ Press the front of the key downward slightly.
   ⓑ Press the rear of the key forward gently.
3. To remove the key, lift as shown in Figure 11.

NOTE:

- The key claw is easily broken. Do not apply undue force. Should a key claw break, it can still be used; however, a replacement is recommended.
- If a black key is to be replaced it is necessary to remove both adjacent white keys.

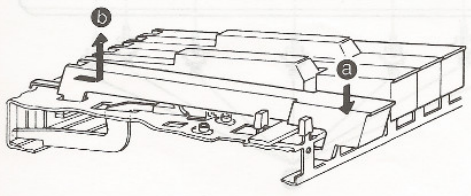

[Fig. 11]

Assembly

1. Insert the front part of the key into the chassis.
2. Insert the plate spring into the hammer notch as shown in Figure 12.
3. While slowly lowering the key into the chassis, insert the plate spring into the notch at the rear of the key.
4. Carefully insert the key into the opening in the chassis and slide the key towards the rear to lock it in place.

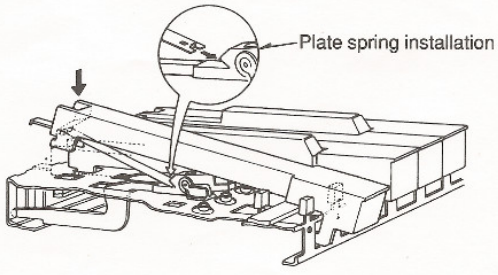

[Fig. 12]

8 Removing the printed circuit boards

• Remove the top cover (see Step 1).

MAIN P.C.B.

1. Remove the MAIN P.C.B. mounting screws (I 2 pcs.).
2. Release the claws of the 2 P.C.B. holders.

AS P.C.B.

1. Remove the AS P.C.B. mounting screws (J 3 pcs.).
2. Remove the ground wire holding screw (K 1 pc.).
3. Remove the claws of the P.C.B. holder.

JACK P.C.B.

1. Remove the MAIN and AS P.C.B.
2. Remove the JACK P.C.B. mounting screws (L 3 pcs.).
3. Remove the ground wire holding screws (M 2 pcs.).

HP P.C.B.

1. Remove the keyboard assembly (see Step 4).
2. Remove the headphone jack mounting nuts (N 2 pcs.).
3. Remove the HP P.C.B. mounting screw (O 1 pc.).
4. Remove the ground wire holding screw (P 1 pc.).

TCF P.C.B.

1. Remove the power transformer mounting screws (Q 4 pcs.).
2. Release the claws of the AC IN connector bracket.

LCD P.C.B.

1. Remove the control panel (see Step 3).
2. Remove the LCD P.C.B. mounting pins (R 4 pcs.).

MIC P.C.B.

1. Remove the keyboard assembly (see Step 4).
2. Remove the MIC P.C.B. cover mounting screws (S 2 pcs.).
3. Remove the MIC volume knob and then remove the MIC P.C.B. mounting nuts (T 1 pc. and U 1 pc.).
4. Remove the ground wire holding screw (V 1 pc.).

9 Removing the digital disk recorder (DDR)

1. Remove the control panel (see Step 3).
2. Remove the chassis on which DDR is attached and then remove (W 4 pcs. and X 1 pc.).
3. Pull out the DDR from the connector.

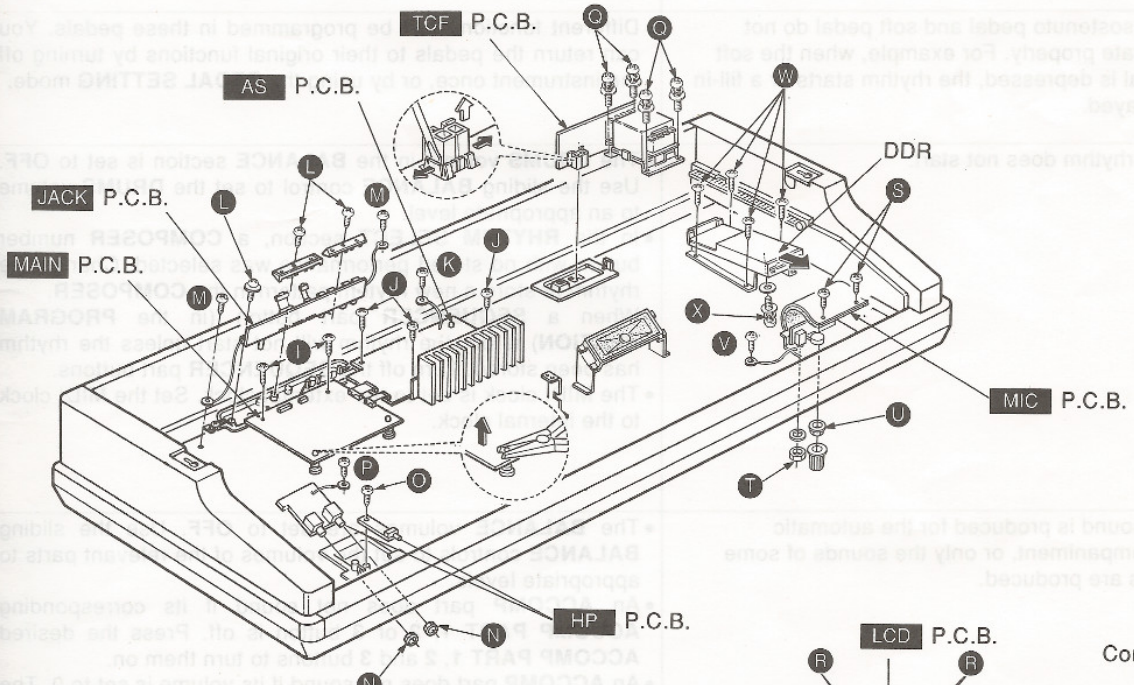

[Fig. 13]

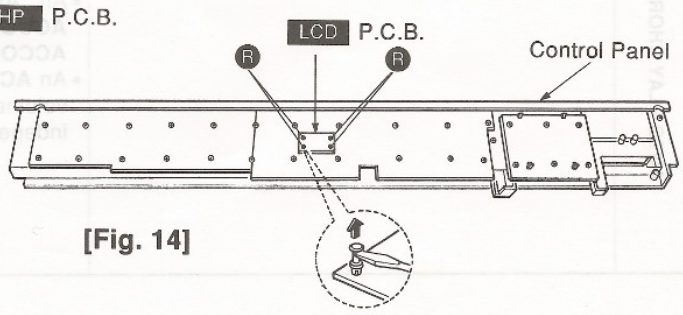

[Fig. 14]

SYMPTOMS WHICH APPEAR TO BE SIGNS OF TROUBLE

The following changes in performance may occur in the Technics Digital Ensemble but do NOT indicate trouble.

	Phenomenon	Remedy
Sounds and effects	The buttons, keys, etc. malfunction.	• Turn off the **POWER** button once, then turn it on again. If this procedure is not successful, turn off the **POWER** button once. Then, while pressing the three leftmost buttons in the **RHYTHM SELECT** section (**METRONOME 1**, **METRONOME 2** and **1**) at the same time, turn the **POWER** button on again. (Note that, in this case, all programmable settings, functions and memories return to their factory-preset status.)
	No sound is produced when the keys are pressed.	• The **MAIN VOLUME** is at the minimum setting. Adjust the volume with the **MAIN VOLUME** control. • The **BALANCE** volumes are set to **OFF**. Use the sliding **BALANCE** controls to set the volumes of the relevant parts to appropriate levels. • The local control for a part performed on the keyboard is set to off. Set the local control to on.
	The octave is higher or lower for some **SOUND SELECT** sounds.	• An octave change is programmed for some instrument sounds in order to make them easy to play. This is not a malfunction.
	Only percussive instrument sounds are produced when the keyboard is played.	• The **KEYBOARD PERCUSSION** button is on. Turn it off to return the keyboard to the normal sound.
	The sustain does not work even when the sustain pedal is depressed.	• When the **SUSTAIN PEDAL** button is off, the sustain does not work even when the pedal is depressed. Turn on the **SUSTAIN PEDAL** button.
	The sostenuto pedal and soft pedal do not operate properly. For example, when the soft pedal is depressed, the rhythm starts or a fill-in is played.	• Different functions can be programmed in these pedals. You can return the pedals to their original functions by turning off the instrument once, or by using the **PEDAL SETTING** mode.
Rhythm	The rhythm does not start.	• The **DRUMS** volume in the **BALANCE** section is set to **OFF**. Use the sliding **BALANCE** control to set the **DRUMS** volume to an appropriate level. • In the **RHYTHM SELECT** section, a **COMPOSER** number button with no stored performance was selected. Change the rhythm or store a new rhythm pattern in the **COMPOSER**. • When a **SEQUENCER** part button (in the **PROGRAM SECTION**) is on, the rhythm will not start unless the rhythm has been stored. Turn off the **SEQUENCER** part buttons. • The MIDI clock is set to the external clock. Set the MIDI clock to the internal clock.
AUTO PLAY CHORD	No sound is produced for the automatic accompaniment, or only the sounds of some parts are produced.	• The **BALANCE** volumes are set to **OFF**. Use the sliding **BALANCE** controls to set the volumes of the relevant parts to appropriate levels. • An **ACCOMP** part does not sound if its corresponding **ACCOMP PART 1**, **2** or **3** button is off. Press the desired **ACCOMP PART 1**, **2** and **3** buttons to turn them on. • An **ACCOMP** part does not sound if its volume is set to 0. The volume of each **ACCOMP** part can be adjusted independently.

	Phenomenon	Remedy
SEQUENCER	Storage is not possible.	• The remaining storage capacity of the **SEQUENCER** memory is 0. Use the **TRACK CLEAR** or **SONG CLEAR** function to erase the memory. • The MIDI **EXT. SEQ. MODE** is set to on. Set it to off.
	Multi-track storage is not possible.	• The playback track has been selected, but the **START/STOP** button has not been pressed. A flashing track indicator shows the track which is ready for recording, and a lit track indicator shows a track which is ready for playback. To record one track while listening to another (playback) track, press the **START/STOP** button to begin playback.
	A previously stored song is played back.	• The tracks of a song which was previously stored have not been cleared. Use the **TRACK CLEAR** or **SONG CLEAR** function to erase the memory before recording a new song.
COMPOSER	Storage is not possible.	• The remaining storage capacity of the **COMPOSER** memory is 0. Erase a **COMPOSER** number button in the **RHYTHM SELECT** section in which a pattern is stored.
	The playback timing of the rhythm pattern is different from the timing with which it was stored.	• The **QUANTIZE** function was on when the pattern was recorded. Set the **QUANTIZE** function to "OFF".
	Setting the time signature is not possible.	• The time signature cannot be changed for a pattern which is currently stored in the **COMPOSER**. Press the **COMPOSER CLEAR** button to erase the previously stored rhythm pattern.
	When editing a preset rhythm, the drums sound is not erased even when the **PERC ERASE** button is pressed.	• Some of the drums sounds of preset rhythm patterns cannot be erased. Follow the **COMPOSER CLEAR** procedure.
Digital Disk Recorder	The Digital Disk Recorder produces a noise during recording or playback.	• This occurs when the Digital Disk Recorder is reading a disk. It does not indicate a problem.
	When the operation to load from a memory disk is performed, the contents of the **SEQUENCER** are erased.	• When performing the load operation from a memory disk, the **SEQUENCER** memory changes to that of the data loaded from the memory disk. If you wish to preserve a song which is stored in the **SEQUENCER** memory, save it in a memory disk before performing the load procedure.

ERROR DISPLAY

When using the Digital Disk Recorder any of the following error messages may appear on the display.
If an error message appears on the display, follow the appropriate steps to remedy the problem.

Display	Remedy
SEQUENCER/COMPOSER	
Error !! Extnal seq mode	The **SEQUENCER** does not function because the **EXT. SEQ. MODE** is on. • Set the **EXT. SEQ. MODE** to off.
Error !! Seq data error	The data recorded in the **SEQUENCER** is defective. • Perform the recording procedure again.
Error !! * Memory full *	The **SEQUENCER** or **COMPOSER** memory is full. • No more data can be stored.
* Change Impossible *	When recording in the **COMPOSER**, you attempted to change the time signature without following the **COMPOSER CLEAR** procedure. • Follow the **COMPOSER CLEAR** procedure, and then change the time signature.
DIGITAL DISK RECORDER	
Error !! * Format error *	Formatting failure. • Perform the formatting procedure again.
Error !! ** Save error **	Saving failure. • Perform the saving procedure again.
Error !! ** Disk full **	No remaining memory storage capacity. • Insert a new disk, perform the saving procedure after formatting it.
Error !! ** Load error **	Loading failure. • Perform the loading procedure again.
Error !! Song not found	You have attempted to load a song number which has not been saved. • Load a song number which has been saved.
Error !! Write protected	The memory disk is write-protected. • Close the write-protect window of the disk.
Error !! Copy protected	You have attempted to save a song which is copy-protected. • A copy-protected song cannot be saved.
Error !! ** Other disk **	The memory disk has not been formatted by the Digital Disk Recorder. • Insert a correctly formatted disk.
Error !! *** No disk ***	No memory disk in the Digital Disk Recorder. • Insert a memory disk.

Warning:

- Some pre-recorded disks (for example, those recorded by the manufacturer) are copy-protected. Data from these disks cannot be copied.
- When the power is turned off after a copy-protected song has been loaded, the **SEQUENCER** contents will be erased.
- If a copy-protected song has been loaded and you want to then record a new song in the **SEQUENCER** and save it on a disk, be sure to first turn the power off once or perform the initialization procedure.

ABOUT THE SELF-DIAGNOSTIC FUNCTION

This model has some self-diagnostic capabilities. When set to the self-diagnostic mode, operation of various components can be verified by following the procedures in the chart below.

<table>
<tr><th>No.</th><th>PCB</th><th>TEST MODE</th><th>Procedure</th></tr>
<tr><td>1</td><td>MAIN</td><td>RAM (IC6, 8, 9), ROM (IC4, 5) check</td><td>1. Connect the CHECKING DEVICE (refer to page I-15) to CN7 on the MAIN P.C.B., and turn on the CHECKING DEVICE switch.
2. Turn on the power switch.</td></tr>
<tr><td colspan="4">When the power switch is turned on, the LED of the CHECKING DEVICE flashes 8 times. The first 4 flashes are for the RAM check, and the latter 4 flashes are for the ROM check. The order of the LED flashes corresponds to the respective IC numbers as shown below. If an IC is defective, the corresponding flash time is longer.

Examples
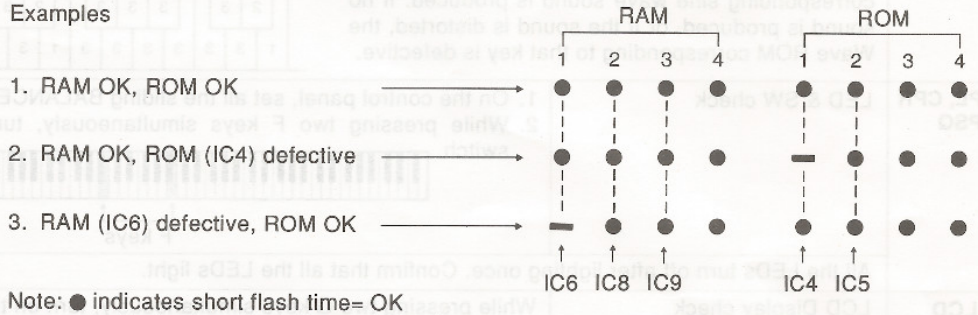

Note: ● indicates short flash time= OK
▬ indicates long flash time = Defective</td></tr>
<tr><td>2</td><td>MAIN</td><td>V25 gate array (IC2) check</td><td>While pressing two C keys simultaneously, turn on the power switch.
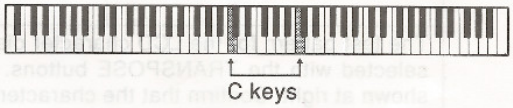
</td></tr>
<tr><td colspan="4">The contrast of the LCD (Musical Display) on the control panel changes in 8 stages. If the contrast does not change, the gate array (IC2) is defective.</td></tr>
<tr><td>3</td><td>CPL
CPSQ
CPR</td><td>Control panel gate array check.</td><td>1. Connect the CHECKING DEVICE to CN7 on the MAIN P.C.B. (The Checking Device switch should be off.)
2. On the control panel, set all the sliding BALANCE controls to OFF.
3. While pressing two D keys simultaneously, turn on the power switch.
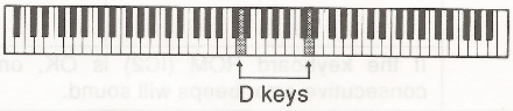
</td></tr>
<tr><td colspan="4">When the power switch is turned on, the LED of the CHECKING DEVICE flashes 8 times. The order of the LED flashes corresponds to the gate arrays (IC) on the respective P.C.B.s as shown below. If an IC is defective, the corresponding flash time is longer. There are 4 flashes in the cycle, which is repeated once, totaling 8 flashes.
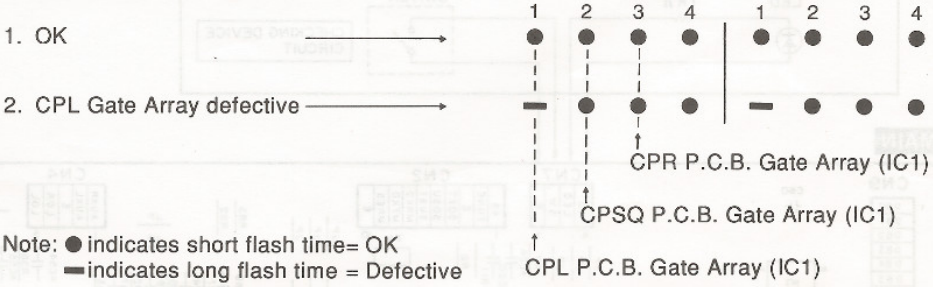

Note: ● indicates short flash time= OK
▬ indicates long flash time = Defective</td></tr>
</table>

No.	PCB	TEST MODE	Procedure
4	MAIN	Wave ROM (IC20, 21, 22) check	1. While pressing two E keys simultaneously, turn on the power switch. 2. Select the GRAND PIANO sound. 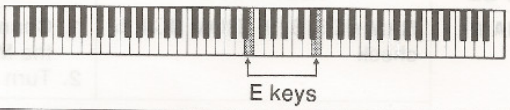 E keys
		When set to the self-diagnostic mode, the Wave ROM outputs a sine wave. The Wave ROMs correspond to the keyboard keys as shown in the diagram to the right. When a key is pressed, the corresponding sine wave sound is produced. If no sound is produced, or if the sound is distorted, the Wave ROM corresponding to that key is defective.	• The key number indicates the Wave ROM number (ROM 1: IC20, ROM 2: IC21, ROM 3: IC22). 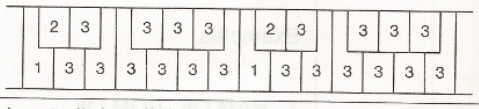
5	CPL, CPR CPSQ	LED & SW check	1. On the control panel, set all the sliding BALANCE controls to OFF. 2. While pressing two F keys simultaneously, turn on the power switch. 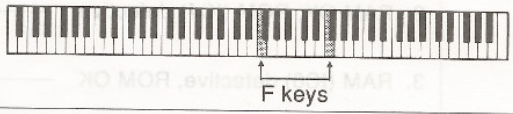 F keys
		All the LEDs turn off after lighting once. Confirm that all the LEDs light.	
6	LCD	LCD Display check	While pressing two G keys simultaneously, turn on the power switch. 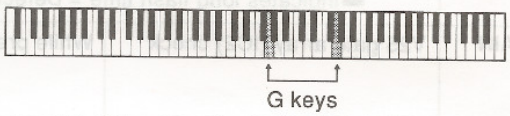 G keys
		The test pattern for the LCD character display is shown. There are 4 different test patterns, which are selected with the TRANSPOSE buttons. Only the first display of the test pattern display differs, as shown at right. Confirm that the characters appear correctly. Pattern 1  Pattern 2  Pattern 3  Pattern 4 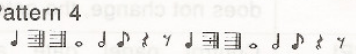	
7	MKB	Keyboard ROM (IC2) check	While pressing two B keys simultaneously, turn on the power switch. 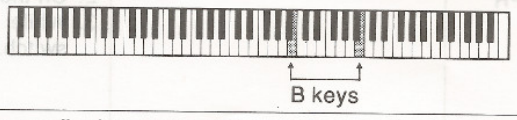 B keys
		If the keyboard ROM (IC2) is OK, one confirming beep will sound. If it is defective, several consecutive error beeps will sound.	

■ Connection between serving CHECKING DEVICE and MAIN PCB

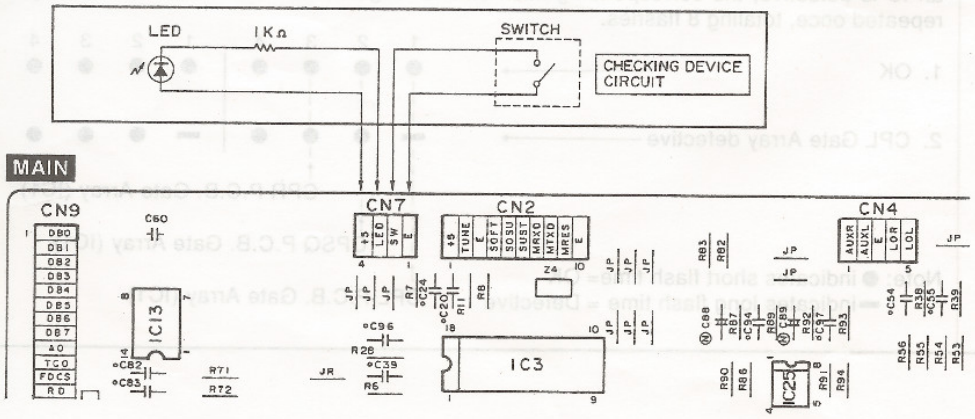

MIDI IMPLEMENTATION CHART

Digital Ensemble [SX-PR370] **(Transmitted)**

Function		RIGHT	LEFT	ACCOMP 1	ACCOMP 2	ACCOMP 3	BASS	DRUMS	Remarks
Basic Channel	Default	1~16	1~16	1~16	1~16	1~16	1~16	1~16	memorized
	Changed	1~16	1~16	1~16	1~16	1~16	1~16	1~16	
Mode	Default	3	3	3	3	3	3	3	OMNI OFF POLY MODE
	Messages	×	×	×	×	×	×	×	
	Altered	—	—	—	—	—	—	—	
Note Number		0~127	0~127	0~127	0~127	0~127	0~127	36~79**	Changes depending on the position of the transpose control.
	True voice	—	—	—	—	—	—	—	
Velocity	Note ON	○	○	○	○	○	○	○	
	Note OFF	× (9nH:v=0)	× (9nH:v=0)	× (9nH:v=0)	× (9nH:v=0)	× (9nH:v=0)	× (9nH:v=0)	× (9nH:v=0)	
After Touch	Key's	×	×	×	×	×	×	×	
	Ch's	×	×	×	×	×	×	×	
Pitch Bender		○***	○***	○***	○***	○***	○***	×	
Control Change	0, 32	○	○	○	○	○	○	○	bank select (TECH 1 mode only)
	1	○***	○***	○***	○***	○***	○***	×	modulation
	7	○	○	○	○	○	○	○	volume
	64	○	○	○	○	○	○	×	sustain
	66	○	○	×	×	×	×	×	sostenuto pedal
	67	○	○	○	○	○	○	×	soft pedal
	80	×	○	×	×	×	×	×	auto play chord
	82	×	×	×	×	×	×	○	intro & ending, fill in
	83	○	○	×	×	×	×	×	octave shift
	93	○	×	×	×	×	×	×	chorus (EFFECT)
Prog Change		○	○	○	○	○	○	○	
	True #	—	—	—	—	—	—	—	
System exclusive		○							
System common	Song Pos	×							
	Song Sel	○×* (0~19)							
	Tune	×							
System Real Time	Clock	○							
	Commands	○ ×							start/stop, continue
Aux Messages	Local ON/OFF	×	×	×	×	×	×	×	
	All notes OFF	×	×	×	×	×	×	×	
	Active Sense	○							
	Reset	×							
Notes		* ○ × .....Whether or not the data for each of these items is transmitted can be set. **When the program change mode is set to TECH (1 or 2), note numbers for **DRUMS** differ. ***Transmitted during **SEQUENCER** playback and during rhythm performance.							

Mode 1: OMNI ON, POLY **Mode 2:** OMNI ON, MONO ○: Yes
Mode 3: OMNI OFF, POLY **Mode 4:** OMNI OFF, MONO ×: No

Digital Ensemble [SX-PR370] (Recognized)

Function		RIGHT	LEFT	ACCOMP 1	ACCOMP 2	ACCOMP 3	BASS	DRUMS	Remarks
Basic Channel	Default	1~16	1~16	1~16	1~16	1~16	1~16	1~16	memorized
	Changed	1~16	1~16	1~16	1~16	1~16	1~16	1~16	
Mode	Default	3	3	3	3	3	3	3	OMNI OFF POLY MODE
	Messages	×	×	×	×	×	×	×	
	Altered	—	—	—	—	—	—	—	
Note Number		0~127	0~127	0~127	0~127	0~127	0~127	36~79**	Changes depending on the sound.
	True voice	0~127	0~127	0~127	0~127	0~127	0~127	36~79	
Velocity	Note ON	○	○	○	○	○	○	○	
	Note OFF	×	×	×	×	×	×	×	
After Touch	Key's	×	×	×	×	×	×	×	
	Ch's	×	×	×	×	×	×	×	
Pitch Bender		○	○	○	○	○	○	×	
Control Change	0, 32	○	○	○	○	○	○	○	bank select (TECH 1 mode only)
	1	○	○	○	○	○	○	×	modulation
	7	○	○	○	○	○	○	○	volume
	64	○	○	○	○	○	○	×	sustain
	66	○	○	×	×	×	×	×	sostenuto pedal
	67	○	○	○	○	○	○	×	soft pedal
	80	×	○	×	×	×	×	×	auto play chord
	82	×	×	×	×	×	×	○	intro & ending, fill in
	83	○	×	×	×	×	×	×	octave shift
	93	○	×	×	×	×	×	×	chorus (EFFECT)
Prog Change		0~16 (PR170)	0~16 (PR170)	0~16 (PR170)	0~16 (PR170)	0~16 (PR170)	0~16 (PR170)	0~29	
	True #	0~21 (PR270/PR370)	0~21 (PR270/PR370)	0~21 (PR270/PR370)	0~21 (PR270/PR370)	0~21 (PR270/PR370)	0~21 (PR270/PR370)		
System exclusive		×							
System common	Song Pos	×							
	Song Sel	○×* (0~19)							
	Tune	×							
System Real Time	Clock	○							
	Commands	○ ×*							start/stop, continue
Aux Messages	Local ON/OFF	×	×	×	×	×	×	×	
	All notes OFF	○	○	○	○	○	○	○	
	Active Sense	○							
	Reset	×							
Notes		* ○ × .....Whether or not the data for each of these items is received can be set. **When the program change mode is set to TECH (1 or 2), note numbers for **DRUMS** differ.							

Mode 1: OMNI ON, POLY **Mode 2:** OMNI ON, MONO ○: Yes
Mode 3: OMNI OFF, POLY **Mode 4:** OMNI OFF, MONO ×: No

PRECAUTIONS BEFORE SERVICING

■ Precautions for measuring of the output waveforms.

1. The waveform was measured with a "National Digital Storage Oscilloscope VP-5730A". Therefore the waveforms of musical tone signals shown may differ somewhat due to the difference in the timing of triggering.
2. Since the 1/10 test probe is used, the indicated voltage value on the bottom part of each waveform photo is 1/10 of the actual value (e.g. 0.2V/cm should be 2.0V/cm).
3. To measure the waveforms, first set this unit to the self-diagnostic mode (refer to page I-15, No. 4). The WAVE ROM output will then be output as a sine wave to facilitate the servicing check.

■ Important safety notice:

Components identified by a ⚠ mark have special characteristics important for safety.
When replacing any of these components, use only manufacturer's specified parts.

■ Symbolic Marks

The symbolic marks for resistors and capacitors which used in this circuits are classified as following TABLE-1 and TABLE-2.

1. RESISTORS
   - Resistors without symbolic mark are FIXED CARBON FILM RESISTORS (ERD-type).
   - All resistors are 1/4WATT, ±5% TOLERANCE unless otherwise designated in the schematic diagrams.

(TABLE-1)

SYMBOL	SPECIFICATION	SYMBOL	SPECIFICATION
Ⓕ	Fixed Carbon Film Resistors "FLAME-PROOF" (ERD—F—type)	Ⓕ	Fixed Metal Film Resistors "FLAME-PROOF" (ERX—type)
Ⓕ	Fixed Wire Wound Resistors "FLAME-PROOF" (ERF—type)	[F]	Fuse Type Fixed Metal Oxide Film Resistors "FLAME-PROOF" (ERQ—type)
Ⓕ	Fixed Metal Oxide Film Resistors "FLAME-PROOF" (ERG—type)	[F]	Fuse Type Fixed Carbon Film Resistors "FLAME-PROOF" (ERD2FC—type)
Ⓖ	Fixed Metal Film Resistors (Precision and High Stability) (ERO—type)		

2. CAPACITORS
   - Capacitors without symbolic mark are POLYESTER CAPACITORS. (ECQM-type, ECQG-type, ±10% Tolerance)
   - Polarized capacitors without symbolic mark are Aluminum Electrolytic Capacitors. (ECEA—type, ±20% Tolernace)

(TABLE-2)

SYMBOL	SPECIFICATION	TYPE
Ⓝ	Non-Polarized Electrolytic Capacitors	ECEA__KN__type
Ⓨ	Non-Polarized Electrolytic (for Network System)	ECEA__Y__type
Ⓜ	Aluminum Electrolytic Capacitors (Low leakage current type)	ECEA__M__type
Ⓩ	Aluminum Electrolytic Capacitors (Low impedance type)	ECEA__Z__type
Ⓣ	Tantalum Solid Electrolytic Capacitors	ECS__type
TF	Metalized Plastic Film Capacitors (TF Series)	ECQV__type
	Polyester Film Capacitors	ECQB__type
○	Temperature Compensating Ceramic Capacitors	ECC__type
	High-Dielectric Constant Ceramic Capacitors	ECK__type ECR__type
	Ceramic Capacitors (Cylinder type)	ECBA__type
	Metalized Polyester Film Capacitors for Across the Line	ECQ__EW__type
	Aluminum Electrolytic Capacitors for Smoothing Circuit	ECES__type
	Multilayer Ceramic Chip Capacitors	ECUV__type

MEMO

WIRING CONNECTION DIAGRAM

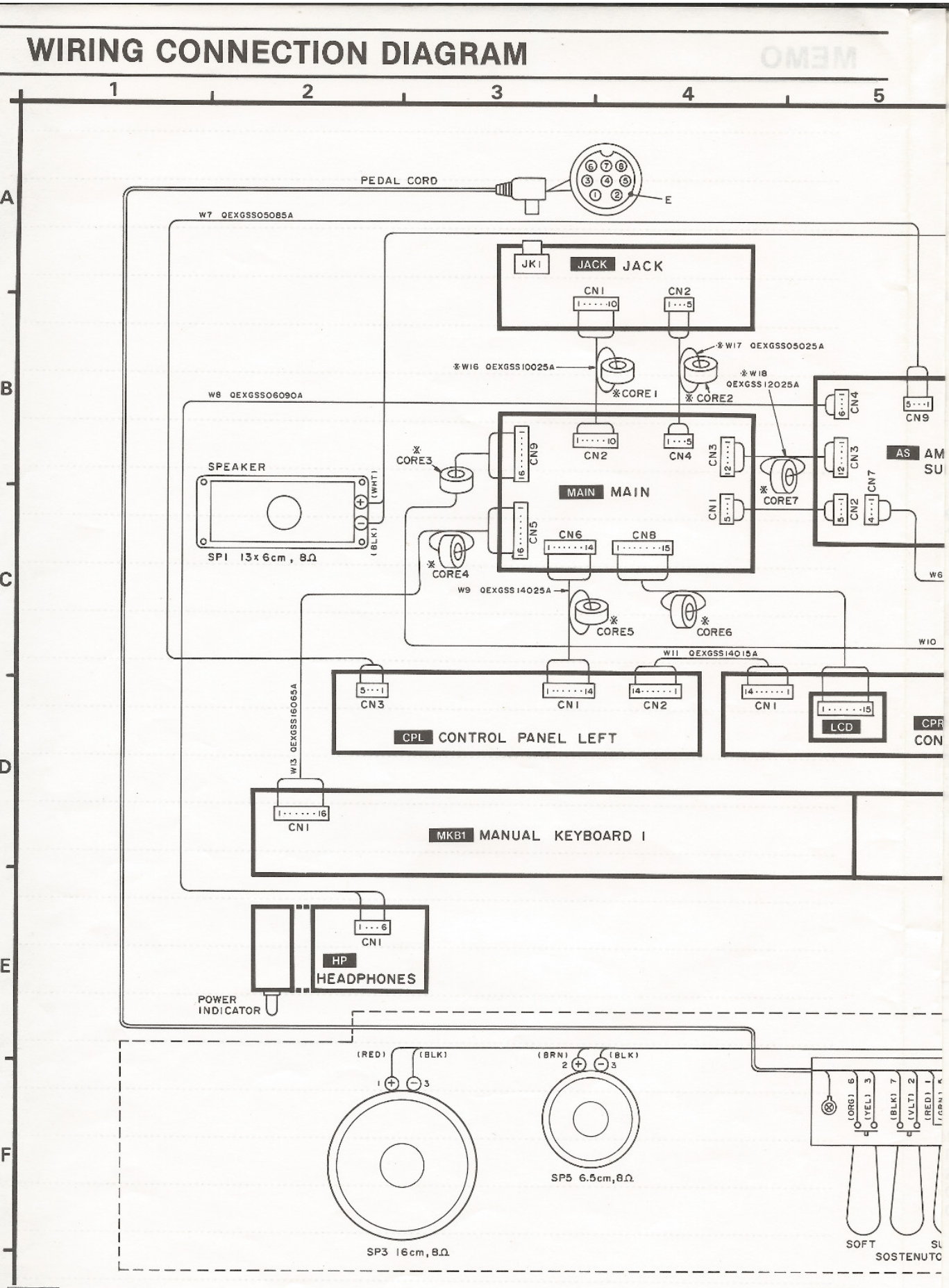

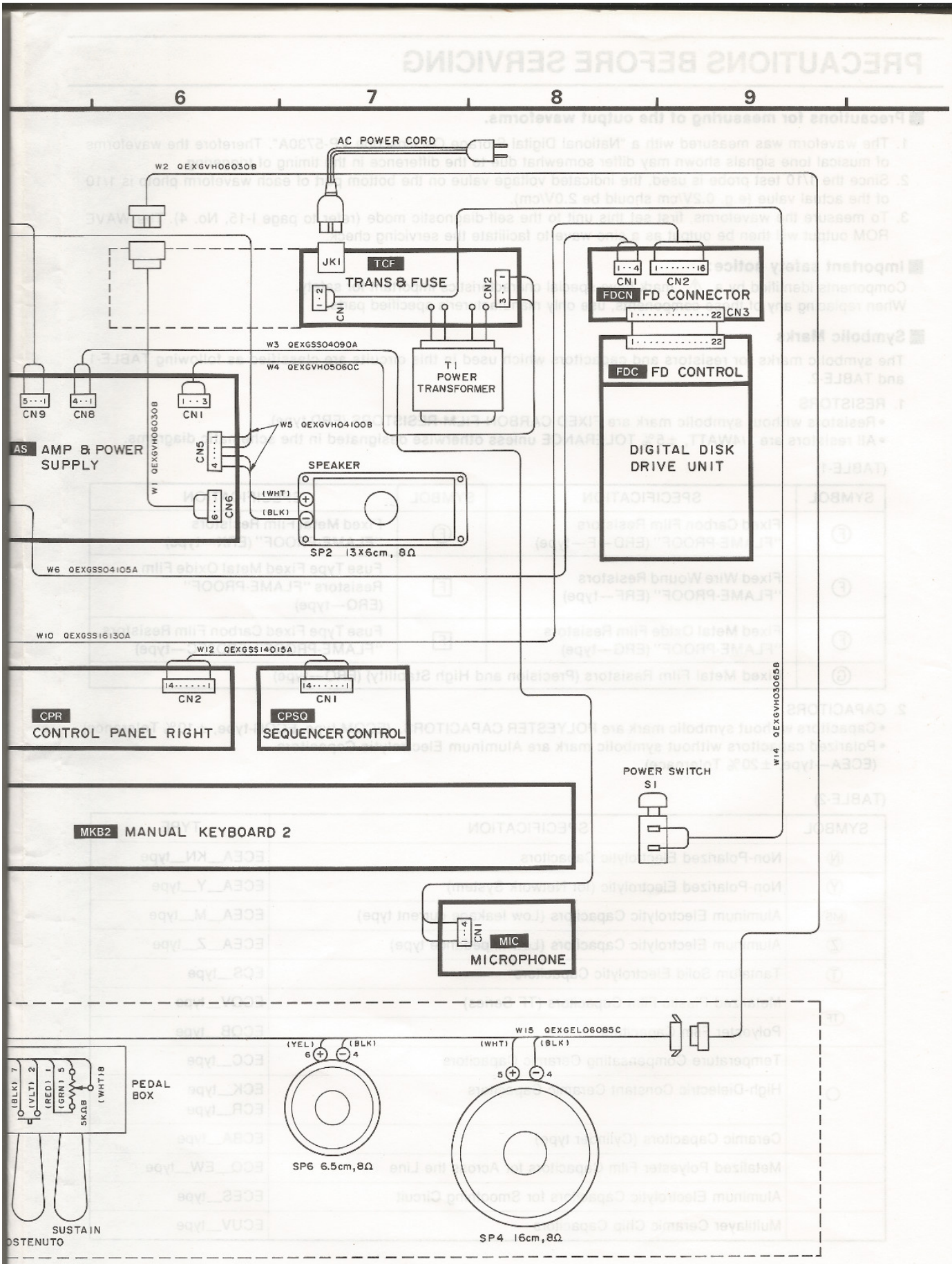
6
7
8
9
AC POWER CORD
W2 QEXGVH060308
JK1
TCF
TRANS & FUSE
CN1
CN2
W3 QEXGSS04090A
W4 QEXGVH05060C
T1
POWER
TRANSFORMER
CN1
CN2
FDCN FD CONNECTOR
CN3
FDC FD CONTROL
DIGITAL DISK
DRIVE UNIT
CN9
CN8
CN1
AS AMP & POWER
SUPPLY
W1 QEXGVH060308
CN5
CN6
W5 QEXGVH04100B
SPEAKER
(WHT)
(BLK)
SP2 13x6cm, 8Ω
W6 QEXGSS04105A
W10 QEXGSS16130A
W12 QEXGSS14015A
CN2
CN1
CPR
CONTROL PANEL RIGHT
CPSQ
SEQUENCER CONTROL
W14 QEXGVH03065B
POWER SWITCH
S1
MKB2 MANUAL KEYBOARD 2
CN1
MIC
MICROPHONE
W15 QEXGEL06085C
(BLK) 7
(VLT) 2
(RED) 1
(GRN) 5
5KΩB
(WHT) 8
PEDAL
BOX
(YEL)
(BLK)
SP6 6.5cm, 8Ω
(WHT)
(BLK)
SP4 16cm, 8Ω
SUSTAIN
OSTENUTO

BLOCK DIAGRAM

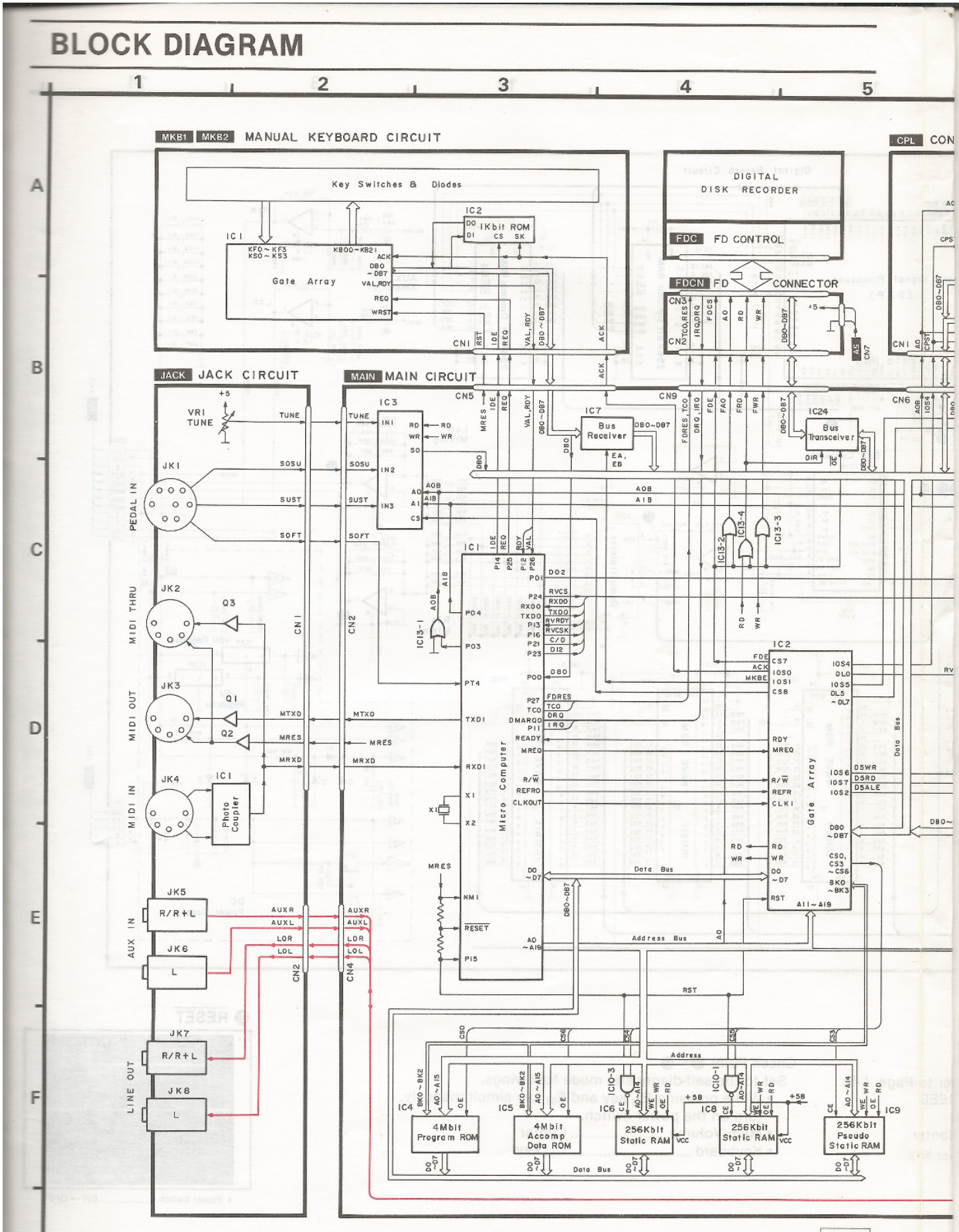

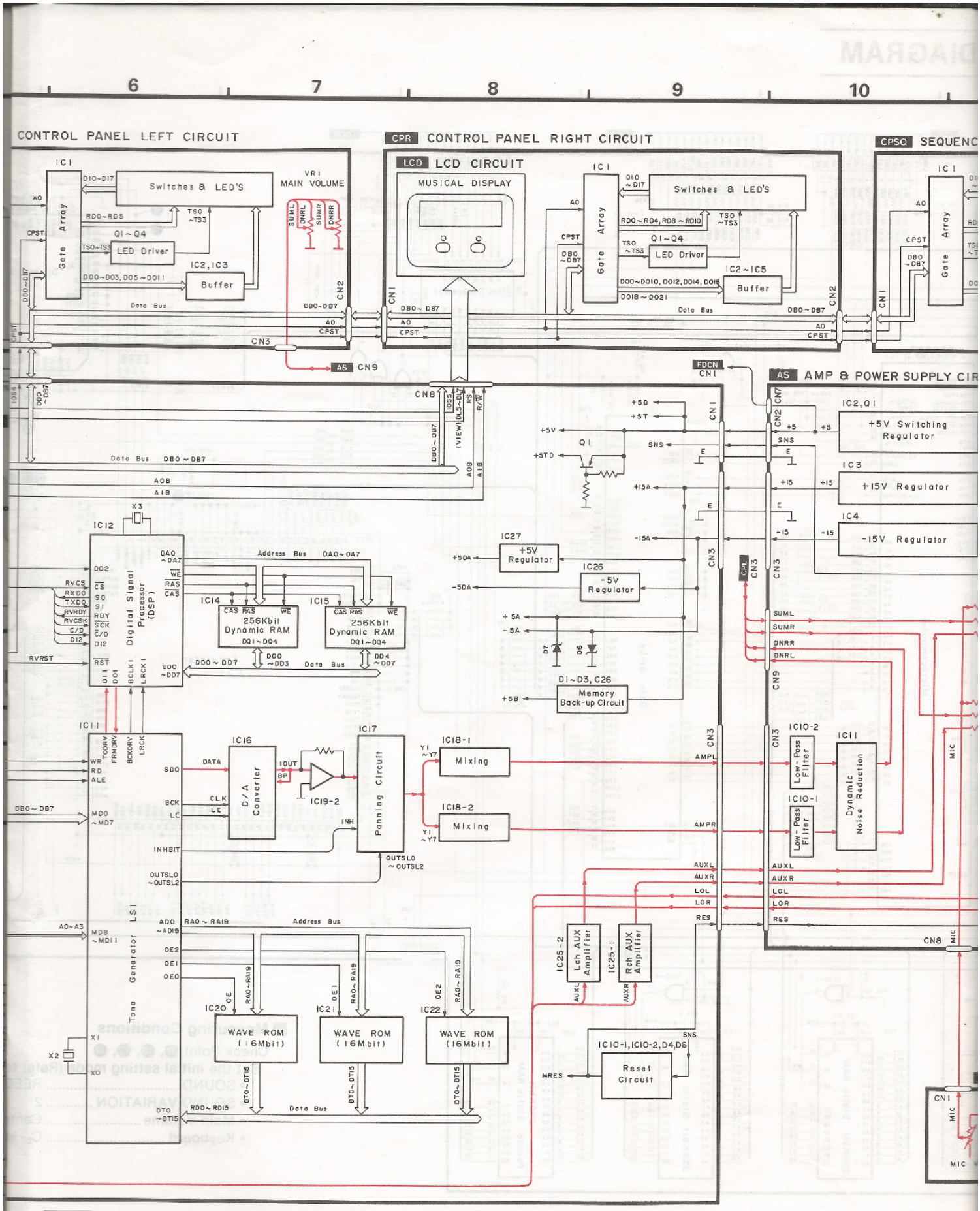
6
7
8
9
10
CONTROL PANEL LEFT CIRCUIT
CPR CONTROL PANEL RIGHT CIRCUIT
LCD LCD CIRCUIT
CPSQ SEQUENC
MUSICAL DISPLAY
MAIN VOLUME
VR1
Switches & LED'S
LED Driver
Buffer
Gate Array
Data Bus
AS CN9
AS AMP & POWER SUPPLY CIR
FDCN
+5V Switching Regulator
+15V Regulator
-15V Regulator
+5V Regulator
-5V Regulator
Memory Back-up Circuit
Digital Signal Processor (DSP)
256Kbit Dynamic RAM
Tone Generator LSI
WAVE ROM (16Mbit)
D/A Converter
Panning Circuit
Mixing
Low-Pass Filter
Dynamic Noise Reduction
Lch AUX Amplifier
Rch AUX Amplifier
Reset Circuit
Address Bus
MIC

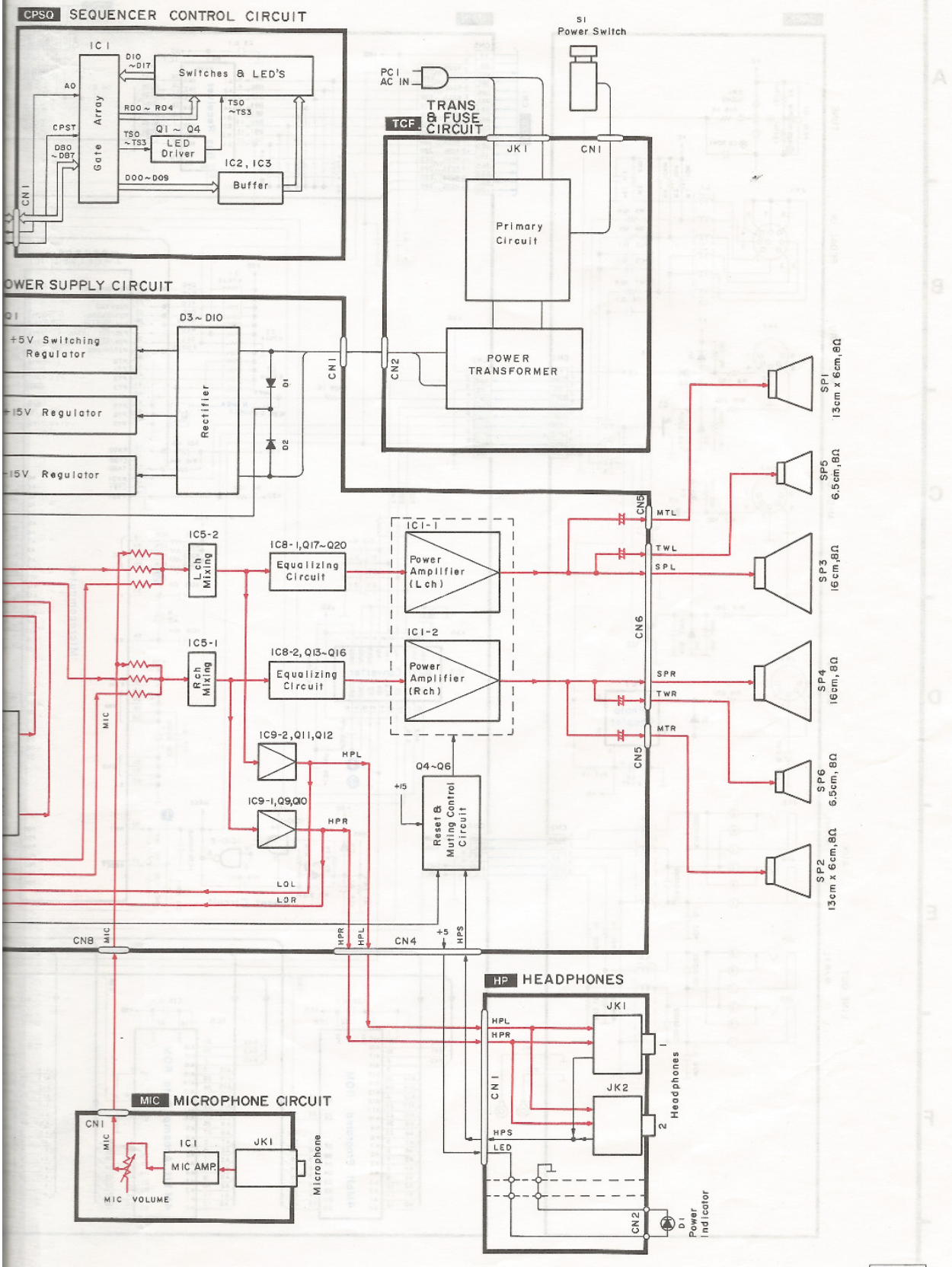
CPSQ SEQUENCER CONTROL CIRCUIT
IC1
Switches & LED'S
Array
Gate
LED Driver
Q1 ~ Q4
IC2, IC3
Buffer
CN1
S1
Power Switch
PC1
AC IN
TRANS & FUSE CIRCUIT
TCF
JK1
CN1
Primary Circuit
POWER TRANSFORMER
CN2
POWER SUPPLY CIRCUIT
+5V Switching Regulator
Regulator
Regulator
Rectifier
D3 ~ D10
D1
D2
IC5-2
L ch Mixing
IC8-1, Q17~Q20
Equalizing Circuit
IC1-1
Power Amplifier (Lch)
IC5-1
R ch Mixing
IC8-2, Q13~Q16
Equalizing Circuit
IC1-2
Power Amplifier (Rch)
CN5
CN6
MTL
TWL
SPL
SPR
TWR
MTR
SP1 13cm x 6cm, 8Ω
SP5 6.5cm, 8Ω
SP3 16cm, 8Ω
SP4 16cm, 8Ω
SP6 6.5cm, 8Ω
SP2 13cm x 6cm, 8Ω
IC9-2, Q11, Q12
IC9-1, Q9, Q10
HPL
HPR
LOL
LOR
Q4~Q6
Reset & Muting Control Circuit
CN8
CN4
HPS
HP HEADPHONES
JK1
JK2
Headphones
LED
D1
Power Indicator
MIC MICROPHONE CIRCUIT
MIC AMP
MIC VOLUME
Microphone

MAIN JACK MAIN AND JACK CIRCUIT DIAGRAM

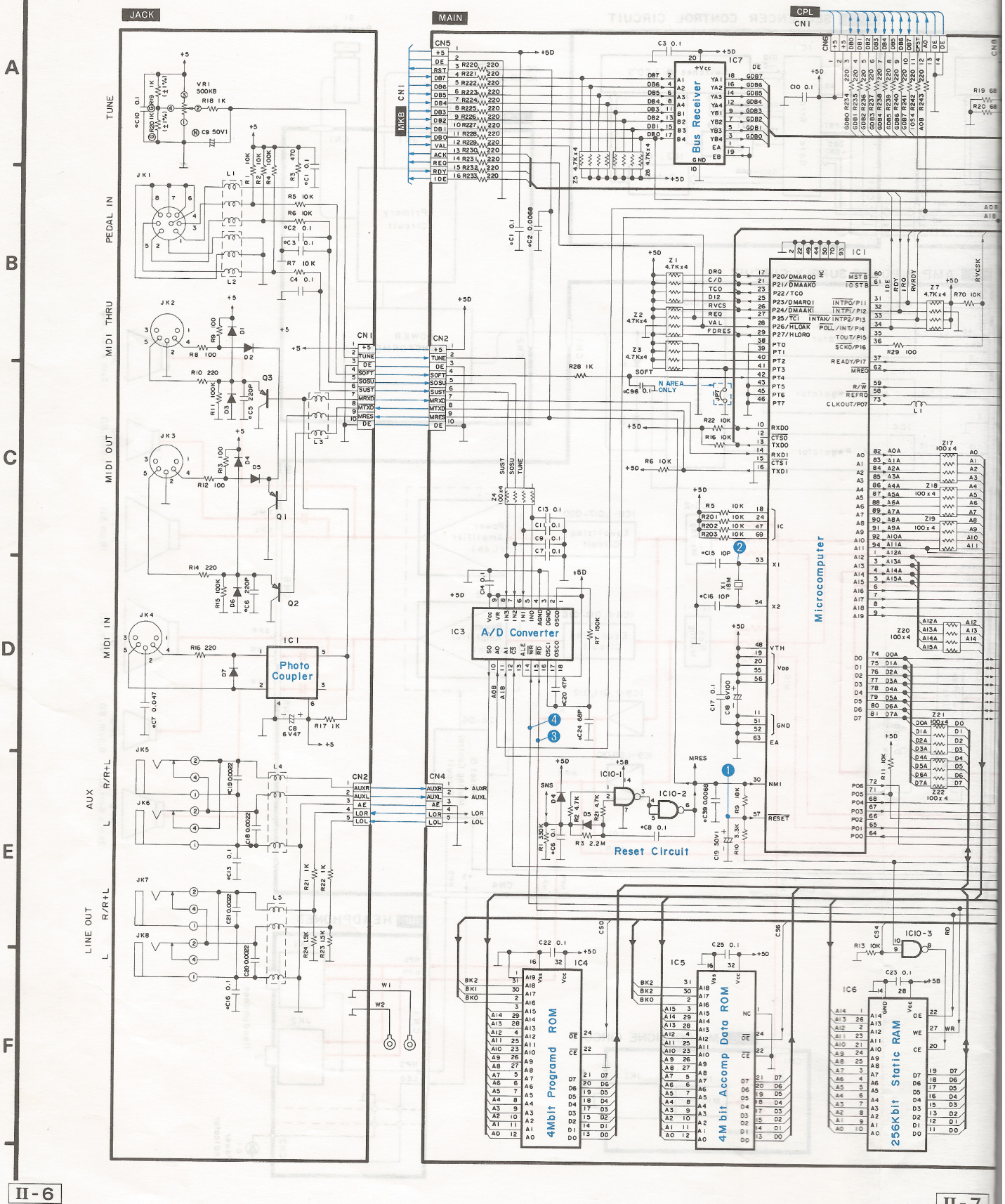

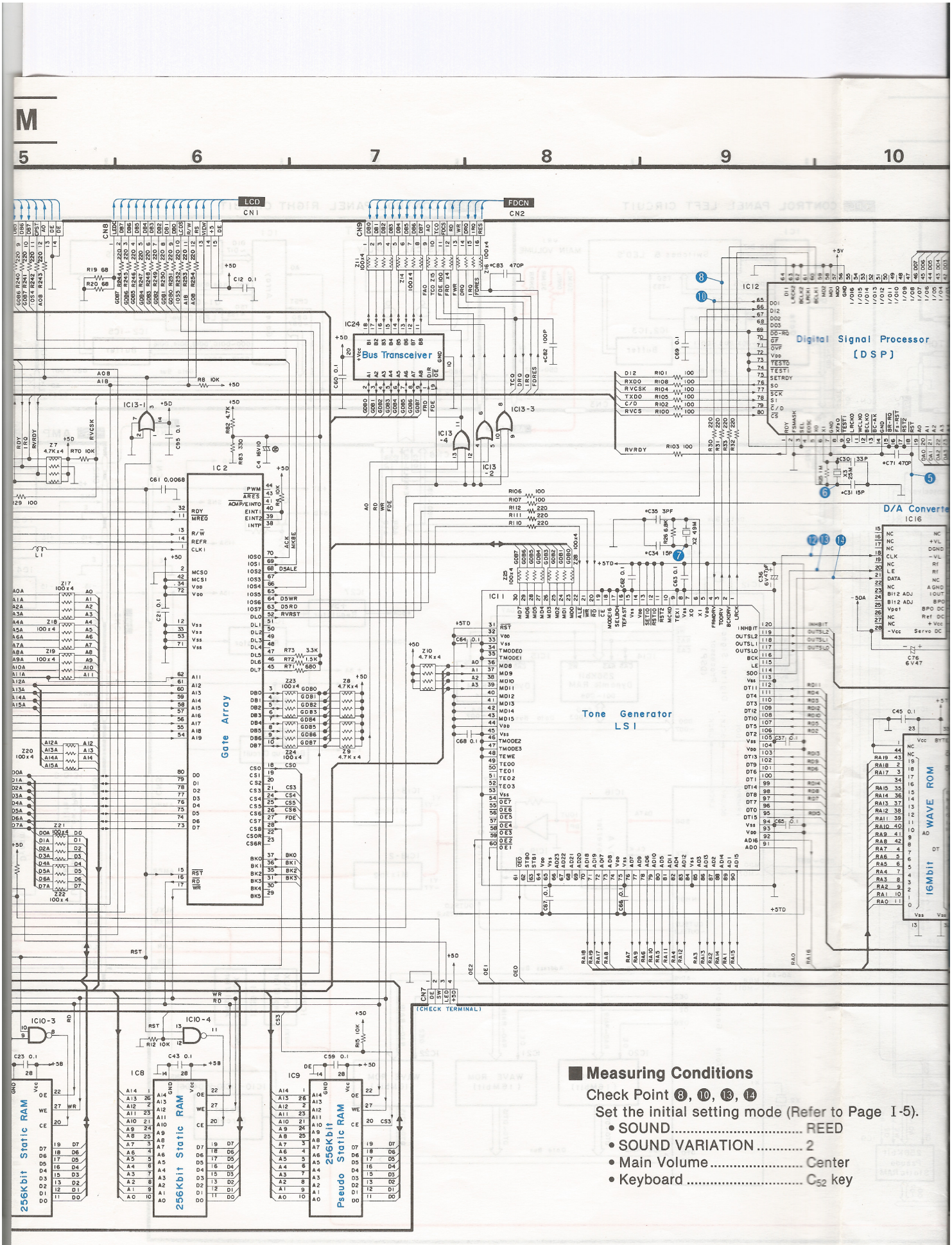

■ Measuring Conditions

Check Point ❽, ❿, ⓭, ⓮

Set the initial setting mode (Refer to Page I-5).

- SOUND..... REED
- SOUND VARIATION 2
- Main Volume..... Center
- Keyboard ..... C_{52} key

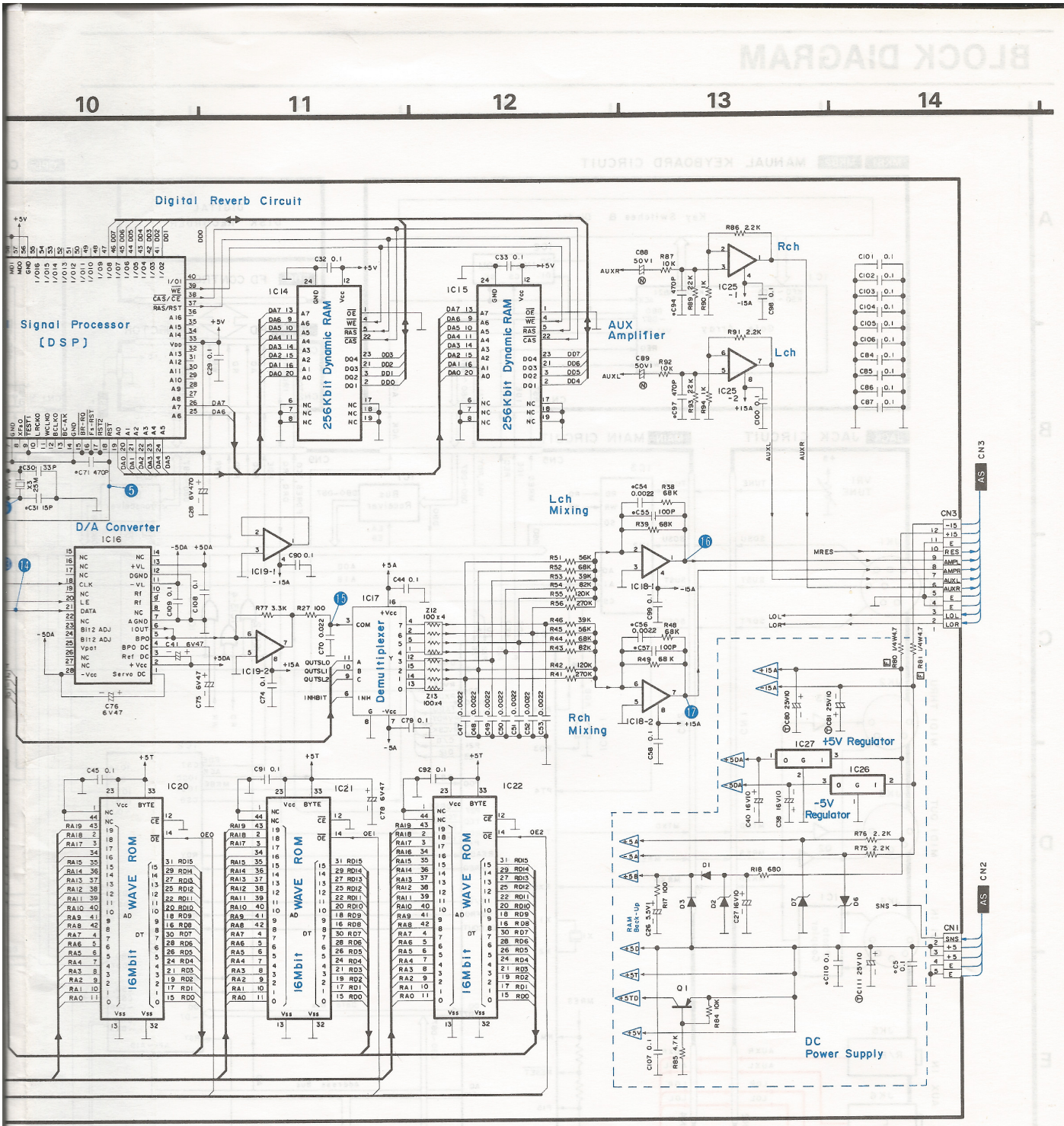

Check Point ⓯～⓱

Set to the self-diagnostic mode followings.

- While pressing E_{44} key and E_{56} key simultaneously, turn on the power switch.
- Main Volume ..... Center
- Keyboard ..... C_{52} key

❶ RESET

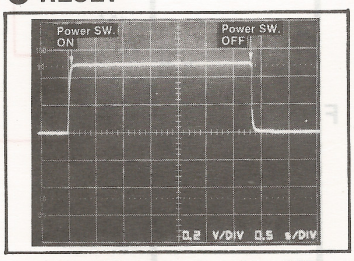

- Power Switch ..... ON → OFF

MAIN JACK MAIN AND JACK CIRCUIT BOARD

JACK

• [M] [MC] [XM] [EZ] Areas

SXPG209841

• Other Areas

SXPG209831

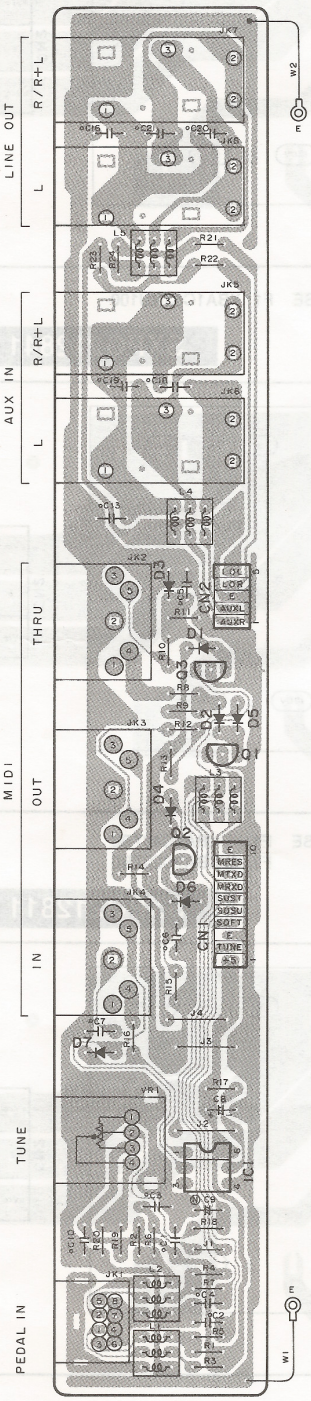

MAIN COMPONENT SIDE

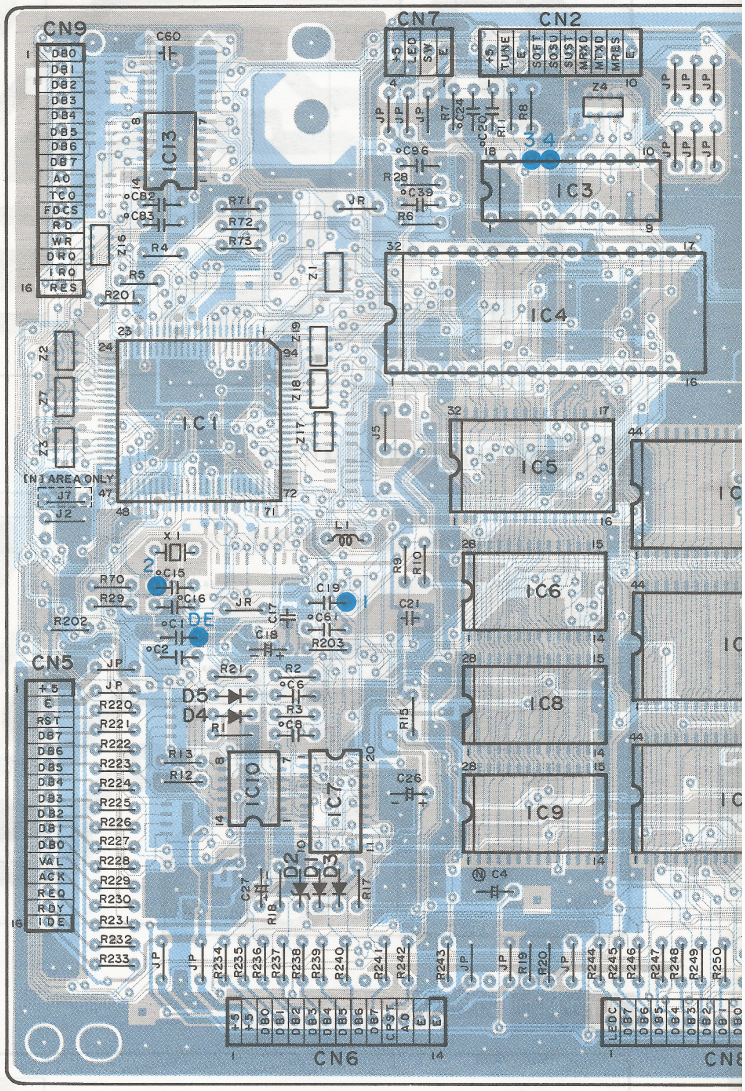

❷ X1, 18MHz

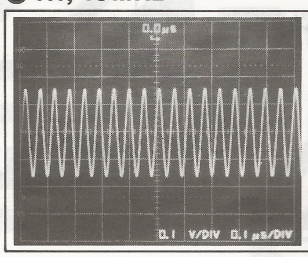

❸ RD

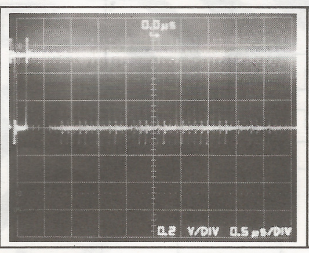

❹ WR

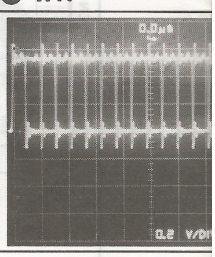

Component Side
Foil Side

MAIN FOIL SIDE

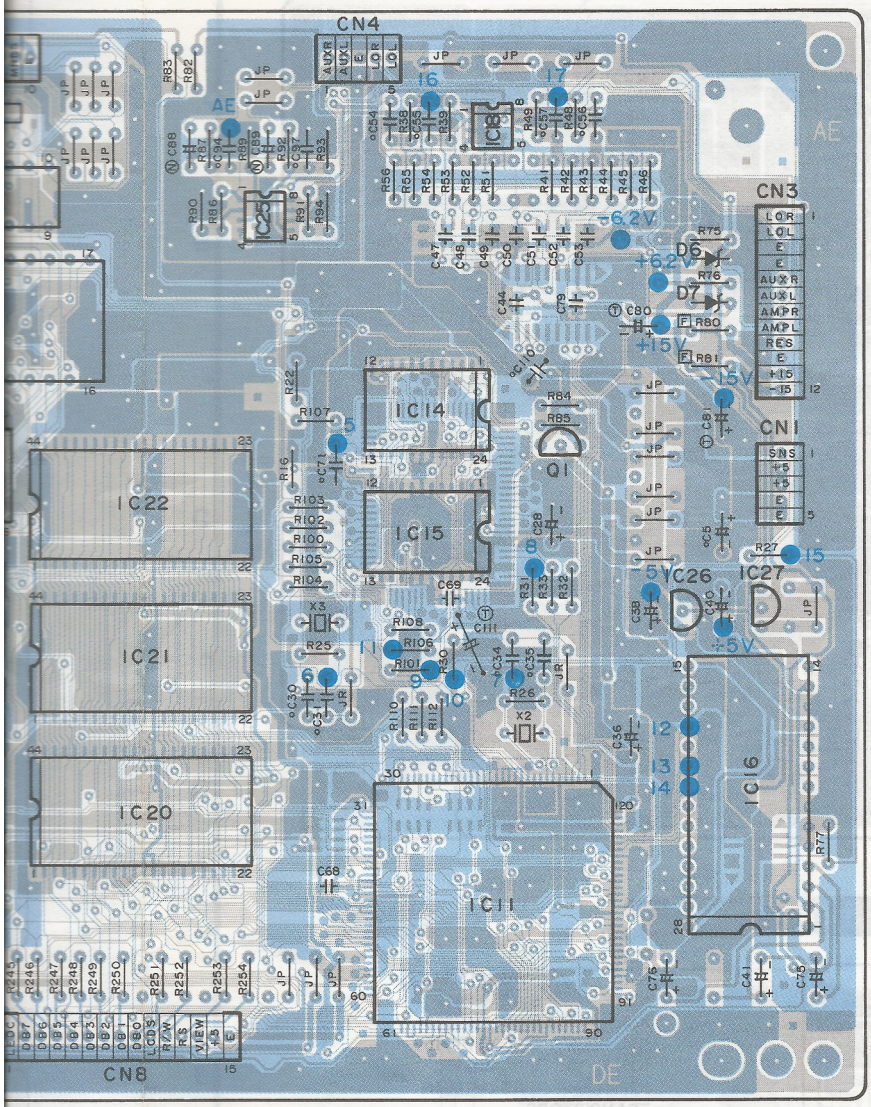

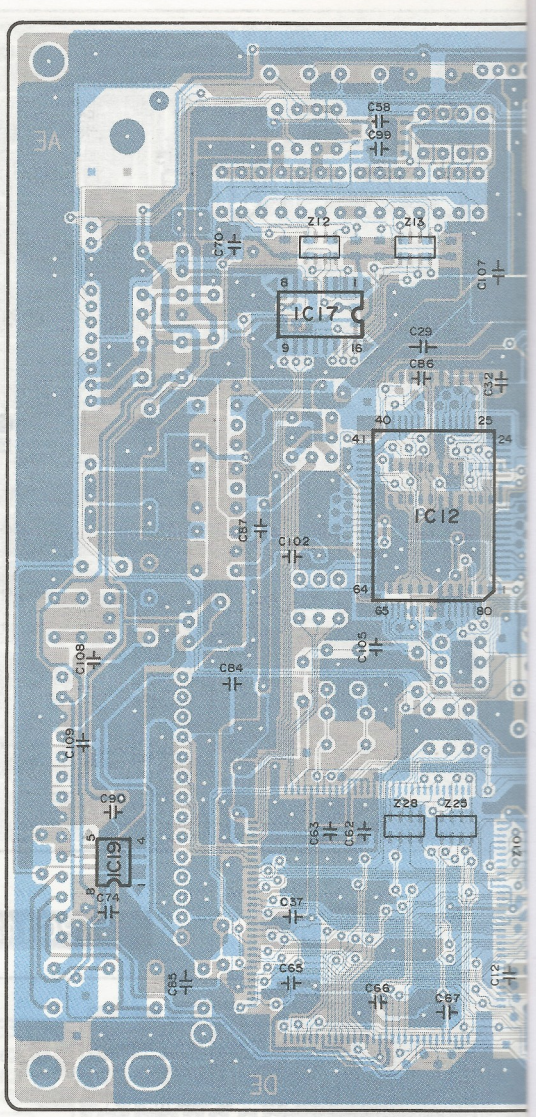

❺ RVRST **❻ X3, 25 MHz** **❼ X2, 49.195 MHz** **❽, ❿**

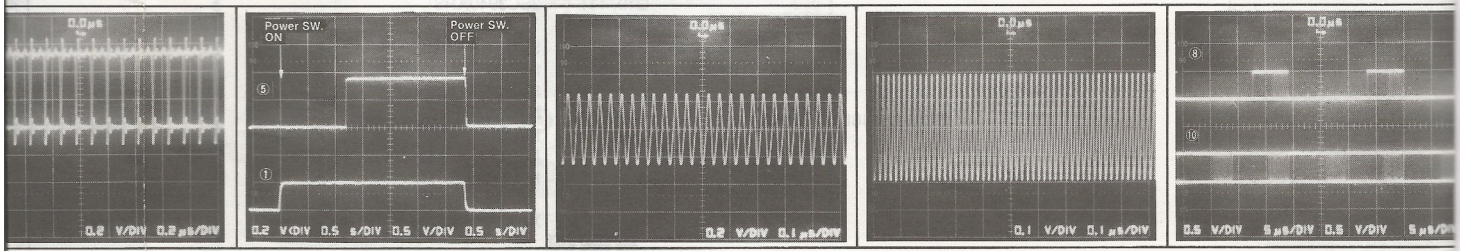

• Power Switch ..... ON → OFF

10 11 12 13 14

• [M] [MC] [XM] [EZ] areas **SXPG211451**

• Other areas **SXPG211411**

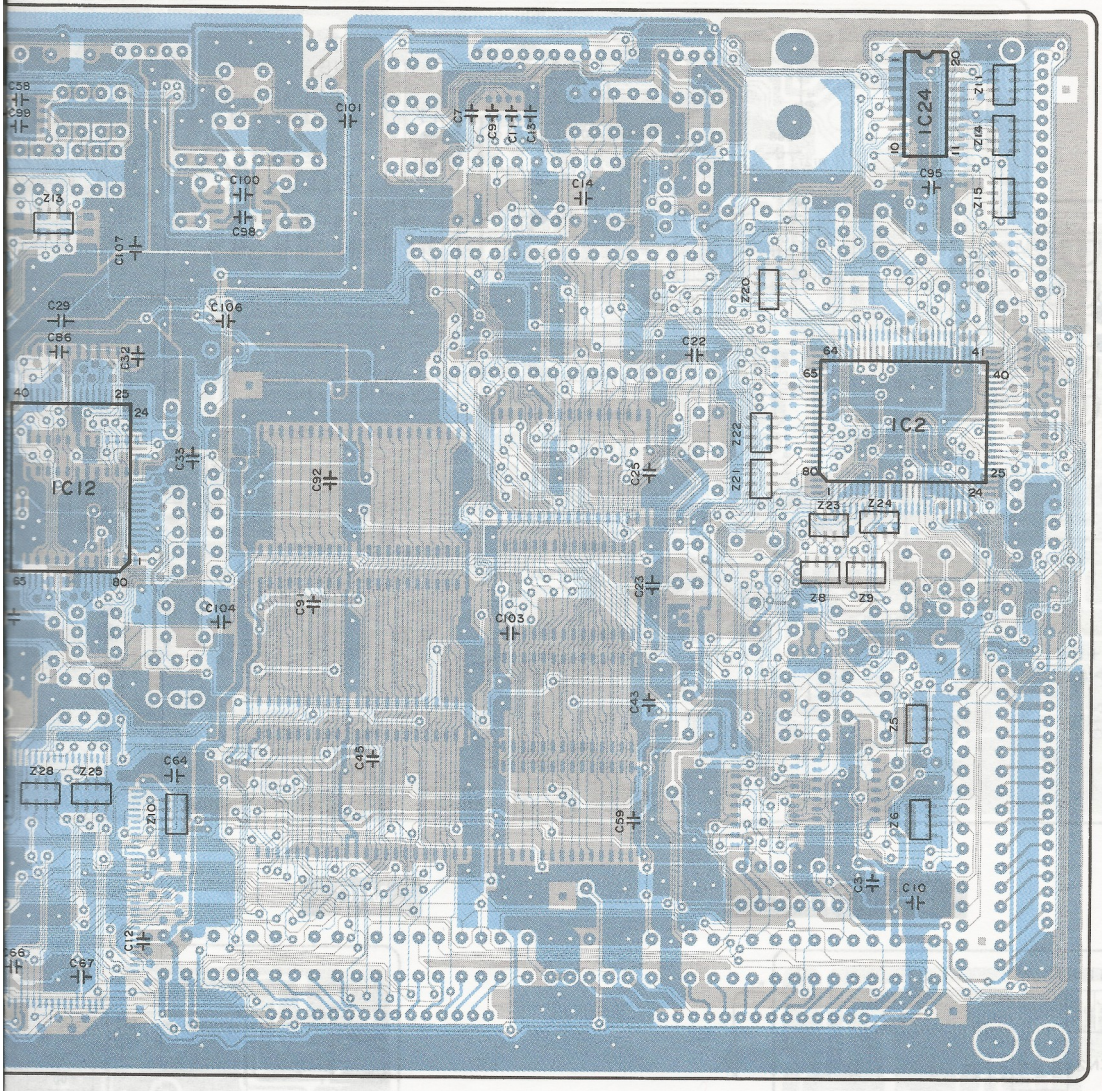

MAIN

NOTES:

• IC'S

IC1:	D70325GJ-10
IC2:	D65012GF-A79
IC3:	SVIGMSM6253
IC4:	QSIGCR370AX0
IC5:	QSIGH3C04C21
IC6, 8:	ATT7C256BF85
IC7:	M74HC244FP
IC9:	HM65256BLF10
IC10:	M74HC00FP
IC11:	TC25540AF006
IC12:	D6382GF-3B9
IC13:	M74HC32FP
IC14, 15:	MN41464AS-08
IC16:	PCM63P
IC17:	T74H4051AF
IC18, 25:	M5218AFP
IC19:	M5238FP
IC20:	QSIGH3C16C51
IC21:	QSIGH3C16C52
IC22:	QSIGH3C16C53
IC24:	M74HC245FP
IC26:	M5279L05
IC27:	SVIGM5278L05

• TRANSISTOR

Q1:	2SA1534ARS

• DIODES

D1, 3~5:	MA165TA5
D2:	MA4051MTA
D6, 7:	MA4062

JACK

NOTES:

• IC

IC1:	SVIGTLP513

• TRANSISTORS

Q1~3:	2SA1015-GR

• DIODES

D1~7:	MA165TA5

⑫ ⑬, ⑭ ⑮ ⑯, ⑰

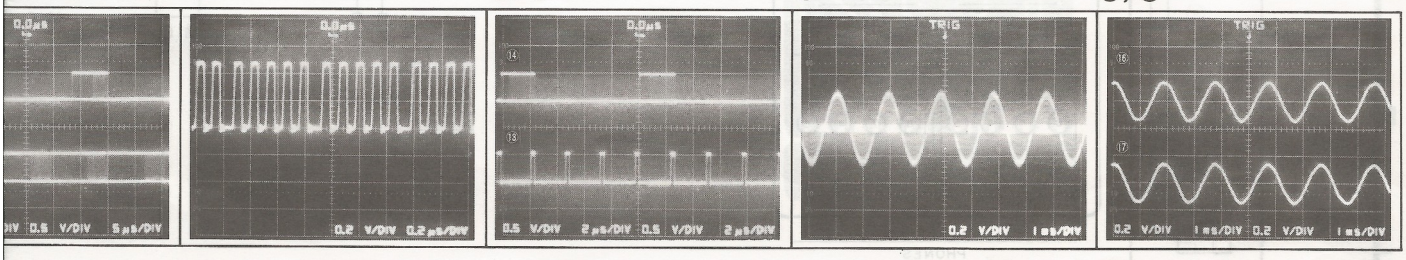

AS

• [M] [MC] [XM] areas SXPG211831 • [EZ] area SXPG211

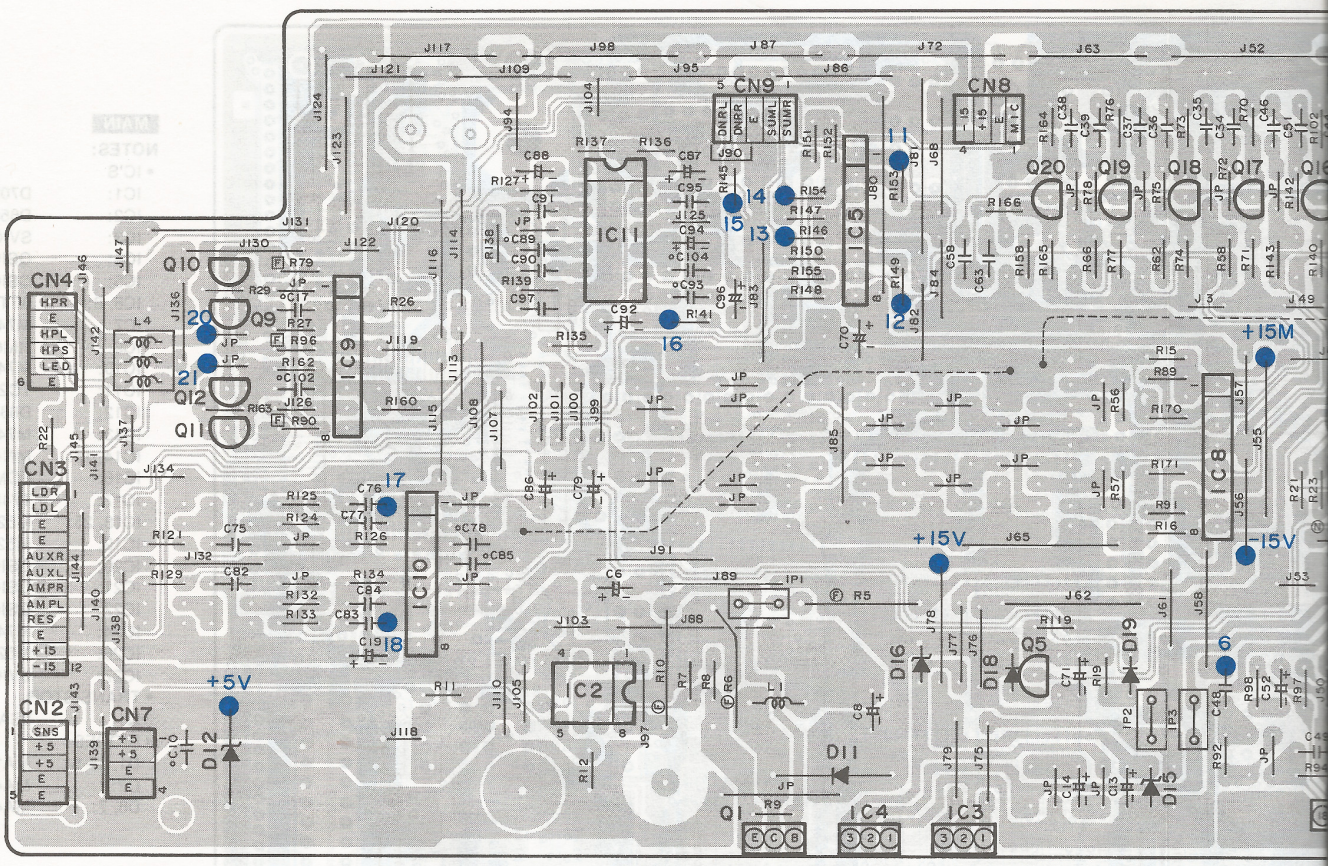

HP SXPG210831

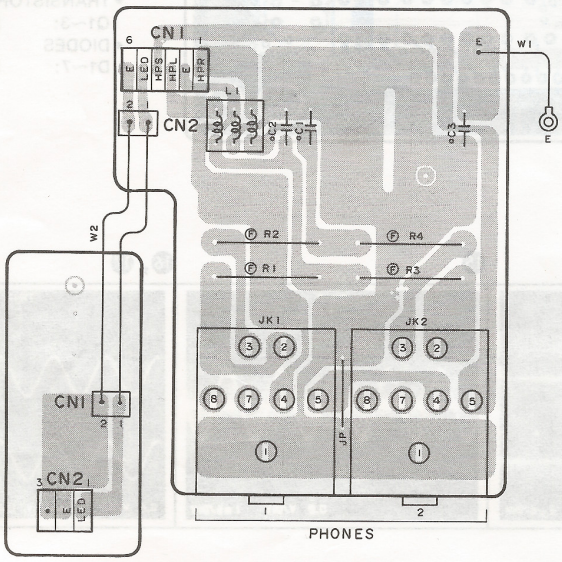

MIC

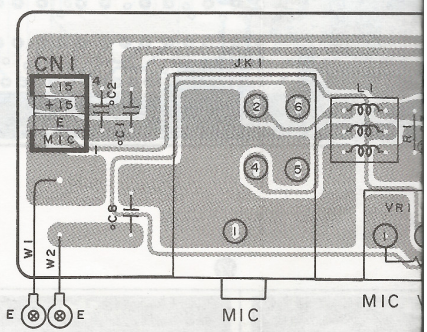

5 6 7 8 9 10

SXPG211841 • Other areas **SXPG211811**

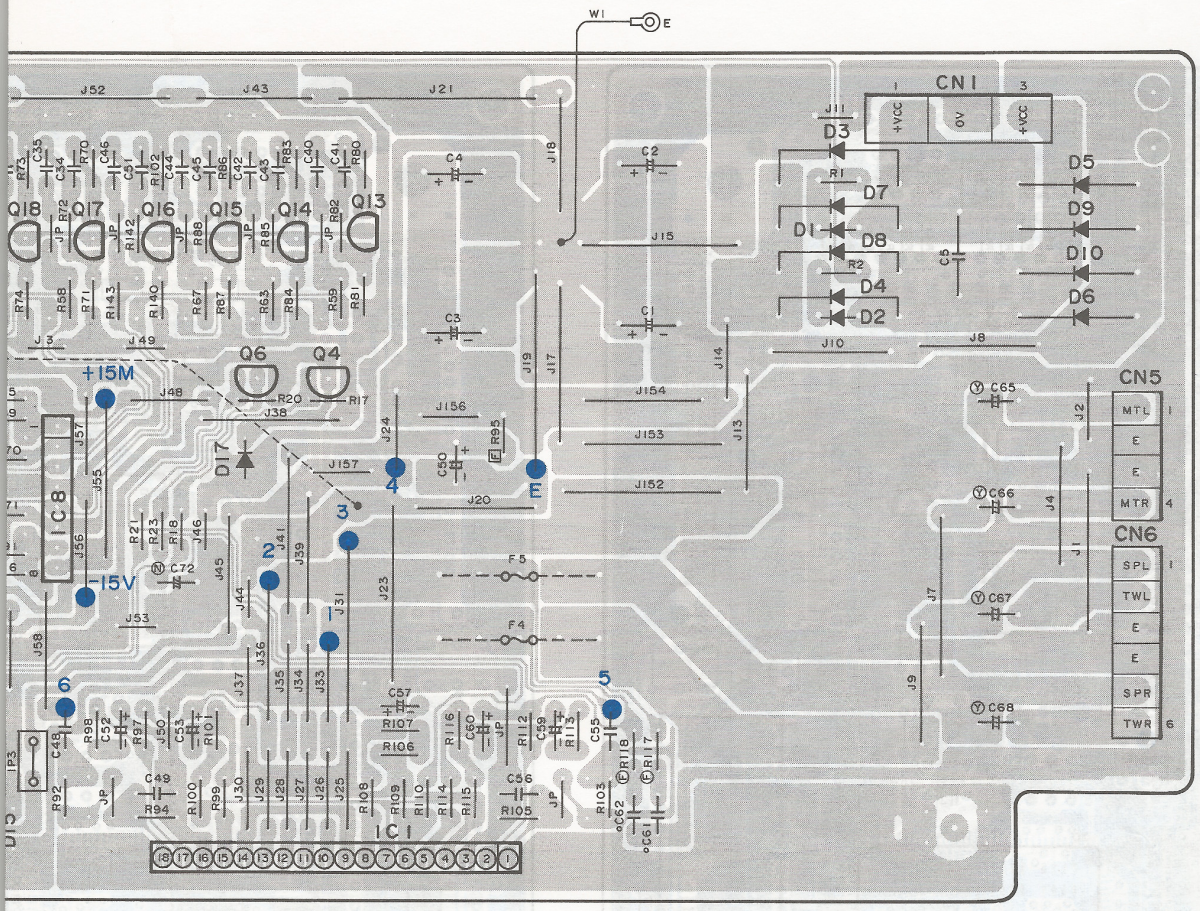

SXPG142231

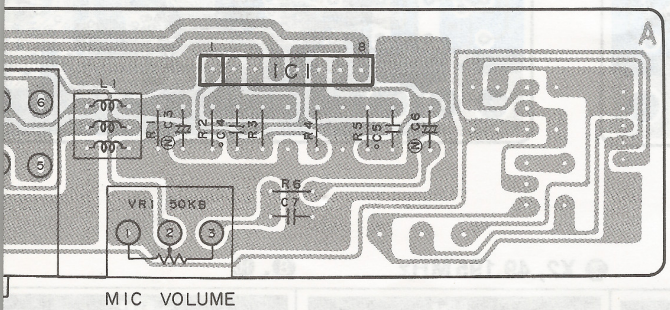

MIC VOLUME

NOTE:
- IC
  IC1: SVIGM5218L

AS

NOTES:
- IC'S
  - IC1: SVIGS4172M2M
  - IC2: SVIGM5291P
  - IC3: SVIGM5F7815
  - IC4: SVIGM5F7915
  - IC5, 8~10: SVIGM5218L
  - IC11: SVIGLM1894N
- TRANSISTORS
  - Q1: 2SA1643
  - Q4, 6, 13~20: 2SA1015-GR
  - Q5: 2SC1815GR
  - Q9, 12: 2SA1534ARS
  - Q10, 11: 2SC3940ARS
- DIODES
  - D1, 2: SVDGERA1502
  - D3~10: SVDGS3V20
  - D11: SVDGRK14S
  - D12: MA2062LF
  - D15, 16: MA4200
  - D17: EK04
  - D18, 19: MA165TA5
- FUSES
  - F4, 5: XBA1C50NU100
    M MC XM
  - F4, 5: XBA2C40TB0
    Others

TCF [M] [MC] [XM] areas — SXPG212831

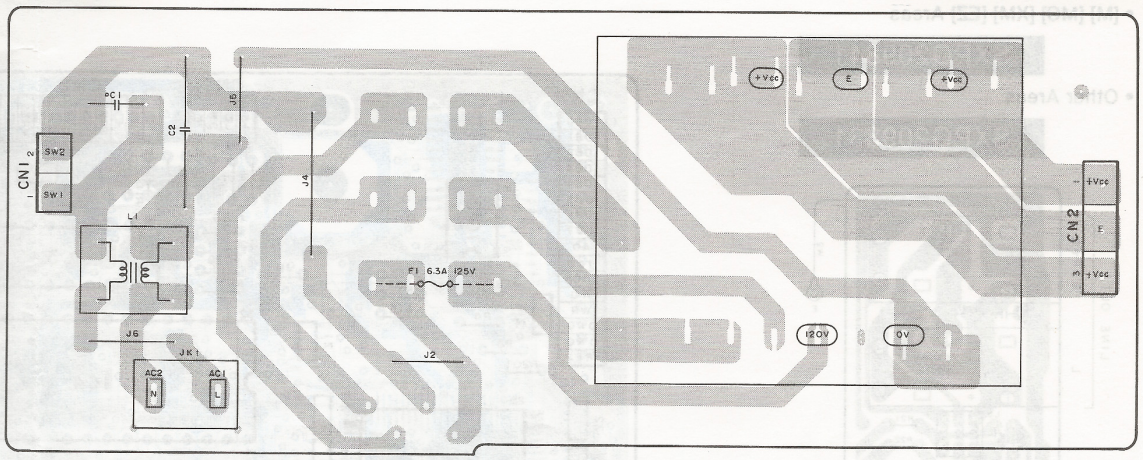

• FUSE F1: XBA1C63NU100

TCF [EK] [X] [XR] [XS] [XT] [XD] areas — SXPG212841

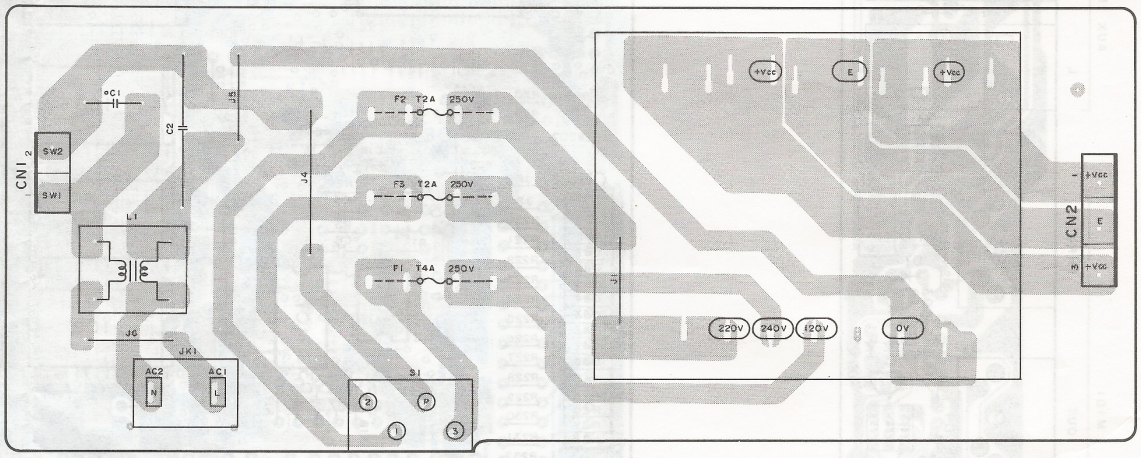

• FUSE F1: XBA2C40TB0
F2, 3: XBA2C20TB0

TCF Other areas — SXPG212811

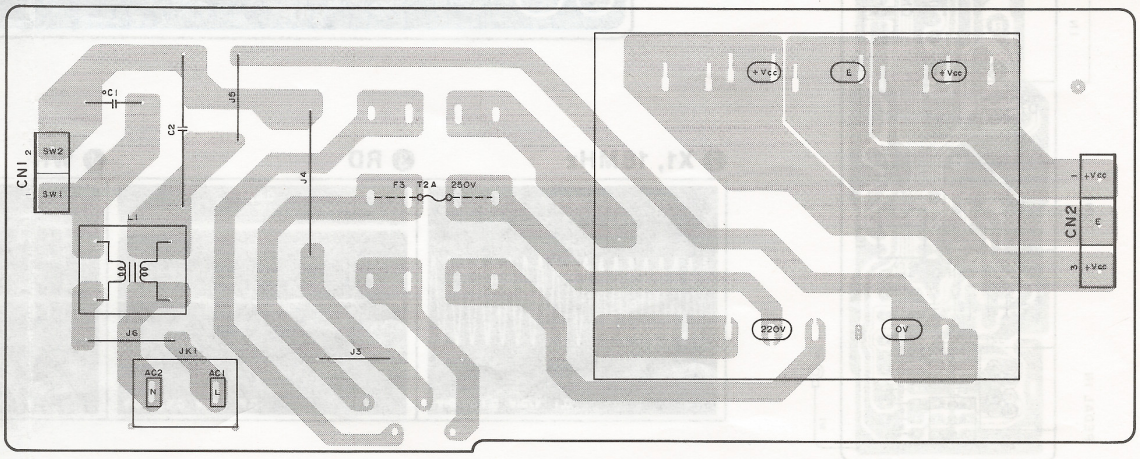

• FUSE F1: XBA2C20TB0

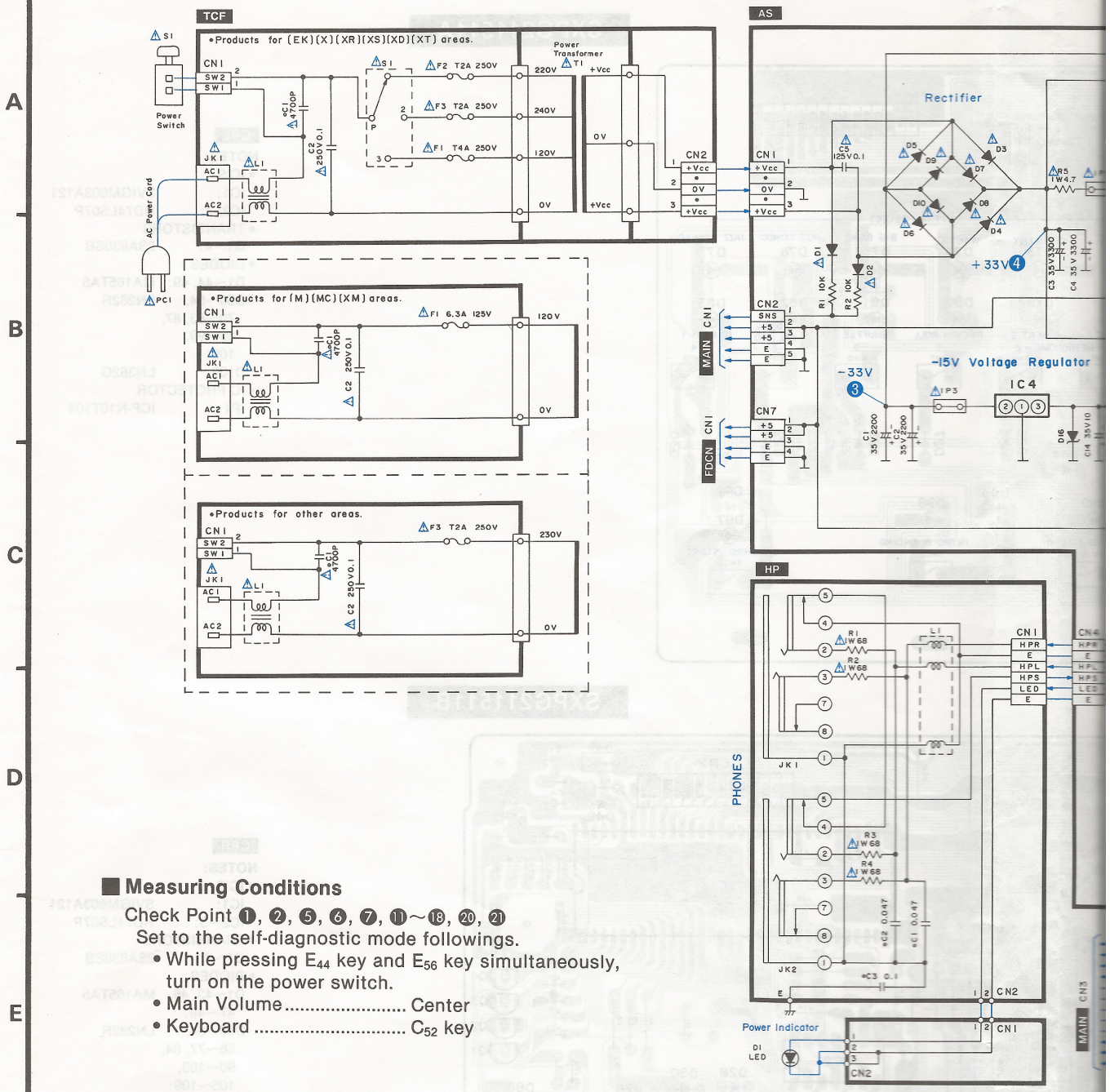

■ Measuring Conditions

Check Point ❶, ❷, ❺, ❻, ❼, ⓫~⓲, ⓴, ㉑
Set to the self-diagnostic mode followings.

- While pressing E_{44} key and E_{56} key simultaneously, turn on the power switch.
- Main Volume ..... Center
- Keyboard ..... C_{52} key

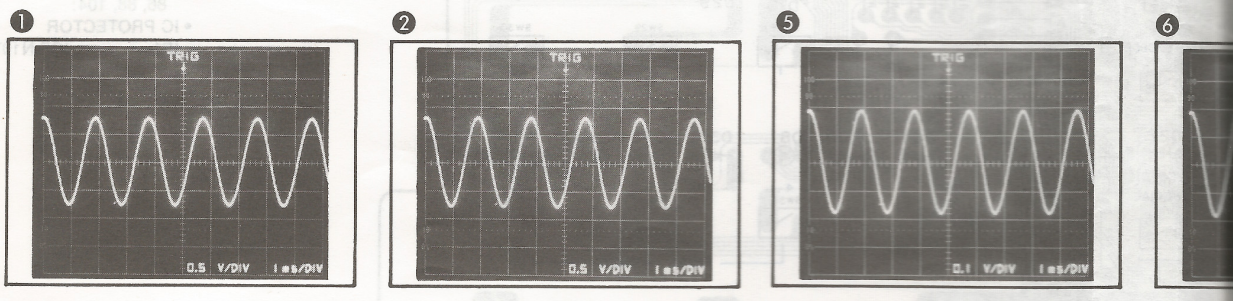

PLY, TRANSFORMER & FUSE, MICROPHONE AND HEADPHONE C

5 6 7 8 9 1

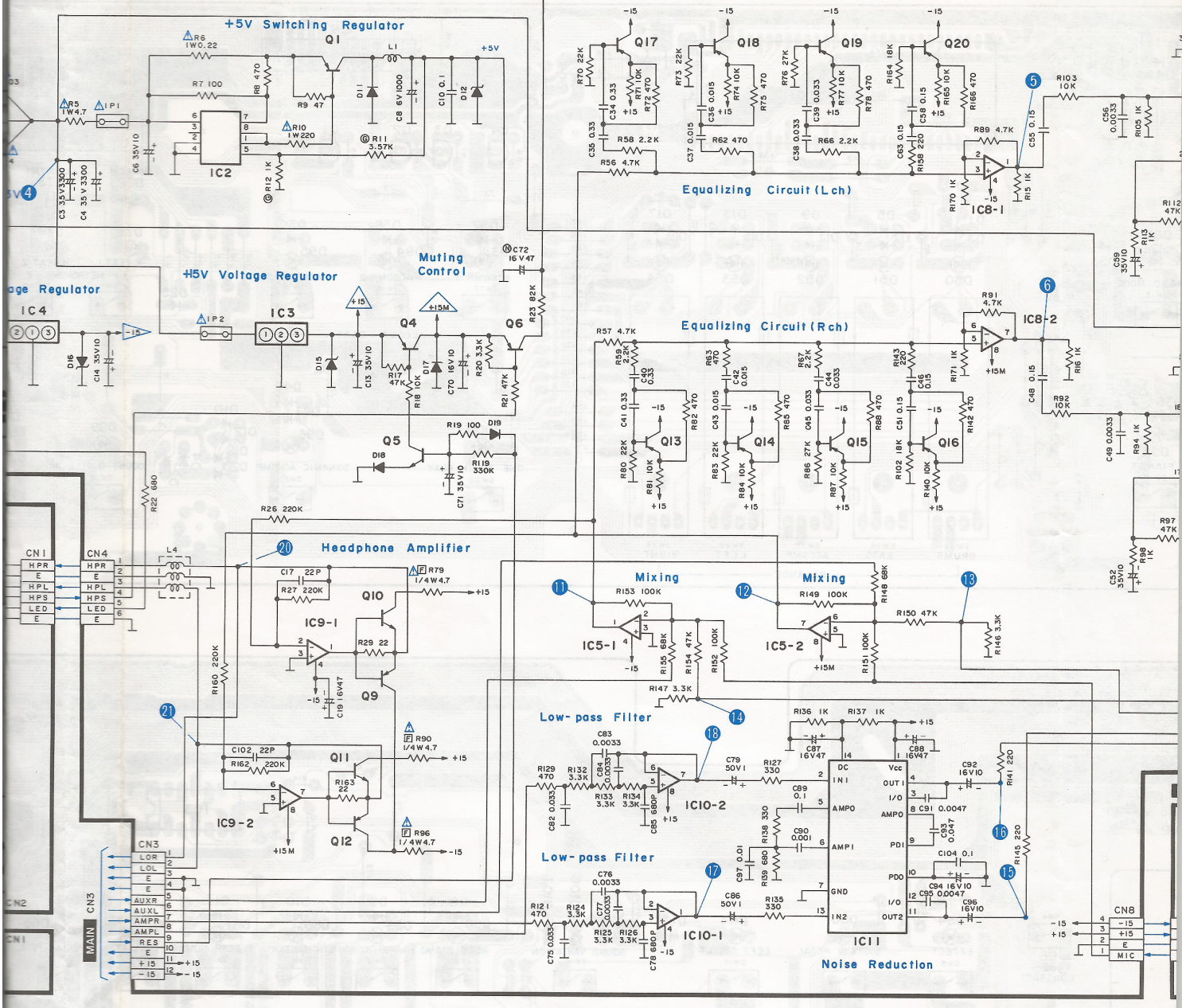

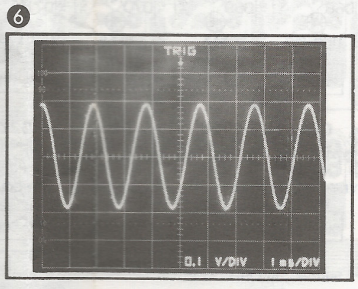

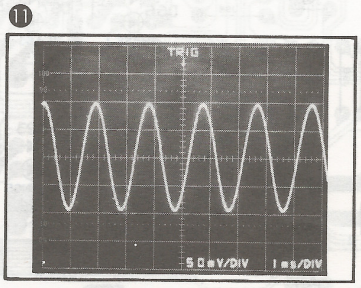

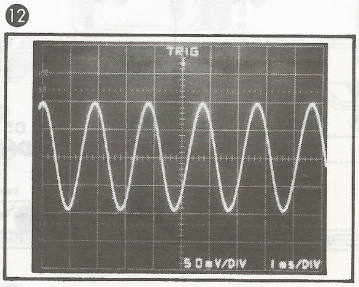

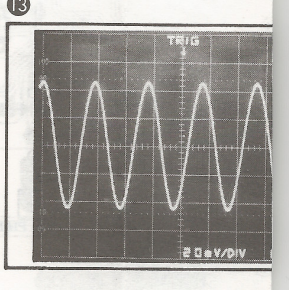

ONE CIRCUIT DIAGRAM

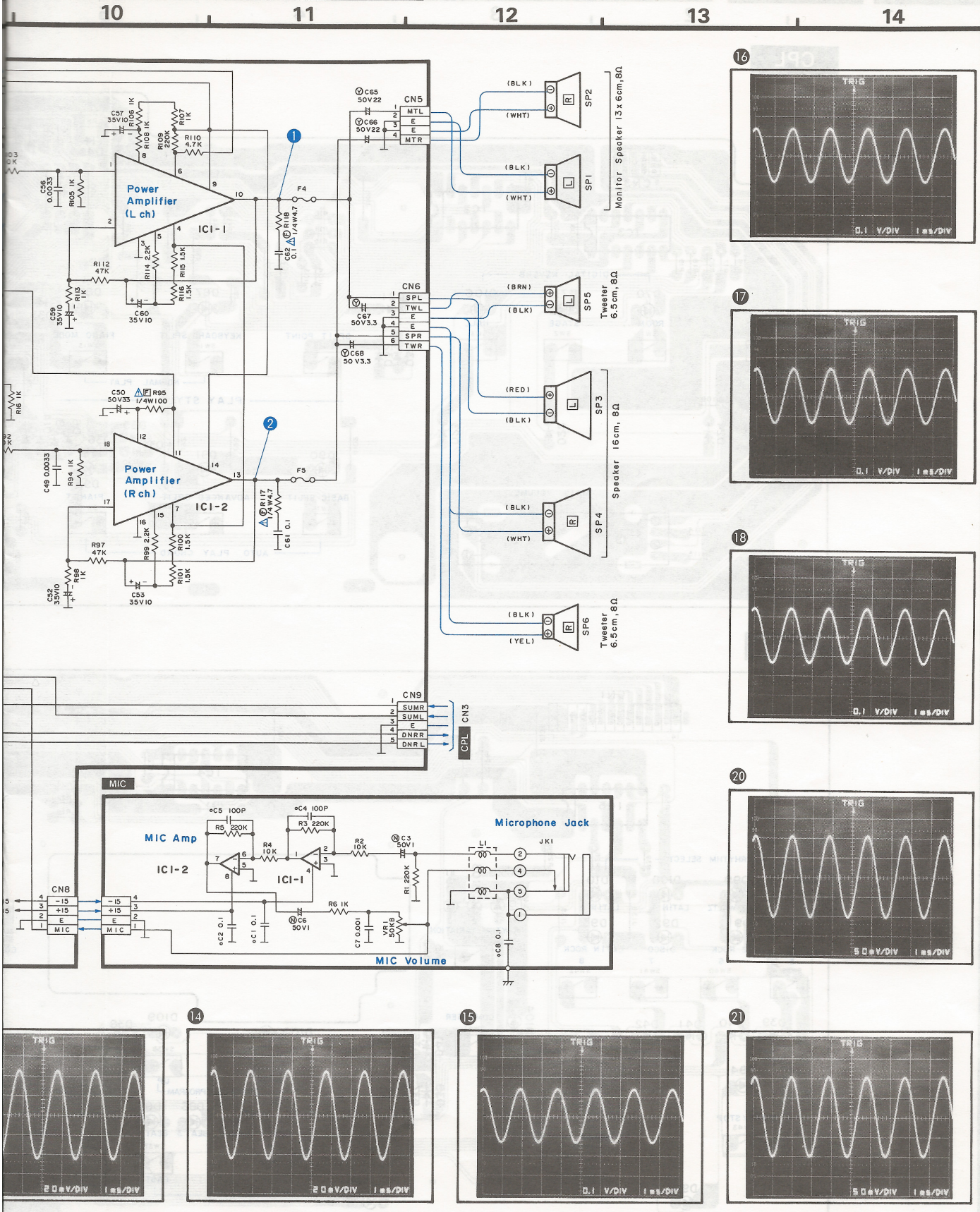

16

17

18

20

14

15

21

CPL CPR CONTROL PANEL LEFT AND RIGHT CIRCUI

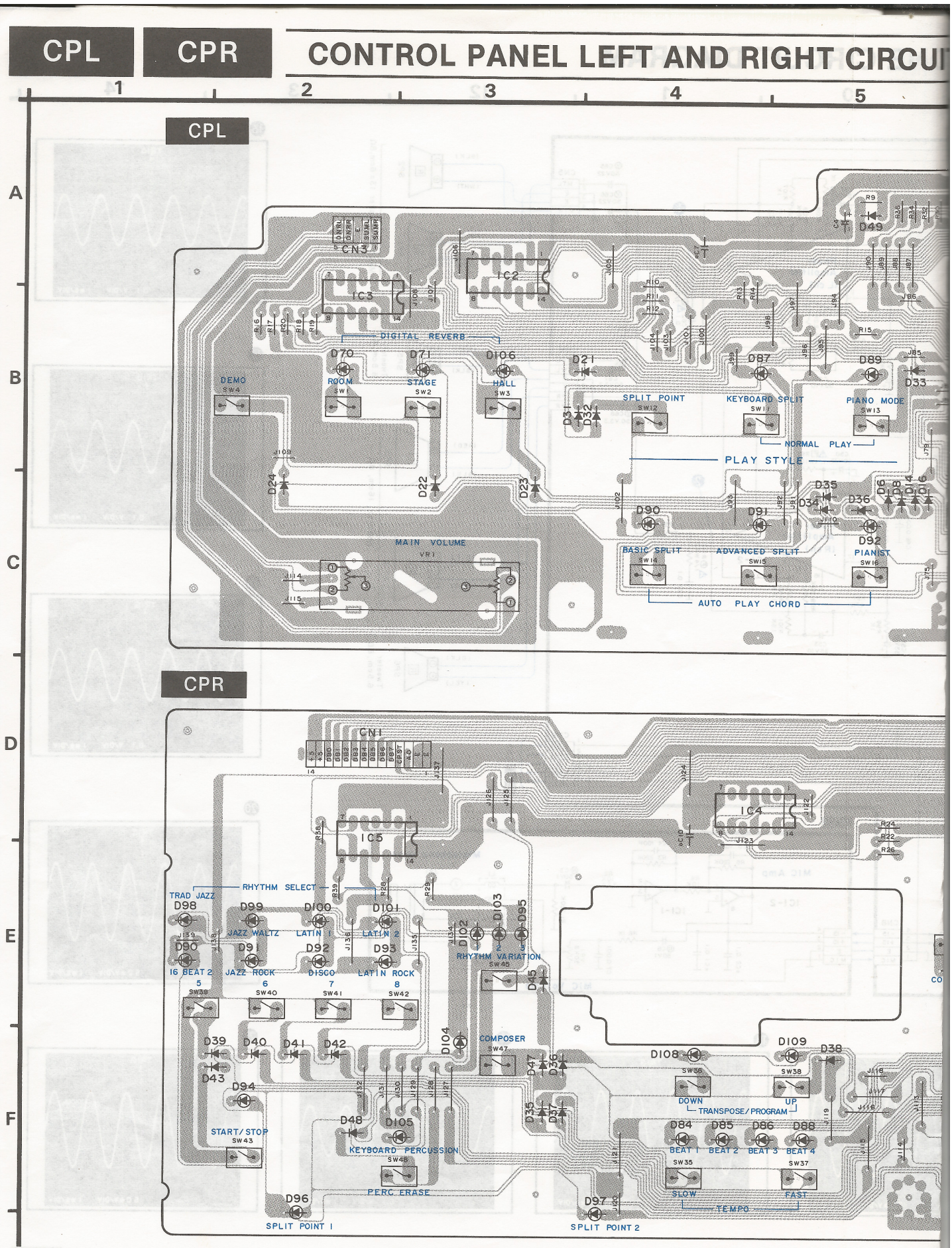

CIRCUIT BOARD

5 6 7 8 9 10

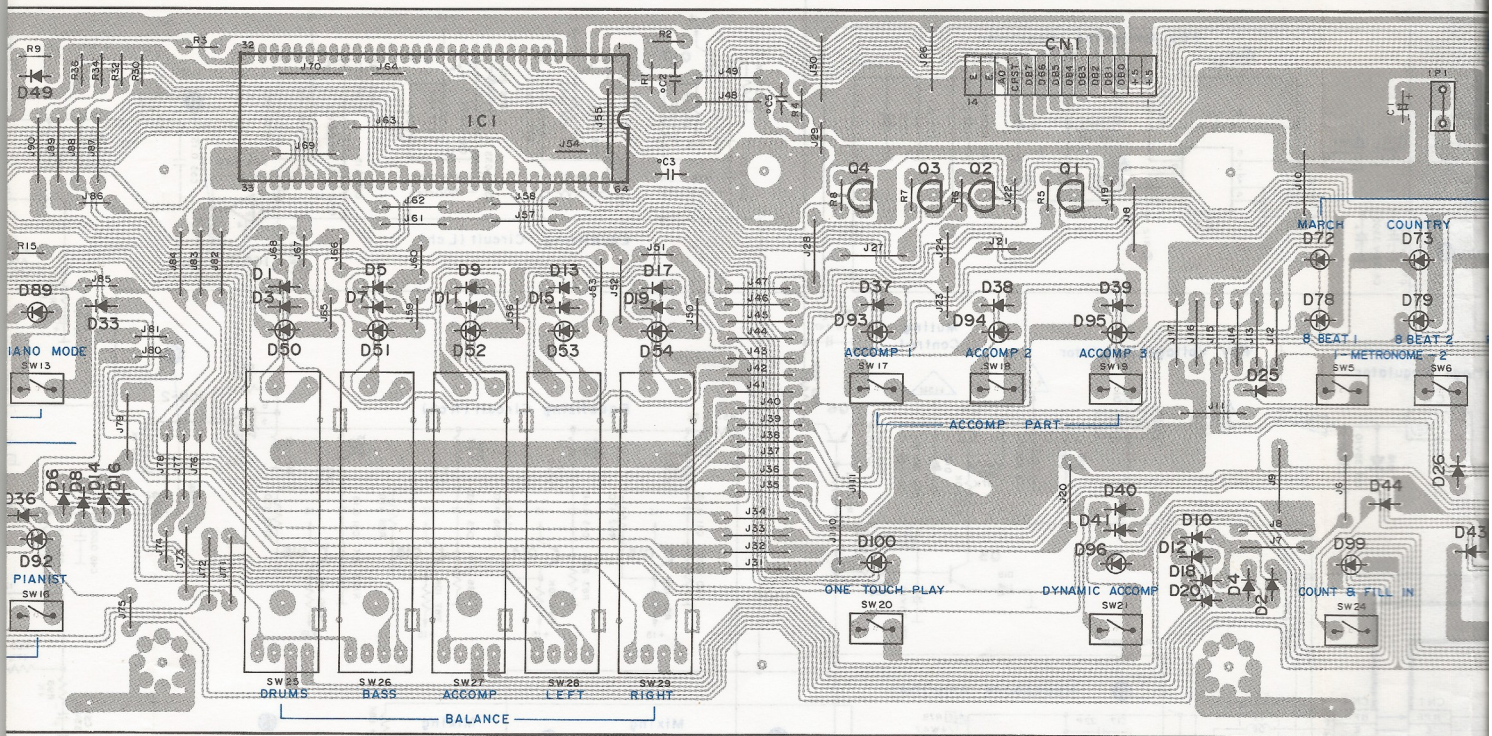

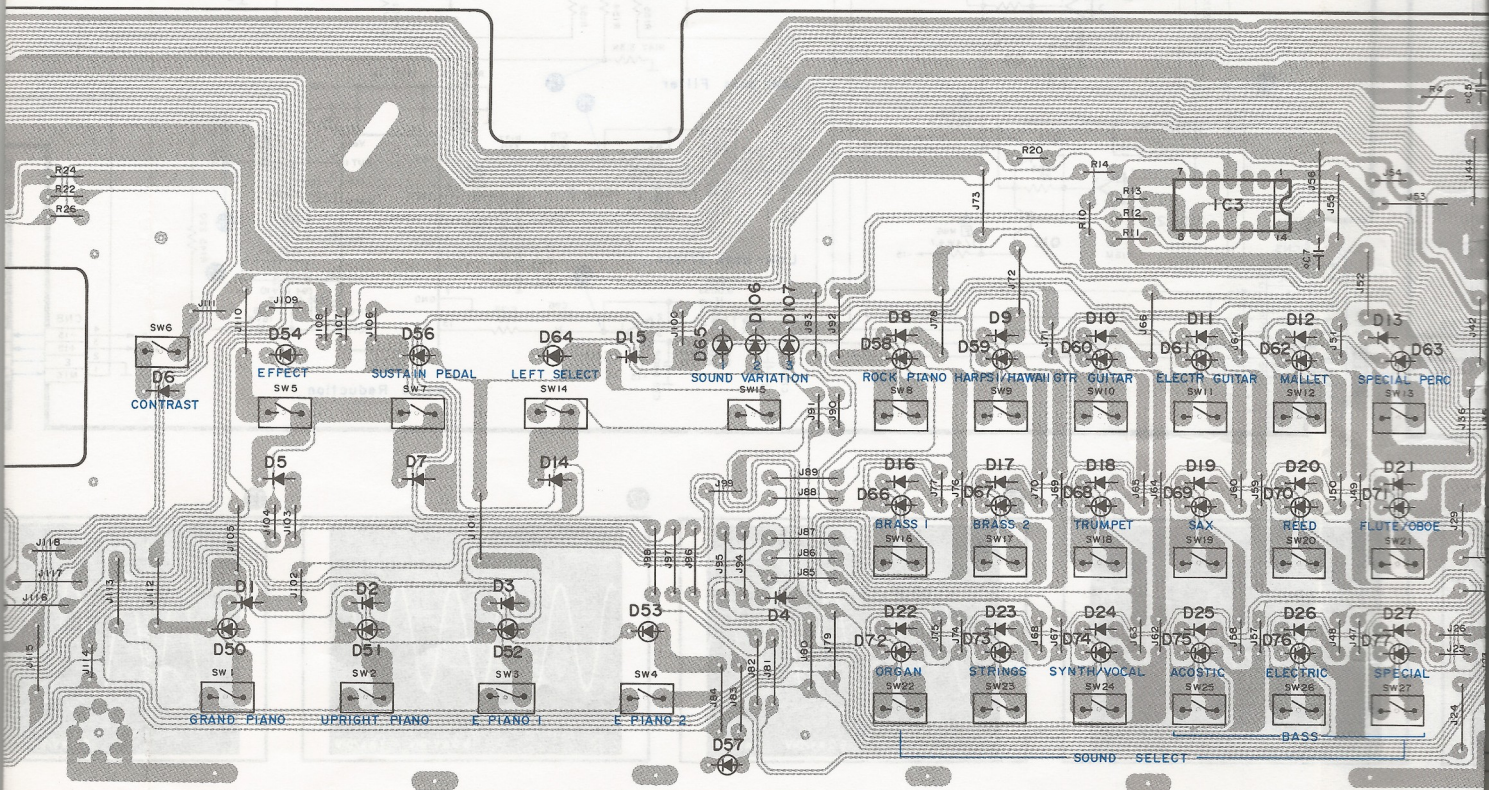

10 11 12 13 14

SXPG211511A

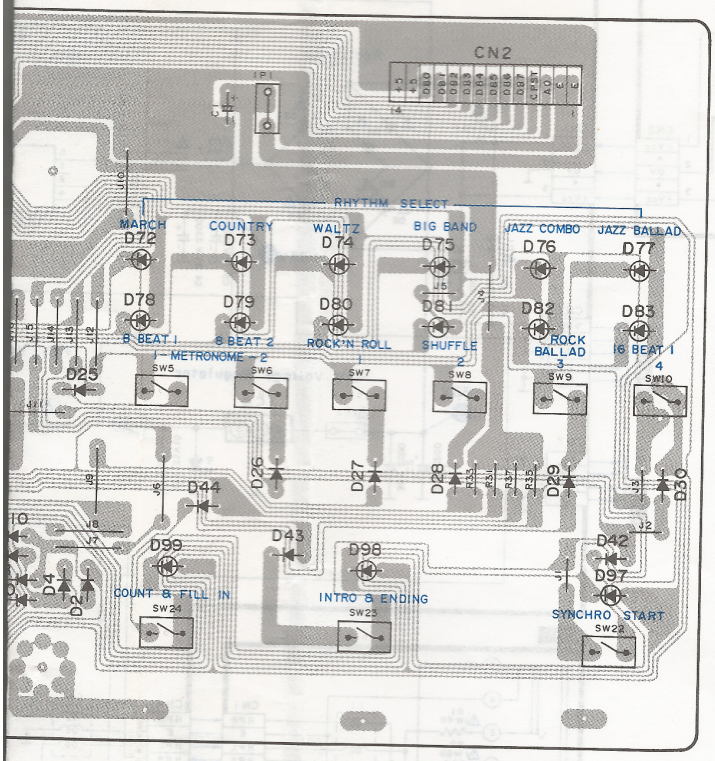

CPL

NOTES:

- IC'S
  - IC1: SVIGM603A121
  - IC2, 3: HD74LS07P
- TRANSISTORS
  - Q1~4: 2SA830SB
- DIODES
  - D1~44, 49: MA165TA5
  - D50~54, 70~83, 87, 89~99, 106: LN282R
  - D100: LN382G
- IC PROTECTOR
  - IP1: ICP-N10T104

SXPG211511B

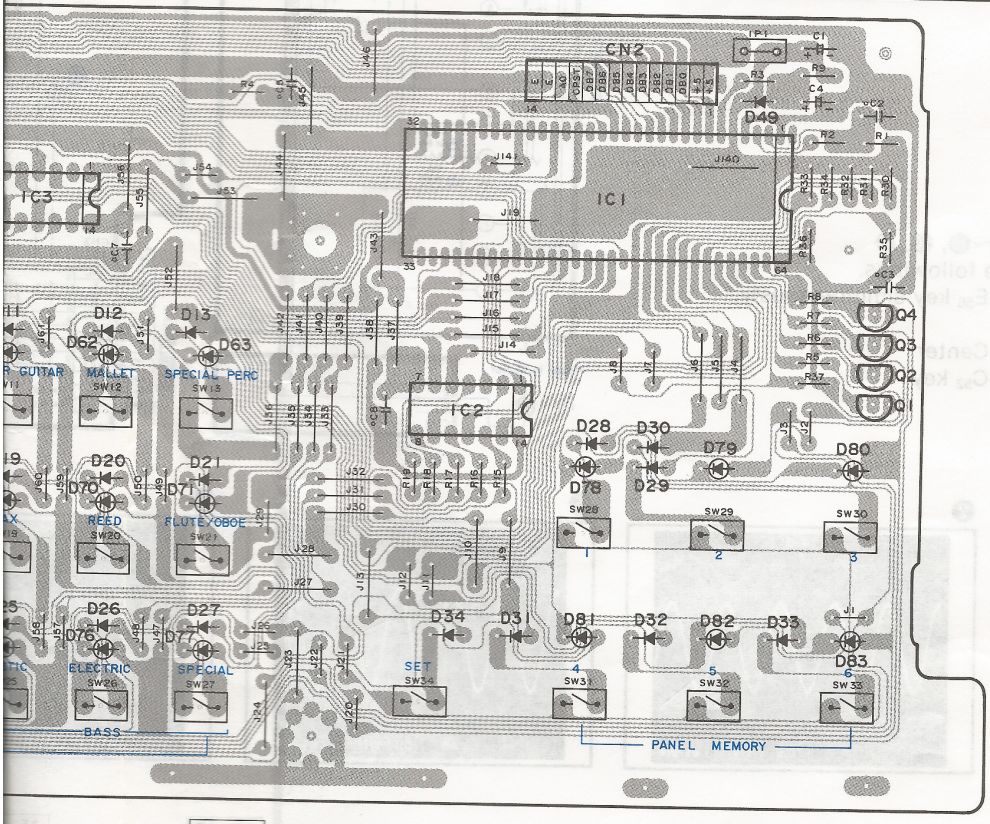

CPR

NOTES:

- IC'S
  - IC1: SVIGM603A121
  - IC2~5: HD74LS07P
- TRANSISTORS
  - Q1~4: 2SA830SB
- DIODES
  - D1~43, 45, 47~49: MA165TA5
  - D50~54, 56~77, 84, 90~103, 105~109: LN282R
  - D78~83, 85, 86, 88, 104: LN382G
- IC PROTECTOR
  - IP1: ICP-N10T104

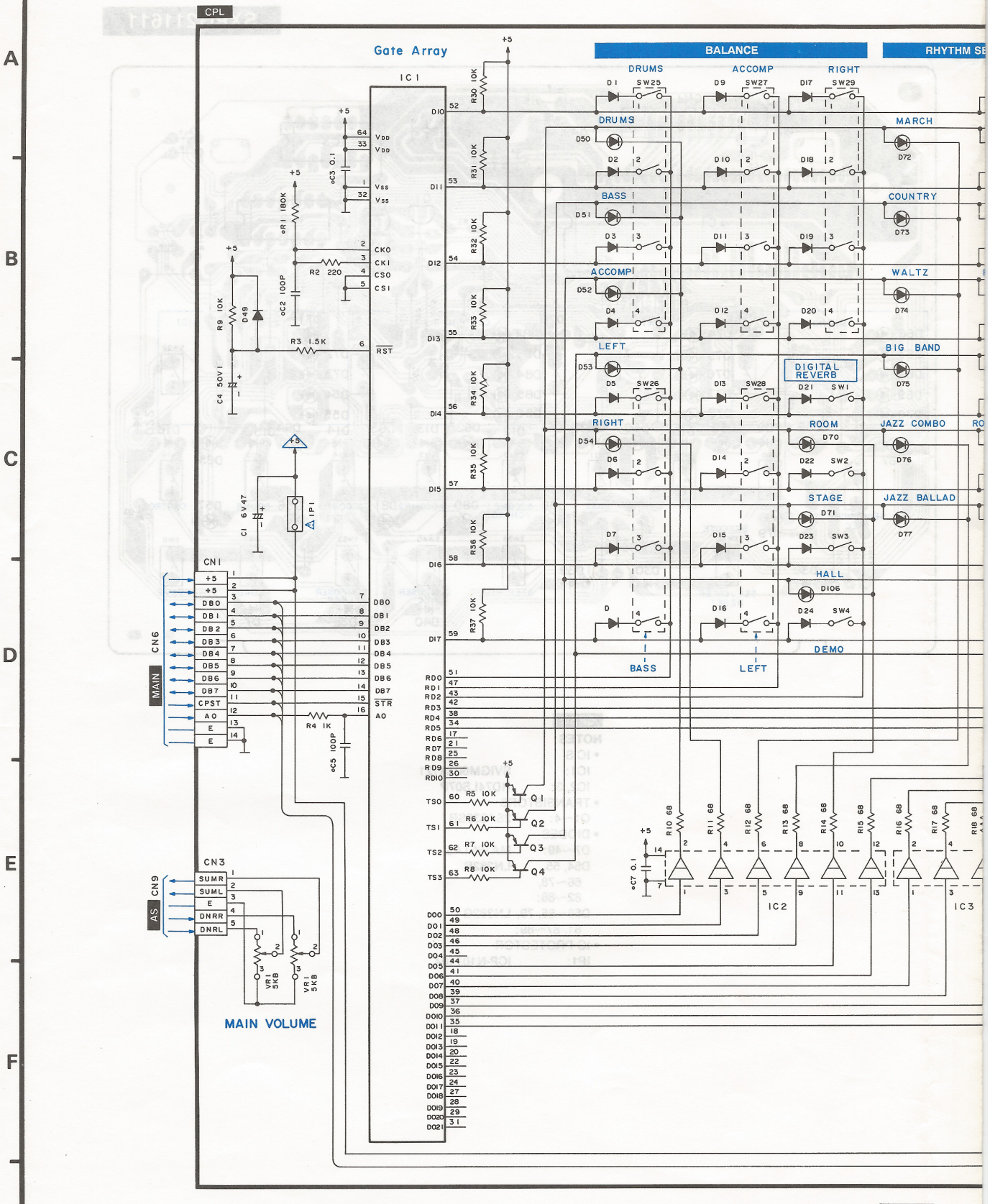
CPL
Gate Array
IC1
BALANCE
RHYTHM SE
DRUMS
ACCOMP
RIGHT
BASS
LEFT
MARCH
COUNTRY
WALTZ
BIG BAND
JAZZ COMBO
JAZZ BALLAD
DIGITAL REVERB
ROOM
STAGE
HALL
DEMO
CN1
CN6
MAIN
CN3
CN9
AS
MAIN VOLUME
IC2
IC3

IRCUIT DIAGRAM

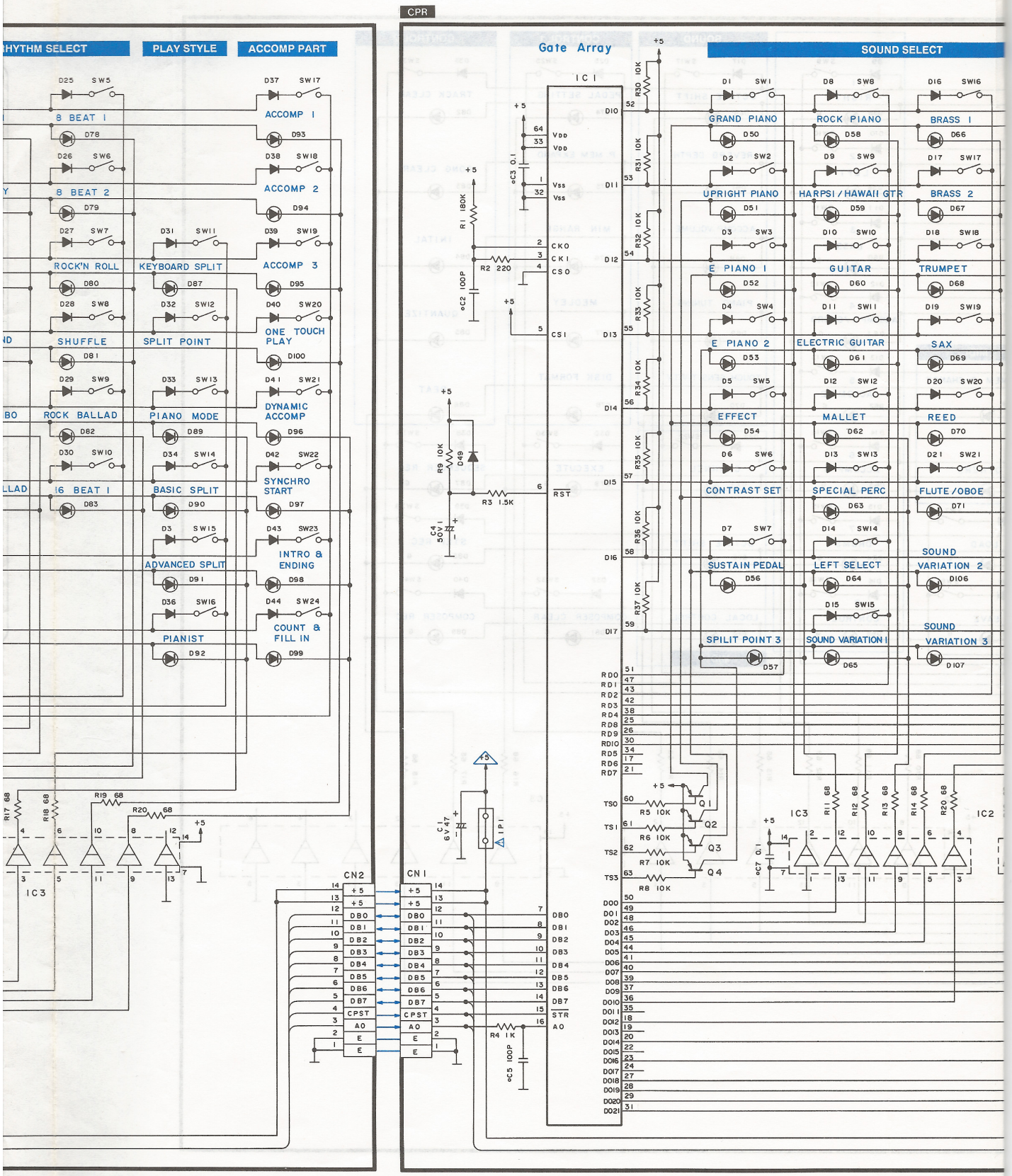

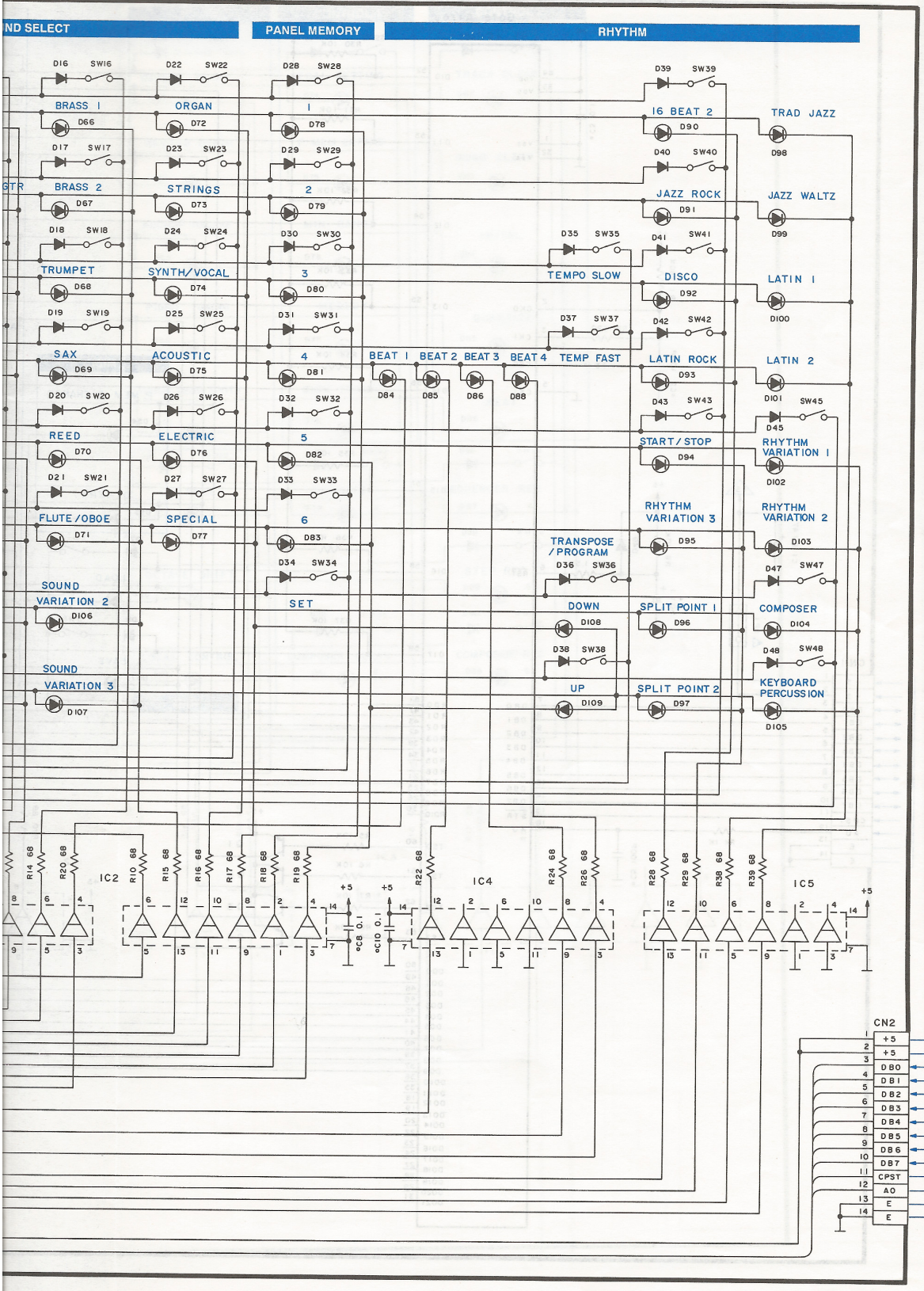
ND SELECT
PANEL MEMORY
RHYTHM
BRASS 1
BRASS 2
TRUMPET
SAX
REED
FLUTE/OBOE
SOUND VARIATION 2
SOUND VARIATION 3
ORGAN
STRINGS
SYNTH/VOCAL
ACOUSTIC
ELECTRIC
SPECIAL
SET
1
2
3
4
5
6
BEAT 1
BEAT 2
BEAT 3
BEAT 4
TEMP FAST
TEMPO SLOW
TRANSPOSE / PROGRAM
DOWN
UP
16 BEAT 2
JAZZ ROCK
DISCO
LATIN ROCK
START/STOP
RHYTHM VARIATION 3
SPLIT POINT 1
SPLIT POINT 2
TRAD JAZZ
JAZZ WALTZ
LATIN 1
LATIN 2
RHYTHM VARIATION 1
RHYTHM VARIATION 2
COMPOSER
KEYBOARD PERCUSSION
IC2
IC4
IC5
CN2
CN1
CPSO
+5
DB0
DB1
DB2
DB3
DB4
DB5
DB6
DB7
CPST
A0
E

CPSQ SEQUENCER CONTROL CIRCUIT

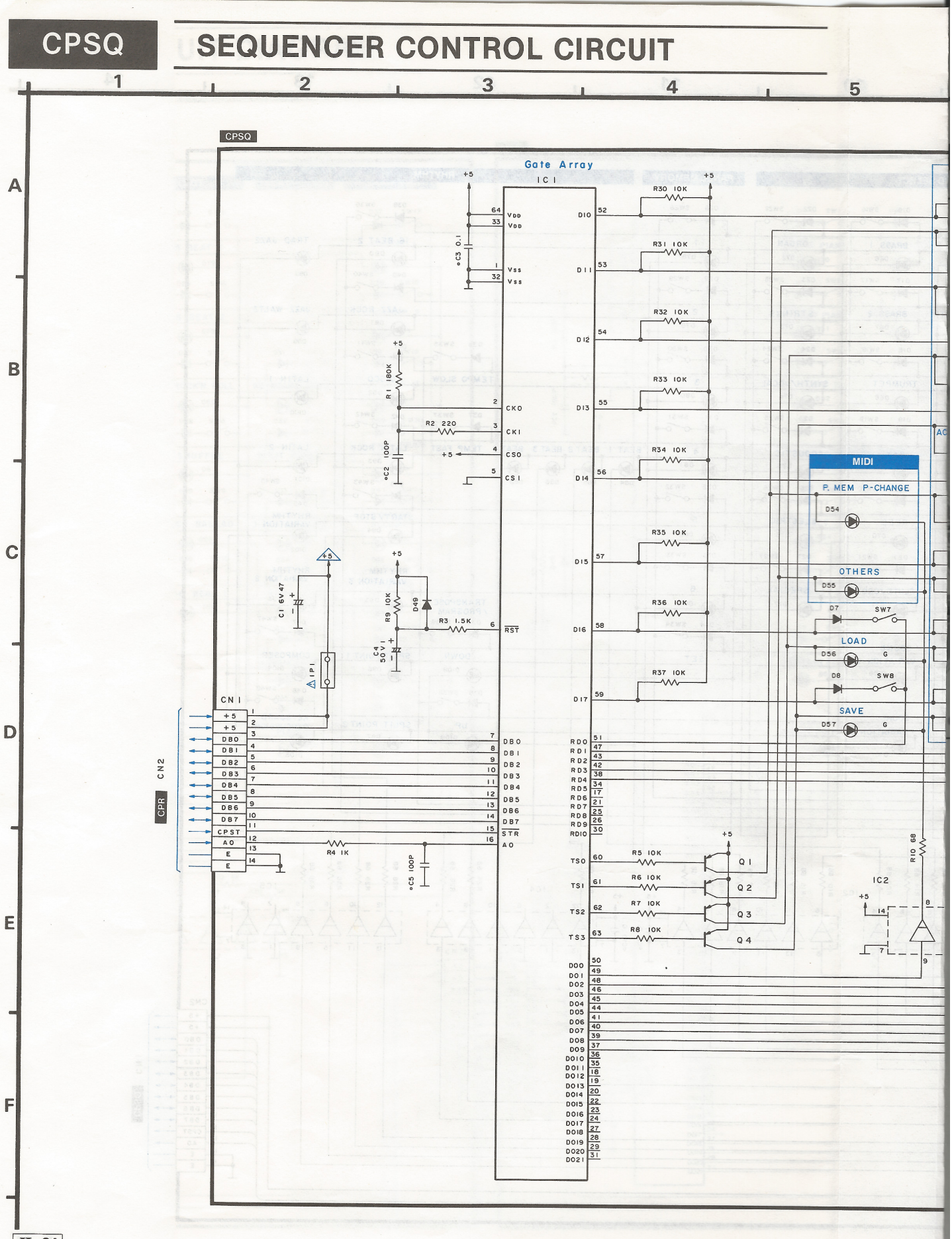

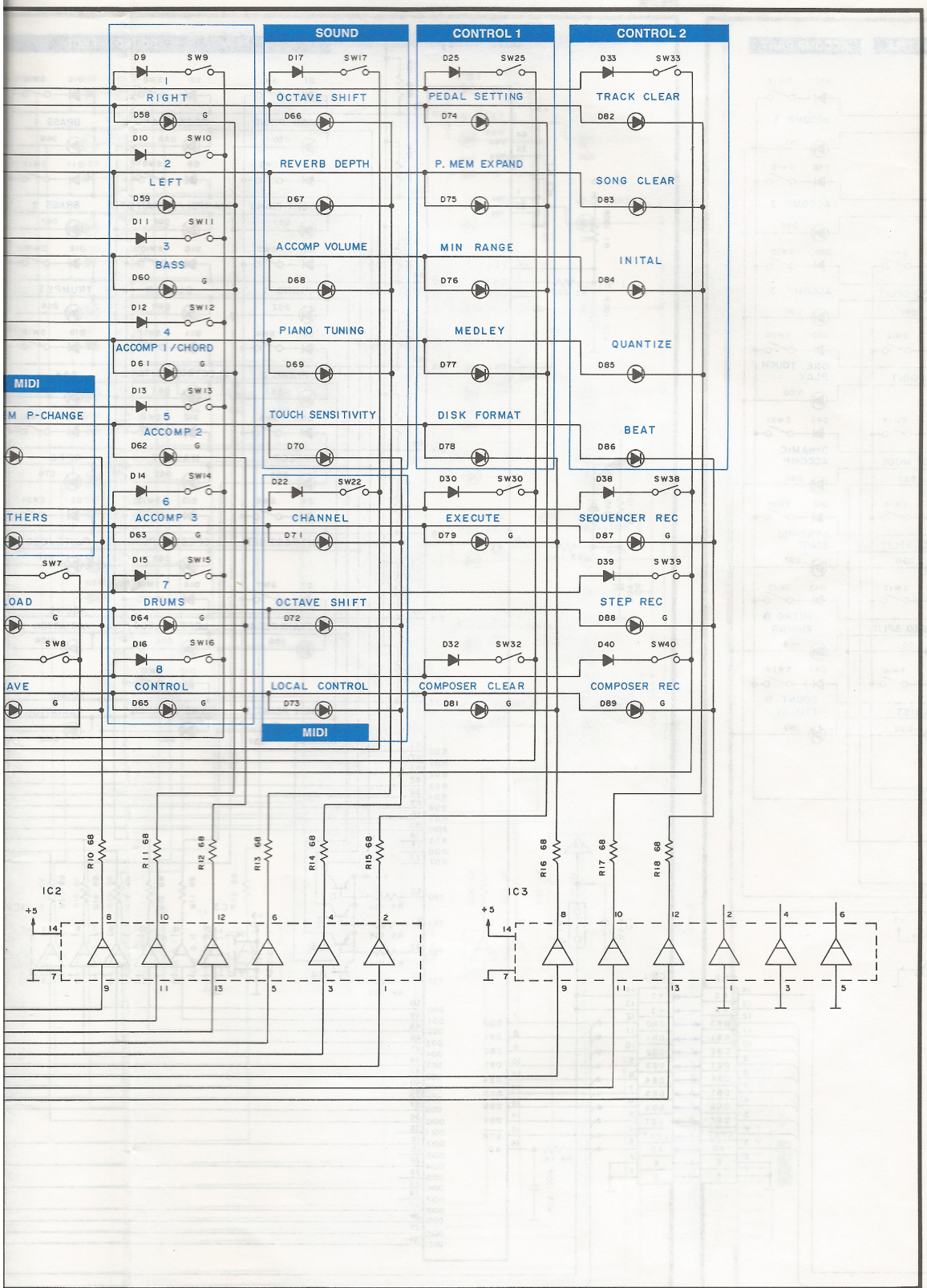
SOUND
CONTROL 1
CONTROL 2
MIDI
RIGHT
LEFT
BASS
ACCOMP 1/CHORD
ACCOMP 2
ACCOMP 3
DRUMS
CONTROL
OCTAVE SHIFT
REVERB DEPTH
ACCOMP VOLUME
PIANO TUNING
TOUCH SENSITIVITY
CHANNEL
OCTAVE SHIFT
LOCAL CONTROL
PEDAL SETTING
P. MEM EXPAND
MIN RANGE
MEDLEY
DISK FORMAT
EXECUTE
COMPOSER CLEAR
TRACK CLEAR
SONG CLEAR
INITAL
QUANTIZE
BEAT
SEQUENCER REC
STEP REC
COMPOSER REC
IC2
IC3

SXPG211611

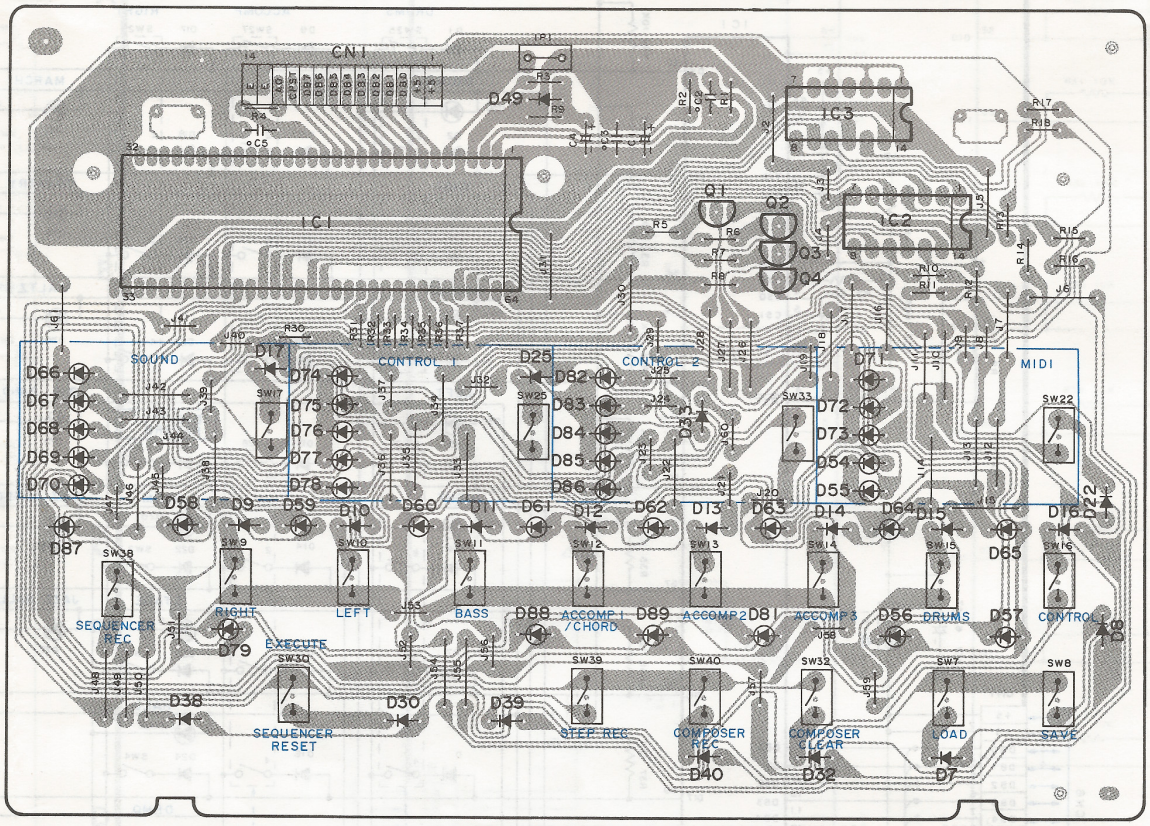

CPSQ

NOTES:

- IC'S
  - IC1: SVIGM603A121
  - IC2, 3: HD74LS07P
- TRANSISTORS
  - Q1~4: 2SA830SB
- DIODES
  - D7~49: MA165TA5
  - D54, 55, 66~78, 82~86: LN282R
  - D56~65, 79, 81, 87~89: LN382G
- IC PROTECTOR
  - IP1: ICP-N10T104

FDCN FDC FD CONNECTOR AND FD CONTROL CI

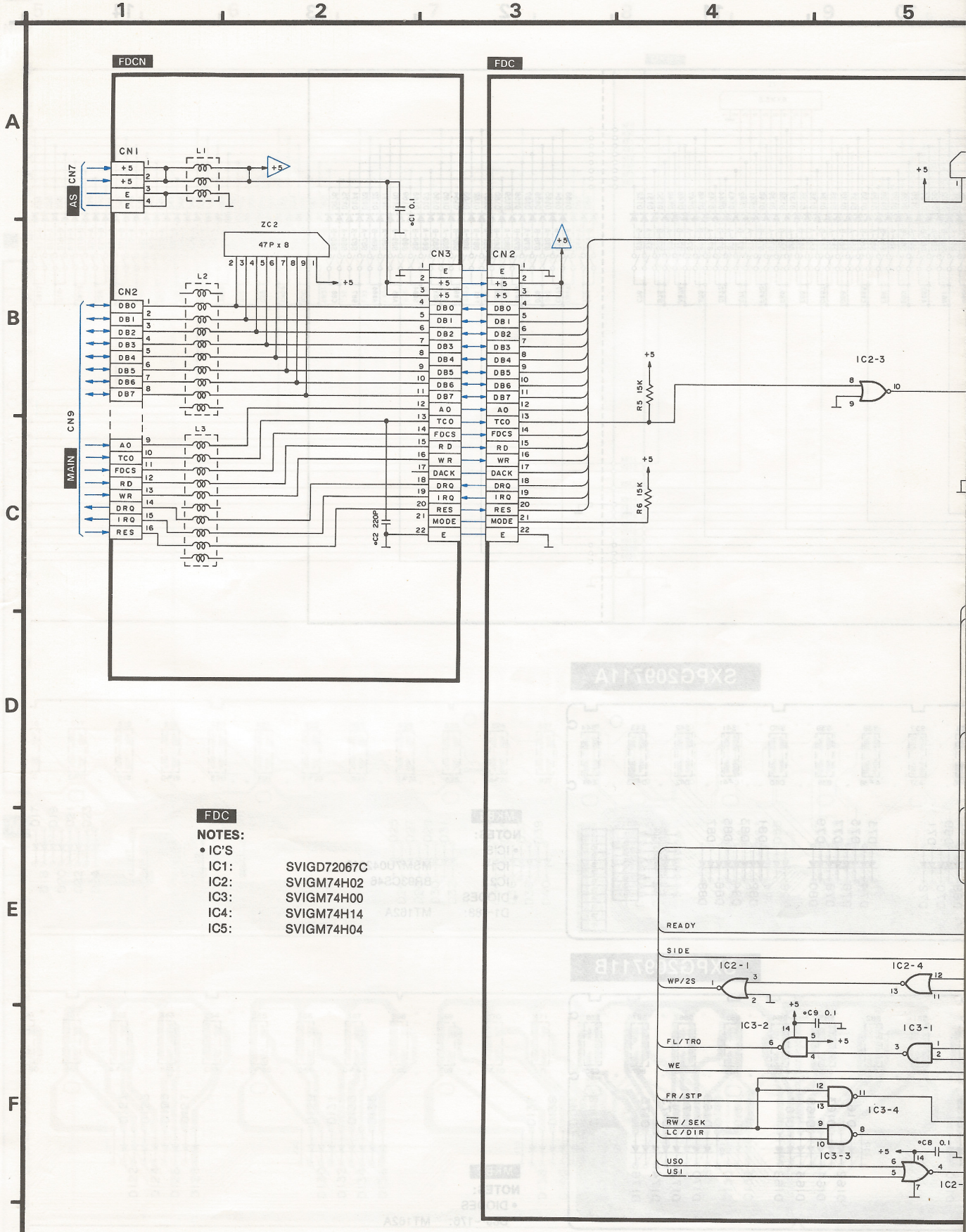

FDC

NOTES:

- IC'S

IC1:	SVIGD72067C
IC2:	SVIGM74H02
IC3:	SVIGM74H00
IC4:	SVIGM74H14
IC5:	SVIGM74H04

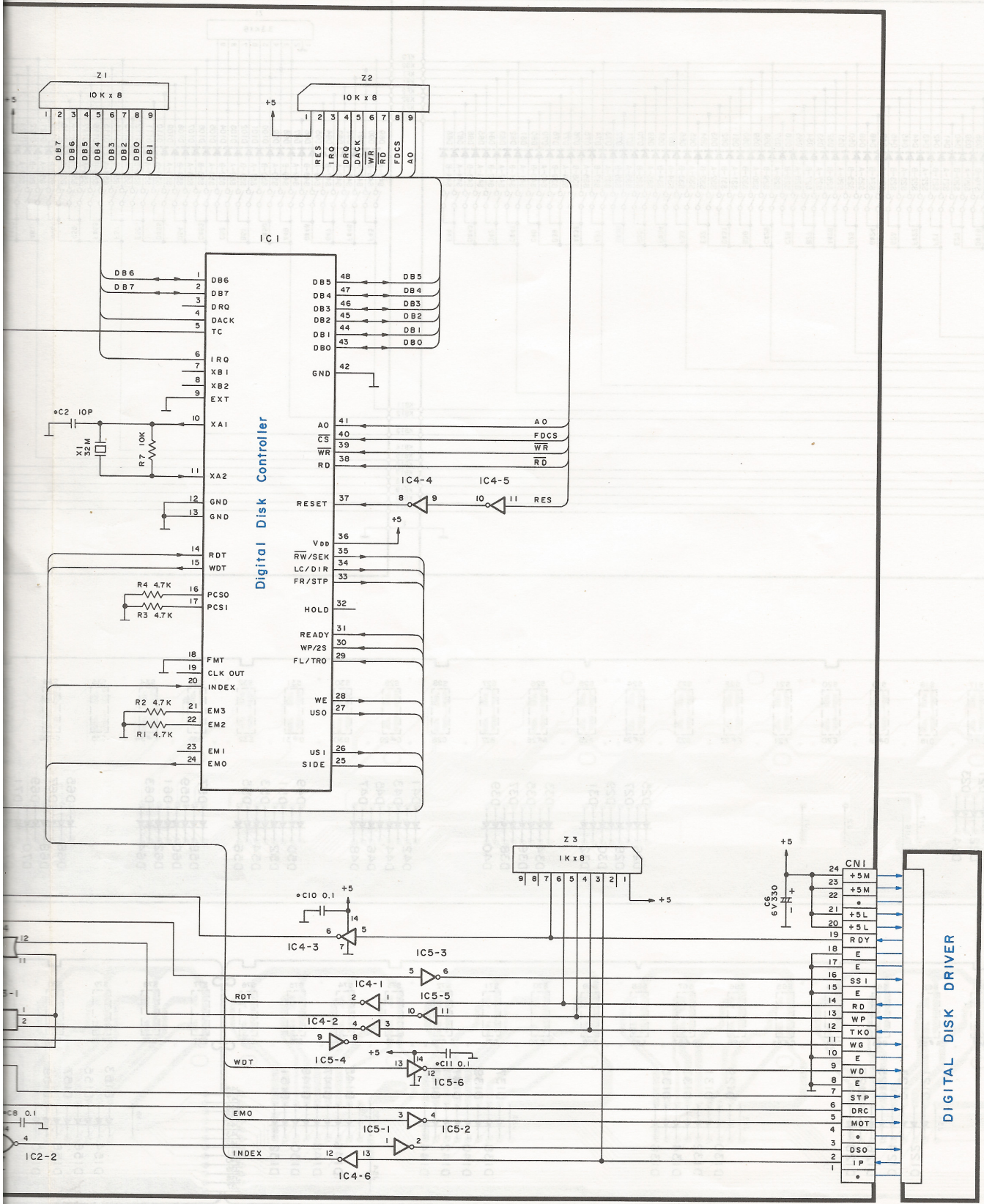
6
7
8
9
10
Z1
10K x 8
Z2
10K x 8
+5
DB7 DB6 DB5 DB4 DB3 DB2 DB0 DB1
RES IRQ DRQ DACK WR RD FDCS A0
IC1
Digital Disk Controller
DB6
DB7
DRQ
DACK
TC
IRQ
XB1
XB2
EXT
XA1
XA2
GND
GND
RDT
WDT
PCS0
PCS1
FMT
CLK OUT
INDEX
EM3
EM2
EM1
EM0
DB5
DB4
DB3
DB2
DB1
DB0
GND
A0
CS
WR
RD
RESET
VDD
RW/SEK
LC/DIR
FR/STP
HOLD
READY
WP/2S
FL/TRO
WE
US0
US1
SIDE
C2 10P
X1 32M
R7 10K
R4 4.7K
R3 4.7K
R2 4.7K
R1 4.7K
IC4-4
IC4-5
RES
FDCS
WR
RD
A0
Z3
1K x 8
C10 0.1
IC4-3
IC5-3
IC4-1
IC5-5
IC4-2
IC5-4
IC5-6
C11 0.1
IC5-1
IC5-2
IC4-6
IC2-2
C8 0.1
RDT
WDT
EMO
INDEX
CN1
+5M
+5M
+5L
+5L
RDY
E
E
SS1
E
RD
WP
TK0
WG
E
WD
E
STP
DRC
MOT
DS0
IP
DIGITAL DISK DRIVER

FDCN

SXPG212711

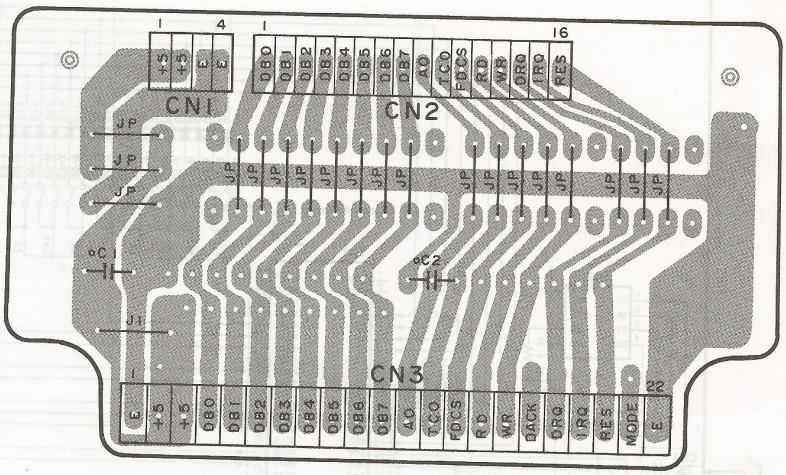

FDC

SXPG208311

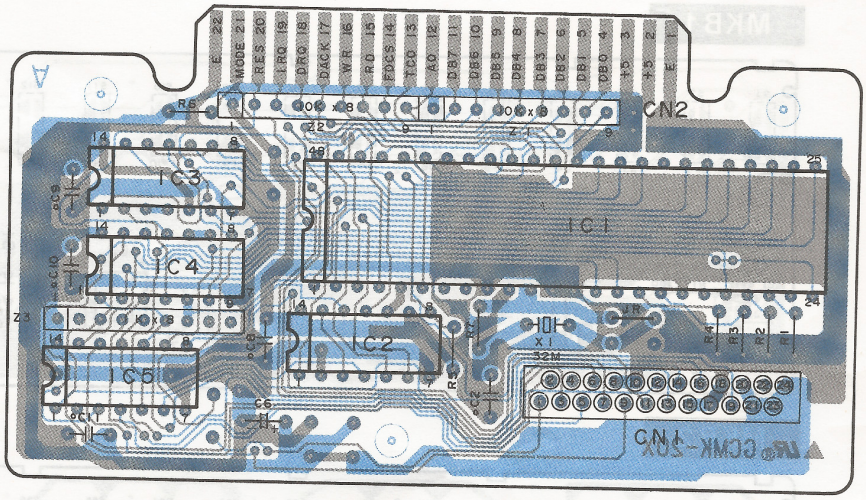

Circuit view on top of P.C.B.

NOTES:

- IC'S

IC1:	SVIGD72067C
IC2:	SVIGM74H02
IC3:	SVIGM74H00
IC4:	SVIGM74H14
IC5:	SVIGM74H04

MKB1 MKB2 MANUAL KEYBOARD 1 AND 2 CIRCUIT

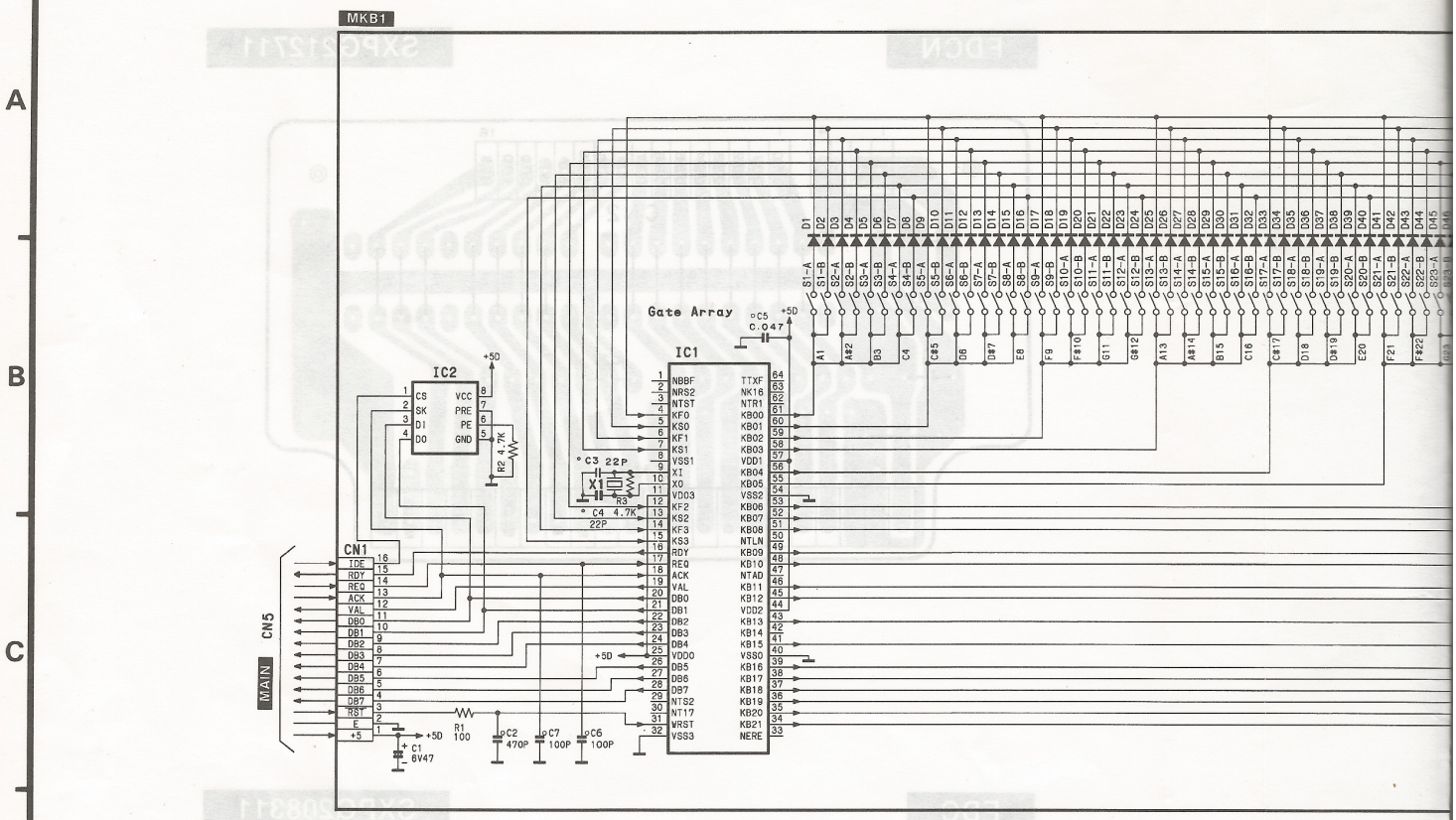

MKB1

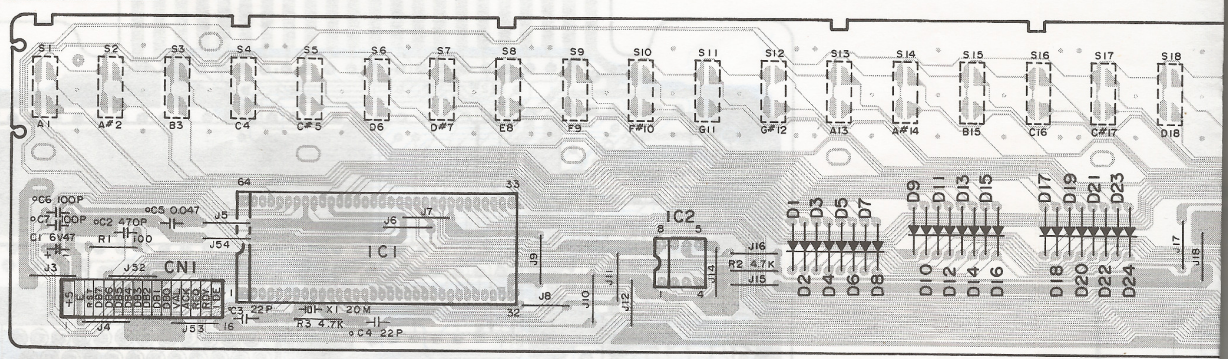

MKB2

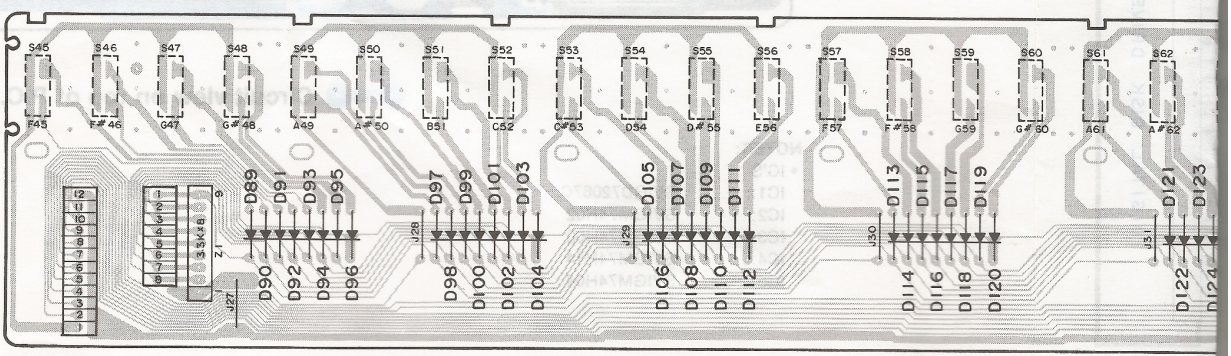

RCUIT

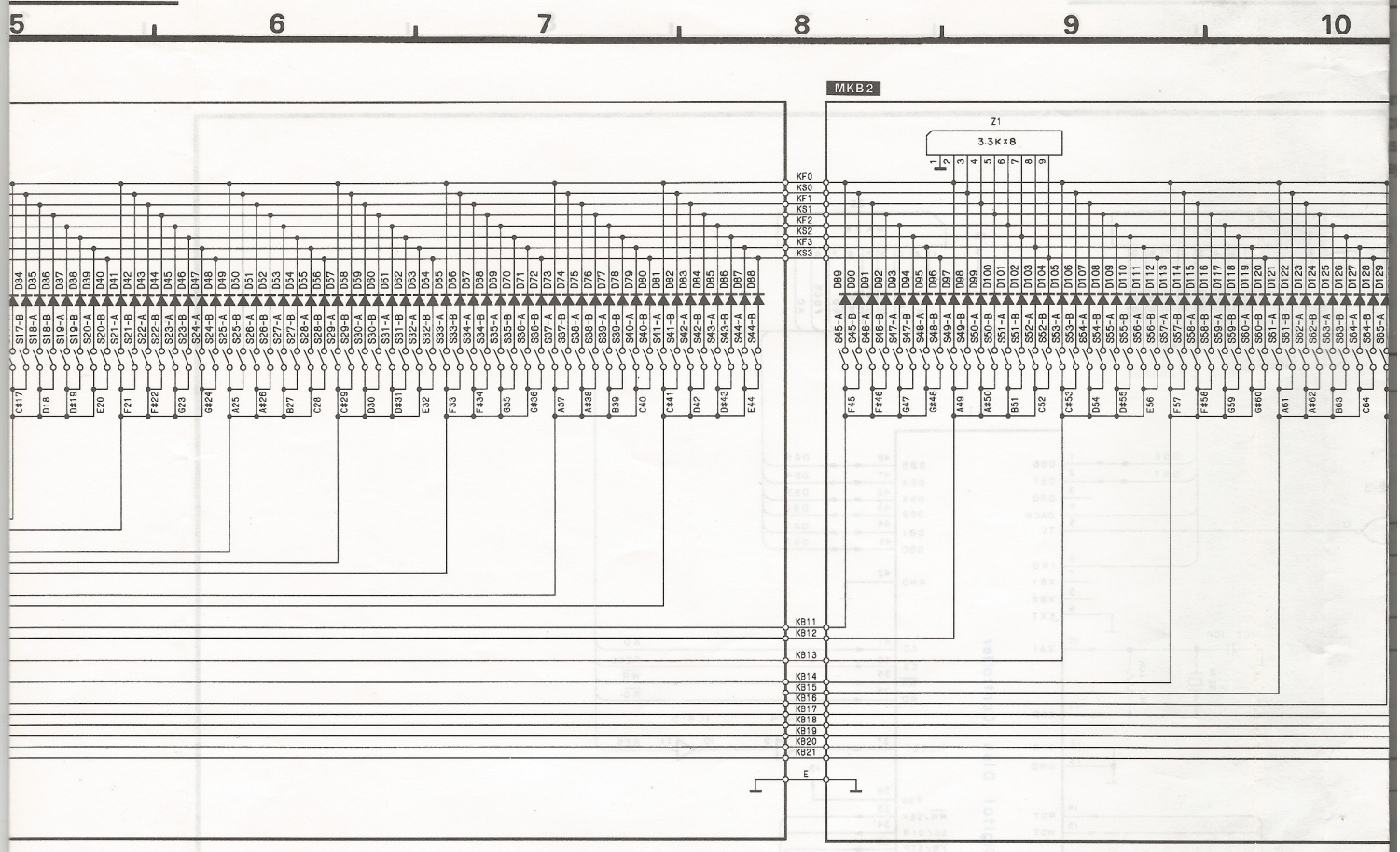
5
6
7
8
9
10
MKB2
Z1
3.3K×8
KF0
KS0
KF1
KS1
KF2
KS2
KF3
KS3
KB11
KB12
KB13
KB14
KB15
KB16
KB17
KB18
KB19
KB20
KB21
E

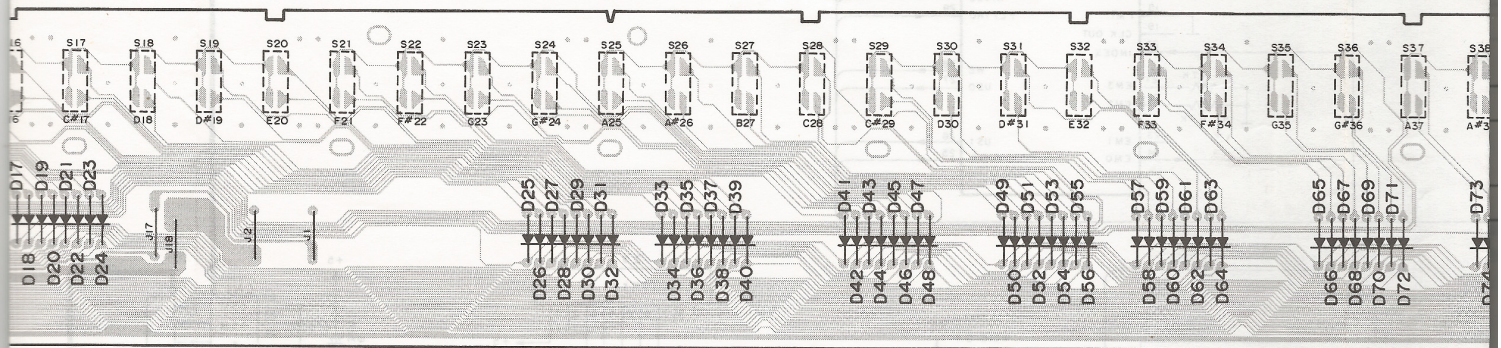
S17
S18
S19
S20
S21
S22
S23
S24
S25
S26
S27
S28
S29
S30
S31
S32
S33
S34
S35
S36
S37
C#17
D18
D#19
E20
F21
F#22
G23
G#24
A25
A#26
B27
C28
C#29
D30
D#31
E32
F33
F#34
G35
G#36
A37
D17
D19
D21
D23
D18
D20
D22
D24
D25
D27
D29
D31
D26
D28
D30
D32
D33
D35
D37
D39
D34
D36
D38
D40
D41
D43
D45
D47
D42
D44
D46
D48
D49
D51
D53
D55
D50
D52
D54
D56
D57
D59
D61
D63
D58
D60
D62
D64
D65
D67
D69
D71
D66
D68
D70
D72
D73

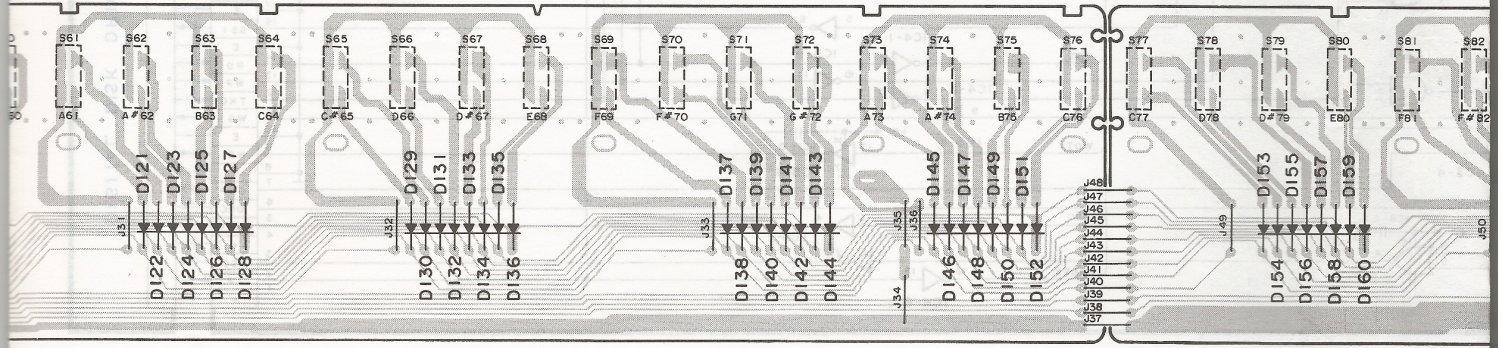
S61
S62
S63
S64
S65
S66
S67
S68
S69
S70
S71
S72
S73
S74
S75
S76
S77
S78
S79
S80
S81
S82
A61
A#62
B63
C64
C#65
D66
D#67
E69
F69
F#70
G71
G#72
A73
A#74
B75
C76
C77
D78
D#79
E80
F81
F#82
D121
D123
D125
D127
D122
D124
D126
D128
D129
D131
D133
D135
D130
D132
D134
D136
D137
D139
D141
D143
D138
D140
D142
D144
D145
D147
D149
D151
D146
D148
D150
D152
D153
D155
D157
D159
D154
D156
D158
D160
J31
J32
J33
J34
J35
J36
J37
J38
J39
J40
J41
J42
J43
J44
J45
J46
J47
J48
J49
J50

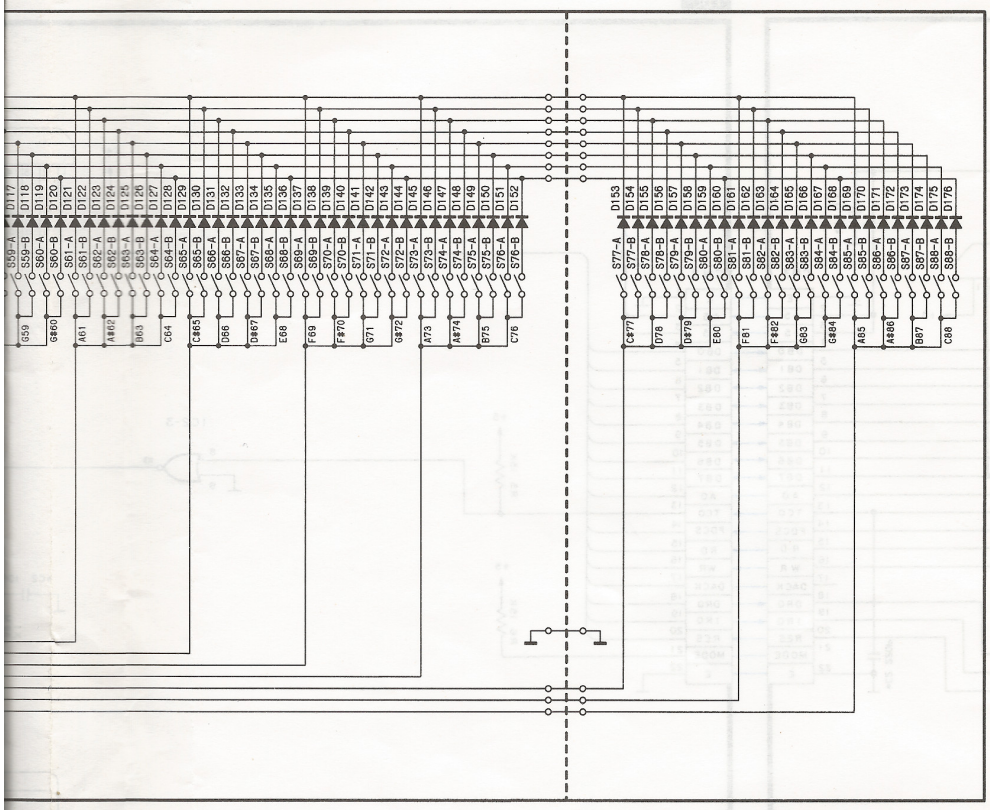

SXPG209711A

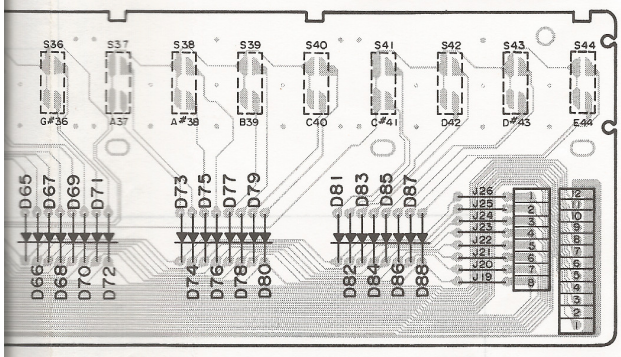

MKB1

NOTES:

- IC'S
  - IC1: MSM7U042016
  - IC2: BR93CS46
- DIODES
  - D1~88: MT162A

SXPG209711B

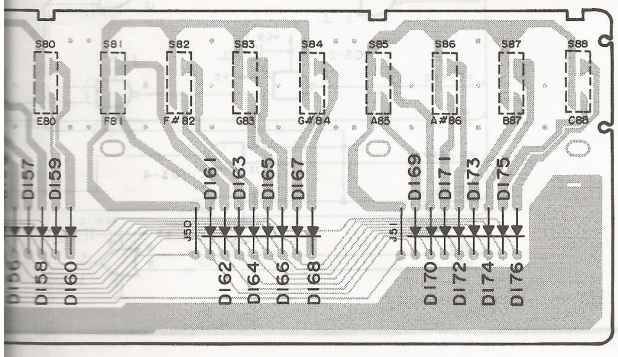

MKB2

NOTES:

- DIODES
  - D89~176: MT162A

REPLACEMENT PARTS LIST.....P.C.B. and Wiring Parts

Notes:

1. The marking (RTL) indicates that the Retention Time is limited for this item. After the discontinuation of this assembly in production, the item will continue to be available for a specific period of time. The retention period of availability is dependant on the type of assembly, and in accordance with the laws governing part and product retention.
   After the end of this period, the assembly will no longer be available.
2. Important safety notice
   Components identified by ⚠ mark have special characteristics important for safety. When replacing any of these components, use only manufacturer's specified parts.
3. The "S" mark is service standard parts and may differ from production parts.
4. ○ mark are new parts.
5. For part No. with area mark, check the area when placing an order.

■ PRINTED CIRCUIT BOARD

	RTL	Area	Part No.	Description	Per/Set
○	RTL	M MC XM EZ	SXPG211451	MAIN	1
○	RTL	Others	SXPG211411	MAIN	1
○	RTL	M MC XM EZ	SXPG209841	JACK	1
○	RTL	Others	SXPG209831	JACK	1
○	RTL	M MC XM	SXPG211831	AS	1
○	RTL	EZ	SXPG211841	AS	1
○	RTL	Others	SXPG211811	AS	1
○	RTL	M MC XM	SXPG212831	TCF	1
○	RTL	EK X XR XS XT XD	SXPG212841	TCF	1
○	RTL	Others	SXPG212811	TCF	1
○	RTL		SXPG142231	MIC	1
○	RTL		SXPG210831	HP	1
○	RTL		SXPG211511A	CPL	1
○	RTL		SXPG211511B	CPR	1
○	RTL		SXPG211611	CPSQ	1
○	RTL		SXPG212711	FDCN	1
	RTL		SXPG208311	FDC	1
	RTL		SXPG209711A	MKB1	1
	RTL		SXPG209711B	MKB2	1
○			QSLG005AA	LCD	1

MAIN MAIN CIRCUIT

	Ref. No.	Part No.	Description	Per/Set
		INTEGRATED CIRCUITS		
○	IC1	D70325GJ-10	16 bit Microcomputer	1
	IC2	D65012GF-A79	Gate Array	1
	IC3	SVIGMSM6253	A/D Converter	1
○	IC4	QSIGCR370AX0	4M bit Programmed EP ROM	1
○	IC5	QSIGH3C04C21	4M bit Accomp Data ROM	1
○	IC6, 8	ATT7C256BF85	256K bit Static RAM	2
	IC7	M74HC244FP	Bus Receiver	1
	IC9	HM65256BLF10	256K bit Pseudo Static RAM	1
	IC10	M74HC00FP	Quad 2-input NAND Gates	1
○	IC11	TC25540AF006	Tone Generator LSI	1
○	IC12	D6382GF-3B9	Digital Signal Processor	1
	IC13	M74HC32FP	Quad 2-input OR Gates	1
○	IC14, 15	MN41464AS-08	256K bit Dynamic RAM	2
○	IC16	PCM63P	D-A Converter	1
	IC17	T74H4051AF	8-channel Multiplexer	1
	IC18, 25	M5218AFP	Operational Amplifier	2
	IC19	M5238FP	Operational Amplifier	1
○	IC20	QSIGH3C16C51	16M bit Wave ROM	1
○	IC21	QSIGH3C16C52	16M bit Wave ROM	1
○	IC22	QSIGH3C16C53	16M bit Wave ROM	1
○	IC24	M74HC245FP	Bus Transceiver	1
○	IC26	M5279L05	−5V Voltage Regulator	1
	IC27	SVIGM5278L05	+5V Voltage Regulator	1
		TRANSISTOR		
	Q1	2SA1534ARS	Transistor	1
		DIODES		
	D1, 3~5	MA165TA5	Diode	4
	D2	MA4051MTA	Zener, 5.1V	1
	D6, 7	MA4062	Zener, 6.2V	2
		OSCILLATORS		
○	X1	QSXG1A1800A	18MHz Quartz Oscillator	1
○	X2	QSXG1A4915A	49.152MHz Quartz Oscillator	1
○	X3	QSXG2F2500A	25MHz Ceramic Oscillator	1
		COMPONENT COMBINATIONS		
	Z1~3, 5~10	EXBS8V472J	4.7kΩ×4	9
	Z4, 11~25, 28	EXBS8V101J	100Ω×4	17
		COIL		
○	L1	QLQGT1B800MA	Coil	1
		RESISTORS		
	R1	ERDS2TJ334	330kΩ	1
	R2	ERDS2TJ472	4.7kΩ	1
	R3	ERDS2TJ225	2.2MΩ	1
	R4~6	ERDS2TJ103	10kΩ	3
	R7	ERDS2TJ154	150kΩ	1
	R8	ERDS2TJ103	10kΩ	1
	R9	ERDS2TJ183	18kΩ	1
	R10	ERDS2TJ332	3.3kΩ	1
	R11~13	ERDS2TJ103	10kΩ	3
	R15, 16	ERDS2TJ103	10kΩ	2
	R17	ERDS2TJ101	100Ω	1
	R18	ERDS2TJ681	680Ω	1
	R19, 20	ERDS2TJ680	68Ω	2
	R21	ERDS2TJ472	4.7kΩ	1
	R22	ERDS2TJ103	10kΩ	1
	R25	ERDS2TJ105	1MΩ	1
	R26	ERDS2TJ682	6.8kΩ	1
	R27	ERDS2TJ101	100Ω	1
	R28	ERDS2TJ102	1kΩ	1
	R29	ERDS2TJ101	100Ω	1
	R30~33	ERDS2TJ221	220Ω	4
	R38, 39	ERDS2TJ683	68kΩ	2

Ref. No.	Part No.	Description	Per/Set
R41	ERDS2TJ274	270kΩ	1
R42	ERDS2TJ124	120kΩ	1
R43	ERDS2TJ823	82kΩ	1
R44	ERDS2TJ683	68kΩ	1
R45	ERDS2TJ563	56kΩ	1
R46	ERDS2TJ393	39kΩ	1
R48, 49	ERDS2TJ683	68kΩ	2
R51	ERDS2TJ563	56kΩ	1
R52	ERDS2TJ683	68kΩ	1
R53	ERDS2TJ393	39kΩ	1
R54	ERDS2TJ823	82kΩ	1
R55	ERDS2TJ124	120kΩ	1
R56	ERDS2TJ274	270kΩ	1
R70	ERDS2TJ103	10kΩ	1
R71	ERDS2TJ681	680Ω	1
R72	ERDS2TJ152	1.5kΩ	1
R73	ERDS2TJ332	3.3kΩ	1
R75, 76	ERDS2TJ222	2.2kΩ	2
R77	ERDS2TJ332	3.3kΩ	1
R80, 81 ⚠	ERD2FCVJ4R7	4.7Ω, 1/4W, Fuse Type	2
R82	ERDS2TJ472	4.7kΩ	1
R83	ERDS2TJ331	330Ω	1
R84	ERDS2TJ103	10kΩ	1
R85	ERDS2TJ472	4.7kΩ	1
R86	ERDS2TJ222	2.2kΩ	1
R87	ERDS2TJ103	10kΩ	1
R89	ERDS2TJ223	22kΩ	1
R90	ERDS2TJ102	1kΩ	1
R91	ERDS2TJ222	2.2kΩ	1
R92	ERDS2TJ103	10kΩ	1
R93	ERDS2TJ223	22kΩ	1
R94	ERDS2TJ102	1kΩ	1
R100~108	ERDS2TJ101	100Ω	9
R110~112	ERDS2TJ221	220Ω	3
R201~203	ERDS2TJ103	10kΩ	3
R220~254	ERDS2TJ221	220Ω	35
CAPACITORS			
C1	ECRR1H104ZF	0.1µF	1
C2	ECBA1C682MR5	0.0068µF	1
C3	ECUV1H104ZFX	0.1µF	1
C4	ECEA1CKN100	10µF, 16V	1
C5, 6	ECRR1H104ZF	0.1µF	2
C7	ECUV1H104ZFX	0.1µF	1
C8	ECRR1H104ZF	0.1µF	1
C9~14	ECUV1H104ZFX	0.1µF	6
C15, 16	ECCF1H100D	10pF	2
C17	ECUV1H104ZFX	0.1µF	1
C18	ECEA0JKA101	100µF, 6.3V	1
C19	ECEA1HKA010	1µF, 50V	1
C20	ECBA1H470J5	47pF	1
C21~23	ECUV1H104ZFX	0.1µF	3
C24	ECBA1H680J5	68pF	1
C25	ECUV1H104ZFX	0.1µF	1
○ C26	EECS5R5V105	1F, 5.5V, Memory Back-up	1
C27	ECEA1CKA100	10µF, 16V	1
C28	ECEA0JKA471	470µF, 6.3V	1
C29	ECUV1H104ZFX	0.1µF	1
C30	ECCF1H330J	33pF	1
C31	ECCF1H150J	15pF	1
C32, 33	ECUV1H104ZFX	0.1µF	2
C34	ECCF1H150J	15pF	1
C35	ECCF1H030C	3pF	1
C36	ECEA0JKA470	47µF, 6.3V	1
C37	ECUV1H104ZFX	0.1µF	1
C38	ECEA1CKA100	10µF, 16V	1
C39	ECBA1C682MR5	0.0068µF	1

Ref. No.	Part No.	Description	Per/Set
C40	ECEA1CKA100	10µF, 16V	1
C41	ECEA0JKA470	47µF, 6.3V	1
C43~45	ECUV1H104ZFX	0.1µF	3
○ C47~53	ECUT1H222KBN	0.0022µF	7
C54	ECBA1C222MR5	0.0022µF	1
C55	ECBA1H101KB5	100pF	1
C56	ECBA1C222MR5	0.0022µF	1
C57	ECBA1H101KB5	100pF	1
C58~60	ECUV1H104ZFX	0.1µF	3
C61	ECBA1C682MR5	0.0068µF	1
C62~69	ECUV1H104ZFX	0.1µF	8
○ C70	ECUT1H222KBN	0.0022µF	1
C71	ECBA1H471KB5	470pF	1
C74	ECUV1H104ZFX	0.1µF	1
C75, 76	ECEA0JKA470	47µF, 6.3V	2
C79	ECUV1H104ZFX	0.1µF	1
C80, 81	ECSS1EF106B	10µF, 25V	2
C82	ECBA1H101KB5	100pF	1
C83	ECBA1H471KB5	470pF	1
C84~87	ECUV1H104ZFX	0.1µF	4
C88, 89	ECEA1HKN010	1µF, 50V	2
C90~92	ECUV1H104ZFX	0.1µF	3
C94	ECBA1H471KB5	470pF	1
C95	ECUV1H104ZFX	0.1µF	1
C96	ECRR1H104ZF	0.1µF	1
C97	ECBA1H471KB5	470pF	1
C98~107	ECUV1H104ZFX	0.1µF	10
C108, 109	ECUV1H104ZFX	0.1µF	2
○ C110	ECRR1H104ZF	0.1µF	1
C111	ECSS1EF106B	10µF, 25V	1

JACK JACK CIRCUIT

Ref. No.	Part No.	Description	Per/Set
INTEGRATED CIRCUIT			
IC1	SVIGTLP513	Photo Coupler	1
TRANSISTORS			
S Q1~3	2SA1015-GR	2SA933STRS (SUB. Part)	3
DIODES			
D1~7	MA165TA5	Diode	7
COILS			
L1~5	QLQGT3T150SA	Coil	5
JACKS			
JK1	QJSG002AA	PEDAL IN	1
JK2~4	SJSG1370A	MIDI (IN, OUT, THRU)	3
JK5~8	QJJG003AA	LINE OUT, AUX IN	4
CONNECTORS (Except for M, MC, XM, EZ areas)			
CN1	QJTG01010AA	Connector	1
CN2	QJTG01005AA	Connector	1

	Ref. No.	Part No.	Description	Per/Set
	VARIABLE RESISTOR			
	VR1	EVJ01PF25B55	500kΩ B, TUNE	1
	WIRES			
○	W1, 2	QEXG01008RA	Wire	2
	RESISTORS			
	R1, 2	ERDS2TJ103	10kΩ	2
	R3	ERDS2TJ471	470Ω	1
	R4	ERDS2TJ104	100kΩ	1
	R5~7	ERDS2TJ103	10kΩ	3
	R8, 9	ERDS2TJ101	100Ω	2
	R10	ERDS2TJ221	220Ω	1
	R11	ERDS2TJ104	100kΩ	1
	R12, 13	ERDS2TJ101	100Ω	2
	R14	ERDS2TJ221	220Ω	1
	R15	ERDS2TJ104	100kΩ	1
	R16	ERDS2TJ221	220Ω	1
	R17, 18	ERDS2TJ102	1kΩ	2
	R19, 20	ER0S2TKF1001	1kΩ, ±1%	2
	R21, 22	ERDS2TJ102	1kΩ	2
	R23, 24	ERDS2TJ152	1.5kΩ	2
	CAPACITORS			
	C1	ECRR1H104ZF	0.1μF	1
	C2~4	ECKF1E473ZV	0.047μF	3
	C5, 6	ECCF1H221J	220pF	2
	C7	ECKF1E473ZV	0.047μF	1
	C8	ECEA0JKA470	47μF, 6.3V	1
	C9	ECEA1HKN010	1μF, 50V	1
	C10, 13, 16	ECRR1H104ZF	0.1μF	3
	C18~21	ECBA1C222MR5	0.0022μF	4

AS AMP & POWER SUPPLY CIRCUIT

	Ref. No.	Part No.	Description	Per/Set
	INTEGRATED CIRCUITS			
	IC1	SVIGS4172M2M	Power Amplifier	1
	IC2	SVIGM5291P	Switching Regulator	1
	IC3	SVIGM5F7815	+15V Voltage Regulator	1
	IC4	SVIGM5F7915	−15V Voltage Regulator	1
S	IC5, 8~10	SVIGM5218L	Operational Amplifier	4
	IC11	SVIGLM1894N	Dynamic Noise Reduction	1
	TRANSISTORS			
	Q1	2SA1643	Transistor	1
S	Q4, 6, 13~20	2SA1015-GR	2SA933STRS (SUB. Part)	10
S	Q5	2SC1815GR	Transistor	1
	Q9, 12	2SA1534ARS	Transistor	2
	Q10, 11	2SC3940ARS	Transistor	2

	Ref. No.	Part No.	Description	Per/Set
	DIODES			
	D1, 2 ⚠	SVDGERA1502	Rectifier	2
S	D3~10 ⚠	SVDGS3V20	Rectifier	8
	D11	SVDGRK14S	Diode	1
	D12	MA2062LF	Zener, 6.2V	1
	D15, 16	MA4200	Zener, 20V	2
	D17	EK04	Diode	1
	D18, 19	MA165TA5	Diode	2
	COILS			
	L1	QLQGT1T121SA	Coil	1
	L4	QLQGT3T150SA	Coil	1
	CONNECTORS (Except for M, MC, XM, EZ areas)			
	CN2	QJTG01005AA	Connector	1
	CN3	QJTG01012AA	Connector	1
	FUSES			
	F4, 5 M MC XM ⚠	XBA1C50NU100	5A, 125V	2
	F4, 5 Others ⚠	XBA2C40TB0	T4A, 250V	2
	IC PROTECTORS			
○	IP1 ⚠	ICP-N38T104	IC Protector	1
	IP2, 3 ⚠	ICP-N10T104	IC Protector	2
	WIRE			
○	W1	QEXG01008RA	Wire	1
	RESISTORS			
	R1, 2	ERDS2TJ103	10kΩ	2
	R5 ⚠	ERX1ANJP4R7S	4.7Ω, 1W, Flame-Proof	1
	R6 ⚠	ERX1ANJPR22S	0.22Ω, 1W, Flame-Proof	1
	R7	ERDS2TJ101	100Ω	1
	R8	ERDS2TJ471	470Ω	1
	R9	ERDS2TJ470	47Ω	1
	R10 ⚠	ERG1ANJP221S	220Ω, 1W, Flame-Proof	1
	R11	ER0S2TKF3571	3.57kΩ, ±1%	1
	R12	ERDS2TKF1001	1kΩ, ±1%	1
	R15, 16	ERDS2TJ102	1kΩ	2
	R17	ERDS2TJ473	47kΩ	1
	R18	ERDS2TJ103	10kΩ	1
	R19	ERDS2TJ101	100Ω	1
	R20	ERDS2TJ332	3.3kΩ	1
	R21	ERDS2TJ473	47kΩ	1
	R22	ERDS2TJ681	680Ω	1
	R23	ERDS2TJ823	82kΩ	1
	R26, 27	ERDS2TJ224	220kΩ	2
	R29	ERDS2TJ220	22Ω	1
	R56, 57	ERDS2TJ472	4.7kΩ	2
	R58, 59	ERDS2TJ222	2.2kΩ	2
	R62, 63	ERDS2TJ471	470Ω	2
	R66, 67	ERDS2TJ222	2.2kΩ	1
	R70	ERDS2TJ223	22kΩ	1
	R71	ERDS2TJ103	10kΩ	1
	R72	ERDS2TJ471	470Ω	1
	R73	ERDS2TJ223	22kΩ	1
	R74	ERDS2TJ103	10kΩ	1
	R75	ERDS2TJ471	470Ω	1
	R76	ERDS2TJ273	27kΩ	1

Ref. No.	Part No.	Description	Per/Set
R77	ERDS2TJ103	10kΩ	1
R78	ERDS2TJ471	470Ω	1
R79 ⚠	ERD2FCVJ4R7	4.7Ω, 1/4W, Fuse Type	1
R80	ERDS2TJ223	22kΩ	1
R81	ERDS2TJ103	10kΩ	1
R82	ERDS2TJ471	470Ω	1
R83	ERDS2TJ223	22kΩ	1
R84	ERDS2TJ103	10kΩ	1
R85	ERDS2TJ471	470Ω	1
R86	ERDS2TJ273	27kΩ	1
R87	ERDS2TJ103	10kΩ	1
R88	ERDS2TJ471	470Ω	1
R89	ERDS2TJ472	4.7kΩ	1
R90 ⚠	ERD2FCVJ4R7	4.7Ω, 1/4W, Fuse Type	1
R91	ERDS2TJ472	4.7kΩ	1
R92	ERDS2TJ103	10kΩ	1
R94	ERDS2TJ102	1kΩ	1
R95 ⚠	ERD2FCVG101	100Ω, 1/4W, Fuse Type	1
R96 ⚠	ERD2FCVJ4R7	4.7Ω, 1/4W, Fuse Type	1
R97	ERDS2TJ473	47kΩ	1
R98	ERDS2TJ102	1kΩ	1
R99	ERDS2TJ222	2.2kΩ	1
R100, 101	ERDS2TJ152	1.5kΩ	2
R102	ERDS2TJ183	18kΩ	1
R103	ERDS2TJ103	10kΩ	1
R105~108	ERDS2TJ102	1kΩ	4
R109	ERDS2TJ224	220kΩ	1
R110	ERDS2TJ472	4.7kΩ	1
R112	ERDS2TJ473	47kΩ	1
R113	ERDS2TJ102	1kΩ	1
R114	ERDS2TJ222	2.2kΩ	1
R115, 116	ERDS2TJ152	1.5kΩ	2
R117, 118 ⚠	ERD25FVJ4R7	4.7Ω, 1/4W, Flame-Proof	2
R119	ERDS2TJ334	330kΩ	1
R121	ERDS2TJ471	470Ω	1
R124~126	ERDS2TJ332	3.3kΩ	3
R127	ERDS2TJ331	330Ω	1
R129	ERDS2TJ471	470Ω	1
R132~134	ERDS2TJ332	3.3kΩ	3
R135	ERDS2TJ331	330Ω	1
R136, 137	ERDS2TJ102	1kΩ	2
R138	ERDS2TJ331	330Ω	1
R139	ERDS2TJ681	680Ω	1
R140	ERDS2TJ103	10kΩ	1
R141	ERDS2TJ221	220Ω	1
R142	ERDS2TJ471	470Ω	1
R143	ERDS2TJ221	220Ω	1
R145	ERDS2TJ221	220Ω	1
R146, 147	ERDS2TJ332	3.3kΩ	2
R148	ERDS2TJ683	68kΩ	1
R149	ERDS2TJ104	100kΩ	1
R150	ERDS2TJ473	47kΩ	1
R151~153	ERDS2TJ104	100kΩ	3
R154	ERDS2TJ473	47kΩ	1
R155	ERDS2TJ683	68kΩ	1
R158	ERDS2TJ221	220Ω	1
R160	ERDS2TJ224	220kΩ	1
R162	ERDS2TJ224	220kΩ	1
R163	ERDS2TJ220	22Ω	1
R164	ERDS2TJ183	18kΩ	1
R165	ERDS2TJ103	10kΩ	1
R166	ERDS2TJ471	470Ω	1
R170, 171	ERDS2TJ102	1kΩ	1
CAPACITORS			
C1, 2	ECEA1VU222	2200μF, 35V	2
C3, 4	ECEA1VU332	3300μF, 35V	2

Ref. No.	Part No.	Description	Per/Set
C5 ⚠	ECQE1A104M6	0.1μF, 125V	1
C6	ECEA1VKG100	10μF, 35V	1
C8	ECEA0JU102	1000μF, 6.3V	1
C10	ECRR1H104ZF	0.1μF	1
C13, 14	ECEA1VKG100	10μF, 35V	2
C17	ECCF1H220J	22pF	1
C19	ECEA1CKA470	47μF, 16V	1
C34, 35	ECQV1H334JM	0.33μF	2
C36, 37	ECQB1H153JF	0.015μF	2
C38, 39	ECQB1H333JF	0.033μF	2
C40, 41	ECQV1H334JM	0.33μF	2
C42, 43	ECQB1H153JF	0.015μF	2
C44, 45	ECQB1H333JF	0.033μF	2
C46	ECQV1H154JM	0.15μF	1
C48	ECQV1H154JM	0.15μF	1
C49	ECQG1H332KZ	0.0033μF	1
C50	ECEA1HU330	33μF, 50V	1
C51	ECQV1H154JM	0.15μF	1
C52, 53	ECEA1VKG100	10μF, 35V	2
C55	ECQV1H154JM	0.15μF	1
C56	ECQG1H332KZ	0.0033μF	1
C57	ECEA1VKG100	10μF, 35V	1
C58	ECQV1H154JM	0.15μF	1
C59, 60	ECEA1VKG100	10μF, 35V	2
C61, 62	ECRR1H104ZF	0.1μF	2
C63	ECQV1H154JM	0.15μF	1
C65, 66	ECEA50Y22	22μF, 50V	2
C67, 68	ECEA50Y3R3	3.3μF, 50V	2
C70	ECEA1CKA100	10μF, 16V	1
C71	ECEA1VKG100	10μF, 35V	1
C72	ECEA1CKN470	47μF, 16V	1
C75	ECQB1H333JF	0.033μF	1
C76, 77	ECQG1H332KZ	0.0033μF	2
C78	ECBA1H681KB5	680pF	1
C79	ECEA1HKA010	1μF, 50V	1
C82	ECQB1H333JF	0.033μF	1
C83, 84	ECQG1H332KZ	0.0033μF	2
C85	ECBA1H681KB5	680pF	1
C86	ECEA1HKA010	1μF, 50V	1
C87, 88	ECEA1CKA470	47μF, 16V	2
C89	ECRR1H104ZF	0.1μF	1
C90	ECQG1H102KZ	0.001μF	1
C91	ECQG1H472KZ	0.0047μF	1
C92	ECEA1CKA100	10μF, 16V	1
C93	ECKF1E473ZV	0.047μF	1
C94	ECEA1CKA100	10μF, 16V	1
C95	ECQG1H472KZ	0.0047μF	1
C96	ECEA1CKA100	10μF, 16V	1
C97	ECQB1H103JF	0.01μF	1
C102	ECCF1H220J	22pF	1
C104	ECRR1H104ZF	0.1μF	1

TCF TRANSFORMER & FUSE CIRCUIT

Ref. No.	Part No.	Description	Per/Set
COIL			
L1 ⚠	SLTGLF3	Line Filter	1
JACK			
JK1 ⚠	SJVD0203B	AC Inlet	1

MIC MICROPHONE CIRCUIT

	Ref. No.	Part No.	Description	Per/Set
	SWITCH			
	S1 EK X ⚠ XR XS XT XD	SSRG100A	Voltage Selector	1
	FUSES			
	F1 M MC ⚠ XM	XBA1C63NU100	6.3A, 125V	1
	F1 EK X ⚠	XBA2C40TB0	T4A, 250V	1
	F2, 3 XR XS ⚠ XT XD	XBA2C20TB0	T2A, 250V	2
	F3 Others ⚠	XBA2C20TB0	T2A, 250V	1
	CAPACITORS			
	C1 ⚠	ECKCVA1472MF	4700pF, Line-Capacitor	1
	C2 ⚠	ECQU2A104MN	0.1μF, 250V, Across-the Line Capacitor	1

	Ref. No.	Part No.	Description	Per/Set
	INTEGRATED CIRCUIT			
S	IC1	SVIGM5218L	Operational Amplifier	1
	COIL			
	L1	QLQGT3T150SA	Coil	1
	JACK			
	JK1	SJJG210A	MIC Jack	1
	VARIABLE RESISTOR			
	VR1	EWHD5A576B54	50kΩ B, MIC Volume	1
	WIRES			
	W1	SWEG290A	Wire	1
○	W2	QEXG01008RA	Wire	1
	RESISTORS			
	R1	ERDS2TJ224	220kΩ	1
	R2	ERDS2TJ103	10kΩ	1
	R3	ERDS2TJ224	220kΩ	1
	R4	ERDS2TJ103	10kΩ	1
	R5	ERDS2TJ224	220kΩ	1
	R6	ERDS2TJ102	1kΩ	1
	CAPACITORS			
	C1, 2	ECRR1H104ZF	0.1μF	2
	C3	ECEA1HKN010	1μF, 50V	1
	C4, 5	ECCF1H101J	100pF	2
	C6	ECEA1HKN010	1μF, 50V	1
	C7	ECQG1H102KZ	0.001μF	1
	C8	ECRR1H104ZF	0.1μF	1

HP HEADPHONES CIRCUIT

	Ref. No.	Part No.	Description	Per/Set
	COIL			
	L1	QLQGT3T150SA	Coil	1
	JACKS			
	JK1, 2	SJJG100A	Headphone Jack	2
	WIRES			
○	W1	QEXG01008RA	Wire	1
○	W2	QEUGK2H12YY	Wire	1
	RESISTORS			
	R1~4 ⚠	ERG1ANJP680S	68Ω, 1W, Flame-Proof	4
	CAPACITORS			
	C1, 2	ECKF1E473ZV	0.047μF	2
	C3	ECRR1H104ZF	0.1μF	1

CPL CONTROL PANEL LEFT CIRCUIT

	Ref. No.	Part No.	Description	Per/Set
	INTEGRATED CIRCUITS			
	IC1	SVIGM603A121	Gate Array	1
	IC2, 3	HD74LS07P	Hex Buffers	2
	TRANSISTORS			
	Q1~4	2SA830SB	Transistor	4
	DIODES			
	D1~44, 49	MA165TA5	Diode	45
	D50~54, 70~83, 87, 89~99, 106	LN282R	LED (Red)	32
	D100	LN382G	LED (Green)	1
	SWITCHES			
	SW1~24	QSPG1005AA	Push Switch	24
	SW25~29	SSSG1011A	Balance	5
	IC PROTECTOR			
	IP1 ⚠	ICP-N10T104	IC Protector	1
	VARIABLE RESISTOR			
	VR1	EWD06910B53G	5kΩ B, Main Volume	1
	RESISTORS			
	R1	ERDS2TJ184	180kΩ	1
	R2	ERDS2TJ221	220Ω	1
	R3	ERDS2TJ152	1.5kΩ	1
	R4	ERDS2TJ102	1kΩ	1
	R5~9	ERDS2TJ103	10kΩ	5
	R10~20	ERDS2TJ680	68Ω	11
	R30~37	ERDS2TJ103	10kΩ	8

Ref. No.	Part No.	Description	Per/Set
CAPACITORS			
C1	ECEA0JKA470	47µF, 6.3V	1
C2	ECBA1H101KB5	100pF	1
C3	ECRR1H104ZF	0.1µF	1
C4	ECEA1HKA010	1µF, 50V	1
C5	ECBA1H101KB5	100pF	1
C7	ECRR1H104ZF	0.1µF	1

CPR CONTROL PANEL RIGHT CIRCUIT

Ref. No.	Part No.	Description	Per/Set
INTEGRATED CIRCUITS			
IC1	SVIGM603A121	Gate Array	1
IC2~5	HD74LS07P	Hex Buffers	4
TRANSISTORS			
Q1~4	2SA830SB	Transistor	4
DIODES			
D1~43, 45, 47~49	MA165TA5	Diode	47
D50~54, 56~77, 84, 90~103, 105~109	LN282R	LED (Red)	47
D78~83, 85, 86, 88, 104	LN382G	LED (Green)	10
SWITCHES			
SW1~43, 45, 47, 48	QSPG1005AA	Push Switch	46
IC PROTECTOR			
IP1 ⚠	ICP-N10T104	IC Protector	1
RESISTORS			
R1	ERDS2TJ184	180kΩ	1
R2	ERDS2TJ221	220Ω	1
R3	ERDS2TJ152	1.5kΩ	1
R4	ERDS2TJ102	1kΩ	1
R5~9	ERDS2TJ103	10kΩ	5
R10~20	ERDS2TJ680	68Ω	11
R22	ERDS2TJ680	68Ω	1
R24	ERDS2TJ680	68Ω	1
R26	ERDS2TJ680	68Ω	1
R28, 29	ERDS2TJ680	68Ω	2
R30~37	ERDS2TJ103	10kΩ	8
R38, 39	ERDS2TJ680	68Ω	2
CAPACITORS			
C1	ECEA0JKA470	47µF, 6.3V	1
C2	ECBA1H101KB5	100pF	1
C3	ECRR1H104ZF	0.1µF	1
C4	ECEA1HKA010	1µF, 50V	1
C5	ECBA1H101KB5	100pF	1
C7, 8, 10	ECRR1H104ZF	0.1µF	3

CPSQ SEQUENCER CONTROL CIRCUIT

Ref. No.	Part No.	Description	Per/Set
INTEGRATED CIRCUITS			
IC1	SVIGM603A121	Gate Array	1
IC2, 3	HD74LS07P	Hex Buffers	2
TRANSISTORS			
Q1~4	2SA830SB	Transistor	4
DIODES			
D7~49	MA165TA5	Diode	20
D54, 55, 66~78, 82~86	LN282R	LED (Red)	20
D56~65, 79, 81, 87~89	LN382G	LED (Green)	15
SWITCHES			
SW7~40	QSPG1005AA	Push Switch	19
IC PROTECTOR			
IP1 ⚠	ICP-N10T104	IC Protector	1
RESISTORS			
R1	ERDS2TJ184	180kΩ	1
R2	ERDS2TJ221	220Ω	1
R3	ERDS2TJ152	1.5kΩ	1
R4	ERDS2TJ102	1kΩ	1
R5~9	ERDS2TJ103	10kΩ	5
R10~18	ERDS2TJ680	68Ω	9
R30~37	ERDS2TJ103	10kΩ	8
CAPACITORS			
C1	ECEA0JKA470	47µF, 6.3V	1
C2	ECBA1H101KB5	100pF	1
C3	ECRR1H104ZF	0.1µF	1
C4	ECEA1HKA010	1µF, 50V	1
C5	ECBA1H101KB5	100pF	1

FDCN FD CONNECTOR CIRCUIT

Ref. No.	Part No.	Description	Per/Set
CONNECTOR			
CN3	SJSG16SM222A	Connector	1
CAPACITORS			
C1	ECRR1H104ZF	0.1µF	1
C2	ECCF1H221J	220pF	1

FDC FD CONTROL CIRCUIT

Ref. No.	Part No.	Description	Per/Set
INTEGRATED CIRCUITS			
IC1	SVIGD72067C	Floppy Disk Controller	1
IC2	SVIGM74H02	Quad 2-input NOR Gates	1
IC3	SVIGM74H00	Quad 2-input NAND Gates	1
IC4	SVIGM74H14	Hex Schmitt-trigger Inverters	1
IC5	SVIGM74H04	Hex Inverters	1
OSCILLATOR			
X1	QSXG1A3200A	32MHz, Quartz Oscillator	1
COMPONENT COMBINATIONS			
Z1, 2	EXBPI8103JM	10kΩ×8	2
Z3	EXBPI8102JM	1kΩ×8	1
RESISTORS			
R1~4	ERDS2TJ472	4.7kΩ	4
R5, 6	ERDS2TJ153	15kΩ	2
R7	ERDS2TJ103	10kΩ	1
CAPACITORS			
C1, 2	ECBA1H100J	10pF	2
C6	ECEA0JKA331	330μF, 6.3V	1
C8~11	ECRR1H104ZF	0.1μF	4

MKB1 MANUAL KEYBOARD CIRCUIT

Ref. No.	Part No.	Description	Per/Set
INTEGRATED CIRCUITS			
IC1	MSM7U042016	Gate Array	1
IC2	BR93CS46	1k bit Programmed EEPROM	1
DIODES			
S D1~88	MA162A	MA150IR (SUB. Part)	88
OSCILLATOR			
X1	SVQGA20MX040	20MHz, Ceramic Oscillator	1
SWITCHES			
S1~44	QMWG6006AA	Rubber Switch (8 pcs. on one)	6
RESISTORS			
R1	ERDS2TJ101	100Ω	1
R2, 3	ERDS2TJ472	4.7kΩ	2

Ref. No.	Part No.	Description	Per/Set
CAPACITORS			
C1	ECEA0JU470	47μF, 6.3V	1
C2	ECCF1H471J	470pF	1
C3, 4	ECCF1H220J	22pF	2
C5	ECKF1E473ZV	0.047μF	1
C6, 7	ECCF1H101J	100pF	2

MKB2 MANUAL KEYBOARD 2 CIRCUIT

Ref. No.	Part No.	Description	Per/Set
DIODES			
S D89~176	MA162A	MA150IR (SUB. Part)	88
COMPONENT COMBINATION			
Z1	EXBP88332JM	3.3kΩ×8	1
SWITCHES			
S45~88	QMWG6006AA	Rubber Switch (8 pcs. on one)	6

■ WIRING PARTS

Ref. No.	Part No.	Description	Per/Set
○ W1	QEXGVH06030B	Connector with Wire	1
○ W2	QEXGVH06030B	Connector with Wire	1
W3	QEXGSS04090A	Connector with Wire	1
○ W4	QEXGVH05060C	Connector with Wire	1
○ W5	QEXGVH04100B	Connector with Wire	1
○ W6	QEXGSS04105A	Connector with Wire	1
○ W7	QEXGSS05085A	Connector with Wire	1
W8	QEXGSS06090A	Connector with Wire	1
○ W9	QEXGSS14025A	Connector with Wire	1
○ W10	QEXGSS16130A	Connector with Wire	1
W11, 12	QEXGSS14015A	Connector with Wire	2
○ W13	QEXGSS16065A	Connector with Wire	1
○ W14	QEXGVH03065B	Connector with Wire	1
○ W15	QEXGVH06085C	Connector with Wire	1
○ W16 M MC XM EZ	QEXGSS10025A	Connector with Wire	1
○ W17 M MC XM EZ	QEXGSS05025A	Connector with Wire	1
○ W18 M MC XM EZ	QEXGSS12025A	Connector with Wire	1

PACKING

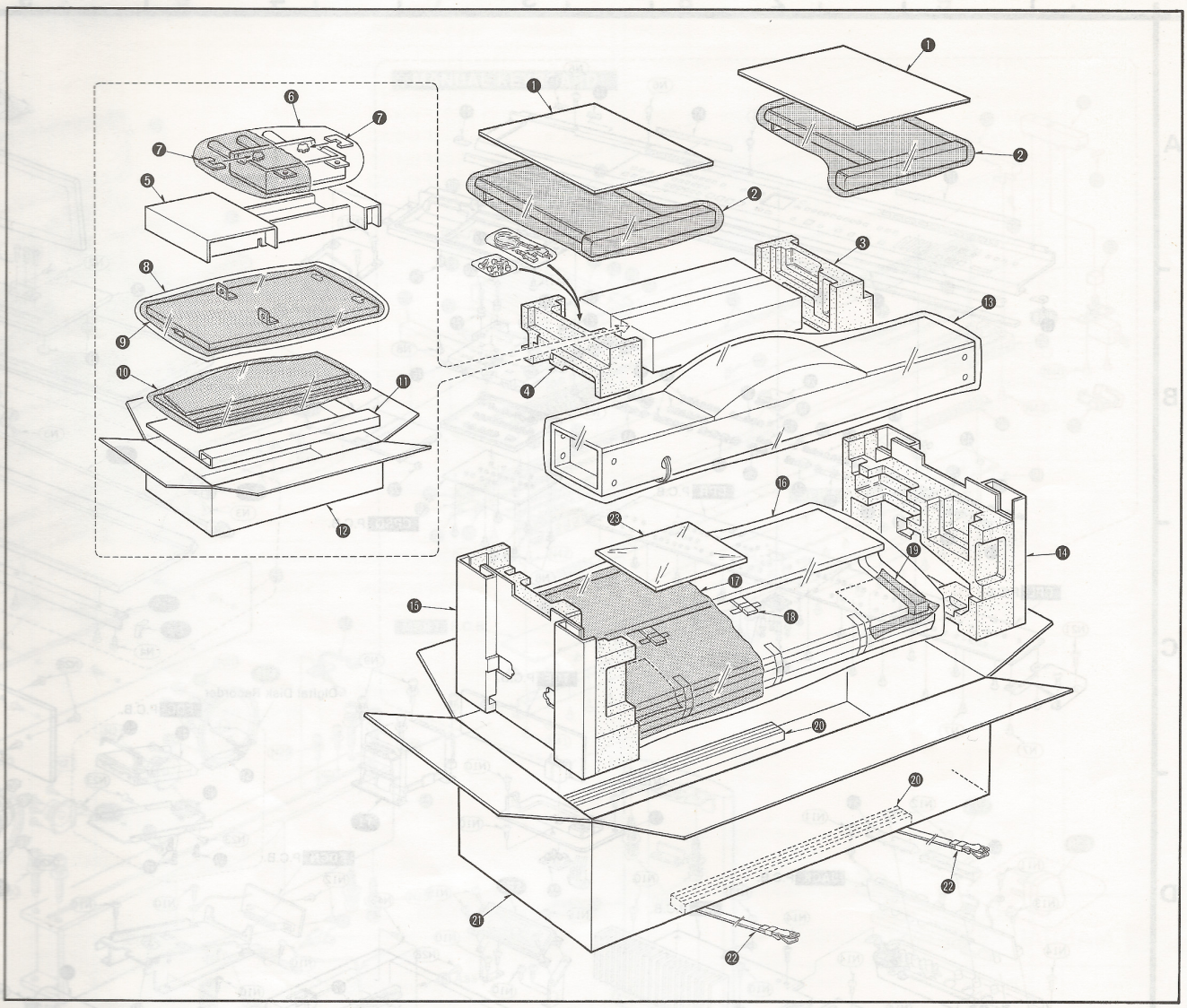

■ PACKING PARTS

Ref. No.	Part No.	Description	Per/Set
○ 1	QPGG0199AA	Cardboard	2
2	QPFG014AB	Protection Cover	2
○ 3	QPNG0332AA	Pad, Upper Right	1
○ 4	QPNG0331AA	Pad, Upper Left	1
○ 5	QPGG0202AA	Pad, Pedal Box	1
6	SPHG1740A	Protection Sheet	1
7	SPNG5161A	Spacer	2
8	SPHG2050A	Polyethylene Bag	1
9	SPHG1580A	Protection Sheet	1
10	SPHG2240A	Polyethylene Sheet	1
○ 11	QPGG0201AA	Cardboard	1
○ 12	QPGG0200AA	Carton	1
13	SPHG1570A	Polyethylene Bag	1
○ 14	QPNG0328AA	Pad, Lower Right	1
○ 15	QPNG0327AA	Pad, Lower Left	1
16	QPFG008AA	Polyethylene Bag	1
17	QPFG015AA	Protection Sheet	1
18	QPHG019AA	Spacer	2
19	QPHG018AA	Protection Sheet	2
20	QPGG0165AA	Pad	2

Ref. No.	Part No.	Description	Per/Set
○ 21	QPGG0198AA	Carton	1
22	SPSG40A	Band	2
INSTRUCTION BOOK			
○ 23 EN	QQFGPR370AA	Instruction Book	1
○ 23 M	QQFGPR370CA	Instruction Book	1
○ 23 MC	QQFGPR370DA	Instruction Book	1
○ 23 EZ EA	QQFGPR370EA	Instruction Book	1
○ 23 EF	QQFGPR370FA	Instruction Book	1
○ 23 EW	QQFGPR370GA	Instruction Book	1
○ 23 EH	QQFGPR370HA	Instruction Book	1
○ 23 X	QQFGPR370JA	Instruction Book	1
○ 23 EK XL XR XS XD	QQFGPR370KA	Instruction Book	1
○ 23 EP XM	QQFGPR370LA	Instruction Book	1
○ 23 XT	QQFGPR370MA	Instruction Book	1

CABINET PARTS LOCATION

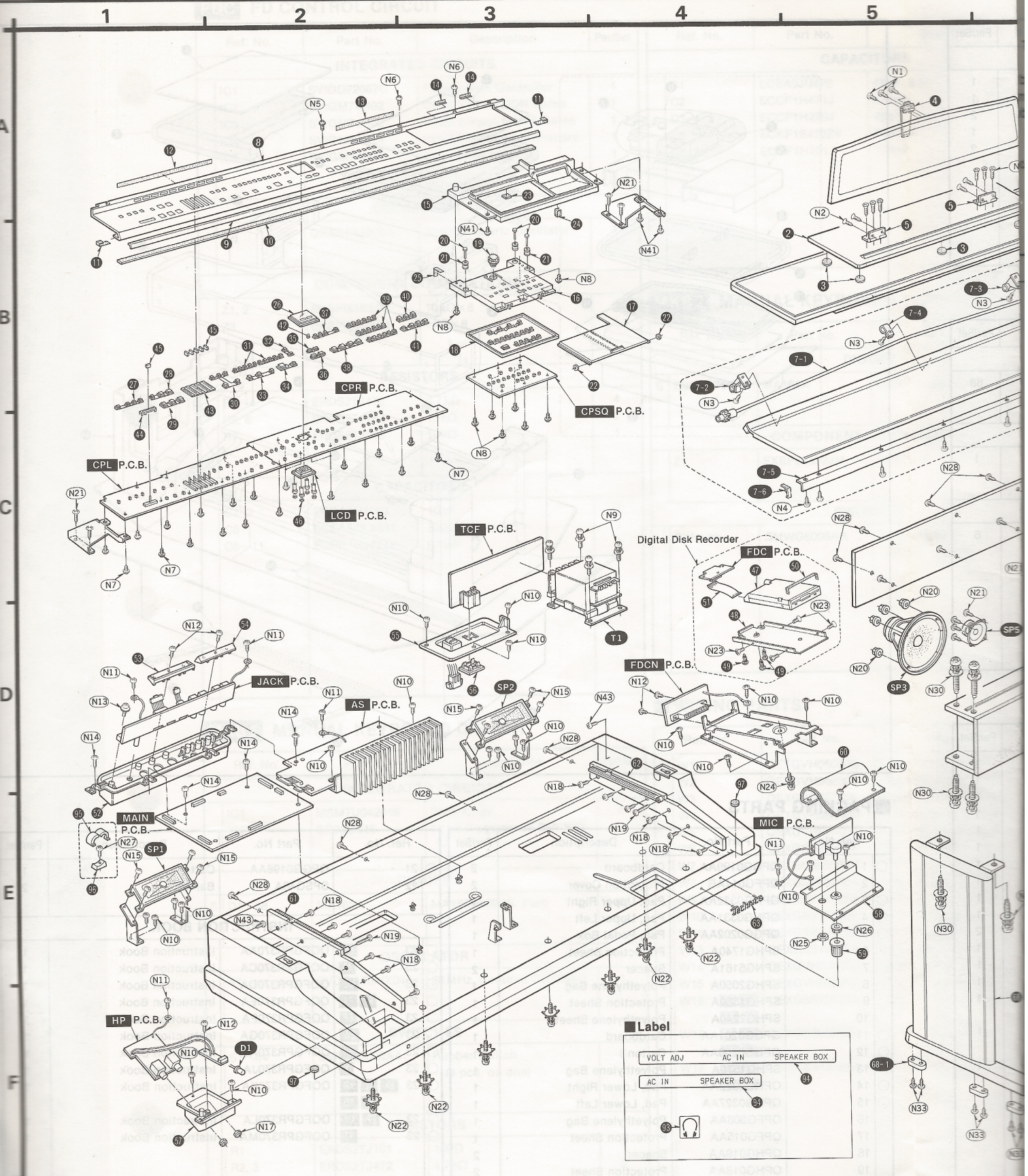

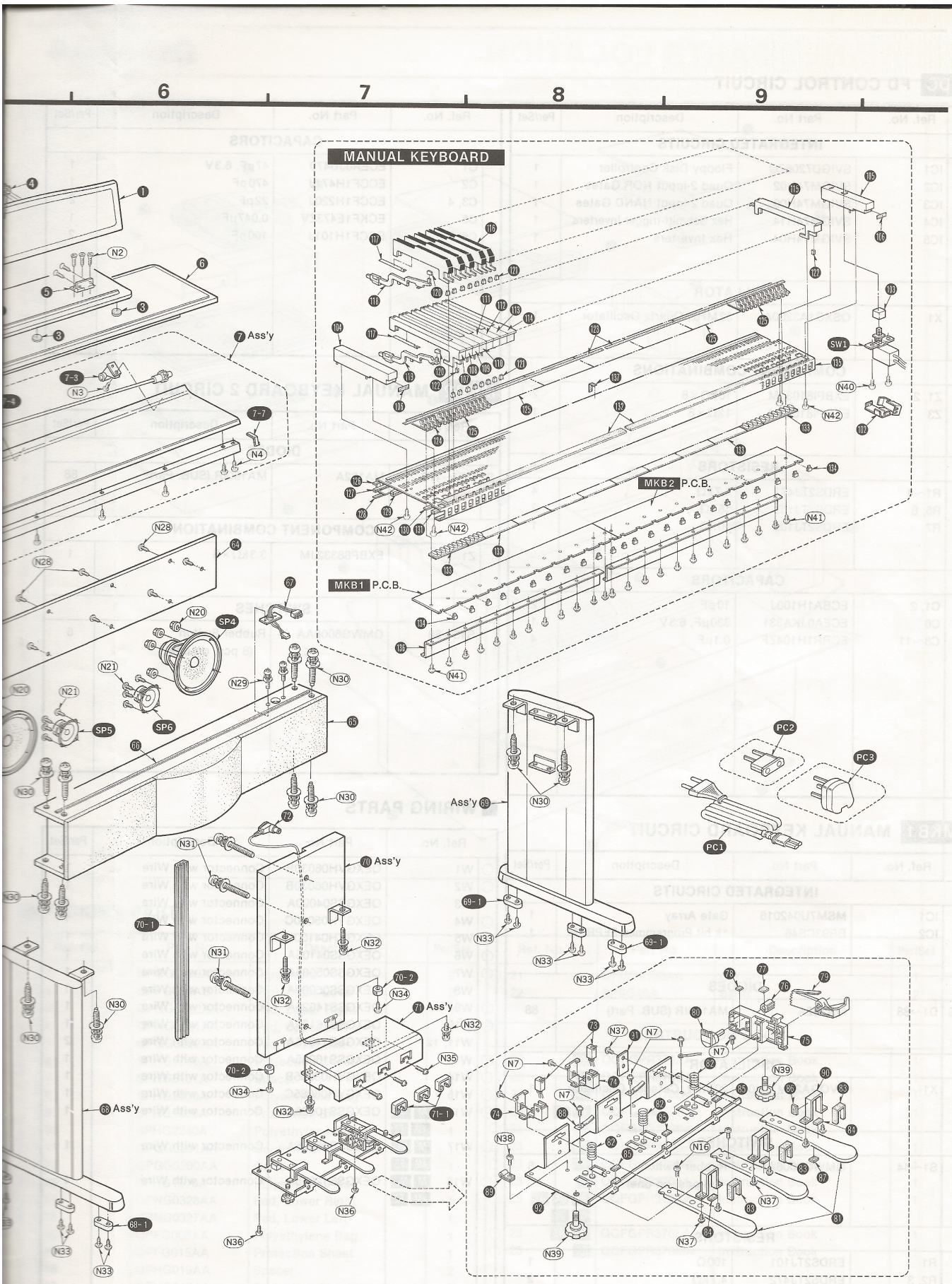
6
7
8
9
MANUAL KEYBOARD
MKB2 P.C.B.
MKB1 P.C.B.
SW1
SP4
SP5
SP6
PC1
PC2
PC3
7 Ass'y
Ass'y 69
70 Ass'y
71 Ass'y
68 Ass'y

REPLACEMENT PARTS LIST.....Cabinet and Chassis Parts

Notes:

1. Important safety notice
   Components identified by ⚠ mark have special characteristics important for safety. When replacing any of these components, use only manufacturer's specified parts.
2. ○ mark are new parts.
3. For part No. with area mark, check the area when placing an order.
4. The marking (RTL) indicates that the Retention Time is limited for this item. After the discontinuation of this assembly in production, the item will continue to be available for a specific period of time. The retention period of availability is dependant on the type of assembly, and in accordance with the laws governing part and product retention.
   After the end of this period, the assembly will no longer be available.

■ CABINET & CHASSIS PARTS

	Ref. No.	Part No.	Description	Per/Set
	SWITCH			
	S1 ⚠	ESB823V	Power Switch	1
	DIODE			
	D1	SEL4214RLC05	LED, Power Indicator	1
	SPEAKERS			
	SP1, 2	EAS15S09A	Speaker, 13×6cm 8Ω	2
	SP3, 4	EAS16PL470A3	16cm, 8Ω	2
	SP5, 6	EAS65PH31A3	6.5cm, 8Ω	2
	TRANSFORMERS			
○	T1 M MC XM ⚠	QTPG1N010A	Power Transformer	1
○	T1 EK X XR XS XT XD ⚠	QTPG1N013A	Power Transformer	1
○	T1 Others ⚠	QTPG1N012A	Power Transformer	1
	POWER CORD & PLUG			
	PC1 XL XR ⚠	SJAG61	AC Power Cord	1
	PC1 M MC XM ⚠	SJAG62	AC Power Cord	1
	PC1 XS ⚠	QJAG001AA	AC Power Cord	1
○	PC1 EK XD ⚠	VJA0733	AC Power Cord	1
	PC1 Others ⚠	SJAG65	AC Power Cord	1
	PC2 X XT ⚠	SJP5213-1	Attachment Plug	1
	PC3 XD ⚠	SJPG1350A	Power Plug	1
	CABINET PARTS			
○	1	QGAG1016AA	Music Rack	1
○	2	QGAG1017AA	Music Rack Stand	1
	3	QMGG011AA	Pad	6
	4	SBLG7	Stay	1
	5	SBHG5003	Hinge	2
○	6	QKQGA049AA	Top Cover	1
○	7	QKQGF010AA	Keyboard Cover Assembly	1
	7-1	QXQG007AA	Axletree	1
	7-2	QMRG7026AA	Holder	1
○	7-3	QMRG7026BA	Holder	1
	7-4	QWBG002AA	Holder	1
○	7-5	QGKG0075BB	Ornament	1
	7-6	QMRG7031AB	Protector	1
	7-7	QMRG7032AB	Protector	1
○	8	QGPG0014DA	Control Panel	1
○	9	QGKG0088AA	Ornament	1
	10	QMFG1035AA	Felt (Red)	1
○	11	QMFG4073AA	Felt	2

	Ref. No.	Part No.	Description	Per/Set
	12	QMFG4040AA	Felt	1
	13	QMFG4041AA	Felt	1
	14	QMFG4032AA	Felt	2
○	15	QGPG0015AG	Subpanel Frame	1
○	16	QGPG0016AQ	Subpanel	1
○	17	QGPG0017BD	Subpanel Cover	1
○	18	QGUG1076AB	Button Assembly	1
	19	RDG5782ZB	Gear	1
	20	RMS0123	Pin	3
	21	QMRG7013AA	Roller	3
	22	QMRG7012AA	Roller	2
	23	QMFG4033AA	Felt	1
	24	QMFG1026AA	Felt	1
	25	QMFG4032AA	Felt	1
○	26	QKWG006AA	LCD Panel	1
○	27	QGUG1143AA	Button	1
○	28	QGUG1144AA	Button	1
○	29	QGUG1145AA	Button	1
○	30	QGUG1146AA	Button	1
○	31	QGUG1147AA	Button	2
○	32	QGUG1148AA	Button	1
○	33	QGUG1149AA	Button	1
○	34	QGUG1150AA	Button	1
○	35	QGUG1151AA	Button	1
○	36	QGUG1152AA	Button	1
○	37	QGUG1153AA	Button	1
○	38	QGUG1154AA	Button	1
○	39	QGUG1155AA	Button	3
○	40	QGUG1156AA	Button	1
○	41	QGUG1157AA	Button	1
○	42	QGUG1158AA	Button	1
○	43	QMRG7034AA	Ornament	1
	44	SGEG260A	Ornament for Sliding Volume	1
	45	SBNG7050C	Knob	6
○	46	QHQG001AA	Latch	4
	47	EME213DV	Digital Disk Drive Unit	1
○	48	SUVG1283A	Cover	1
	49	SHRG9850A	P.C.B. Holder	3
○	50	QMFG1082AA	Felt	1
	51	QEUGR0W10A	Flat Cable	1
○	52	QGKG0076AF	External Jack Case	1
	53	QMRG7029AB	Bracket	1
	54	QMRG7028AB	Bracket	1
	55 EK X XR XS XT XD	QGKG0079AA	AC Jack Panel	1
	55 Others	QGKG0079BA	AC Jack Panel	1
	56 XL XR ⚠	SJS9334A	AC Inlet Cover	1
	56 Others ⚠	SJS9231A	AC Inlet Cover	1
	57	QGKG0080AA	Headphone Jack Case	1
	58	SMKG3371B	Mic Jack Panel	1
	59	SBNG4010A	Mic Volume Knob	1
	60	SMCG860A	Shield Cover	1
○	61	QKSGG008AA	Keyboard Cover Guide, Left	1
○	62	QKSGG009AA	Keyboard Cover Guide, Right	1

Ref. No.	Part No.	Description	Per/Set
63	SGBG160B	Badge	1
○ 64	QKUG1020BAK	Rear Board	1
○ 65	QYKG100BAK	Speaker Box	1
66	QMRG5005AA	Spacer	1
67	QEXGEL06020A	Connector with Wire	1
○ 68	QKQGB190AA	Left Plank Assembly	1
68-1	SHRG2130B	Foot	3
○ 69	QKQGB191AA	Right Plank Assembly	1
69-1	SHRG2130B	Foot	3
○ 70	QKQGZ062AA	Back Plank Assembly	1
70-1	SGXG2463A	Cord Cover	1
70-2	QMRG7018AA	Foot	2
○ 71	QKQGM033AA	Pedal Box Assembly	1
71-1	QGKG0036AA	Ornament	3
72	QJLG002AB	Pedal Cord	1
73	SRDSMLS-2	Switch	2
74	QMWG8005AB	Switch Cover	2
75	STBG9330A	Housing	1
76	STBG9340A	Gear	1
77	SHSG3510A	Felt	1
78	SHSG5980A	Felt	1
79	STBG9350A	Lever	1
80	QRVG16A01B53	Variable Resistor, 5kΩ B	1
81	STBG3119A	Pedal Arm	3
82	SUSG441A	Spring	3
83	SHSG2750A	Felt	3
84	SHSG2770A	Felt	3
85	SHSG2790A	Felt	3
86	SHSG3560A	Felt	1
87	QMFG1079AA	Felt	1
88	SUWG219	Binder	2
89	SHRG1130A	Cord Clamper	1
90	STBG4090A	Arm Guide	3
91	SUWG2380A	Arm Stopper	1
○ 92	QMKG001CA	Chassis	1
93	SGKG3040B	Label (Headphone)	1
○ 94 EK X XR XS XT XD	QQLG054AA	AC IN Label	1
○ 94 Others	QQLG053AA	AC IN Label	
95 M MC XM EZ	QLZG003A	Core	7
96	SHRG1270A	Mounting Base	7
97	QMGG019AA	Rubber Cushion	2
MANUAL KEYBOARD			
102	SHRG8390A	Cover, Power SW.	1
103	QGUG1040AA	Button, Power Switch	1
104	QGPG0042AB	End Cover Panel, Left	1
105	QGPG0041AB	End Cover Panel, Right	1
106	SHSG3690A	Felt	2
107	STBGA1050A	White Key (First Octave A Key)	1
108	STBGA1060A	White Key (B Key)	8
109	STBGA1070A	White Key (C Key)	7
110	STBGA1080A	White Key (D Key)	7
111	STBGA1090A	White Key (E Key)	7
112	STBGA1100A	White Key (F Key)	7
113	STBGA1110A	White Key (G Key)	7
114	STBGA1120A	White Key (A Key)	7
115	STBGA1130A	White Key (Top Octave C Key)	1
116	STBG2920A	Black Key	36
○ 117	SUSG534A	Spring	88
118	QMWG8014AA	Hammer (Black Key)	36
119	QMWG8013AA	Hammer (White Key)	52
120	SHGG9121A	Rubber Cap (Hammer)	88
121	SHRG9900B	Key Guide Rubber	88

Ref. No.	Part No.	Description	Per/Set
122	SHSG5910A	Felt	52
123	QMFG4067AA	Felt	2
124	QMWG8004CA	Fulcrum (4 pcs. on one)	1
125	QMWG8003GA	Fulcrum (12 pcs. on one)	7
126	SHRGA9080A	Sponge	2
127	QMFG1073AA	Felt	2
128	SHSG3461A	Felt	1
129	QMFG1074CA	Felt	2
130	QMFG1061AA	Felt	2
131	QMFG1060AA	Felt	2
132	SHSG3451A	Felt	2
133	QMWG6006AA	Rubber Switch (8 pcs. on one)	11
134	SHRG9751A	P.C.B. Holder	24
135	STBG6216A	Chassis	1
136	SUWG3152A	Angle	2
137	QMFG1036AA	Felt	1
SCREWS & WASHERS			
N1	XTB3+10AFVC	Screw	3
N2	XTS3+10AFVC	Screw	10
N3	XTB4+10B	Screw	3
N4	XTT4+10A	Screw	8
N5	XTW3+10JFZ	Screw	1
N6	XTV3+12GFZ	Screw	2
N7	XTW3+8T	Screw	28
N8	XTV3+12G	Screw	8
N9	XYN4+F20	Screw with Washer	4
N10	XTB35+12A	Screw	43
N11	SNEG2660A	Screw	5
N12	XTW3+10Q	Screw	5
N13	XTWSG2	Screw with Washer	1
N14	XTT4+20A	Screw	4
N15	XTW3+8J	Screw	8
N16	XSN4+6	Screw	2
N17	XNS12FZ	Nut	2
N18	XTB35+16A	Screw	12
N19	XTN4+50AFZ	Screw	2
N20	SNE499-1	Nut	8
N21	XTT4+12A	Screw	12
○ N22	QHDG006AB	Screw with Washer	7
N23	XSS3+6FZ	Screw	4
N24	XYN4+F10	Screw with Washer	1
N25	XSN12FZ	Nut	1
N26	SNE4021-1	Nut	1
N27	XTB3+12A	Screw	14
N28	XTT4+25AFVC	Screw	14
N29	QHDG004AA	Screw	2
N30	QHDG016AA	Screw with Washer	12
○ N31	XYN6+F40FZ	Screw with Washer	3
○ N32	XYN4+F20FVC	Screw with Washer	4
N33	XTW3+16JFZ	Screw	12
N34	XTB4+30A	Screw	2
N35	XYN4+F16FZ	Screw with Washer	3
N36	XTB35+14A	Screw	2
N37	XTW3+8E	Screw	7
N38	XTB3+6C	Screw	1
N39	SNEG1491A	Thumb Screw	2
N40	XTV3+10C	Screw	2
N41	XTW3+10T	Screw	27
N42	XTB4+12A	Screw	4
N43	XTB35+20A	Screw	2