ORDER NO. MB9003005C2

Service Manual

Compact Disc Player

SL-PJ27A



Color

(K)... Black Type

Area

Country Code	Area	Color
(E)	Continental Europe.	(K)
(EB)	Great Britain.	(K)
(EG)	F.R. Germany & Italy.	(K)

■ SPECIFICATIONS

■ Audio

No. of channels	2 (left and right, stereo)
Frequency response	2–20,000 Hz±0.5 dB
Output voltage	2 V (at 0 dB)
Dynamic range	96 dB
S/N ratio	96 dB
Total harmonic distortion	0.005% (1 kHz, 0 dB)
Harmonic distortion	0.003% (1 kHz, 0 dB)
Wow and flutter	Below measurable limit
Output impedance	Approx. 600Ω
Load impedance	More than 10 kΩ

■ Pickup

Wavelength	780 nm

■ General

Power supply	
For Great Britain:	AC 50/60 Hz, 240V
For others:	AC 50/60 Hz, 220V
Power consumption	10 W
Dimensions (W×H×D)	360x96x283 mm
Weight	3.4 kg

Specifications subject to change without notice.
Weight and dimensions shown are approximate.

■ CONTENTS

	Page
PLACEMENT	2
CLEANING OF LENS	2
ACCESSORIES	2
PRECAUTION OF LASER DIODE	3
LOCATION OF CONTROLS	4, 5
CONNECTIONS	6
DISASSEMBLY INSTRUCTIONS	7 ~ 10
MEASUREMENTS AND ADJUSTMENTS	11, 12
TERMINAL FUNCTIONS OF IC'S	13 ~ 16
INTERNAL CONNECTION OF FL	17
BLOCK DIAGRAM	18, 19
SCHEMATIC DIAGRAM	20 ~ 26
TERMINAL GUIDE OF IC'S, TRANSISTORS & DIODES	26
PRINTED CIRCUIT BOARDS	27 ~ 30
WIRING CONNECTION DIAGRAM	31
REPLACEMENT PARTS LIST	32 ~ 34
EXPLODED VIEWS	35 ~ 37
RESISTORS & CAPACITORS	38, 39
TROUBLESHOOTING GUIDE	40 ~ 42
PACKING	43

* TECHCNICAL INFORMATION

* This technical information is located on pp 49 ~ 56 of the SL-PJ46A Service Manual (Order No. AD8902036C2). Therefore, refer to that Service Manual.

Technics

Matsushita Electric Industrial Co., Ltd.
Central P.O. Box 288, Osaka 530-91, Japan

■ PLACEMENT

Before placement

Two transport security devices are secured to prevent the optical pickup from damage during transport.
Be sure to release them before use.

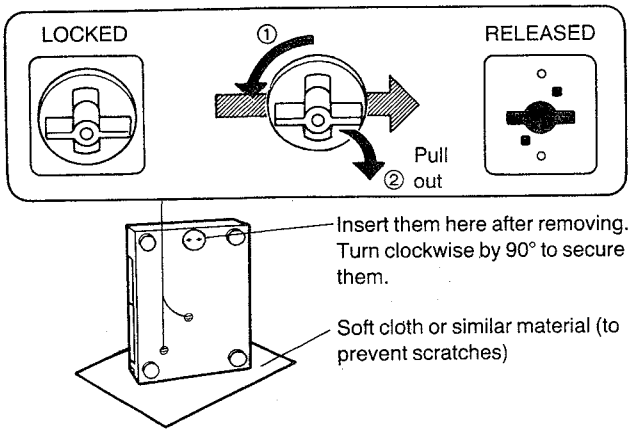

Note:
When transporting the unit, be sure to remove the compact disc from inside the unit. And replace the transport security devices again following the reverse order not to damage the optical pickup.

Notes of placement

■ **This unit is a precision instrument. Be sure to place it on a flat surface.**
■ **Avoid places such as the following:**
- Near any equipment or device that generates strong magnetism.
- On any heat-generating equipment or device, or in any place where the temperature is high (35°C or higher).
- Extremely cold places (5°C or below).
- Near a tuner or TV (It may cause noise in the broadcast, or disturbance of the TV picture.)

■ **When carrying or storing the unit, handle it with care so it is not subjected to any strong bumps.**
Always remove the disc before storing the unit for any period of time.
■ **To avoid problems due to vibration.**
- Do not place a book or similar object under this unit.
- Do not route the connection cables (of this or other units) across the operation panel, across the top, or under the unit.

■ CLEANING OF LENS

If the lens is stained causing sound skip or operation failure, open the top cover by pressing the open button, and clean the lens.

• To remove dust or dirt

Blow the lens with the blower provided in the cleaning kit to remove dust or dirt.

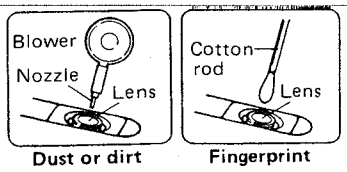

• To remove fingerprint

If the blower is not enough, moisten the cotton rod with the lens cleaner solution and wipe the lens with it from center of the lens to outside.

Cautions:
- Do not directly apply the cleaner solution to the lens. Do not apply too much solution to the cotton rod or otherwise the solution will flow into the player.
- Wipe the lens carefully. Do not give too much stress to the lens or otherwise it may scratch the lens or cause optical pickup trouble.
- If the solution should be too much applied, wipe the lens with a dry cotton rod.

Lens cleaning kit (Part No. : SZZP1038C)

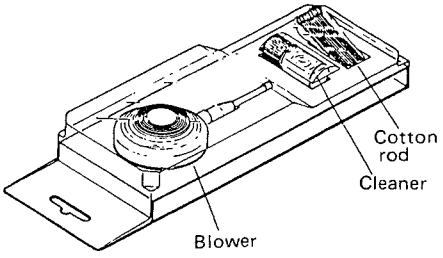

■ ACCESSORIES

- AC power supply cord 1
  [SFDAC05E03 (E, EG)
  SJA188 (EB)]
- L-type cable 1
  (SJP2257T)
- Stereo connection cable 1
  (SJP2249–3)

■ PRECAUTION OF LASER DIODE

CAUTION: This product utilizes a laser diode with the unit turned "on", invisible laser radiation is emitted from the pick up lens.
Wave length: 780 nm
Maximum output radiation power from pick up: 100 μW/VDE

Laser radiation from the pick up lens is safety level, but be sure the followings:

1. Do not disassemble the optical pick up unit, since radiation from exposed laser diode is dangerous.
2. Do not adjust the variable resistor on the pickup unit. It was already adjusted.
3. Do not look at the focus lens using optical instruments.
4. Recommend not to look at pick up lens for a long time.

ACHTUNG: Dieses Produkt enthält eine Laserdiode. Im eingeschalteten Zustand wird unsichtbare Laserstrahlung von der Lasereinheit abgestrahlt.

Wellenlänge: 780 nm
Maximale Strahlungsleistung der Lasereinheit: 100 μW/VDE

Die Strahlung an der Lasereinheit ist ungefährlich, wenn folgende Punkte beachtet werden:

1. Die Lasereinheit nicht zerlegen, da die Strahlung an der freigelegten Laserdiode gefährlich ist.
2. Den werksseitig justierten Einstellregler der Lasereinheit nicht verstellen.
3. Nicht mit optischen Instrumenten in die Fokussierlinse blicken.
4. Nicht über längere Zeit in die Fokussierlinse blicken.

ADVARSEL: I dette a apparat anvendes laser.

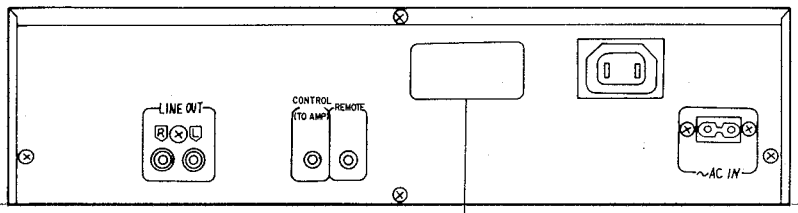

SQWD7



Obs:
Apparaten innehåller laser
Komponent av höger laserklass
än klass 1.

RQLS0022



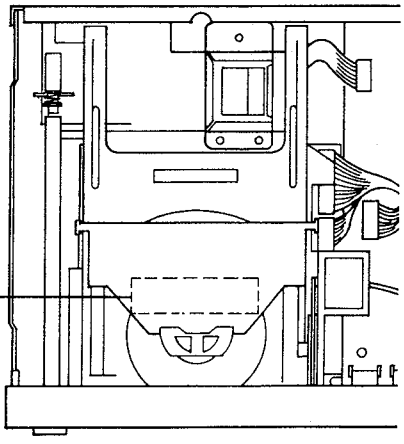

■ LOCATION OF CONTROLS

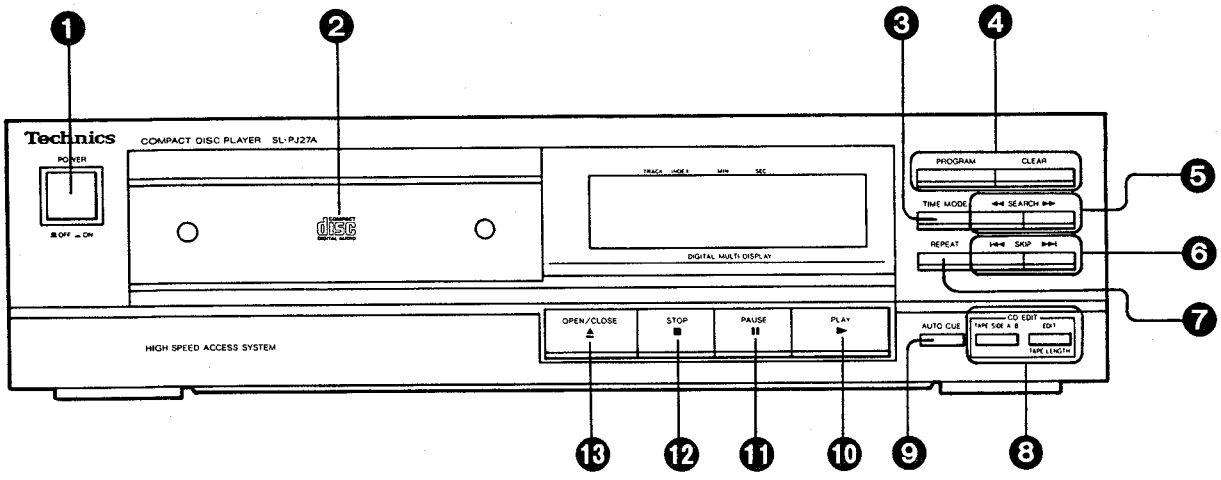

Control section

1 Power switch (POWER ■OFF ▁ON)

2 Disc holder

3 Time mode select button (TIME MODE)
Use this button to select the desired time display mode.

4 Buttons for program function

•Programmed-play button (PROGRAM)
Pressing this button initiates the programmed play mode. You can then enter specific tracks using the skip buttons.

•Clear button (CLEAR)
Each pressing this button makes one track cleared from the programmed sequence.

5 Search buttons (◀◀ SEARCH ▶▶)
These buttons can be used to move rapidly forward or backward on the disc during play. The search speed is slow when the button is pressed at first and becomes faster if the button is pressed and held continuously.

6 Skip buttons (|◀◀ SKIP ▶▶|)
These buttons can be used to specify the number of the desired track and the desired recording time of the tape.

7 Repeat button (REPEAT)

8 Buttons for CD edit function (CD EDIT)

•Edit tape length button (EDIT TAPE LENGTH)
When compact discs are to be recorded to tape, this button can be used to calculate the number of tracks that can be recorded on each side of the tape, depending on the length of the cassette tape used, so that as little tape as possible is wasted.

•Tape-side select button (TAPE SIDE A/B)
When recording compact discs to tape, this button can be used to check the number of tracks and amount of tape left over for side A or B.

9 Auto cue button (AUTO CUE)
Pressing this button causes the unit to skip automatically to the beginning of the next track on the disc and switch to the play standby mode.

10 Play button (▶ PLAY)

11 Pause button (❚❚ PAUSE)

12 Stop button (■ STOP)
This button can be used to stop the disc play, as well as to cancel the various play modes.

13 Disc holder open/close button (▲ OPEN/CLOSE)

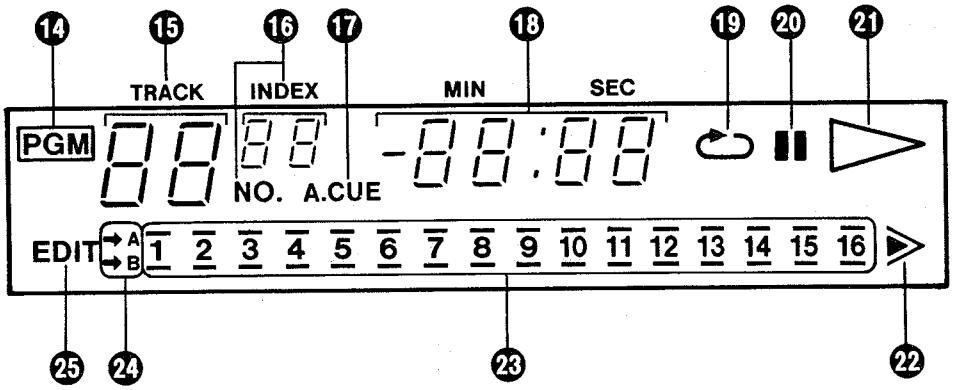

Indicators section

⑭ **Programmed-play indicator (PGM)**

⑮ **Track number display (TRACK)**

⑯ **Index/program number display (NO./INDEX)**

⑰ **Auto cue indicator (A. CUE)**

⑱ **Time display (MIN/SEC)**

⑲ **Repeat indicator**

⑳ **Pause indicator (II)**

㉑ **Play indicator**

㉒ **"Over" mark (▶▶)**
This indicator lights if the total number of tracks on the disc is 17 or more.

㉓ **Track number indicator (1 –16)**

㉔ **Tape side indicator (A/B)**

㉕ **Compact disc edit indicator (EDIT)**

If this unit is connected with Technics Hi-Fi component system whose remote control transmitter has ▶/II button for compact disc operation, the pause function may not be activated by pressing the ▶/II button during compact disc play.

■ CONNECTIONS

Notes:
- Turn power off on all components before making connections.
- See the operating instructions of the tuner for details.

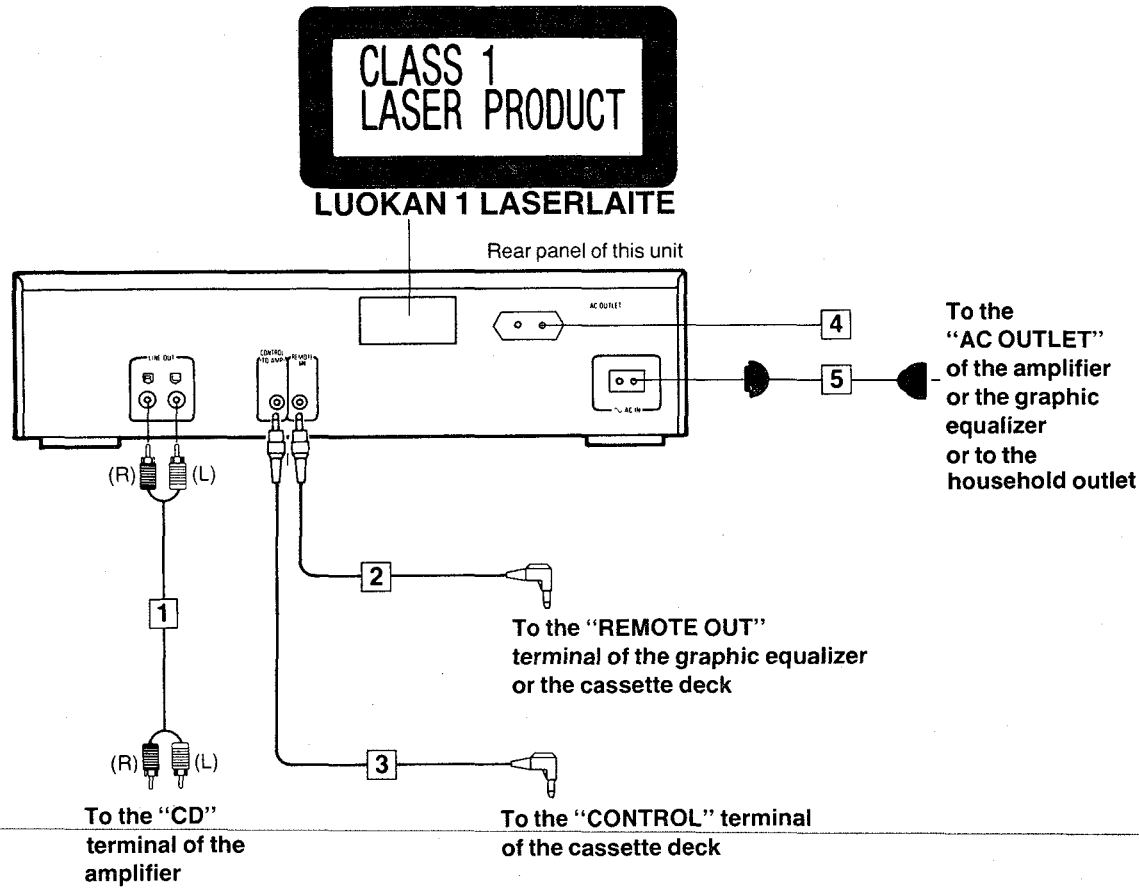

1 Stereo connection cable (included)

2 L-type cable (included)
This cable can be used only with a Technics graphic equalizer or a cassette deck having the appropriate "REMOTE OUT" terminal.
Note:
To use this unit with the system X90D or X50D, connect this L-type cable to the "REMOTE OUT" terminal of the tuner (instead of the cassette deck).

3 L-type cable (included)
This cable can be used only with a Technics amplifier having the appropriate "CONTROL" terminal.
Note:
To use this unit with the system X90D or X50D, connect this L-type cable to the "CONTROL" terminal of the cassette deck.

4 "UNSWITCHED" outlet
Power is always available, regardless of power switch.
This outlet is exclusively for the connection of other audio equipment, such as a tape deck, etc. Be sure the power consumption does not exceed the wattage specified near the AC outlet.

5 AC power supply cord (included)
Note:
The configuration of the AC outlet and AC power supply cord differs according to area.

■ DISASSEMBLY INSTRUCTIONS

Warning: This product uses a laser diode. Refer to caution statements on page 3.

ACHTUNG: • Die lasereinheit nicht zerlegen.
• Die lasereinheit darf nur gegen eine vom hersteller spezifizierte einheit ausgetauscht werden.

*** This CD player is equipped with FPC board, so handle them with care during disassembly and reassembly.**

Ref. No. 1	Removal of the cabinet
Procedure 1	1. Remove the 5 screws (❶ ~ ❺).

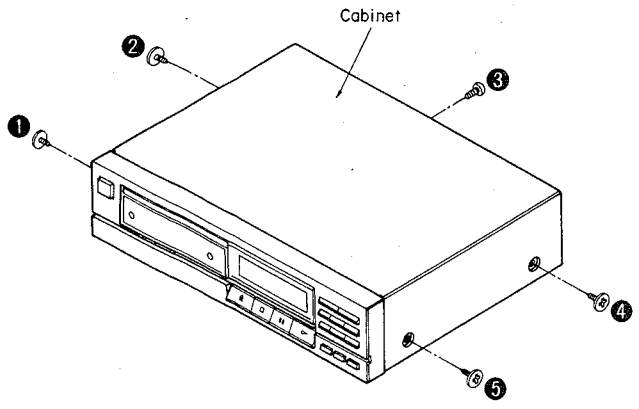

Ref. No. 2	Removal of the ornament of disc holder and the front panel
Procedure 1→2	**A. Ornament of disc holder** 1. Push the disc holder slowly in the direction of the arrow. 2. Release the 1 claw and the ornament in the direction of the arrow (Ⓐ). **B. Front panel** 1. Remove the 2 screws (❶, ❷). 2. Slightly pull out the front panel in the direction of the arrow (Ⓑ). 3. Remove the front panel in the direction of the arrow (Ⓒ).

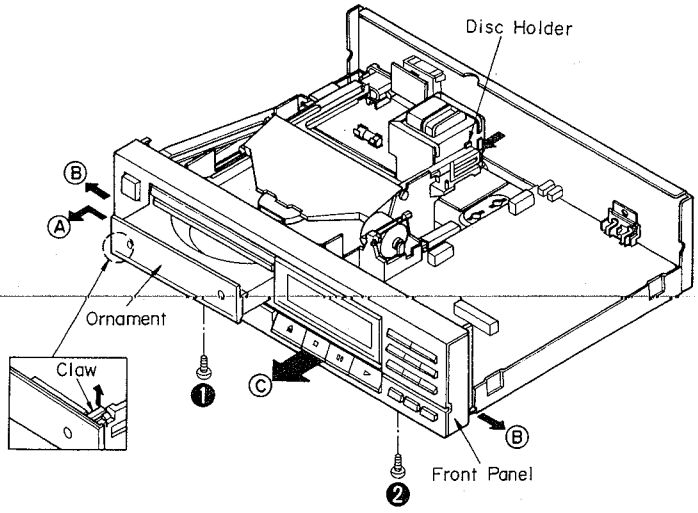

Ref. No. 3	Removal of the operation P.C.B.
Procedure 1→2→3	1. Remove the 4 screws (❶ ~ ❹). 2. Release the 8 claws.

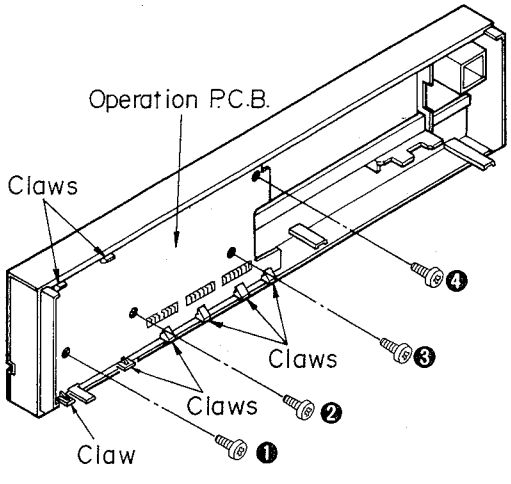

Ref. No. 4	Removal of the main P.C.B.
Procedure 1→2→3→4	1. Remove the 4 screws (❶~❹). 2. Remove the 4 connectors (CN11, CN12, CN401, CN431). 3. Lift the main P.C.B. off the retention posts on the chassis. 4. Remove the main P.C.B. in the direction of the arrow.

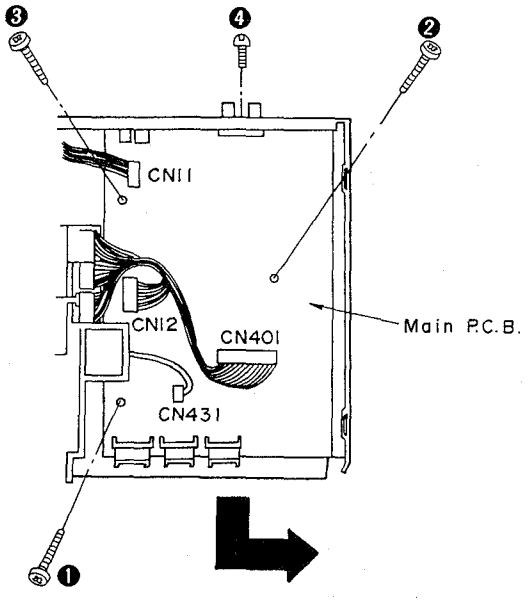

How to check the main P.C.B.

When checking the soldered surface of the main P.C.B. and replacing the parts, do as shown below.

1. Connect the main P.C.B. ground terminal (LINE OUT terminal) to the chassis with a lead wire.
2. Connect the operation P.C.B. ground terminal to the chassis with a lead wire.

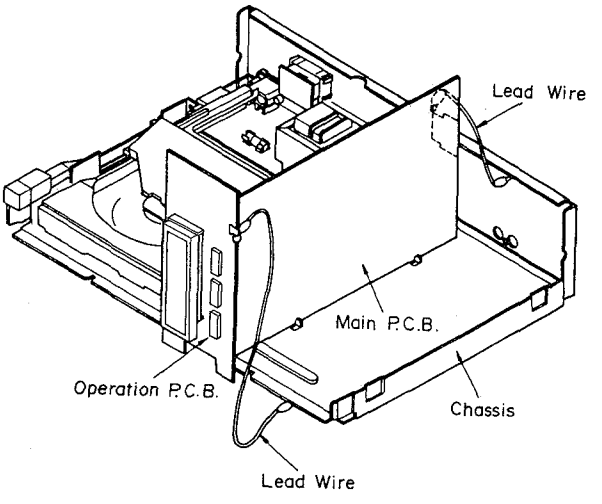

Ref. No. 5	Removal of the disc lid and holder
Procedure 1→5	1. Remove the spring. 2. Move the disc lid in the direction of the arrow (Ⓐ) and pull out this in the direction of the arrow (Ⓑ). 3. Pull out the holder in the direction of the arrow (Ⓒ).

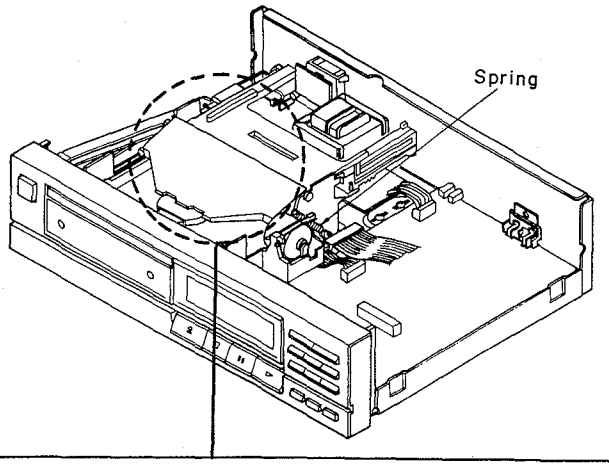

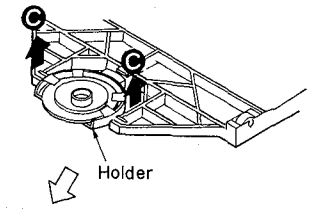

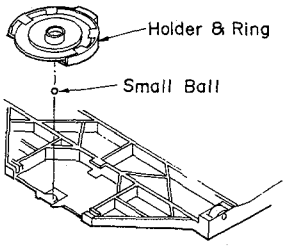

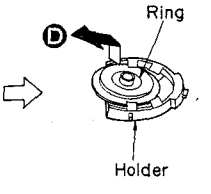

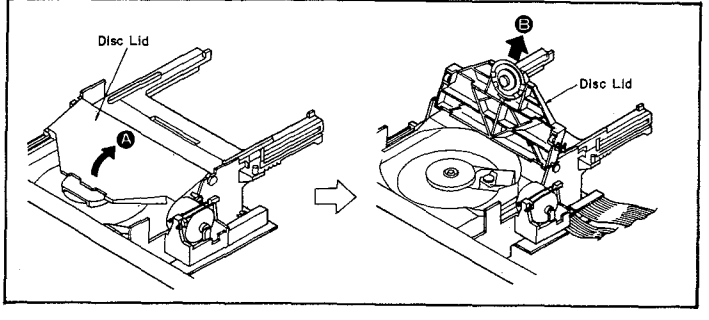

Caution: Be sure to handle the small ball carefully.

4. Remove the ring in the direction of the arrow (Ⓓ).

Ref. No. 6	Removal of the disc holder and power switch rod
Procedure 1→2→5→6	

A. Disc holder

1. Pull the disc holder slowly in the direction of the arrow until the disc tray comes up.
2. Pull the disc holder until it stops.
3. Push the bracket of tray SW (S1001) in the direction of the arrow.
4. Pull out the disc holder further to remove it.

B. Power switch rod

1. Set the power switch in the "OFF" position.
2. Remove the power switch rod by using a screwdriver.

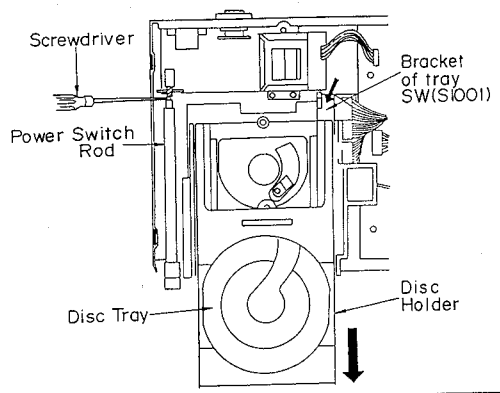

Ref. No. 7	Removal of the loading unit
Procedure 1→2→5→6→7	

1. Remove the 3 screws (❶~❸).
2. Remove the 3 connectors (CN12, CN401, CN431).

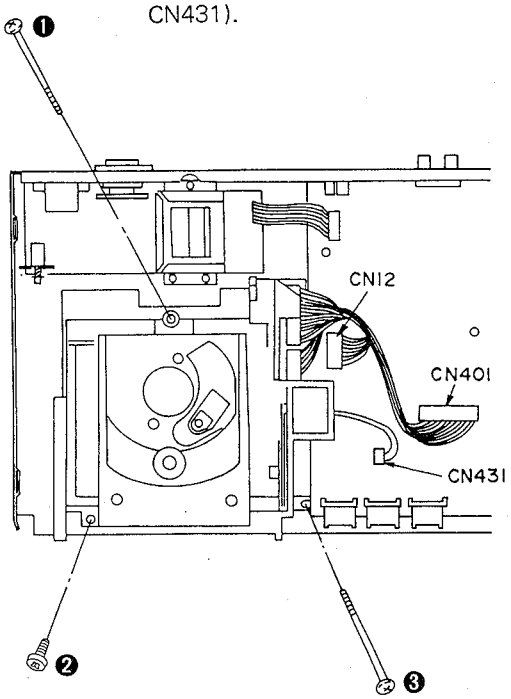

Ref. No. 8	Checking of the servo P.C.B.
Procedure 1→2→5→6 →7→8	

• When checking the soldered surface of the servo P.C.B. and replacing the parts, do as shown below.

Note: Insert the loading unit into the tabs of the front panel. (Fixed loading unit)
Secure the optical pickup assembly with a clip. (Otherwise the clamper will interfere with the disc, restricting turntable rotation.)

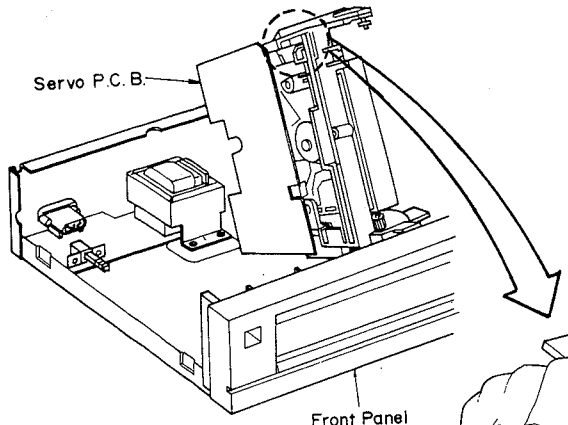

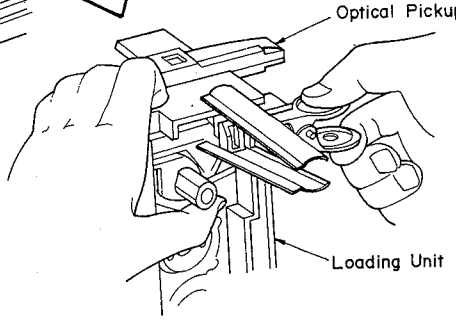

(To play a disc)

1. Place the test disc.
2. Reinstall the disc lid to the loading unit.
3. Turn "ON" the power switch of the player.
4. Push the bracket of tray SW (S1001) in the direction of the arrow and release it.

Note: If the test disc fails to rotate, press the tray switch again.

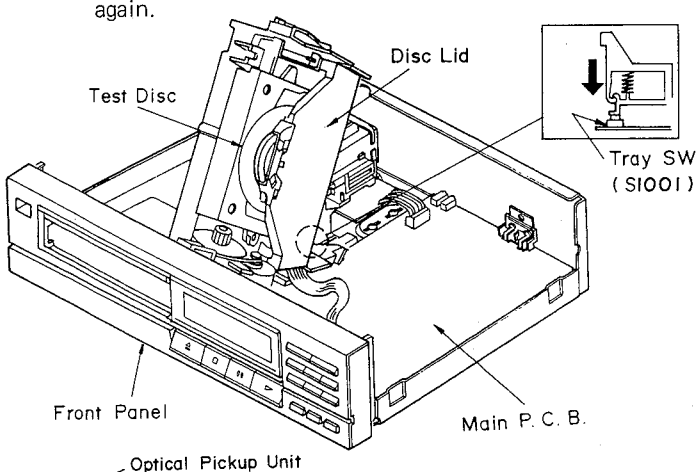

Ref. No. 9	Removal of the servo P.C.B.
Procedure 1→2→5 →6→7→9	

1. Remove the 4 screws (❶ ~ ❹).
2. Remove the FPC board (CN101) from the optical pickup.
3. Remove the 1 connector (CN102) of the turntable motor.

Caution : To prevent the breakdown of the laser diode, antistatic shorting pin is inserted into the FPC board.

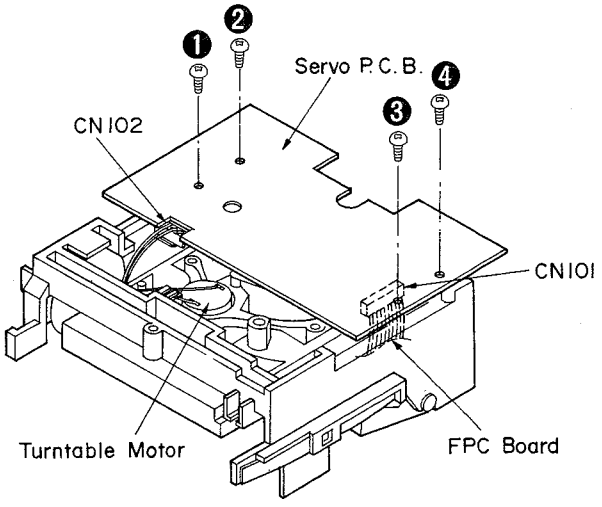

Ref. No. 10	Removal of the loading motor
Procedure 1→2→5 →6→10	

1. Remove the drive belt.
2. Release the clamping spring.
3. Unsolder the 2 terminals of the lead wire of the loading motor.

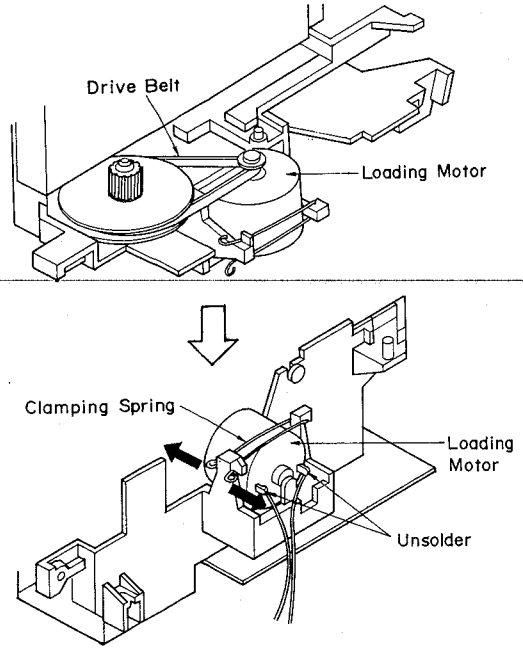

Ref. No. 11	Removal of the optical pickup unit
Procedure 1→2→5→6 →7→9→11	

1. Remove the 4 screws (❶ ~ ❹).
2. Remove the FPC board from the optical pickup.

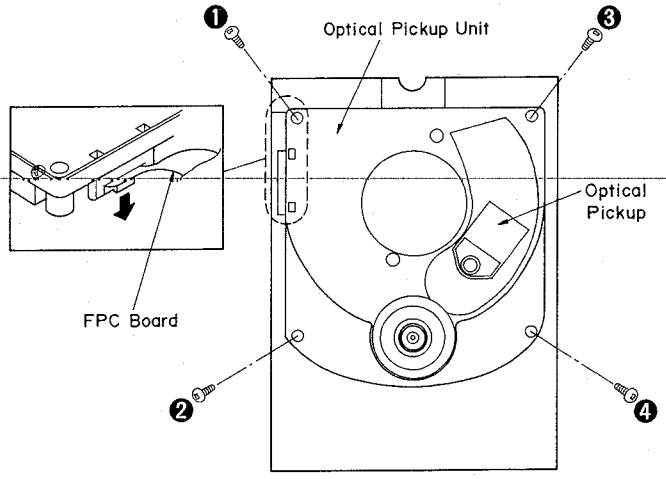

Ref. No. 12	Removal of the power supply P.C.B.
Procedure 1→2→5→6 →12	

1. Remove the 5 screws (❶ ~ ❺).
2. Remove the 1 connector (CN11).
3. Unsolder the 2 terminals.

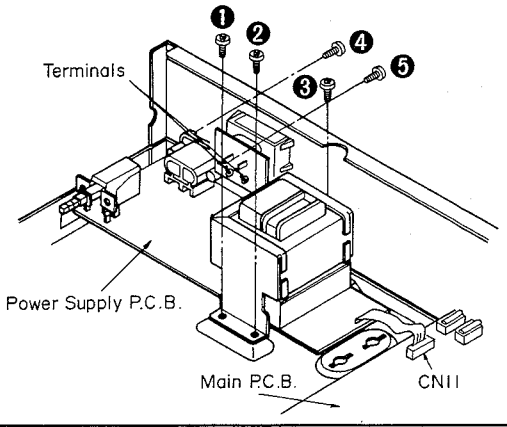

■ MEASUREMENTS AND ADJUSTMENTS

Caution:
1. It is very dangerous to look at or touch the laser beam. (Laser radiation is invisible.)
   With the unit turned "on", laser radiation is emitted from the pickup lens.
   Avoid exposure to the laser beam, especially when performing adjustments.
2. During laser power or focus offset adjustment, never connect the other probe to the unit.
   (Otherwise the unit's power supply will sustain damage.)

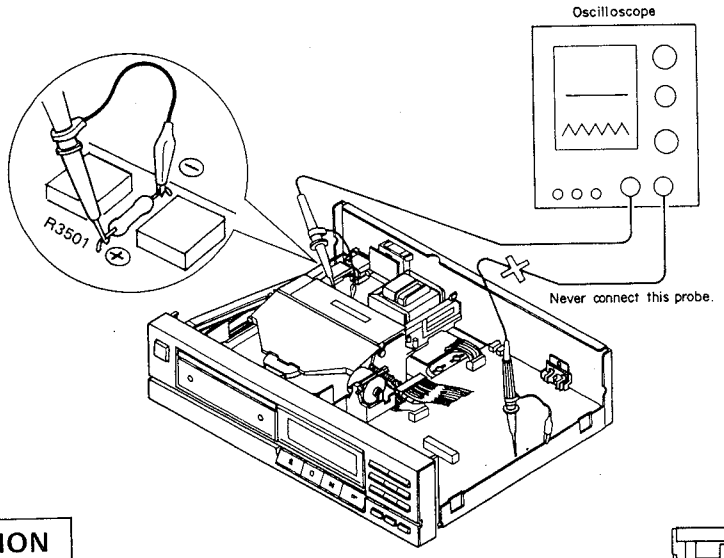

PREPARATION

1. Remove the cabinet (see Ref No. 1 of the disassembly instructions.)
2. Remove the disc holder (see Ref No. 6 of the same).
3. Place the test disc on the turntable.
4. Turn "ON" the power switch at the player.
5. Push the bracket of tray SW (S1001) in the direction of the arrow and release it.

Note: If the test disc fails to rotate, press the tray switch again.

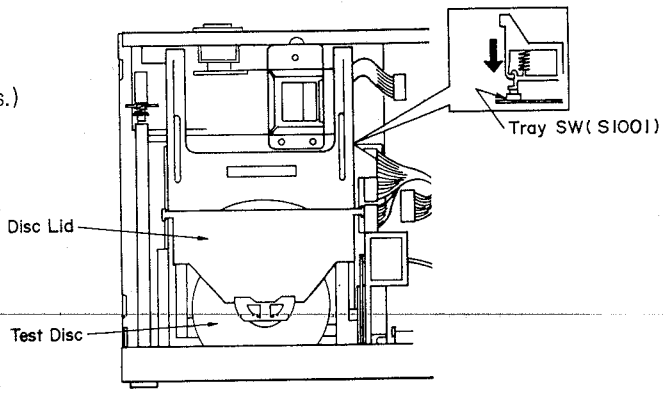

ADJUSTMENT POINTS

• Servo P.C.B.

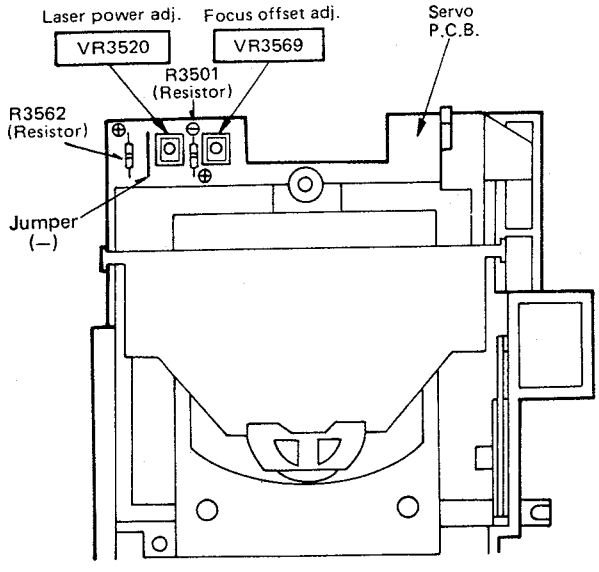

• Main P.C.B.

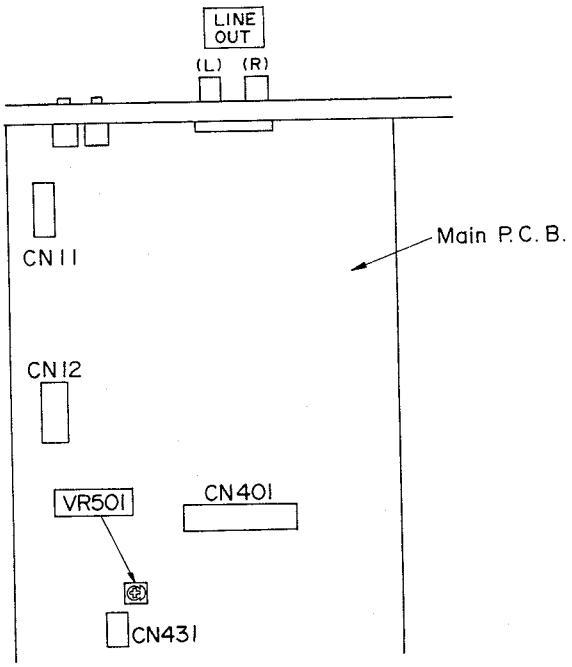

Measuring Instruments

* Playability test disc (SZZP1054C).
* Normal disc.
* Dual-beam oscilloscope with bandwidth of 30MHz or better (with EXT trigger and 1:1 probe).

(1) LASER POWER ADJUSTMENT

1. Connect the oscilloscope's CH1 probe across (+) and (−) of **R3501** (Resistor) on the servo-P.C.B.
2. Switch the player power ON, and play track No. 1 on the test disc (SZZP1054C).
3. Adjust **VR3520** so that the voltage is **−50 ± 2mV.**

Oscilloscope setting:

VOLT . . . . . 20mV INPUT . . . . . DC
SWEEP . . . . . 0.2msec.

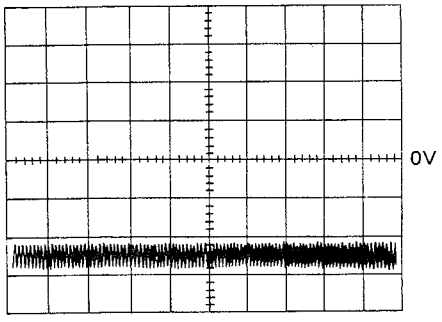

(2) FOCUS OFFSET ADJUSTMENT

1. Connect the oscilloscope's CH1 probe scross **R3562** (Resistor)(+) and **Jumper**(−) on the servo P.C.B.
2. Switch the player power ON, and play track No.1 on the test disc (SZZP1054C).
3. Adjust **VR3569** until the signal amplitude become in the center of **400mV.**

Oscilloscope setting:

VOLT . . . . . 200 mV INPUT . . . . . DC
SWEEP . . . . . 5msec.

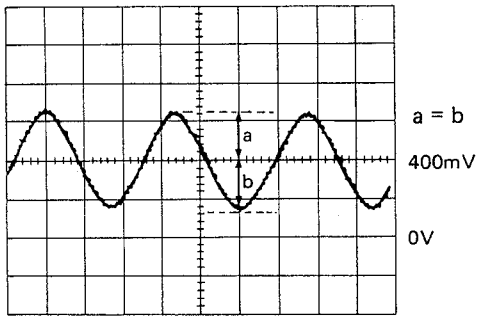

(3) PLL ADJUSTMENT

1. Connect CH1 of the oscilloscope to the **LINE OUT terminal** (either of Lch or Rch) and **ground.**
   Oscilloscope setting: VOLT 1V
   SWEEP . . . . . 1msec.
   INPUT . . . . . DC
2. Switch the player power ON, and play track No. 6 (wedge 0.7mm) on the test disc (SZZP1054C).
3. Check the waveform displayed on the oscilloscope and adjust **VR501** in the following steps.
   Step 1. Turn **VR501** clockwise slowly and observe the point at which the waveform on the oscilloscope begins to be disturbed.
   Step 2. Turn **VR501** counterclockwise slowly and observe the point at which the waveform on the oscilloscope begins to be disturbed.
   Step 3. Set **VR501** in the middle between the points observed in the above steps "1" and "2".

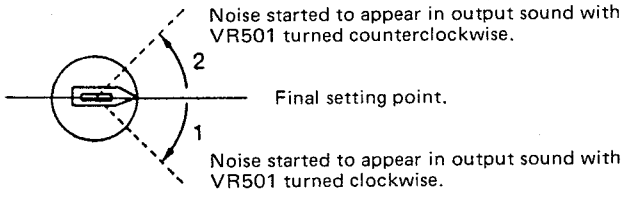

• **NG**

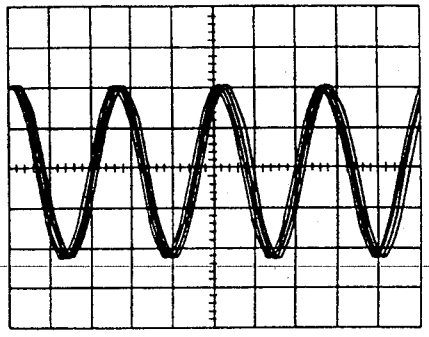

• **OK**

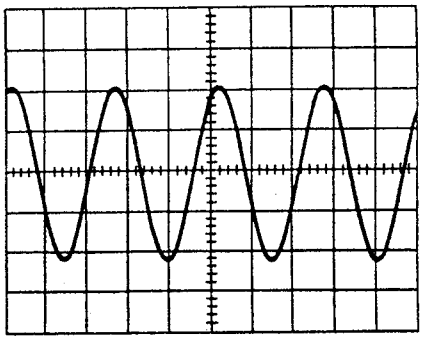

(4) CHECK OF PLAY OPERATION AFTER ADJUSTMENT

*** Checking Skip Search**

1. Play an ordinary musical program disc.
2. Press the skip button to check for normal skip search operation (in both the forward and reverse directions).

*** Checking Manual Search**

1. Play an ordinary musical program disc.
2. Press the manual search button to check for smooth manual search operations at either low or high speed (in both the forward and reverse directions).

*** Playability check by test disc**

1. Play the 0.7 mm black dot and the 0.7 mm wedge on the defect test disc (SZZP1054C) and verify that no sound skip or noise occurs.

■ TERMINAL FUNCTIONS OF IC'S

• IC6501 (TDA8808T): Photo diode signal processor

Pin No.	Mark	I/O Division	Function
1	GCHF	I	Gain control input of HF amplifier. Current output from HF amplitude detector
2	Vp	I	Positive supply voltage
3	HFout	O	HF amplifier and equalizer voltage output
4	DET	I	HF detector voltage input
5	Sc	I	Starting up capacitor input
6	Si/$\overline{RD}$	I/O	On/off control (start input); ready signal output (starting up procedure successful)
7	Beq	I	Equalizer reference current input
8	Bgc	I	DC and LF gain control reference current input
9	FOC START	I	Focus normalizing circuit starting current
10	PLLH	O	PLL on hold output
11	$\overline{TL}$	O	Track loss output
12	$\overline{DODS}$	I	Drop out detector suppression input
13	Vext	I	Negative supply connection for FE and FElag output stage; also substrate connection
14	LPF	O	Low pass filter for Iret, used in track loss ($\overline{TL}$) detector and LF gain control
15	FE	O	Current output of normalized, switched focus error signal
16	FElag	O	Current output of switched focus error signal, intended for lag network
17	LO	O	Laser amplifier current output
18	LM	I	Laser monitor diode input
19	GCLF	I	Gain control input for AC and LF amplifiers. Current output from LF amplitude detector
20	Re2	O	Summation of amplified currents from D3 and D4
21	Re1	O	Summation of amplified currents from D1 and D2
22, 23	D1, D2	I	Current inputs to DC and LF photo diode amplifier
24, 25	D3, D4	I	Current inputs to DC and LF photo diode amplifier
26	HFin	I	Current input to HF amplifier
27	GND	I	Ground connection of device
28	DEC	I	Decoupling input (internal bypass)

• IC6503 (TDA8809T): Radial error signal processor

Pin No.	Mark	I/O Division	Function
1	Vp	I	Positive supply voltage
2	Cosc1	I	Frequency setting capacitors for oscillator
3	Cosc2		
4	Rwob	I	Wobble generator input
5	Rosc	I	Biassing resistor for oscillator frequency and internal amplitude
6	$\overline{DIV4}$	I	Divide-by-4 input
7	REdig	O	Digital output of sign (Re2 – Re1)
8	B3	I	Input control bits for off-, catch-, play-status and DAC output current
9	B2		
10	B1		
11	B0		
12	Vext(+)	I	Positive external voltage input
13	Vext(–)	I	Negative external voltage input (also substrate connection)
14	GND	I	GND terminal
15	RADout	O	Current output of amplified (Re2 – Re1) input currents
16	REin	I	Radial error input
17	RElag	O	Voltage output of integrated (Re2 – Re1) input currents
18	Lag	I	Connection of integrator capacitor for (Re1 – Re2) input currents
19	Lead	O	Lead output
20	Vref	I	Internal reference voltage output
21	AGC	I	Gain control input for radial error signal
22	RDAC	O	Biassing resistor for current output for track jumping (3½ bits)
23	offset in	I	Offset control input for radial offset
24	offset off	O	Offset control output for radial offset
25	CLPF	I	Low-pass filter for Re1 and Re2, used for radial offset control
26	CHPF	I	High-pass filter for Re1 and Re2, used for radial offset control
27	Re1	I	Input for amplified currents from photo-diodes D1 and D2
28	Re2	I	Input for amplified currents from photo diodes D3 and D4

• IC301 (MN6625): Digital signal processor

Pin No.	Mark	I/O Division	Function
1	BYTCK	O	Serial data byte clock (Not used, open)
2	FCLK	O	Crystal frame clock (Not used, open)
3	DEMPH	O	De-emphasis ON signal (de-emphasis ON at "H")
4	SRDATA	O	Serial data output (MSB first)
5	SCLK	O	Serial bit clock output
6	LRCK	O	LR discrimination clock (88.2kHz)
7	WDCK	O	Serial data output word clock (Not used, open)
8	LDG	O	L channel deglitch signal (Not used, open)
9	RDG	O	R channel deglitch signal (Not used, open)
10	IPFLAG	O	Interpolation flag (interpolation at "H") (Not used, open)
11	FLAG	O	Error flag terminal (Not used, open)
12	XCK	O	Clock (16.9344MHz) output (Not used, open)
13	TEST	I	Test mode selection (Not used, connected to +4.9V)
14	TX	O	Digital signal output (Not used, open)
15	SLEEP	I	Mode selector ("L":normal, "H":SLEEP mode) (Not used, connected to GND)
16	CSEL	I	Test terminal ("L": normal) (Not used, connected to GND)
17	X1	I	Clock input (16.9344MHz)
18	X2	O	Clock output (16.9344MHz) (Not used, open)
19	VSS	I	GND terminal
20	BLKCK	O	Sub-code Q data block clock (75Hz)
21	$\overline{\text{CLDCK}}$	O	Sub-code frame clock (7.35kHz)
22	$\overline{\text{SUBQ}}$	O	Sub-code Q data
23	$\overline{\text{RST}}$	I	Reset command
24	MLD	I	Load command for mode control data
25	MCLK	I	Data clock for MDATA
26	MDATA	I	Mode control data
27	DMUTE	I	Data mute command
28	$\overline{\text{TRON}}$	I	Tracking servo ON signal (tracking servo ON at "L")
29	STAT	O	Status command for CRC etc. . .
30	SUBC	O	Sub-code serial output data (Not used, open)
31	SBCK	I	Clock for sub-code serial output (Not used, open)
32	SMCK	O	System clock (4.2336MHz)
33	VDD	I	Power supply (connected to +4.9V)
34	MEMP	I	Deemphasis command
35	FG	I	Turntable motor FG signal input (Not used, open)
36	PC	O	Turntable motor ON command (ON at "L")
37	EC	O	Turntable motor drive signal
38	RESY	O	Resynchronizing signal (Not used, open)
39	DO	I	Drop-out detection signal (Drop-out at "H")
40	SRF	I	Sliced RF signal
41	EFM	I	Modulation data
42	PCK	I	PLL extract clock (4.2336MHz)
43	FPC	O	PLL frequency comparision signal
44 ⟆ 51	D7 ⟆ D0	I/O	16K RAM data input/output
52	RAM OE	O	Read out enable
53	RAM WE	O	Write enable
54 ⟆ 64	RAM A0 ⟆ RAM A10	O	16K RAM address signal (RAMA0: LSB, RAMA10: MSB)

• IC401 (MN187164PJW3): System control & FL drive

Pin No.	Mark	I/O Division	Function
1 ~ 7	SEG6 ~ SEG0	O	FL segment signal
8	VPP	I	FL drive power supply (connected to −31.4V)
9	VDD	I	Power supply (Connected to 4.9V)
10	OSC2	I	Clock terminal
11	OSC1	I	Clock input
12	VSS	–	GND terminal
13	XI	I	Digital input of sign (Re2 – Re1)
14	XO	–	Net used, open
15	P27	O	Synchro rec control terminal
16	P26	O	Loading motor control signal
17	P25	O	Muting control signal
18	P24	I/O	On/off control (start input); ready signal output (starting up procedure successful)
19 ~ 22	P23 ~ P20	O	Output control bits for off-, catch-, play- status and DAC output current
23	IRQ1	I	Remote control signal
24	IRQ0	I	Digital input of sign (Re2 – Re1)
25	P13	O	Mode control data
26	P12	O	Data clock for MDATA
27	P11	O	Load command for mode control data

Pin No.	Mark	I/O Division	Function
28	P10	I	Track loss input
29	RST	I	Reset command
30	P05	I	Sub-code frame clock (7.35 kHz)
31	P04	I	Sub-code Q data
32	P03	I	Disc holder open/close det. signal input
33	SBT0	I	Sub-code Q data block clock (75 Hz)
34	SB0	O	Drop out detector/Tracking servo ON signal output
35	P00	I	Status command for CRC etc.
36	SYNC	–	Not used, open
37	CM	–	GND terminal
38	P47	O	Divide-by 4 output
39	P46	O	Deemphasis command
40	P45	I	PLL on hold input
41 ~ 45	P44 ~ P41	I	Key return signal and key scan signal.
46 ~ 61	DGT0 ~ DGT15	O	FL digit signal and key scan signal
62	P61	O	Synchro rec control signal
63 ~ 64	SEG8 SEG7	O	FL segment signal

• IC501 (AN8371S): Data slice and PLL

Pin No.	Mark	I/O Division	Function
1	VEE	I	Power supply (connected to –5.2V)
2	SRF	O	Sliced RF signal
3	EFM	O	Modulation data
4	D.GND	I	GND terminal (digital system)
5	PCK	O	PLL extract clock (4.2336MHz)
6	VCC	I	Power supply (connected to +4.9V)
7	VA	I	VCO free run frequency adjusting current input (Not used, open)
8, 9	VC1, 2	I	Capacitor connection for VCO oscillator frequency
10	VR	I	Resistor connection for VCO oscillator frequency
11	PD	I	Capacitor connection for PLL DO protection
12	PL1	I	PLL loop filter connection
13	PL2	I	PLL loop filter connection
14	FPC	I	PLL frequency comparison signal
15	RF	I	Data
16	ARF	O	RF signal output with AGC output
17	AGC	I	ARF signal input for AGF drop-out detection input
18	AC	I	Loop filter for AGC connected
19	DO	O	Drop-out detection signal
20	A.GND	I	GND terminal (analog system)
21	DSL	I	RF signal input for data slicing
22	SLC	I	Slicing level control signal input (Not used, connected to GND)
23	FC1	I	Filter capacitor for data slicer connected
24	FC2	I	Filter capacitor for data slicer connected

• IC801 (MN6474): Digital filter and D/A converter

Pin No.	Mark	I/O Division	Function
1	MLD	I	Command load input (load: L)
2	RSTB	I	Reset command
3	IE	I	Not used, connected to GND
4	TP1	—	TEST terminal
5	TP2	—	
6	TEST1	I	TEST terminal 1 (connected to GND)
7	TEST2	I	TEST terminal 2 (connected to GND)
8	NC	—	Not connected
9	NC	—	Not connected
10	AVDD4	I	Power supply (connected to +4.7V)
11	OUTL (–)	O	Lch data output, (–) terminal
12	AVSS4	I	GND terminal
13	AVSS3	I	GND terminal
14	OUTL (+)	O	Lch data output, (+) terminal
15	AVDD3	I	Power supply (connected to +4.7V)
16	NC	—	Not connected
17	AVDD2	I	Power supply (connected to +4.7V)
18	OUTR (+)	O	Rch data output, (+) terminal
19	AVSS2	I	GND terminal (analog system)
20	AVSS1	I	GND terminal (analog system)
21	OUTR (–)	O	Rch data output, (–) terminal
22	AVDD1	I	Power supply (connected to +4.7V)
23	DVDD1	I	Power supply (connected to +4.8V)
24	DVSS1	I	GND terminal (digital system)
25	X2	O	Clock output
26	X1	I	Clock input
27	NC	—	Not connected
28	DVDD2	I	Power supply (connected to +4.8V)
29	DVSS2	I	GND terminal (digital system)
30	NSUB	I	Sub-strate terminal (Not used, connected to +4.8V)
31	ZFLGB	O	Zero input detector terminal (Not used, open)
32	192fs	O	192 fs (8.4672MHz) (Not used, open)
33	LRPOL	I	LR clock selector (Not used, connected to +4.8V)
34	LRCLK	I	LR discrimination signal input
35	BCLK	I	Serial bit clock input
36	SRDATA	I	Serial data input (MSB first)
37	DVSS 3	I	GND terminal (digital system)
38	DVDD	I	Power supply (connected to +4.8V)
39	384 fs	O	384 fs (16.9344MHz) output
40	PD	I	Power down terminal (Not used, connected to GND)
41	MDATA	I	Mode control data
42	MCLK	I	Data clock for MDATA

■ INTERNAL CONNECTION OF FL

• Grid assignment

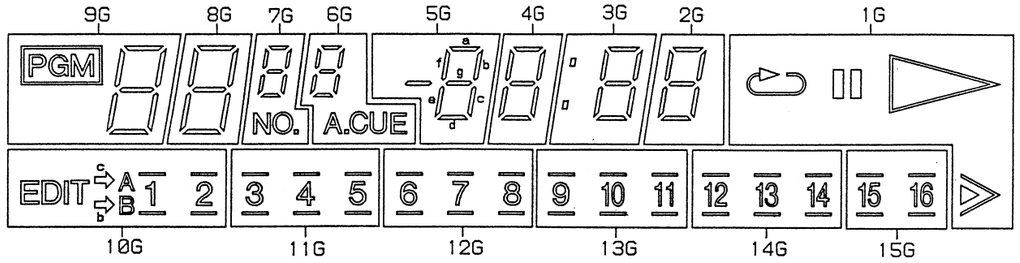

• Anode connection

	15G	14G	13G	12G	11G	10G	9G	8G	7G	6G	5G	4G	3G	2G	1G
a	15	12	9	6	3	EDIT A/B	a	a	a	a	a	a	a	a	▷
b	(15)	(12)	(9)	(6)	(3)	→	b	b	b	b	b	b	b	b	▮▯
c	(15)	(12)	(9)	(6)	(3)	→	c	c	c	c	c	c	c	c	-
d	16	13	10	7	4	1	d	d	d	d	d	d	d	d	-
e	(16)	(13)	(10)	(7)	(4)	(1)	e	e	e	e	e	e	e	e	↻
f	(16)	(13)	(10)	(7)	(4)	(1)	f	f	f	f	f	f	f	f	-
g	-	14	11	8	5	2	g	g	g	g	g	g	g	g	-
h	-	(14)	(11)	(8)	(5)	(2)	PGM	-	NO.	-	—	-	•	-	▶
i	-	(14)	(11)	(8)	(5)	(2)	-	-	-	A.CUE	-	-	-	-	▷

• Pin connection

PIN NO.	36	35	34	33	32	31	30	29	28	27	26	25	24	23	22	21	20	19	18	17	16	15	14	13	12	11	10	9	8	7	6	5	4	3	2	1
CONNECTION	F2	F2	NP	NP	a	b	c	d	e	f	g	h	i	15G	14G	13G	12G	NP	NP	NP	NP	11G	10G	9G	8G	7G	6G	5G	4G	3G	2G	1G	NP	NP	F1	F1

Note 1.)NP·····No pin.
2.)F1,F2·····Filament
3.)1G~15G·····Grid

■ BLOCK DIAGRAM

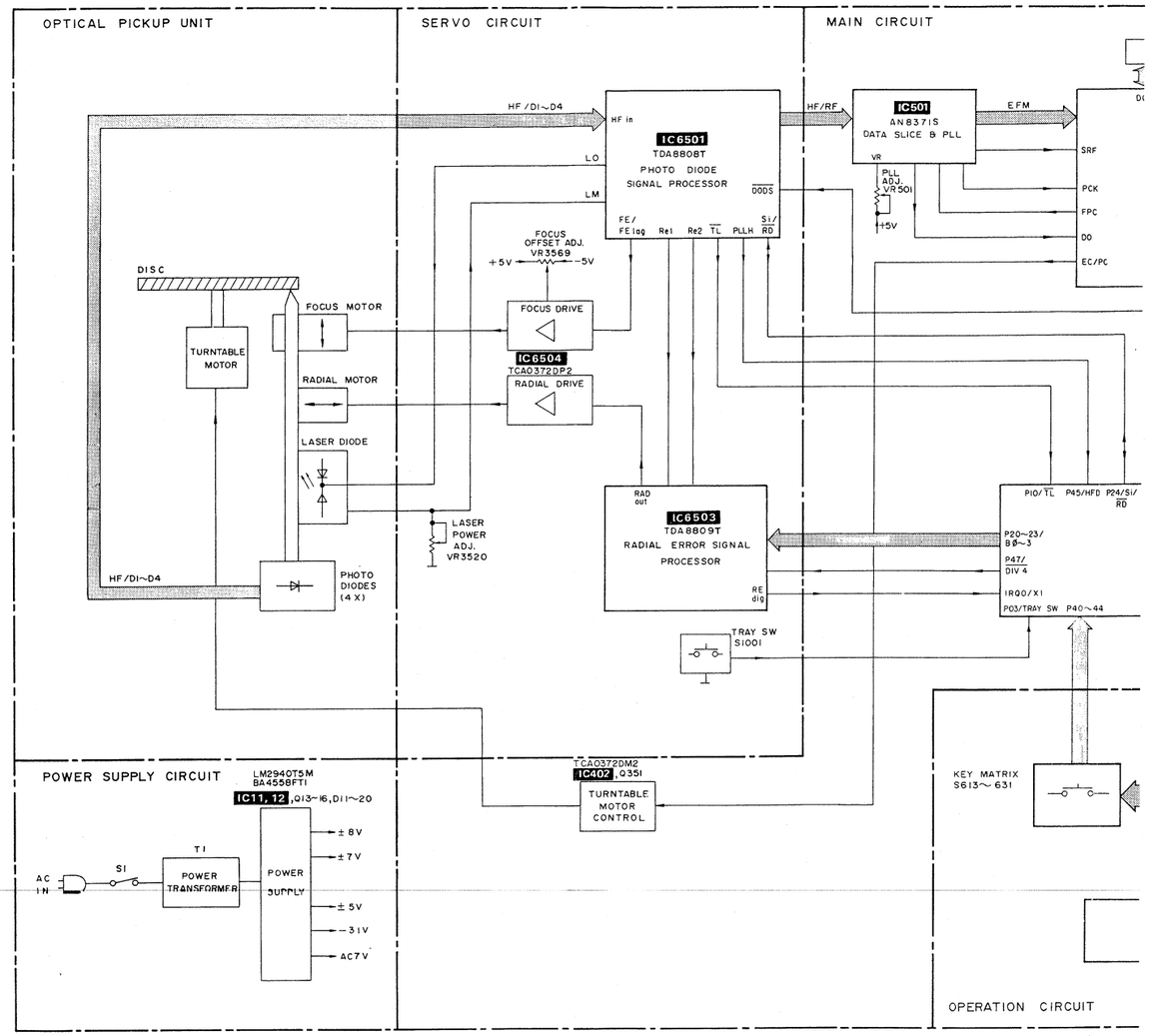

RAD out	:	Current output of integrated (Re2 – Re1) input currents.
B0 ~ B3:	:	Control bits for radial circuit.
$\overline{DODS}$	:	Drop out detector supression.
D1 ~ D4	:	Photodiode currents.
FE	:	Focus error signal.
FE lag	:	Focus error signal for LAG network.
HF	:	HF output for DEMOD.
HFD (PLLH)	:	HF detector output for DEMOD.
HFin	:	HF current input.
LM	:	Laser monitor diode input.
LO	:	Laser amplifier current output.
Re1	:	Radial error signal 1 (summation of amplified currents D3 and D4).
Re2	:	Radial error signal 2 (summation of amplified currents D1 and D2).
RE dig (IRQO/XI)	:	Radial error digital.
RE lag	:	Radial error signal for LAG network.
Si/$\overline{RD}$	:	On/off control for laser supply and focus circuit.
$\overline{TL}$	:	Track loss signal.
$\overline{Div4}$	:	Radial error digital devided by four.
HF/RF	:	Data.
D0	:	Drop-out detection signal (Active High).
SRF	:	Sliced RF signal.
EFM	:	Modulation data.
PCK	:	PLL extract clock (4.2336MHz).
FPC	:	PLL frequency comparison signal.
STAT	:	Status command for CRC etc.
DMUTE	:	Data mute command.
MDATA	:	Mode control data.
MLD	:	Load command for mode control data (Active Low).

■ BLOCK DIAGRAM

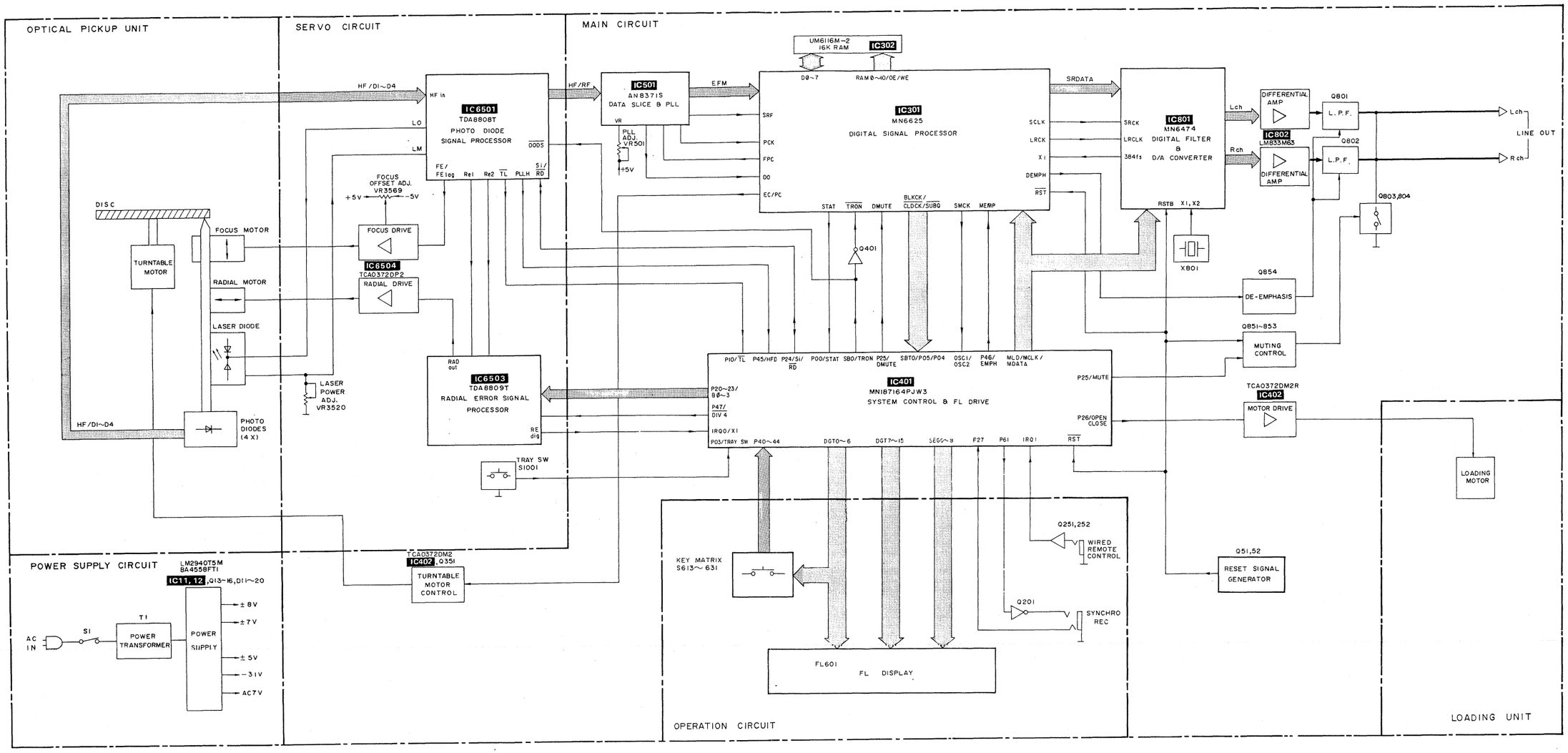

RAD out	:	Current output of integrated (Re2 – Re1) input currents.
B0 ~ B3	:	Control bits for radial circuit.
$\overline{DODS}$	:	Drop out detector supression.
D1 ~ D4	:	Photodiode currents.
FE	:	Focus error signal.
FE lag	:	Focus error signal for LAG network.
HF	:	HF output for DEMOD.
HFD (PLLH)	:	HF detector output for DEMOD.
HFin	:	HF current input.
LM	:	Laser monitor diode input.
LO	:	Laser amplifier current output.
Re1	:	Radial error signal 1 (summation of amplified currents D3 and D4).
Re2	:	Radial error signal 2 (summation of amplified currents D1 and D2).

RE dig (IRQ0/XI)	:	Radial error digital.
RE lag	:	Radial error signal for LAG network.
Si/$\overline{RD}$	:	On/off control for laser supply and focus circuit.
$\overline{TL}$	:	Track loss signal.
$\overline{Div4}$	:	Radial error digital devided by four.
HF/RF	:	Data.
D0	:	Drop-out detection signal (Active High).
SRF	:	Sliced RF signal.
EFM	:	Modulation data.
PCK	:	PLL extract clock (4.2336MHz).
FPC	:	PLL frequency comparison signal.
STAT	:	Status command for CRC etc.
DMUTE	:	Data mute command.
MDATA	:	Mode control data.
MLD	:	Load command for mode control data (Active Low).

P40~44	:	Key return signal.
DGT0~15	:	Key scan signal and FL digit signal.
SEG0~8	:	FL segment signal.
MCLK	:	Data clock for MDATA.
$\overline{SUBQ}$	:	Sub-code Q data.
$\overline{CLDCK}$	:	Data frame clock (7.35KHz).
BLKCK	:	Sub-code Q data block clock (75 Hz).
$\overline{RST}$ (RSTB)	:	Reset command (Active Low).
$\overline{TRON}$	:	Tracking servo ON command (Active Low).
EC	:	Turntable motor drive signal.
PC	:	Turntable motor ON command (Active Low).
SMCK (OSC1/OSC2)	:	System clock (4.2336MHz).
OE	:	Read out enable.
WE	:	Write enable.

Note) •⟶ Audio signal.

LRCK (LRCLK)	:	L/R data discrimination clock (88.2KHz)
SRDATA	:	Serial data output (MSB first)
SCLK (SRCK)	:	Serial bit clock (2.82MHz)
MEMP (EMPH)	:	Deemphasis command (Active High)
P27/P61	:	Synchro rec control
IRQ1	:	Remote control signal
384fs (X1)	:	384fs (16.9344MHz) signal
DEMPH	:	De-emphasis ON signal
TX	:	Digital signal output
D0~7	:	16K RAM data
RAM0~10	:	16K RAM address signal
P25 (MUTE)	:	Muting control signal
P26 (OPEN/CLOSE)	:	Loading motor control signal

■ SCHEMATIC DIAGRAM

(Parts list on pages 32 ~ 34, 40, 41.)

(This schematic diagram may be modified at any time with development of new technology.)

Notes:

- S1 : Power switch in "on" position.
- S613 : Play (▶PLAY) switch.
- S614 : Skip (⏮) switch.
- S615 : Search (◀◀) switch.
- S616 : Program (PROGRAM) switch.
- S617 : Auto cue (A CUE) switch.
- S619 : Stop (■ STOP) switch.
- S620 : Skip (⏭) switch.
- S621 : Search (▶▶) switch.
- S623 : Tape side select (SIDE A/B) switch.
- S624 : Random (RANDOM) switch.
- S626 : Disc holder open/close (⏏ OPEN/CLOSE) switch.
- S627 : Pause (❚❚ PAUSE) switch.
- S628 : Repeat (REPEAT) switch.
- S629 : Clear (CLEAR) switch.
- S630 : Edit (EDIT) switch.
- S631 : Time mode select (TIME MODE) switch.
- S1001 : Tray (OPEN/CLOSE) switch.

- The voltage value and waveforms are the reference voltage of this unit measured by DC electronic voltmeter (high impedance) and oscilloscope on the basis of chassis.
  Accordingly, there may arise some error in voltage values and waveforms depending upon the internal impedance of the tester or the measuring unit.
  *The parenthesized are the values of voltage generated during playing (Test disc 1kHz, L+R, 0dB), others are voltage values in stop mode.
- Important safety notice:
  Components identified by ⚠ mark have special characteristics important for safety. When replacing any of these components, use only manufacturer's specified parts.
- —< >—/--< >--: Positive voltage lines and negative voltage lines.
  ▨▨▨ : Audio signal lines.

Caution!

IC and LSI are sensitive to static electricity.
Secondary trouble can be prevented by taking care during repair.

- Cover the parts boxes made of plastics with aluminum foil.
- Ground the soldering iron.
- Put a conductive mat on the work table.
- Do not touch the pins of IC or LSI with fingers directly.

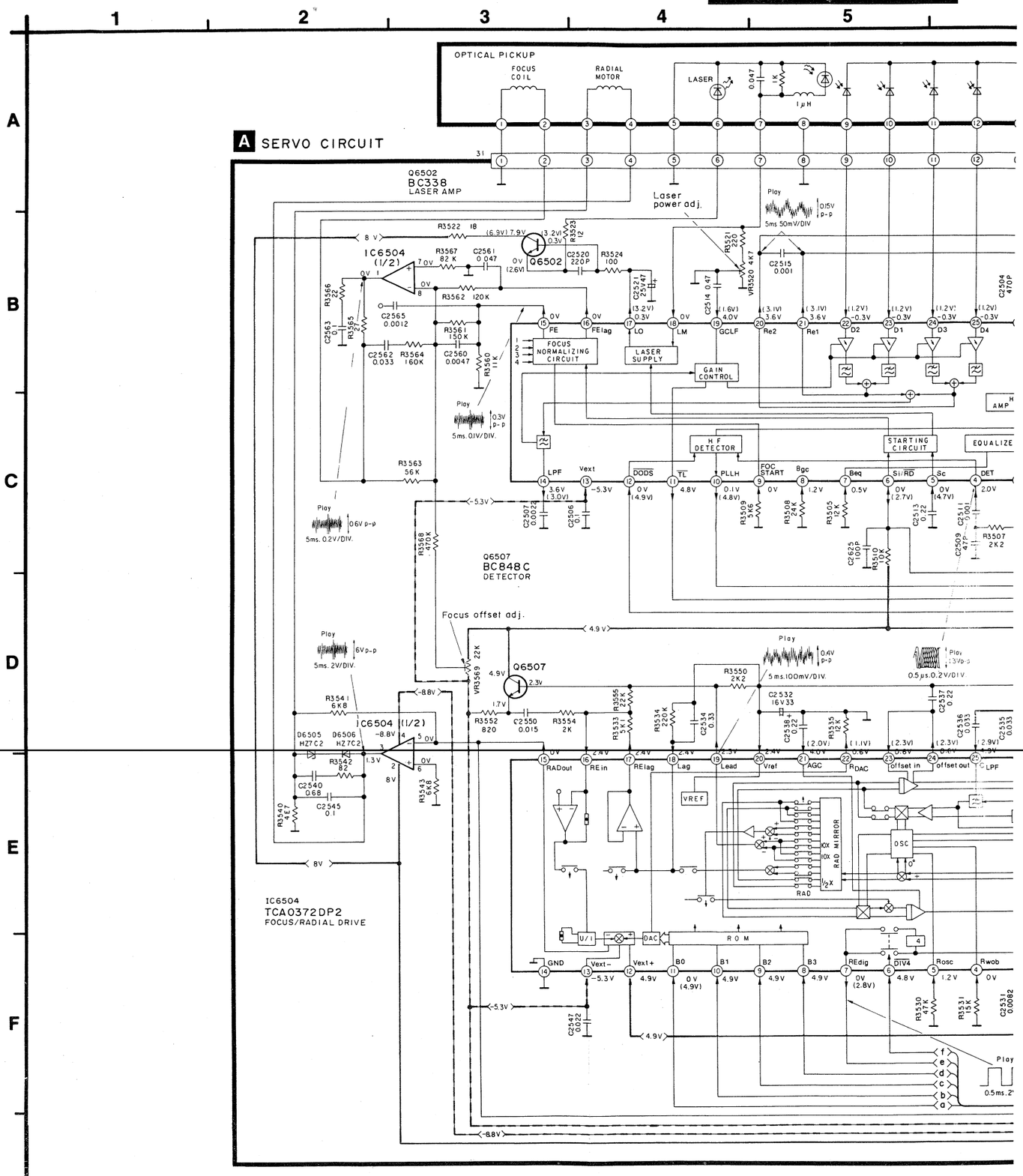

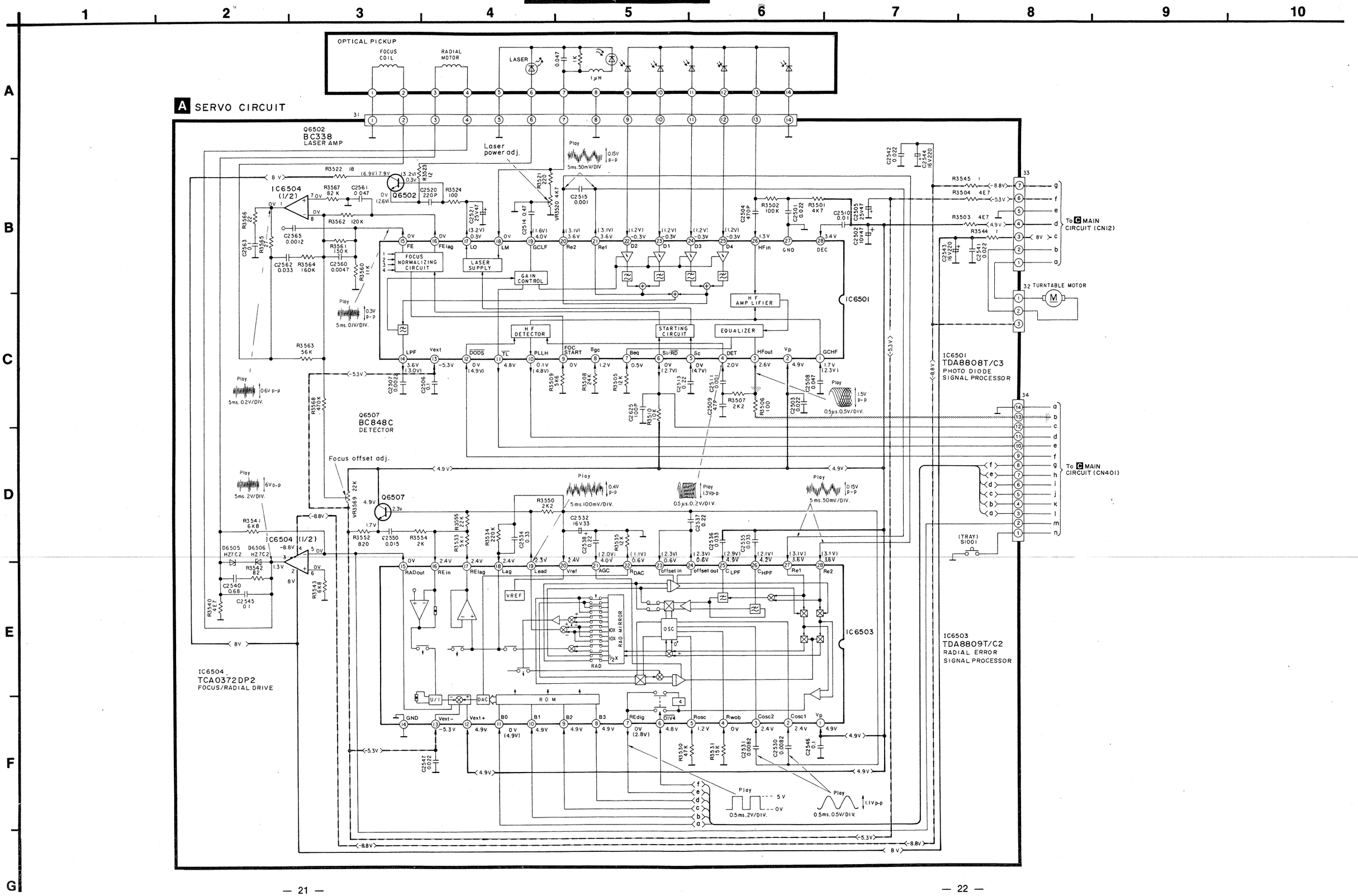
A SERVO CIRCUIT
OPTICAL PICKUP
FOCUS COIL
RADIAL MOTOR
LASER
Q6502
BC338
LASER AMP
Laser power adj.
IC6504 (1/2)
Q6502
FOCUS NORMALIZING CIRCUIT
LASER SUPPLY
GAIN CONTROL
H F AMP LIFIER
H F DETECTOR
STARTING CIRCUIT
EQUALIZER
IC6501
IC6501
TDA8808T/C3
PHOTO DIODE
SIGNAL PROCESSOR
Q6507
BC848C
DETECTOR
Focus offset adj.
Q6507
IC6504 (1/2)
IC6503
IC6503
TDA8809T/C2
RADIAL ERROR
SIGNAL PROCESSOR
IC6504
TCA0372DP2
FOCUS/RADIAL DRIVE
To C MAIN CIRCUIT (CN12)
TURNTABLE MOTOR
To C MAIN CIRCUIT (CN401)
(TRAY) S1001
VREF
RAD MIRROR
OSC
ROM
DAC
U/I

B OPERATION CIRCUIT

FL601 (RSL0045-F)

FL DISPLAY

R601 12

D610~612 ISS254TA

D601~606 ISS254TA

S617 (AUTO CUE)
S631 (TIME MODE)
S623 (TAPE SIDE A/B)
S630 (TAPE LENGTH)
S616 (PROGRAM)
S629 (CLEAR)
S615 (◀◀SEARCH)
S621 (▶▶ SEARCH)
S628 (REPEAT)
S614 (|◀◀SKIP)
S620 (▶▶|SKIP)
S627 (▮▮PAUSE)
S613 (▶PLAY)
S619 (■STOP)
S626 (▲OPEN /CLOSE)

CN611 CN612 CN613

C MAIN CIRCUIT

LOADING MOTOR

CN431 CN401

IC402(1/2)
IC402 TCA0372DM2 MOTOR DRIVE

To A SERVO CIRCUIT (34)

CN112

To A SERVO CIRCUIT (33)

Q251 DTAI43ZSTP SWITCHING (REMOTE)
Q252 DTC124ESTP SWITCHING (REMOTE)

JK251 REMOTE

JK201 CONTROL (To AMP)

Q201 DTC124ESTP SWITCHING(SYNCHRO EDIT)

CN411 CN412 CN413

IC401 MN187164PJW2 SYSTEM CONTROL & FL DRIVE

Q451 2SC3311QRSTA SWITCHING

IC501 AN8371S DATA SLICE & PLL

TJ301 TJ302 TJ303 TJ304 TJ305 TJ306 TJ307

Q351 DTAI24ESTP MOTOR CONTROL

Q401 DTAI24ESTP SWITCHING

Q51, 52 2SC3311QRSTA RESET

Q51 Q52

IC301

IC801

PLL adj.

20 21 22 23 24 25 26

IC11 LM2940T5M REGULATOR

IC12 BA4558FTI STABILIZER

IC302 UN6116M-2 16K RAM

IC301 MN6625 DIGITAL SIGNAL PROCESSOR

IC801 MN6474 DIGITAL FILTER & D/A CONV.

IC802 LM833M63 COMPARATOR

Q13 2SB1240QRTV6 REGULATOR

Q14 2SC3311QRSTA REGULATOR

Q15 2SA1309QRSTA REGULATOR

Q16 2SB1238QSTV6 REGULATOR

Q854 DTA124ESTP DE-EMPHASIS DRIVE

Q801,802 2SC3311QRSTA DE-EMPHASIS DRIVE

Q852 2SC3311QRSTA MUTING CONT.

Q803,804 2SD1450RSTTA MUTING

Q851,853 DTA114ESTP MUTING CONT.

D POWER SUPPLY CIRCUIT FOR [E,EG] AREAS.

E AC OUTLET JACK CIRCUIT

D POWER SUPPLY CIRCUIT FOR [EB] AREA.

E AC OUTLET JACK CIRCUIT

JK801 LINE OUT

L ch

R ch

— 25 —

■ TERMINAL GUIDE OF IC'S, TRANSISTORS AND DIODES

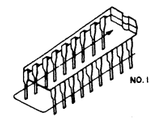

4822 209 72587 (TCA0372)	16 Pin
TCA0372DM2R	16 Pin

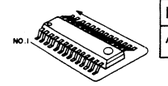

LM833M63	8 Pin	UM6116M-2	24 Pin
BA4558FT1		4822 209 73234 (TDA8808T)	28 Pin
AN8371S	24 Pin	4822 209 73235 (TDA8809T)	

LM2940T5M

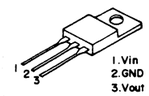

SRUN15T
SRUN38T

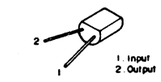

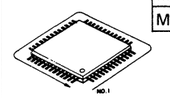

MN6474	42 Pin
MN6625	64 Pin
MN187164PJW3	64 Pin

4822 130 44121 (BC338)

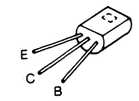

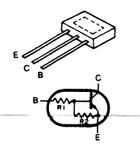

DTA124ESTP
DTA143ZSTP
DTA114ESTP

2SA1309QRSTA,
2SD1450RSTTA,
2SC3311QRSTA

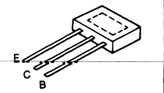

DTC124ESTP

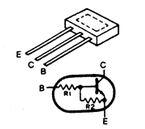

2SB1238QSTV6,
2SB1240QRTV6

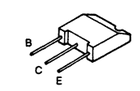

1SS254TA,
1SR139-200TA

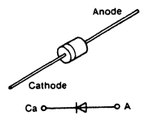

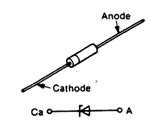

MA4330MTA,
MA4062HTA,
MA4039MTA
4822 130 81101
(HZ7C2)

5322 130 42136
(BC848C)

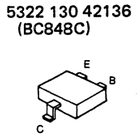

— 26 —

■ PRINTED CIRCUIT BOARDS

A SERVO P.C.B.

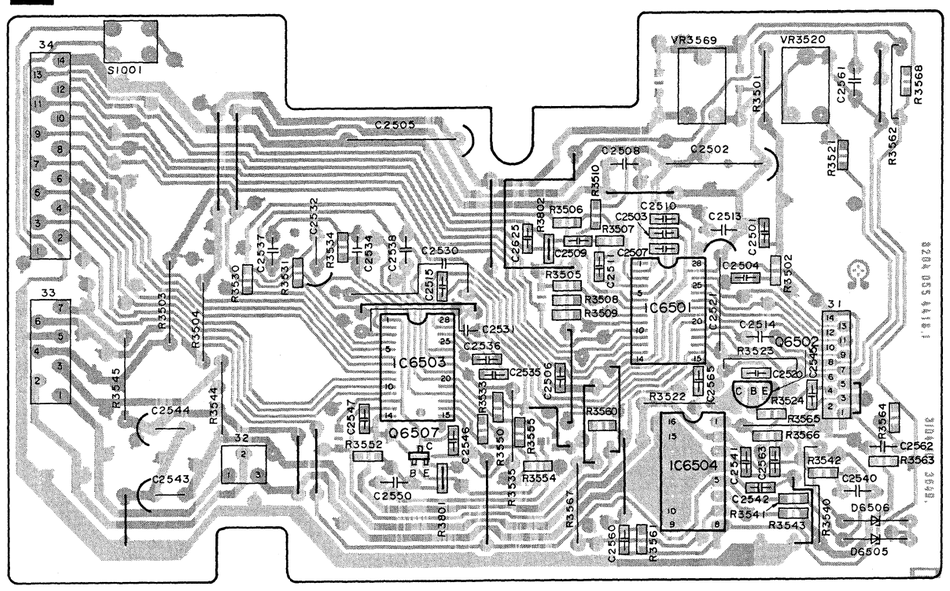

B OPERATION P.C.B.

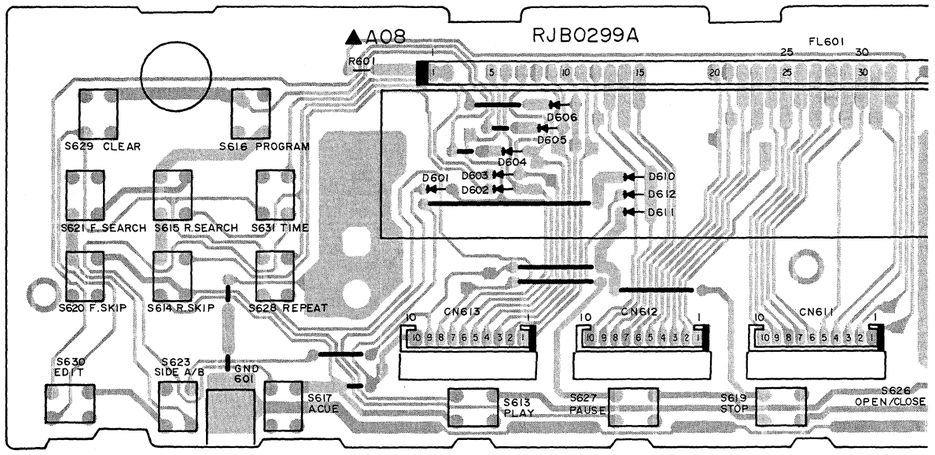

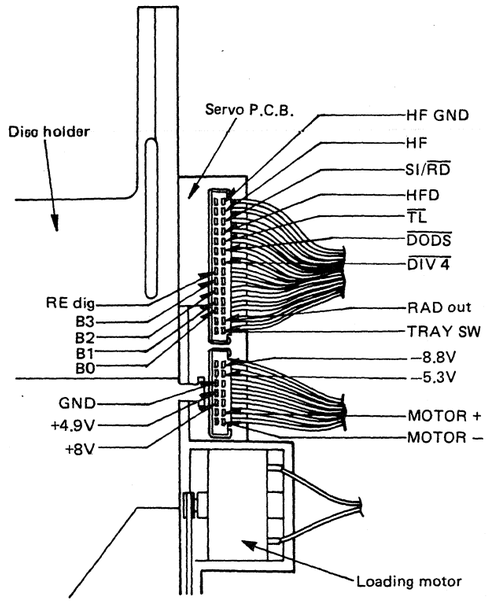

Note: Use connector pins to check servo circuit voltages and waveforms.

E AC OUTLET JACK P.C.B.

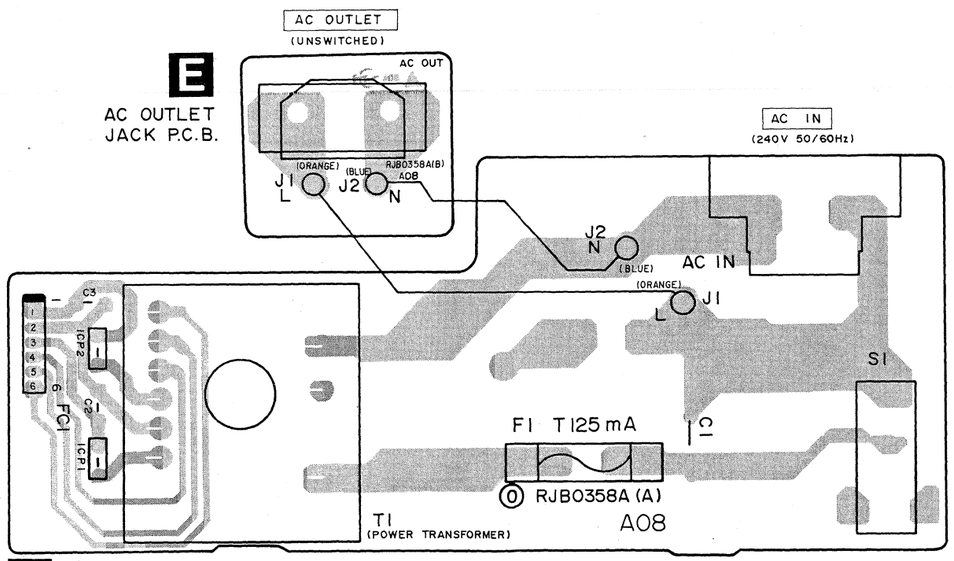

D POWER SUPPLY P.C.B. FOR(EB) AREA.

E AC OUTLET JACK P.C.B.

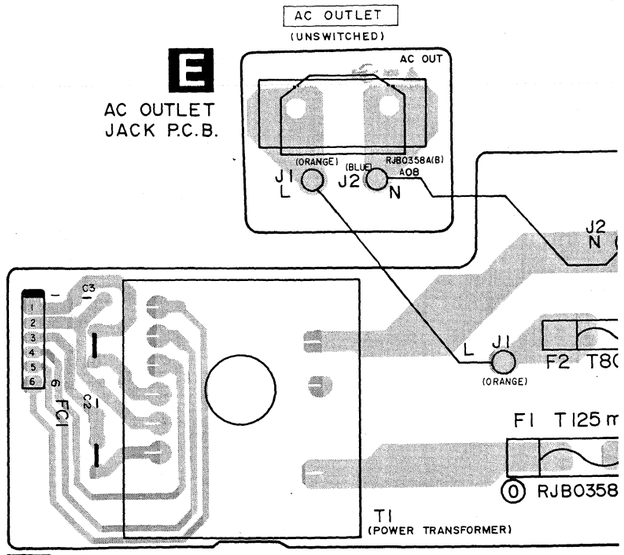

D POWER SUPPLY P.C.B. FOR(E,EG) AREAS.

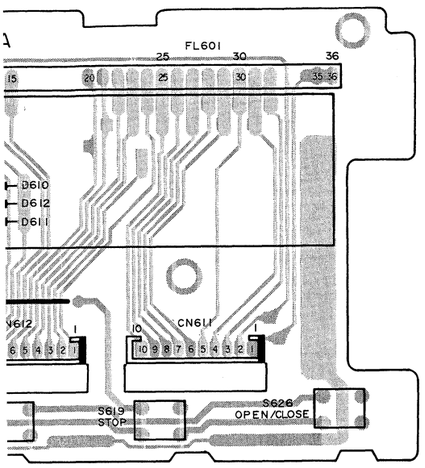
FL601
CN611
S619
STOP
S626
OPEN/CLOSE

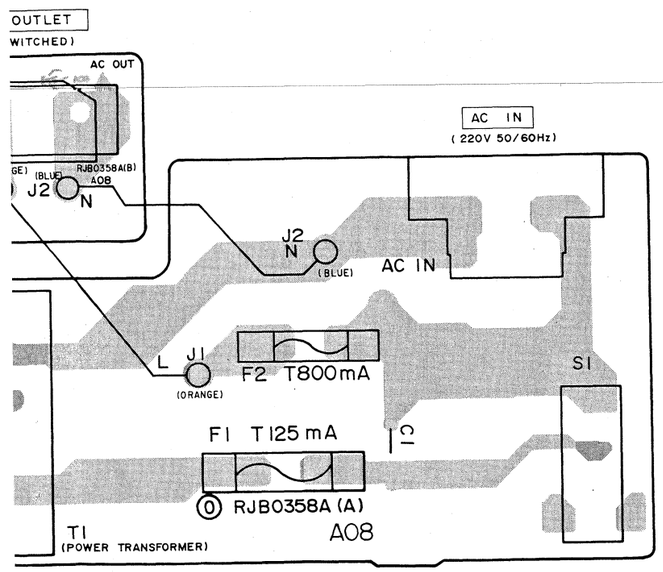
OUTLET
(WITCHED)
AC OUT
RJB0358A(B)
A08
J2
N
(BLUE)
AC IN
(220V 50/60Hz)
L
J1
(ORANGE)
F2 T800mA
S1
F1 T125 mA
T1
(POWER TRANSFORMER)
RJB0358A (A)
A08
{E,EG} AREAS.
POWER

C MAIN P.C.B.

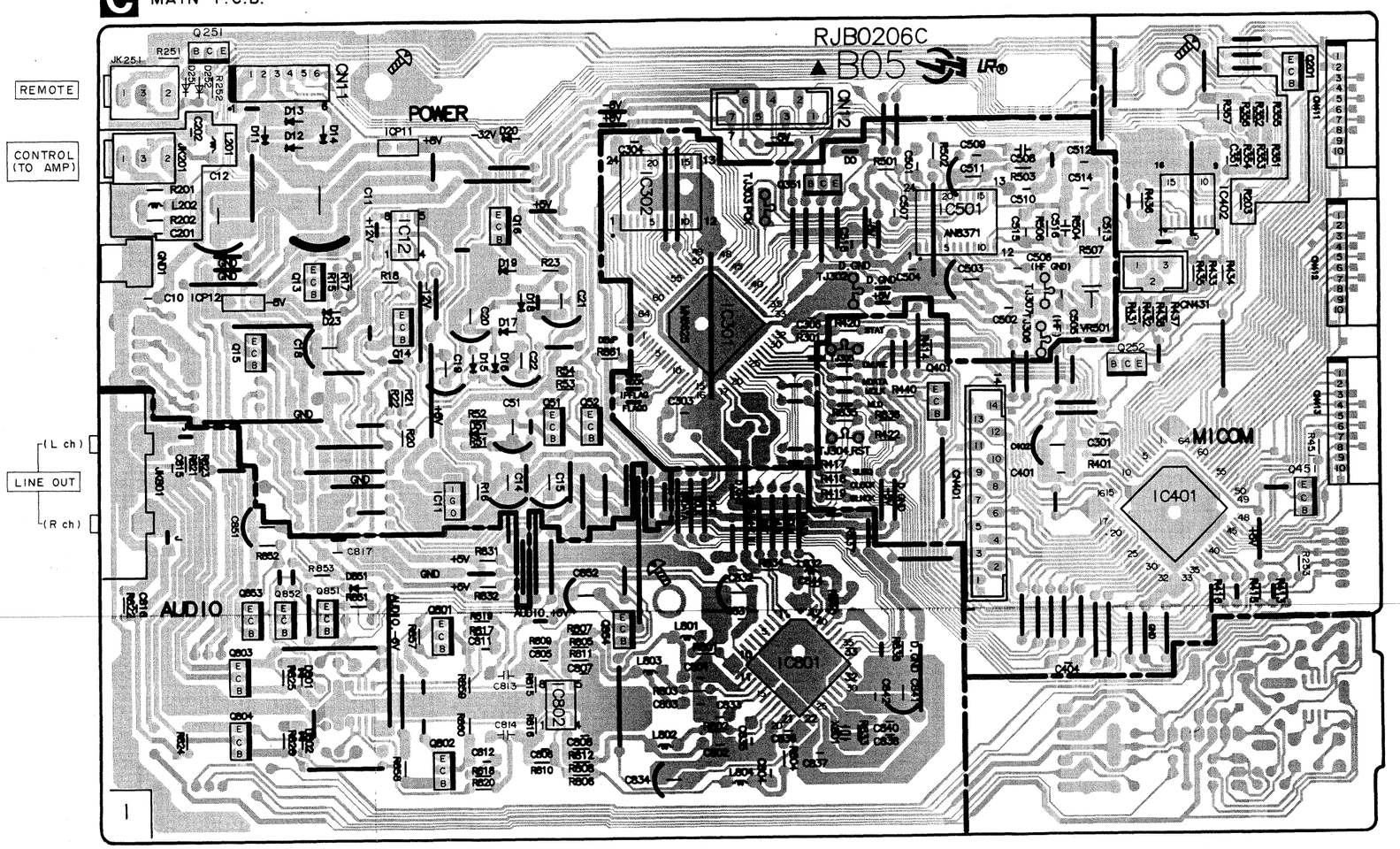
RJB0206C
B05
REMOTE
CONTROL (TO AMP)
(L ch)
LINE OUT
(R ch)
POWER
AUDIO
MICOM
IC401
IC801
IC802
IC501
IC301
IC302
IC12
IC11
CN111
CN112
CN431
CN401
CN801
JK251
JK201
JK801
Q251
Q252
Q401
Q451
Q801
Q802
Q803
Q804
Q851
Q852
Q853
Q501
Q502
Q503
Q504
Q505
Q506
Q507
Q508
Q509
Q510
Q511
Q512
Q513
Q514
Q515
Q516
Q517
Q518
Q519
Q520
Q521
Q522
Q523
Q524
Q525
Q526
Q527
Q528
Q529
Q530
Q531
Q532
Q533
Q534
Q535
Q536
Q537
Q538
Q539
Q540

■ WIRING CONNECTION DIAGRAM

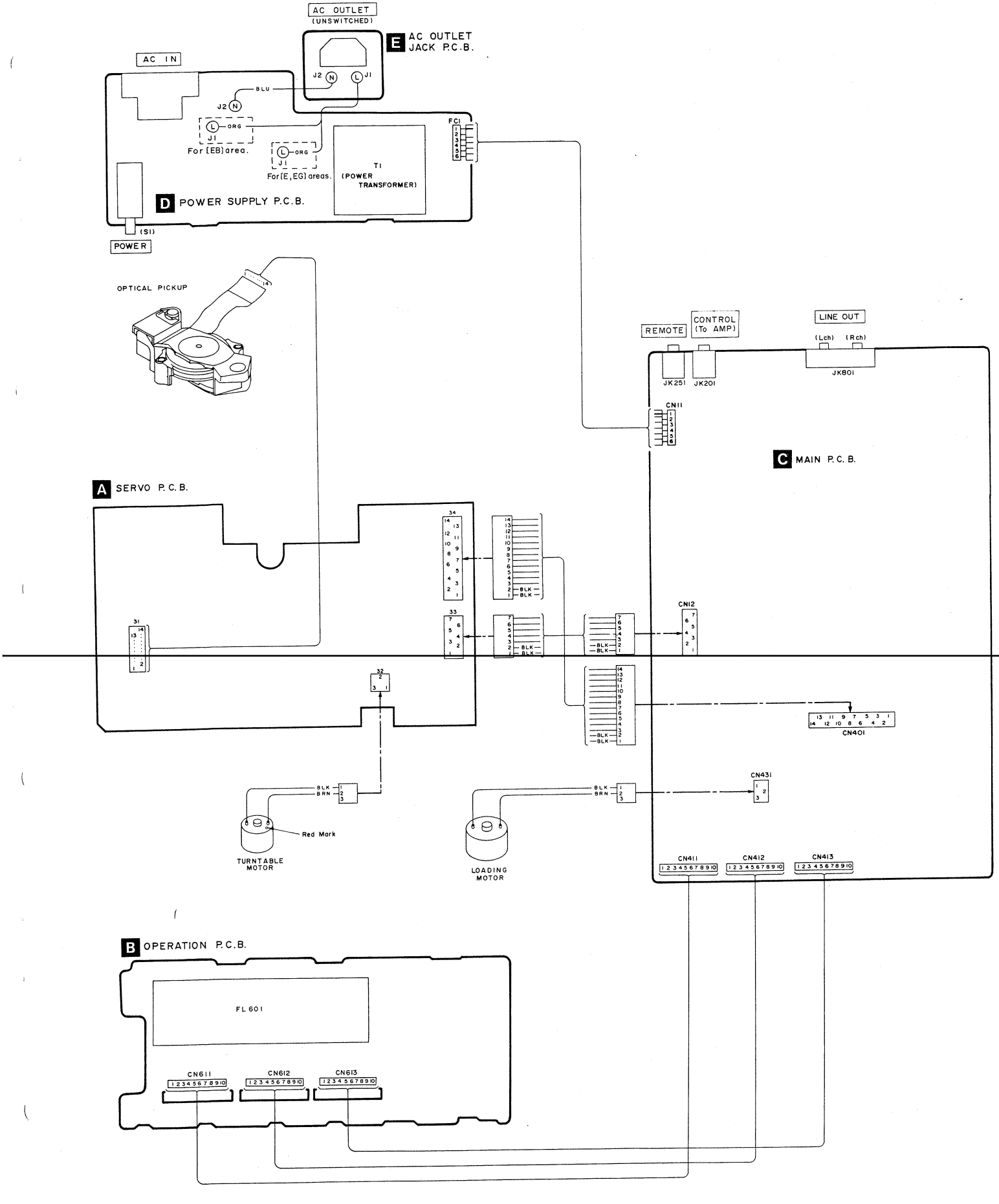

■ REPLACEMENT PARTS LIST

Notes : * Important safety notice:
Components identified by ⚠ mark have special characteristics important for safety. When replacing any of these components use only manufacturer's specified parts.
* The parenthesized indications in the Remarks columns specify the areas. (Refer to the cover page for area.)
Parts without these indications can be used for all areas.
* Remote Control Ass'y: Supply period for three years from termination of production.
* [MB] Indicates in Remarks columns parts that are supplied by MBV.
* Warning : This product uses a laser diode. Refer to caution statements on page 3.
* ACHTUNG : Die lasereinheit nicht zerlegen.
Die lasereinheit darf nur gegen eine vom hersteller spezifizierte einheit ausgetauscht werden.

Ref. No.	Part No.	Part Name & Description	Remarks
		INTEGRATED CIRCUIT(S)	
IC11	LM2940T5M	IC, REGULATOR	
IC12	BA4558FT1	IC, STABILIZER	
IC301	MN6625	IC, DIGITAL S.P.	
IC302	UM6116M-2	IC, 16K RAM	
IC401	MN187164PJW2	IC, SYSTEM CONTROL&FL DRIVE	
IC402	TCA0372DM2	IC, MOTOR DRIVE	
IC501	AN8371S	IC, DATA SLICE&PLL	
IC801	MN6474	IC, DIGITAL FILTER&D/A CONV.	
IC802	LM833M63	IC, DIFFERENTIAL AMP	
		TRANSISTOR(S)	
Q13	2SB1240QRTV6	TRANSISTOR	
Q14	2SC3311QRSTA	TRANSISTOR	
Q15	2SA1309QRSTA	TRANSISTOR	
Q16	2SB1238QSTV6	TRANSISTOR	
Q51, 52	2SC3311QRSTA	TRANSISTOR	
Q201	DTC124ESTP	TRANSISTOR	
Q251	DTA143ZSTP	TRANSISTOR	
Q252	DTC124ESTP	TRANSISTOR	
Q351	DTA124EST	TRANSISTOR	
Q401	DTA124EST	TRANSISTOR	
Q451	2SC3311QRSTA	TRANSISTOR	
Q801, 802	2SC3311QRSTA	TRANSISTOR	
Q803, 804	2SD1450RSTTA	TRANSISTOR	
Q851	DTA114ESTP	TRANSISTOR	
Q852	2SC3311QRSTA	TRANSISTOR	
Q853	DTA114ESTP	TRANSISTOR	
Q854	DTA124EST	TRANSISTOR	
		DIODE(S)	
D11-18	1SR139-200TA	DIODE	⚠
D19	MA4330MTA	DIODE	
D20	MA4062HTA	DIODE	
D23	1SR139-200TA	DIODE	
D51	MA4039MTA	DIODE	
D251, 252	1SS254TA	DIODE	
D601-606	1SS254TA	DIODE	
D610-612	1SS254TA	DIODE	
D801, 802	1SS254TA	DIODE	
D851	1SR139-200TA	DIODE	

Ref. No.	Part No.	Part Name & Description	Remarks
		I.C, PROTECTOR	
ICP1, 2	SRUN38T	IC, PROTECTOR	(EB) ⚠
ICP11, 12	SRUN15T	IC, PROTECTOR	
		VARIABLE RESISTOR(S)	
VR501	EVNDXAA00B13	V.R, PLL ADJ.	
		COIL(S)	
L201, 202	ELEV3R3KA	COIL	
L801-804	ELEV561KA	COIL	
L832	ELEPK4R7KA	COIL	
		TRANSFORMER(S)	
T1	ETP48JJG61CN	POWER TRANSFORMER	(E, EG) ⚠ [MB]
T1	ETP48JJG71BN	POWER TRANSFORMER	(EB) ⚠ [MB]
		OSCILLATOR(S)	
X801	SVQ49U338S	OSCILLATOR	
		DISPLAY TUBE	
FL601	RSL0045-F	DISPLAY TUBE	
		FUSE	
F1	XBA2C012TB0	FUSE	⚠
F2	XBA2C08TB0	FUSE	(E, EG) ⚠
		SWITCH(ES)	
S1	ESB8249V	SW, POWER	⚠
S613	EVQQB005R	SW, PLAY	
S614	EVQQB005R	SW, SKIP(R)	
S615	EVQQB005R	SW, SEARCH(R)	
S616	EVQQB005R	SW, PROGRAM	
S617	EVQQB005R	SW, AUTO CUE	
S619	EVQQB005R	SW, STOP	
S620	EVQQB005R	SW, SKIP(F)	
S621	EVQQB005R	SW, SEARCH(F)	
S623	EVQQB005R	SW, SIDE A/B	

Ref. No.	Part No.	Part Name & Description	Remarks
S626	EVQQB005R	SW, OPEN/CLOSE	
S627	EVQQB005R	SW, PAUSE	
S628	EVQQB005R	SW, REPEAT	
S629	EVQQB005R	SW, CLEAR	
S630	EVQQB005R	SW, EDIT	
S631	EVQQB005R	SW, TIME	
		CONNECTOR(S) AND SOCKET(S)	
CN11	SJT30643-V	CONNECTOR(6P)	
CN12	RJT001H007	CONNECTOR(7P)	MB
CN401	RJT001H014	CONNECTOR(14P)	MB
CN411-413	RJU003K010M1	SOCKET(10P)	
CN431	RJT001H003	CONNECTOR(3P)	MB
CN611-613	RJT003K010M	SOCKET(10P)	
		FLAT CABLE	
FC1	RWJ1806100KQ	FLAT CABLE(6P)	
		EARTH CONTACT	
GND1	SUSD144	EARTH CONTACT	
		JACK(S)	
JK2	SJS9333B	JACK, AC OUTLET	(E, EG)
~~JK2~~	~~SJS9332B~~	JACK, AC OUTLET	(EB)
JK201	RJJ33T01	JACK, CONTROL	
JK251	RJJ33TR01	JACK, REMOTE CONTROL	
JK801	RJH3201N	JACK, LINE OUT	
		<SERVO P. C. B.>	
		INTEGRATED CIRCUITS	
IC6501	482220973234	I. C, PHOTO DIODE S. P.	MB
IC6503	482220973235	I. C, RADIAL ERROR S. P.	MB
IC6504	482220972587	I. C, FOCUS/RADIAL DRIVE	MB
		TRANSISTORS	
Q6502	482213044121	TRANSISTOR	MB
Q6507	532213042136	TRANSISTOR	MB
		DIODES	
D6505	482213081101	DIODE	MB
D6506	482213081101	DIODE	MB
		VARIABLE RESISTORS	
VR3520	482210110685	V. R, LASER POWER ADJ.	MB

Ref. No.	Part No.	Part Name & Description	Remarks
VR3569	482210020522	V. R, FOCUS OFFSET ADJ.	MB
		SWITCH	
S1001	482227612523	SW, TRAY	MB

Notes : * Important safety notice:
Components identified by ⚠ mark have special characteristics important for safety. When replacing any of these components use only manufacturer's specified parts.
* The parenthesized indications in the Remarks columns specify the areas. (Refer to the cover page for area.)
Parts without these indications can be used for all areas.
* Remote Control Ass'y:
Supply period for three years from termination of production.
* [MB] Indicates in Remarks columns parts that are supplied by MBV.

Ref. No.	Part No.	Part Name & Description	Remarks
		CABINET AND CHASSIS	
1	RKM0015-1K	TOP CASE	[MB]
2	SHRD187	CLAMP	
3	SJS9236	AC INLET	⚠
4	SJT390	FUSE HOLDER	⚠
5	REX0007	CONNECTOR ASS'Y (7P)	[MB]
6	REX0008	CONNECTOR ASS'Y (14P)	[MB]
7	RGK0223B	TRAY ORNAMENT	
8	RGR0007H-C	REAR PANEL	(E, EG) [MB]
8	RGR0007I-D	REAR PANEL	(EB) [MB]
9	SBC666-1	POWER KNOB	
10	RKA0042B	FOOT	[MB]
11	RMK0023-1	CHASSIS	[MB]
12	RMR0084	POWER SW ROD	[MB]
13	RMR0020	SPACER(A)	[MB]
14	RMR0021	SPACER(B)	[MB]
15	RMR0022	SPACER(C)	[MB]
16	SUSD144	EARTH CONTACT	
17	RMR0264	VFD HOLDER	
18	RFKGLPJ27AEK	FRONT PANEL ASS'Y	[MB]
18-1	RKW0079	WINDOW	[MB]
19	RGU0063	EDIT KNOB	
20	RGU0329	SKIP KNOB	
21	RGU0330	PROGRAM KNOB	
22	SHE185-2	P. C. B. SUPPORT	
23	SJS9333A	AC OUTLET COVER	(E, EG)
23	SJS9332A	AC OUTLET COVER	(EB)
24	RGU0057-1	MAIN KNOB	
		SCREWS	
N1	SNE2129-1	SCREW	
N2	XTBS3+8JFZ1	SCREW	
N3	XTB3+8JFZ	SCREW	
N4	XTB3+16JFZ	SCREW	
N5	XTB3+35JFZ	SCREW	
		PACKING MATERIAL	
P1	RPG0371	PACKING CASE	[MB]
P2	RPN0073A	CUSHION (F)	[MB]
P3	RPN0073B	CUSHION (B)	[MB]
P4	RMR0024	LOCK SHAFT	[MB]
P5	XZB60X60A01	PROTECTION BAG(UNIT)	
P6	XZB23X35C03	PROTECTION BAG(F. B.)	

Ref. No.	Part No.	Part Name & Description	Remarks
P7	XZB26X17C03	PROTECTION BAG(CORD)	
P8	RPH0026	PROTECTION SHEET	
		ACCESSORIES	
A1	RFKSLPJ27AEK	INSTRUCTION MANUAL ASS'Y	(E) [MB]
A1	RQT0307-B	INSTRUCTION MANUAL	(EB) [MB]
A1	RQT0308-D	INSTRUCTION MANUAL	(EG) [MB]
A2	RQA0013	WARRANTY CARD	
A3	RQCB0169	SERVICENTER LIST	
A4	SFDAC05E03	POWER CORD	(E, EG) ⚠
A4	SJA188	POWER CORD	(EB) ⚠
A5	SJP2249-3	OUTPUT CORD	
A6	SJP2257T	M3 CORD	
A7	RQCA0059	CAUTION (LOCK SHAFT)	[MB]
		LOADING UNIT PARTS	
101	482244450603	TRAY	[MB]
102	482232550176	GROMMET, CABLE	[MB]
103	482232550177	GROMMET, CABLE	[MB]
104	482246692251	PLATE	[MB]
106	482235810115	BELT, DRIVING	[MB]
107	482252232359	WHEEL, GEAR	[MB]
108	482253251518	RING, RUBBER	[MB]
109	482240261081	GUIDE	[MB]
111	482240261132	GUIDE	[MB]
112	482252890638	ROLLER	[MB]
113	482249251902	SPRING, COMPRES.	[MB]
114	482246661587	FOAM	[MB]
116	482240261107	LEVER	[MB]
117	482249263659	SPRING, BLADE	[MB]
118	482244460568	LID	[MB]
119	482249232883	SPRING, TENSION	[MB]
121	482252890639	ROLLER	[MB]
122	482246692257	PLATE	[MB]
123	482240261207	HOLDER	[MB]
124	482252040177	BALL	[MB]
126	482253080503	RING, PRESSURE	[MB]
127	482269130209	OPTICAL PICKUP UNIT	[MB]
128	482240261196	SUPPORT	[MB]
129	482249263746	SPRING, CLAMPING	[MB]
131	482236120998	MOTOR	[MB]
132	482240250244	BRACKET	[MB]
133	482249251935	SPRING, COMPRES.	[MB]
134	482246450715	CHASSIS	[MB]

■ EXPLODED VIEWS

• Cabinet and chassis parts

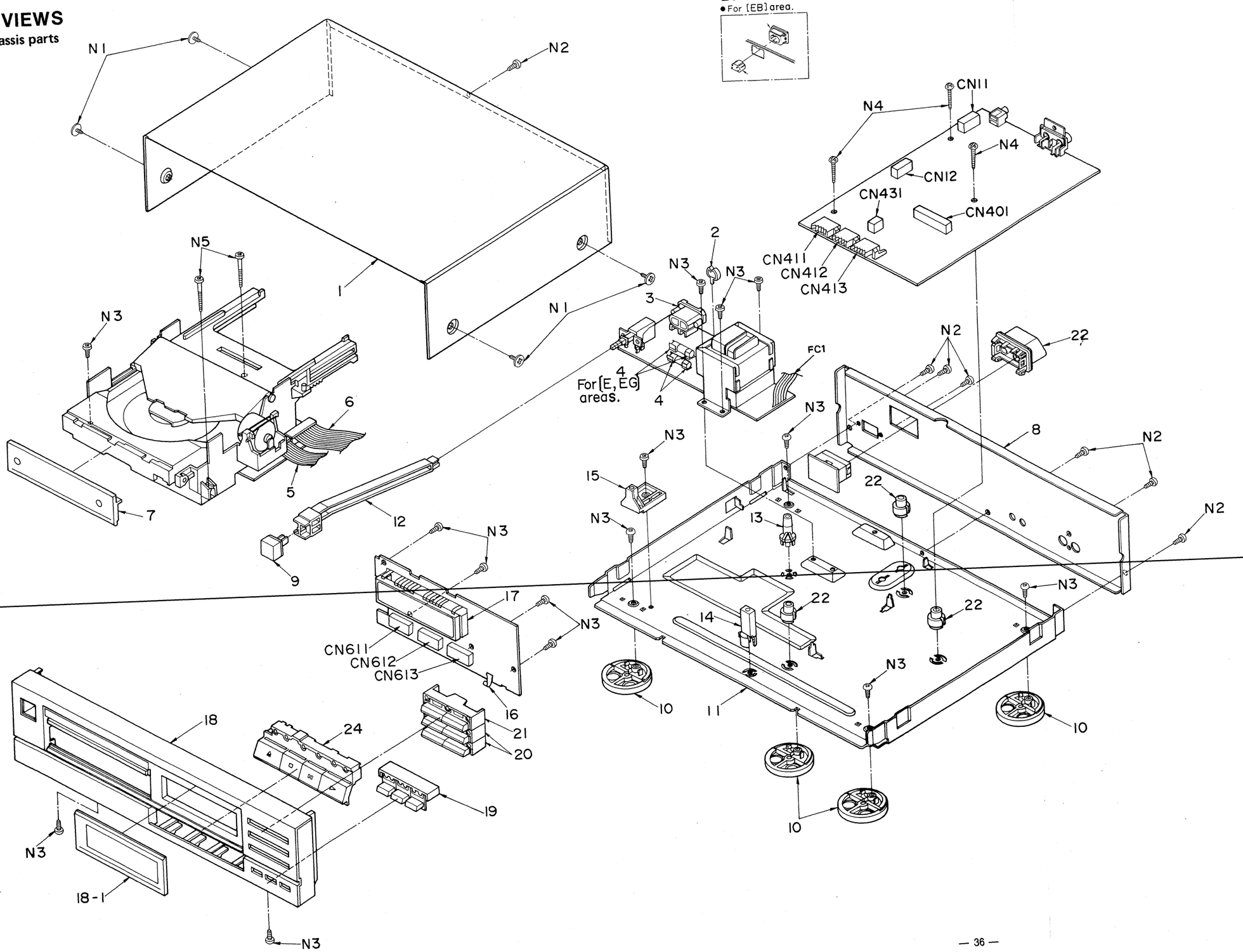

• Loadir

101 —

102 —

103 —

104 —

106 —

107 —

• Grou

1 Huma
Use th
from y

2 Work
Put a
area v
sheet

Caution
The stat
through
clothes

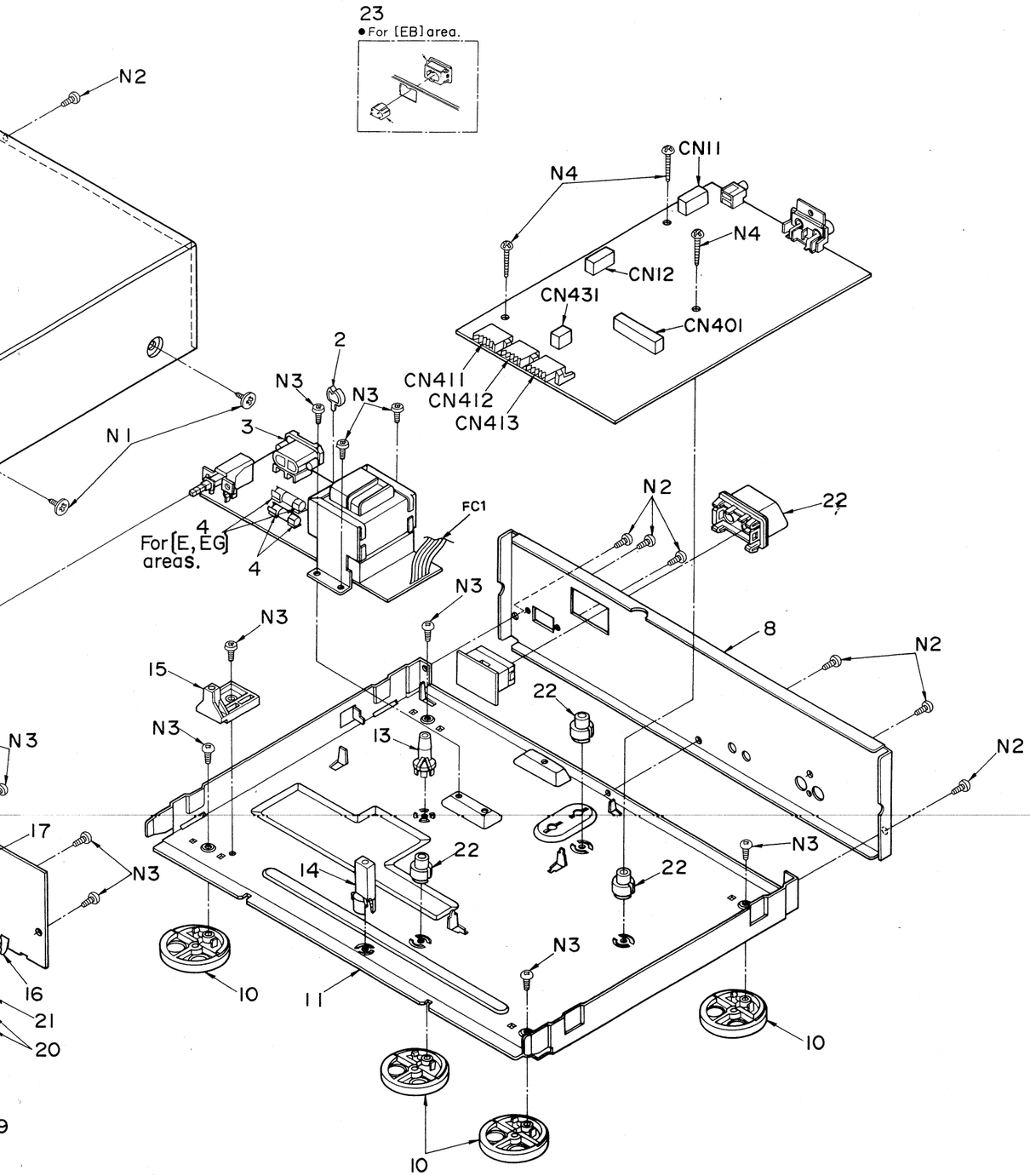

• **Loading unit part**

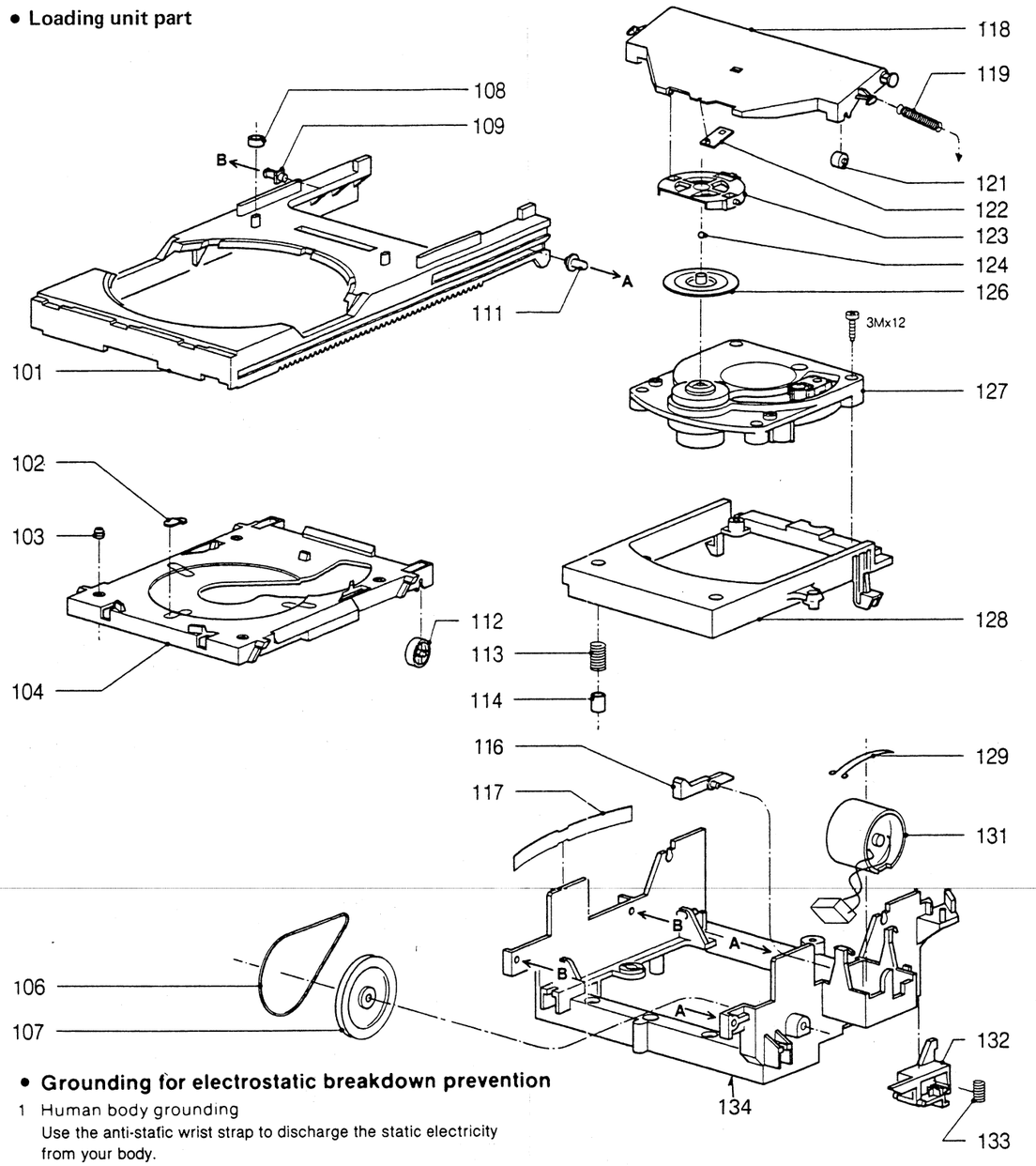

• **Grounding for electrostatic breakdown prevention**

1 Human body grounding
Use the anti-static wrist strap to discharge the static electricity from your body.

2 Work table grounding
Put a conductive material (sheet) or steel sheet on the area where the optical pickup is placed, and ground the sheet.

Caution:
The static electricity of your clothes will not be grounded through the wrist strap. So, take care not to let your clothes touch the optical pickup

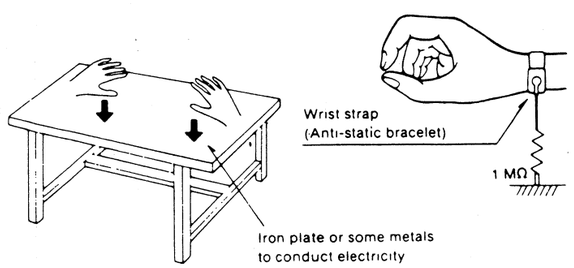

■ RESISTORS AND CAPACITORS

Notes : * Important safety notice:
Components identified by ⚠ mark have special characteristics important for safety. When replacing any of these components use only manufacturer's specified parts.
* MB Indicates in Remarks columns parts that are supplied by MBV.
* Capacity valuse are in microfarads (uF) unless specified otherwise, P=Pico-farads(pF) F=Farads(F)
* Resistance values are in ohms, unless specified otherwise, 1K=1,000(OHM) , 1M=1,000k(OHM)

Ref. No.	Part No.	Values & Remarks
		RESISTORS
R15	ERDS2TJ101T	1/4W 100
R16, 17	ERDS2TJ103T	1/4W 10K
R18	ERDS2TJ102T	1/4W 1K
R20	ERDS2TJ101T	1/4W 100
R21, 22	ERDS2TJ103T	1/4W 10K
R23	ERDS2TJ102T	1/4W 1K
R51	ERDS2TJ331T	1/4W 330
R52	ERDS2TJ272T	1/4W 2.7K
R53	ERDS2TJ472T	1/4W 4.7K
R54	ERDS2TJ102T	1/4W 1K
R201	ERDS2TJ100T	1/4W 10
R202	ERDS2TJ102T	1/4W 1K
R203	ERDS2TJ273T	1/4W 27K
R251	ERDS2TJ100T	1/4W 10
R252	ERDS2TJ332T	1/4W 3.3K
R253	ERDS2TJ472T	1/4W 4.7K
R301	ERDS2TJ182T	1/4W 1.8K
R351	ERDS2TJ103T	1/4W 10K
R352	ERDS2TJ104T	1/4W 100K
R353	ERDS2TJ123T	1/4W 12K
R354	ERDS2TJ104T	1/4W 100K
R355, 356	ERDS2TJ333T	1/4W 33K
R357	ERD25FVJ6R8T	1/4W 6.8 ⚠
R401	ERDS2TJ104T	1/4W 100K
R413, 414	ERDS2TJ472T	1/4W 4.7K
R415	ERDS2TJ103T	1/4W 10K
R416-420	ERDS2TJ472T	1/4W 4.7K
R422	ERDS2TJ472T	1/4W 4.7K
R431, 432	ERDS2TJ472T	1/4W 4.7K
R433	ERDS2TJ104T	1/4W 100K
R434	ERDS2TJ224T	1/4W 220K
R435	ERDS2TJ104T	1/4W 100K
R436	ERDS2TJ224T	1/4W 220K
R437, 438	ERDS2TJ472T	1/4W 4.7K
R440	ERDS2TJ472T	1/4W 4.7K
R451	ERDS2TJ104T	1/4W 100K
R501	ERDS2TJ224T	1/4W 220K
R502	ERDS2TJ562T	1/4W 5.6K
R503	ERDS2TJ474T	1/4W 470K
R504	ERDS2TJ101T	1/4W 100
R506	ERDS2TJ333T	1/4W 33K
R507	ERDS2TJ102T	1/4W 1K
R601	ERDS2TJ120T	1/4W 12
R801-804	ERDS2TJ150	1/4W 15
R805-808	ERDS2TJ433T	1/4W 43K
R809-812	ERDS2TJ563T	1/4W 56K

Ref. No.	Part No.	Values & Remarks
R815, 816	ERDS2TJ472T	1/4W 4.7K
R817, 818	ERDS2TJ151T	1/4W 150
R819, 820	ERDS2TJ471T	1/4W 470
R821, 822	ERDS2TJ473T	1/4W 47K
R823, 824	ERDS2TJ331T	1/4W 330
R825, 826	ERDS2TJ102T	1/4W 1K
R831, 832	ERDS2TJ221T	1/4W 220
R833	ERDS2TJ472T	1/4W 4.7K
R834	ERDS2TJ561T	1/4W 560
R835, 836	ERDS2TJ472T	1/4W 4.7K
R837, 838	ERDS2TJ100T	1/4W 10
R840	ERDS2TJ101T	1/4W 100
R851	ERDS2TJ471T	1/4W 470
R852	ERDS2TJ472T	1/4W 4.7K
R853	ERDS2TJ681T	1/4W 680
R857, 858	ERDS2TJ222T	1/4W 2.2K
R859, 860	ERDS2TJ105T	1/4W 1M
R861	ERDS2TJ472T	1/4W 4.7K
		CAPACITORS
C1	ECKDKC103PF2	400V 0.01U ⚠
C2, 3	ECFR1H103KB	50V 0.01U ⚠
C10	ECFR1E104ZF5	25V 0.1U
C11, 12	ECEA1CU222E	16V 2200U
C14, 15	ECEA0JK470B	6.3V 47U
C18	ECEA1CK101	16V 100U
C19, 20	ECEA1CU331B	16V 330U
C21, 22	ECEA1VU101B	35V 100U
C51	ECEA0JK220B	6.3V 22U
C201, 202	ECBT1C103NS5	16V 0.01U
C301	ECBT1C103NS5	16V 0.01U
C303, 304	ECFR1E104ZF5	25V 0.1U
C306	ECBT1H270J5	50V 27P
C351	ECBT1H102KB5	50V 1000P
C401	ECFR1E104ZF5	25V 0.1U
C402	ECEA0JK470B	6.3V 47U
C404	ECFR1E104ZF5	25V 0.1U
C501	ECQM1H104KF3	50V 0.1U
C502	ECFR1E104ZF5	25V 0.1U
C503	ECEA1CK100B	16V 10U
C504, 505	ECFR1E104ZF5	25V 0.1U
C506	ECBT1H150JC5	50V 15P
C507	ECBT1H102KB5	50V 1000P
C508	ECEA1CKN100B	16V 10U
C509	ECBT1H470J5	50V 47P
C510	ECQM1H104KF3	50V 0.1U
C511	ECEA1HKAR47B	50V 0.47U
C512, 513	ECBT1H681KB5	50V 680P

Ref. No.	Part No.	Values & Remarks
C514	ECQV1H474JZ3	50V 0.47U
C515	ECQM1H153KF3	50V 0.015U
C516	ECEA1VKN2R2B	35V 2.2U
C518	ECBT1H561KB5	50V 560P
C801-804	ECQV1H683JZ3	50V 0.068U
C805-808	ECBT1H151KB5	50V 150P
C811, 812	ECQV1H683JZ3	50V 0.068U
C813, 814	ECEA1CKN220B	16V 22U
C815, 816	ECBT1H102KB5	50V 1000P
C817	ECFR1E104ZF5	25V 0.1U
C831	ECFR1E104ZF5	25V 0.1U
C832	ECEA0JU331B	6.3V 330U
C833	ECFR1E104ZF5	25V 0.1U
C834	ECEA0JU331B	6.3V 330U
C835-837	ECFR1E104ZF5	25V 0.1U
C838	ECBT1H5R6K5	50V 5.6P
C840	ECBT1H5R6K5	50V 5.6P
C841	ECEA0JK101B	6.3V 100U
C842	ECFR1E104ZF5	25V 0.1U
C844	ECBT1H270J5	50V 27P
C851	ECEA0JU471B	6.3V 470U
C852	ECEA1AK100B	10V 10U
		<SERVO P.C.B.>
		RESISTORS
R3501	482211652426	1/2 4K7 MB
R3502	482211190214	1/8 100K MB
R3503	482211130499	1/3 4E7 MB
R3504	482211130499	1/3 4E7 MB
R3505	482211190253	1/8 12K MB
R3506	532211190091	1/8 100 MB
R3507	482211190248	1/8 2K2 MB
R3508	482211190512	1/8 24K MB
R3509	482211190572	1/8 5K6 MB
R3510	482211190249	1/8 10K MB
R3521	482211190178	1/8 220 MB
R3522	482211130515	1/3 18 MB
R3523	482211130511	1/3 12 MB
R3524	532211190091	1/8 100 MB
R3530	482211190543	1/8 47K MB
R3531	482211190344	1/8 15K MB
R3533	532211190268	1/8 5K1 MB
R3534	482211190197	1/8 220K MB
R3535	482211653081	3/5 12K MB
R3540	482211652858	3/5 4E7 MB
R3541	482211190544	1/8 6K8 MB
R3542	482211190124	1/8 82 MB
R3543	482211190544	1/8 6K8 MB

Ref. No.	Part No.	Values & Remarks
R3544	482211130483	1/3 1 MB
R3545	482211130483	1/3 1 MB
R3550	482211190248	1/8 2K2 MB
R3551	482211690417	1/8 15K MB
R3552	482211190171	1/8 820 MB
R3554	482211690421	1/8 2K MB
R3555	482211190251	1/8 22K MB
R3560	482211191494	1/8 11K MB
R3561	482211690417	1/8 150K MB
R3562	482211652845	3/5 120K MB
R3563	482211190573	1/8 56K MB
R3564	482211191495	1/8 160K MB
R3565	482211652354	1/2 27 MB
R3566	482211190186	1/8 22 MB
R3567	482211652478	1/2 82K MB
R3568	482211190161	1/8 470K MB
R3801	482211190163	0E MB
R3802	482211190163	0E MB
		CAPACITORS
C2501	482212233147	50 0.022 MB
C2502	482212422027	10 47 MB
C2503	482212233147	50 0.022 MB
C2504	482212231727	63 470P MB
C2505	482212422027	25 47 MB
C2506	482212233104	63 100NF MB
C2507	482212231644	63 0.0022 MB
C2508	532212142491	100 0.047 MB
C2509	482212231772	50 47P MB
C2510	482212232442	50 0.01 MB
C2511	482212231746	50 0.001 MB
C2513	482212142245	63 0.22 MB
C2514	482212151252	100 0.47 MB
C2515	482212231746	50 0.001 MB
C2520	482212231965	63 220P MB
C2521	482212422027	2.5 47 MB
C2530	482212151321	63 0.0082 MB
C2531	482212151321	63 0.0082 MB
C2532	482212440272	16 33 MB
C2534	532212142661	63 0.33 MB
C2535	532212231848	63 0.033 MB
C2536	532212231848	63 0.033 MB
C2537	482212142245	63 0.22 MB
C2538	482212142245	63 0.22 MB
C2540	482212441583	50 0.68 MB
C2541	482212233147	50 0.022 MB
C2542	482212233147	50 0.022 MB
C2543	482212440196	16 220 MB
C2544	482212440196	16 220 MB
C2545	482212233104	63 0.1 MB
C2546	482212233104	63 0.1 MB

Ref. No.	Part No.	Values & Remarks
C2547	482212233147	50 0.022 MB
C2550	482212151049	63 0.015 MB
C2551	482212151225	63 18NF MB
C2560	482212231784	50 0.0047 MB
C2561	482212151252	100 0.047 MB
C2562	532212142661	63 0.033 MB
C2563	482212233104	63 100NF MB
C2565	482212232808	50 0.0012 MB
C2625	482212231765	50 100P MB

■ TROUBLE

Play Operati

Power

(with no disc

Disc loa

TOC reading

Ref. No.	Part No.	Values & Remarks
R3544	482211130483	1/3 1 MB
R3545	482211130483	1/3 1 MB
R3550	482211190248	1/8 2K2 MB
R3551	482211690417	1/8 15K MB
R3552	482211190171	1/8 820 MB
R3554	482211690421	1/8 2K MB
R3555	482211190251	1/8 22K MB
R3560	482211191494	1/8 11K MB
R3561	482211690417	1/8 150K MB
R3562	482211652845	3/5 120K MB
R3563	482211190573	1/8 56K MB
R3564	482211191495	1/8 160K MB
R3565	482211652354	1/2 27 MB
R3566	482211190186	1/8 22 MB
R3567	482211652478	1/2 82K MB
R3568	482211190161	1/8 470K MB
R3801	482211190163	0E MB
R3802	482211190163	0E MB
		CAPACITORS
C2501	482212233147	50 0.022 MB
C2502	482212422027	10 47 MB
C2503	482212233147	50 0.022 MB
C2504	482212231727	63 470P MB
C2505	482212422027	25 47 MB
C2506	482212233104	63 100NF MB
C2507	482212231644	63 0.0022 MB
C2508	532212142491	100 0.047 MB
C2509	482212231772	50 47P MB
C2510	482212232442	50 0.01 MB
C2511	482212231746	50 0.001 MB
C2513	482212142245	63 0.22 MB
C2514	482212151252	100 0.47 MB
C2515	482212231746	50 0.001 MB
C2520	482212231965	63 220P MB
C2521	482212422027	2.5 47 MB
C2530	482212151321	63 0.0082 MB
C2531	482212151321	63 0.0082 MB
C2532	482212440272	16 33 MB
C2534	532212142661	63 0.33 MB
C2535	532212231848	63 0.033 MB
C2536	532212231848	63 0.033 MB
C2537	482212142245	63 0.22 MB
C2538	482212142245	63 0.22 MB
C2540	482212441583	50 0.68 MB
C2541	482212233147	50 0.022 MB
C2542	482212233147	50 0.022 MB
C2543	482212440196	16 220 MB
C2544	482212440196	16 220 MB
C2545	482212233104	63 0.1 MB
C2546	482212233104	63 0.1 MB
C2547	482212233147	50 0.022 MB
C2550	482212151049	63 0.015 MB
C2551	482212151225	63 18NF MB
C2560	482212231784	50 0.0047 MB
C2561	482212151252	100 0.047 MB
C2562	532212142661	63 0.033 MB
C2563	482212233104	63 100NF MB
C2565	482212232808	50 0.0012 MB
C2625	482212231765	50 100P MB

■ TROUBLESHOOTING GUIDE

SL-PJ27A Operation Sequence Check Sheet

Play Operation Sequence

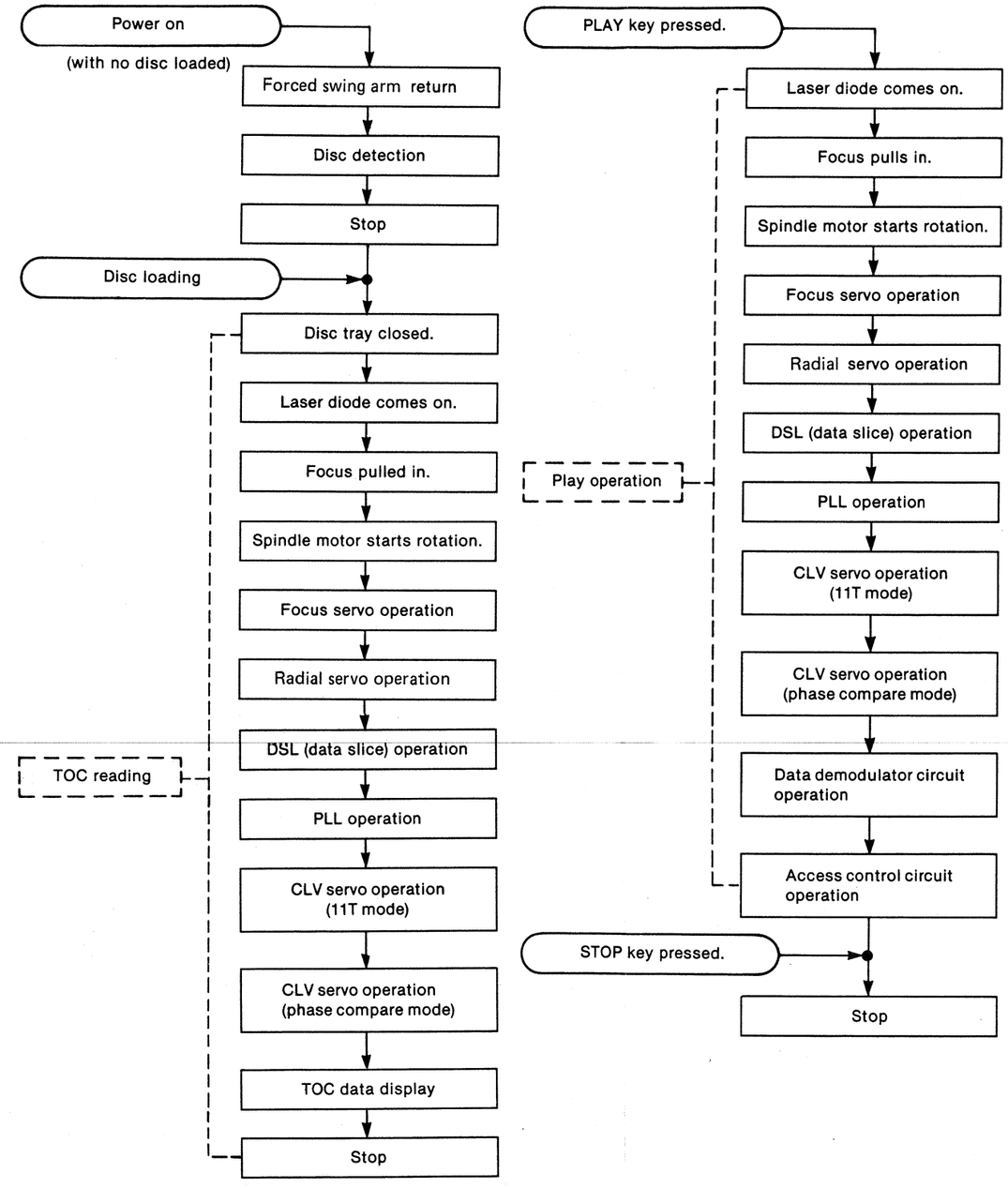

(Operation Sequence Just After Power On)

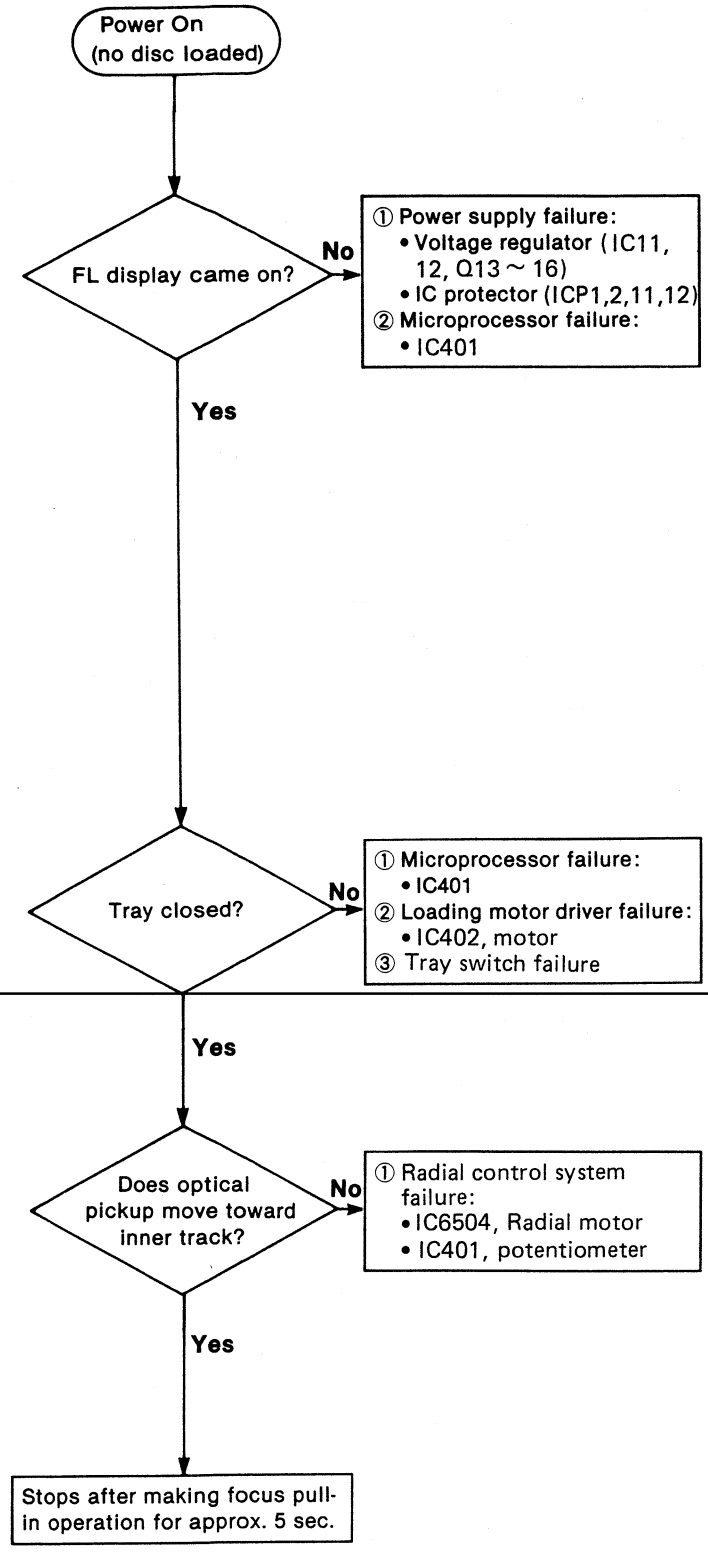

(TOC Read Operation-PLAY Operation)

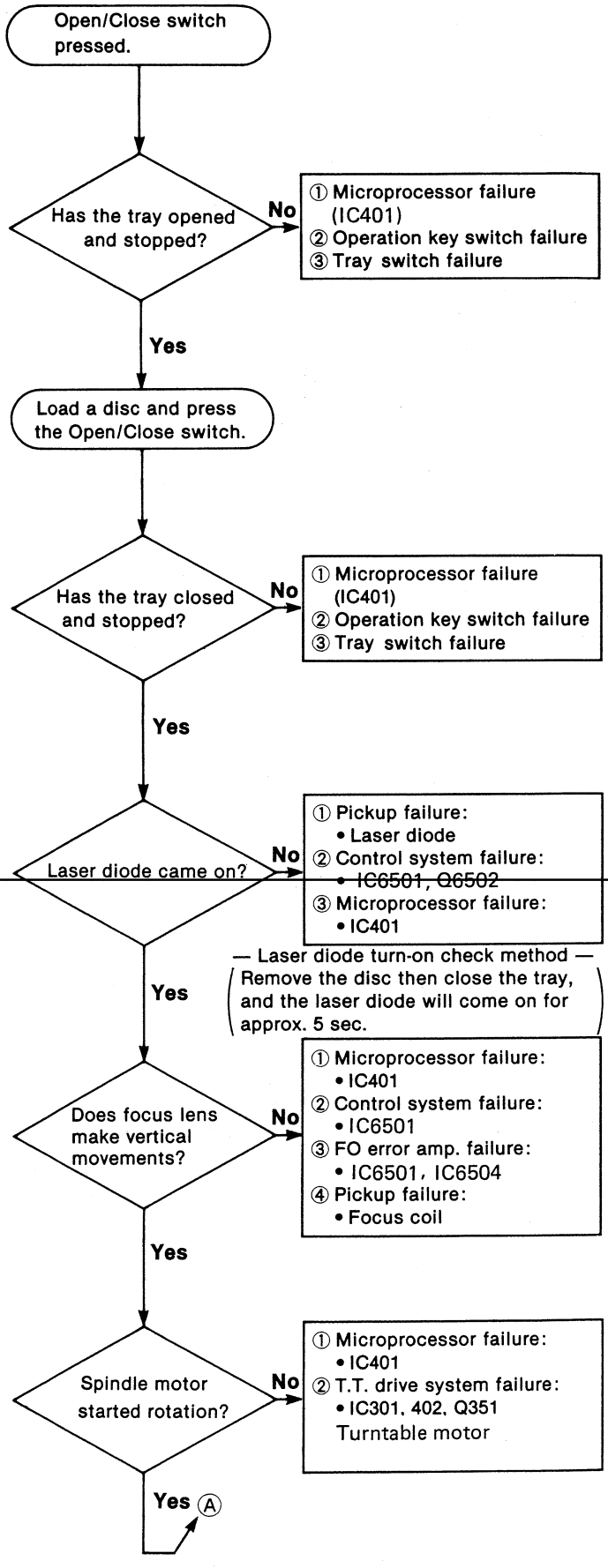

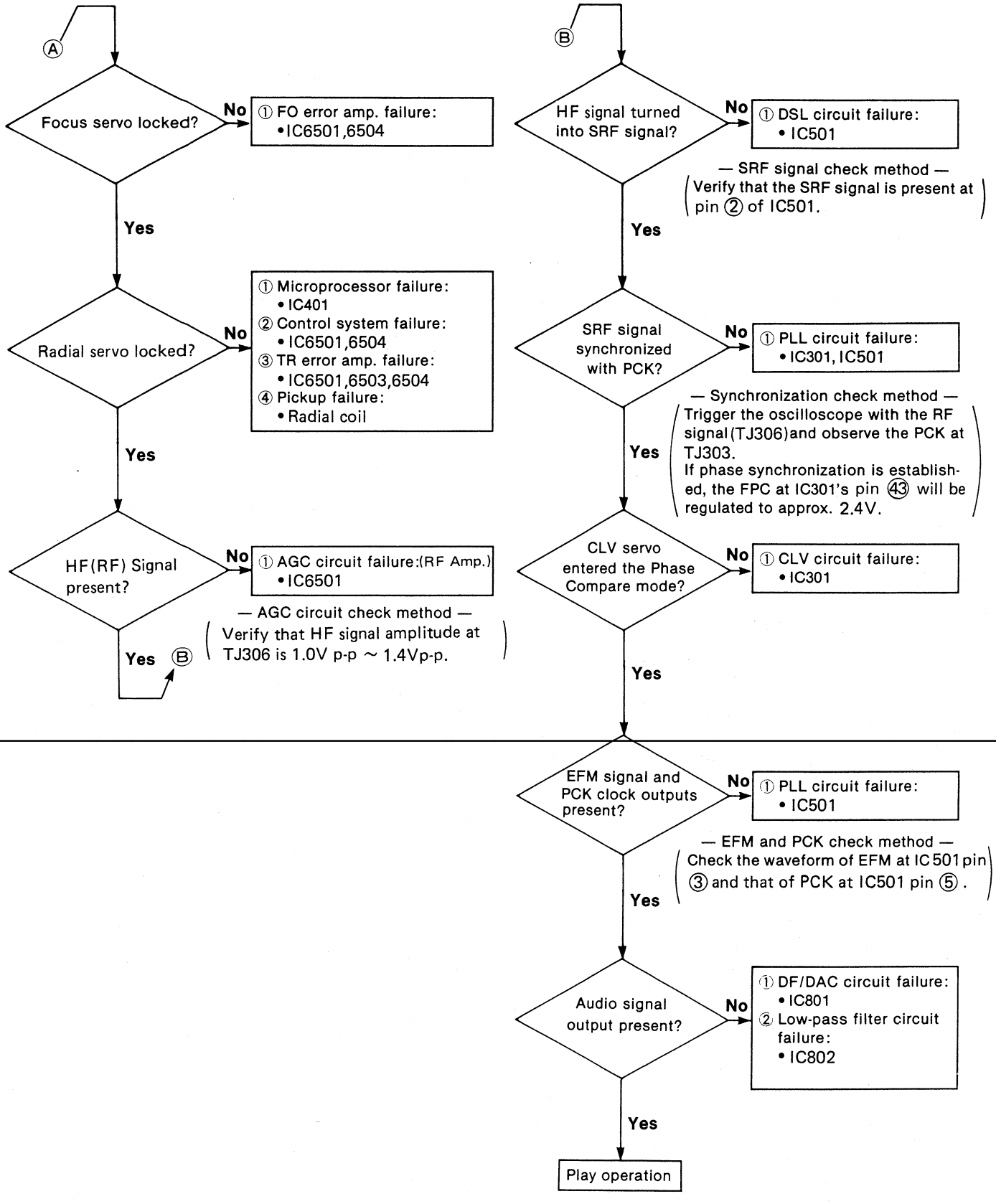
Ⓐ
Focus servo locked?
No
① FO error amp. failure:
•IC6501,6504
Yes
Radial servo locked?
No
① Microprocessor failure:
• IC401
② Control system failure:
• IC6501,6504
③ TR error amp. failure:
• IC6501,6503,6504
④ Pickup failure:
• Radial coil
Yes
HF(RF) Signal present?
No
① AGC circuit failure:(RF Amp.)
•IC6501
— AGC circuit check method —
Verify that HF signal amplitude at TJ306 is 1.0V p-p ~ 1.4Vp-p.
Yes Ⓑ
Ⓑ
HF signal turned into SRF signal?
No
① DSL circuit failure:
• IC501
— SRF signal check method —
Verify that the SRF signal is present at pin ② of IC501.
Yes
SRF signal synchronized with PCK?
No
① PLL circuit failure:
• IC301, IC501
— Synchronization check method —
Trigger the oscilloscope with the RF signal (TJ306) and observe the PCK at TJ303.
If phase synchronization is established, the FPC at IC301's pin ㊸ will be regulated to approx. 2.4V.
Yes
CLV servo entered the Phase Compare mode?
No
① CLV circuit failure:
• IC301
Yes
EFM signal and PCK clock outputs present?
No
① PLL circuit failure:
• IC501
— EFM and PCK check method —
Check the waveform of EFM at IC501 pin ③ and that of PCK at IC501 pin ⑤.
Yes
Audio signal output present?
No
① DF/DAC circuit failure:
• IC801
② Low-pass filter circuit failure:
• IC802
Yes
Play operation

■ PACKING

