ORDER NO. SD7601-1052

Service Manual

Speaker

SB-5000/SB-6000



SB-5000

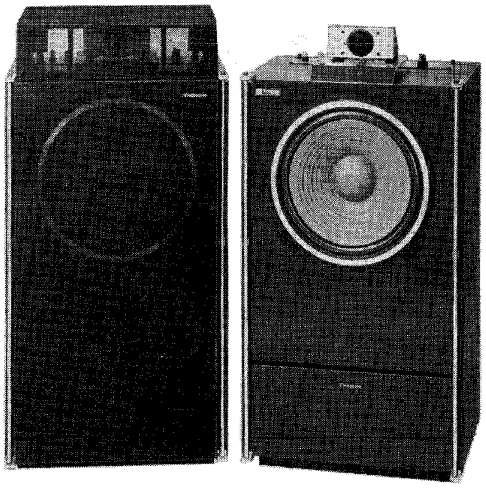

SB-6000

■ SPECIFICATIONS

SB-5000

Type:	2-way, 2-speaker bass-reflex system
Speakers:	Woofer: 25cm (10") cone type
	Tweeter: 6cm (2-3/8") cone type
Impedance:	8 ohms
Peak input power:	75 watts
Output sound pressure level:	93.5 dB/w (at 1.0m)
Crossover frequency:	2000 Hz
Dimensions:	35.0 (W) x 71.7 (H) x 32.3 (D) cm
	13-3/4" (W) x 28-1/4" (H) x 12-11/16" (D)
Weight:	16.0 kg (35.2 lbs)
Accessory:	Speaker cord 3 m ... 1

SB-6000

Type:	2-way, 2-speaker bass-reflex system
Speakers	Woofer: 30 cm (12") cone type
	Tweeter: 3.2 cm (1-1/4") dome type
Impedance:	6 ohms
Peak input power:	100 watts
Output sound pressure level:	93 dB/w (at 1.0m)
Crossover frequency:	1500 Hz
Dimensions:	42.5 (W) x 84.6 (H) x 34.0 (D) cm
	16-3/4" (W) x 33-5/16" (H) x 13-3/8" (D)
Weight:	28.0 kg (61.7 lbs)
Accessory:	Speaker cord 3m ... 1

Technics

Matsushita Electric Trading Co., Ltd.
P.O. Box 288, Central Osaka Japan

■ SCHEMATIC DIAGRAM

SB-5000

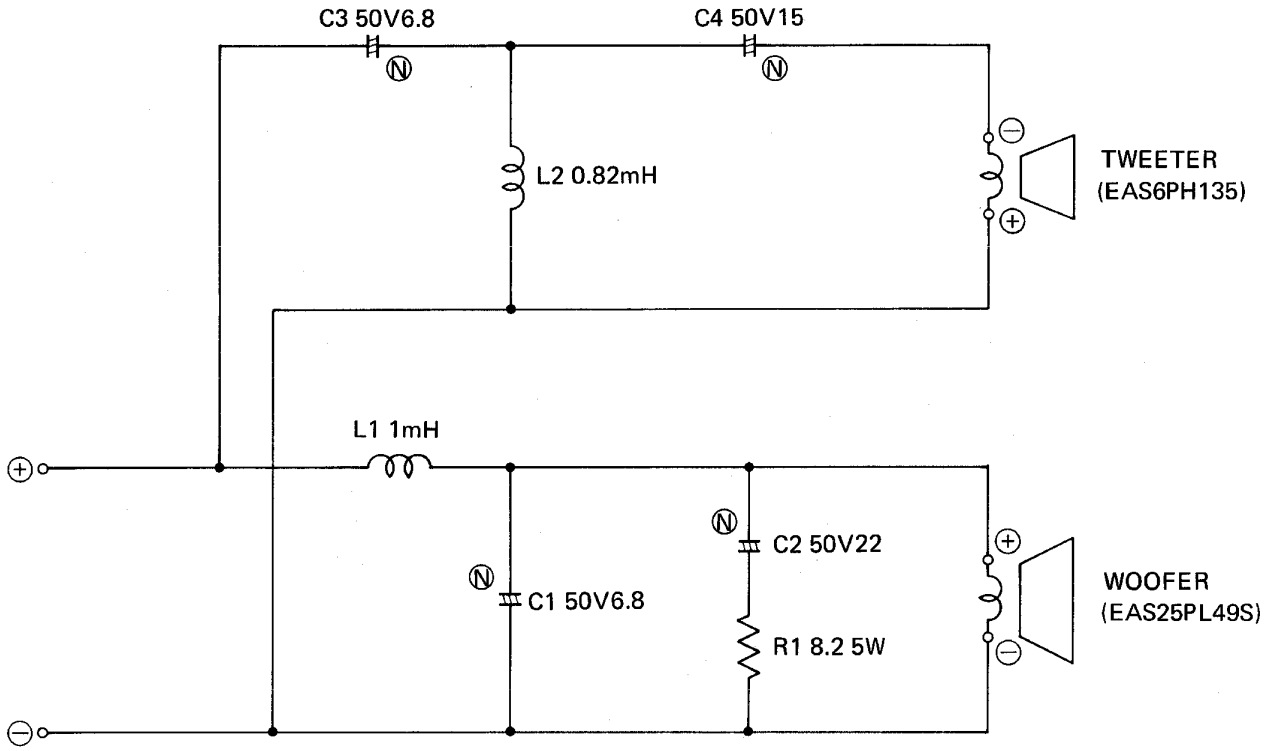

SB-6000

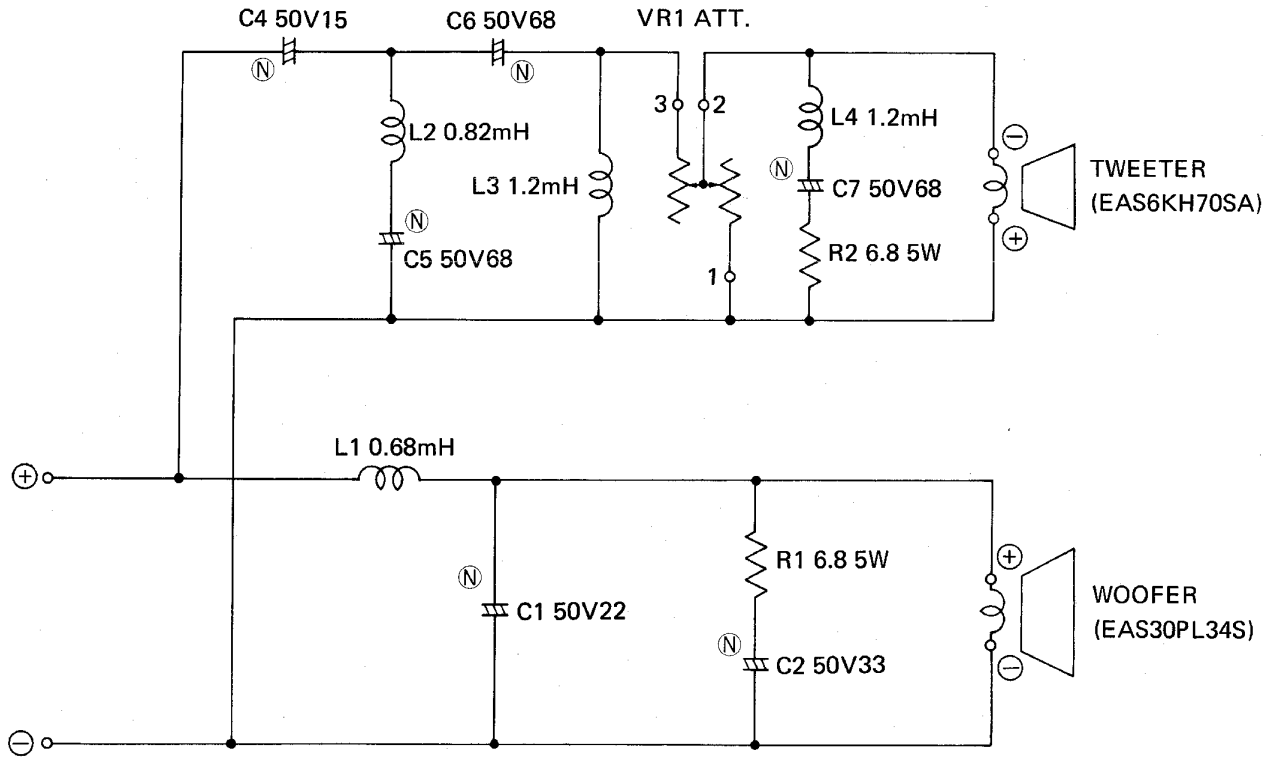

■ CIRCUIT BOARD

SB-5000

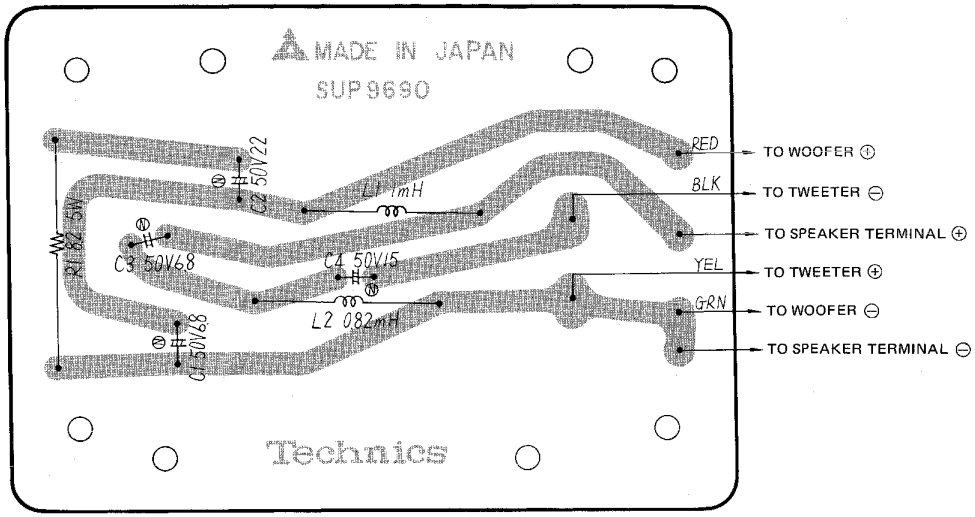

SB-6000

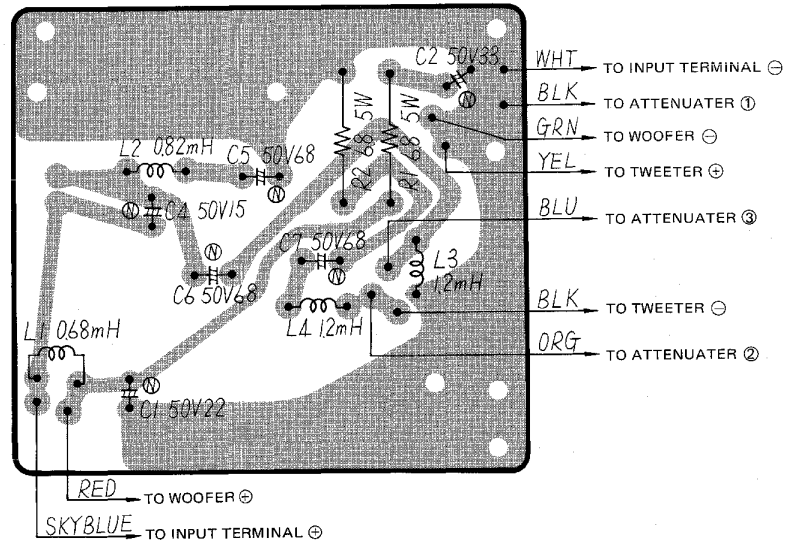

■ LOCATION OF PARTS

SB-5000

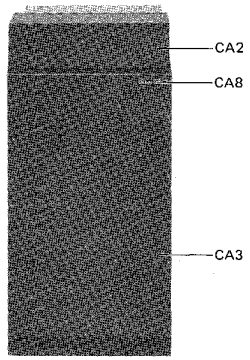

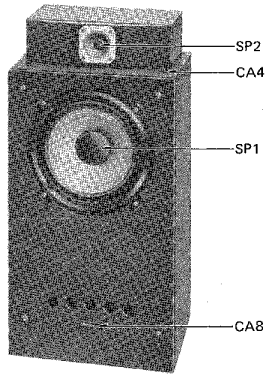

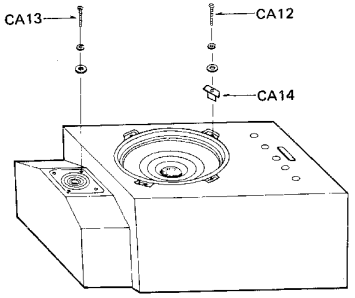

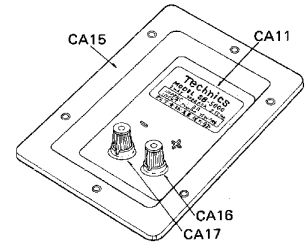

SB-6000

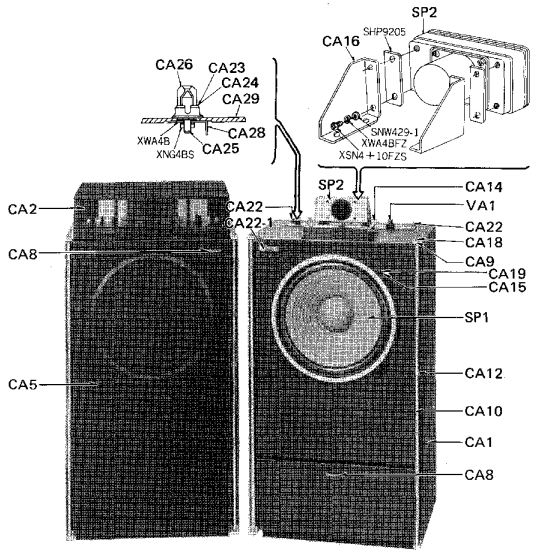

■ COMPONENT PACKING PROCEDURE

SB-5000

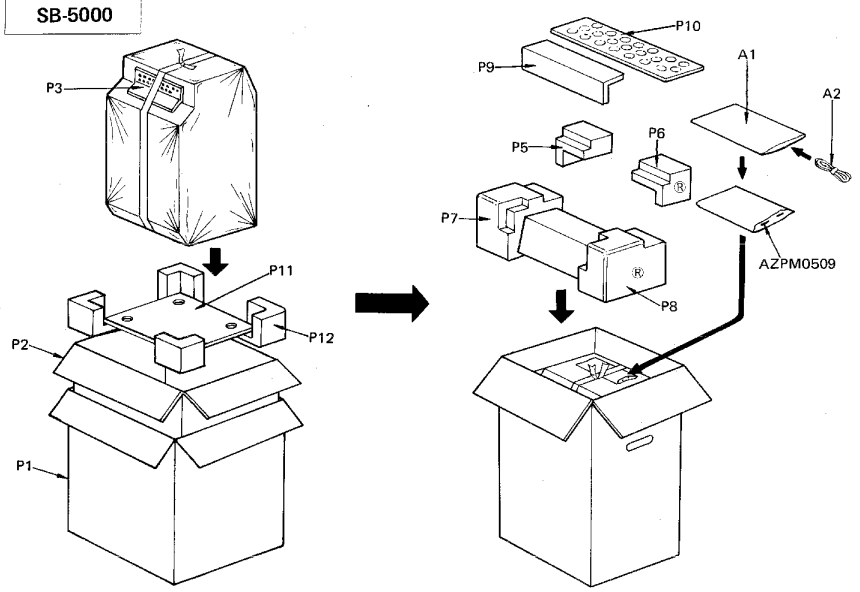

SB-6000

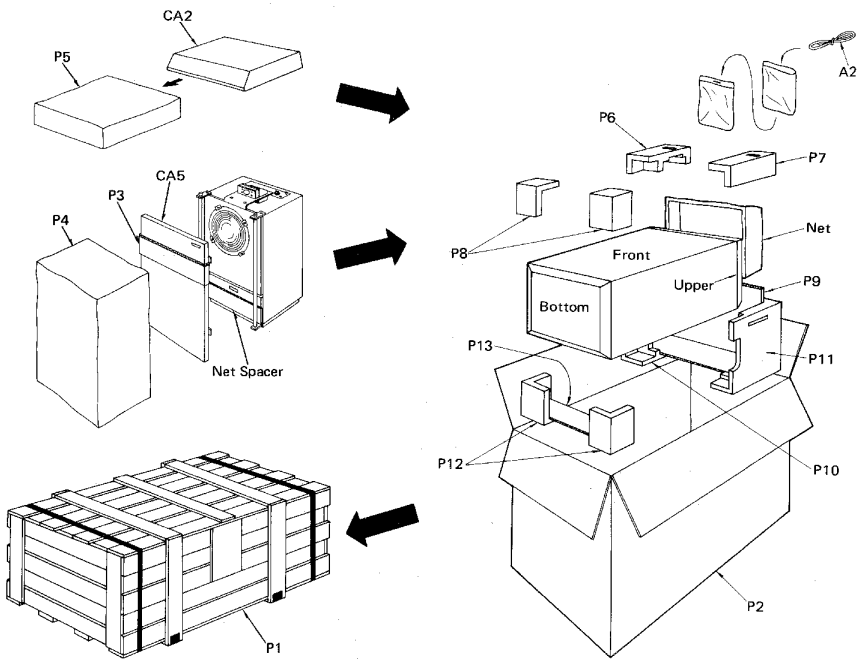

■ REMOVAL OF TWEETER (SB-6000, (MC)/SB-7000-(X), (MC))

If you separate the magnetism part from the vibration part at the front (Fig. 2), gotting them back in the same position will not be possible and therefore weaken the performance.

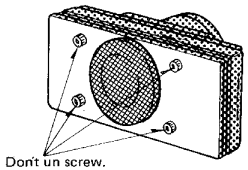

Fig. 1 Front of Tweeter

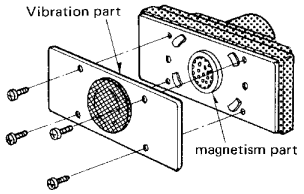

Fig. 2 Separated Tweeter

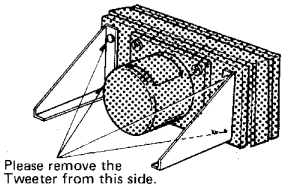

Fig. 3 Back of Tweeter

■ REPLACEMENT PART LIST

SB-5000

Ref. No.	Part No.	Description	Per Set (Pcs.)	Remarks
SP1	EAS25PL49S	Woofer Speaker	1	
SP2	EAS6PH13S	Tweeter, Speaker	1	
L1	SLCC102K	1.0mH, Coil	1	
L2	SLCC821K	0.82mH, Coil	1	
C1, C3	ECEA50Y6R8	6.8μF, 50V, Electrolytic	2	
C2	ECEA50Y22	22μF, 50V, Electrolytic	1	
C4	ECEA50Y15	15μF, 50V, Electrolytic	1	
R1	ERF5AK8R2	8.2μ, 5W, Wire Wound Resistor	1	
CA1	SKA8036	Cabinet	1	
CA1	SKA8037	Cabinet	1	SB-5000-(FE)
CA2	SYB495	Grill, Upper	1	
CA2	SYB495-2	Grill, Upper	1	SB-5000-(XDM)
CA3	SYB481-2	Grill, Lower	1	SB-5000-(X, XG)
CA3	SYB481-3	Grill, Lower	1	SB-5000-(FE)
CA3	SYB481-4	Grill, Lower	1	SB-5000-(XDM)
CA4	SHG1179-1	Rubber, Net Catch	2	
CA5	SHR9099-1	Foot, Net	2	
CA6	SHR541-1	Net Catch	2	
CA7	SHG1245-2	Net Catch	4	
CA8	SGB411	Badge	2	
CA8	SGB489	Badge	2	SB-5000-(FE)
CA9	SHG1301	Bushing	1	
CA10	SKX223	Foot	4	
CA11	SGT12190	Plate	1	
CA11	SGT-12210	Plate	1	SB-5000-(FE)
CA12	XVE5B25FZS	Screw, Woofer	4	
CA13	XVE4B25FZS	Screw, Tweeter	4	
CA14	SMN1371	Mounting Bracket, Woofer	4	
CA15	SWT253-2	Terminal Plate	1	
CA15	SWT253-3	Terminal Plate	1	SB-5000-(FE)
CA16	SGE103-2	Knob (Orange)	1	
CA17	SGE103	Knob (Black)	1	
		ACCESSORY PARTS		
A1	SQF1207	Printed Matter	1	
A1	SQF1231	Printed Matter	1	SB-5000-(FE)
A2	SWX177-1	Speaker Cord	1	
		PACKING MATERIALS		
P1	SPG613	Outside Packing	1	SB-5000-(X)
P1	SPG615	Outside Packing	1	SB-5000-(FE)
P1	SPG613-1	Outside Packing	1	SB-5000-(XDM, XG)
P2	SPN5123-2	Inside Packing	1	SB-5000-(X)
P2	SPN5123-4	Inside Packing	1	SB-5000-(FE)
P3	SPS239-1	Pad, Speaker	1	
P5	SPS169	Left Pad	1	
P6	SPS169-1	Right Pad	1	
P7	SPS167	Left Pad	1	
P8	SPS167-1	Right Pad	1	
P9	SPS175	Upper, Pad	1	
P10	SPS177-1	Top Pad	1	
P11	SPS181	Upper board	1	
P12	SPS173	Pad, Corner	4	

SB-6000

Ref. No.	Part No.	Description	Per Set (Pcs.)	Remarks
SP1	EAS30PL34S	Woofer Speaker	1	
SP2	EAS6KH70SA	Tweeter Speaker	1	
L1	SLCA681KU	0.68mH, Coil	1	
L2	SLCC821K	0.82mH, Coil	1	
L3, 4	SLCC122K	1.2mH, Coil	2	
C1	ECEA50Y22	22μF, 50V, Electrolytic	1	
C2	ECEA50Y33	33μF, 50V, Electrolytic	1	
C4	ECEA50Y15	15μF, 50V, Electrolytic	1	
C5, 6, 7	ECEA50Y68	68μF, 50V, Electrolytic	3	
R1, 2	ERF5AK6R8	6.8μ, 5W, Wire Wound Resistor	2	
VR1	EVM01GF26Z80	Varialbe Resistor, Attenuater	1	
CA1	SKA8073	Cabinet	1	
CA2	SYB485	Grill, Upper	1	SB-6000-(X, XDM)
CA2	SYB485-1	Grill Upper	1	SB-6000-(XGG, XGE)
CA3	SHG1179-1	Rubber, Net Catch	2	
CA4	SHR9099-1	Rug, Net	2	
CA5	SYB483-1	Grill, Lower	1	SB-6000-(X, XDM)
CA5	SYB483-3	Grill, Lower	1	SB-6000-(XGG, XGE)
CA6	SHG1295-1	Net Catch	2	
CA7	SHG1297-1	Net Catch	2	
CA8	SGB411	Badge	2	
CA9	SGE347	Plate, Pipe	4	
CA10	SGX625	Pipe	2	
CA11	SNE2007S	Screw, Pipe	2	
CA12	SUW909	Bracket, Pipe	2	
CA13	SKX205-3	Foot	4	
CA14	SGE343	Plate, Tweeter	1	
CA15	SGE345	Bracket, Woofer	4	
CA16	SMN1339	Bracket, Tweeter	2	
CA17	SHG1301	Bushing	1	
CA18	XVE4B20FCS	Bolt, Pipe	2	
CA19	XVE6B25FZ	Bolt, Woofer	4	
CA20	XVE5B40FZS	Bolt, Tweefer	2	
CA21	SBSA3-2	Knob	1	
CA22	SHR541-1	Net Catch (Black)	2	
CA22-1	SGK731	Label	1	
CA23	SGE103	Terminal (Black)	1	
CA24	SGE103-2	Terminal (Orenge)	1	
CA25	SNE271S	Terminal Screw	2	
CA26	SNE273	Knob, Screw	2	
CA28	SJT727	Terminal	2	
CA29	SWT265-X	Board, Terminal	1	
		(PACKING METERIALS)		
P1	SPG9005	Outside Packing Wooden	1	SB-6000-(X)
P2	SPN5137-1	Inside Packing Case	1	
P3	SPS259	Pad, Grill, Lower	1	
P4	SPP477	Bag	1	
P5	SPB1089	Gag, Grill, Upper	1	
P6	SPS265	Left Pad, Upper	1	
P7	SPS265-1	Right Pad, Upper	1	
P8	SPS269	Pad, Bottom	2	
P9	SPS257	Pad, Speaker	1	
P10	SPS267	Left Pad, Upper	1	
P11	SPS267-1	Right Pad, Upper	1	
P12	SPS269	Pad, Bottom	2	
P13	SPS263	Pad, Specer	1	
		(ACCESSORY PARTS)		
A1	SQF1195	Printed Matter	1	
A2	SWX177-1	Speaker Cord	1	
A3	SQX7027	Warrante Cord	1	SB-6000-(XGE)

Printed in Japan Ⓗ

ORDER NO. SD7601-1052-1

Service Manual

Linear Phase Speaker System

SB-5000/SB-6000

Supplement-1

PARTS MODIFICATION ON TWEETER PROTECTION

For additional information, please refer to the service manual for Model No. SB-5000,SB-6000.

Notes: * This service manual includes only the changes of the **SB-5000,SB-6000** service manual (ORDER NO.SD7601-1052).

* When servicing model **SB-5000,SB-6000** this service manual and **SB-5000,SB-6000** (ORDER NO. SD7601-1052) service manual should be used together.

CHANGES

■ REPLACEMENT PARTS LIST

SB-5000

Ref. No.	Change of Part No.		Part Name & Description	Per Set (Pcs.)		Remarks
	OLD	**NEW**				
F1	Addition	XBA1E06NS5	600mA, Fuse	1		
C3	ECEA50Y6R8	ECEA100Y4R7	4.7 μF, 100V, Electrolytic	1		
C5	Addition	ECEA50Y2R2	2.2 μF, 50V, Electrolytic	1		
CA1	SKA8036	SKA9811W	Cabinet	1		
CA18	Addition	**QTF1046**	Fuse Holder	1		
CA19	Addition	SMK31	Fuse Panel	1		
CA20	Addition	SHR9359	Rubber	1		
CA21	Addition	XMS31+10FZ	Screw	3		
	Addition	SQX4561	Caution Label	1		

SB-6000

Ref. No.	Chang of Part No.		Part Name & Description	Per Set (Pcs.)		Remarks
	OLD	**NEW**				
F1	Addition	XBA1E10NS5	1A, Fuse	1		
C4	ECEA50Y15	ECEA50Y10	10 μF, 50V, Electrolytic	1		
C8	Addition	ECEA50Y3R3	3.3 μF, 50V, Electrolytic	1		
CA1	SKA8073	SKA9832W	Cabinet	1		
CA30	Addition	**QTF1046**	Fuse Holder	1		
CA31	Addition	SMK31	Fuse Panel	1		
CA32	Addition	SHR9359	Rubber	1		
CA33	Addition	XMS31+10FZ	Screw	3		
	Addition	SQX4565	Caution Label	1		

National Technics

Matsushita Electric Trading Co., Ltd.
P.O. Box 288, Central Osaka Japan