SERVICE MANUAL

TEAC Tascam Series
MODEL 5 and 5A
AUDIO MIXER

TEAC®

TABLE OF CONTENTS

1. Introduction ---------- 1
2. Specifications ---------- 2
3. Simplified block diagrams ---------- 4
4. Opening the package ---------- 6
5. The controls and their function
   - 5.1 Input module ---------- 7
   - 5.2 Submaster module ---------- 9
   - 5.3 Master module ---------- 10
   - 5.4 Talkback module (optional) ---------- 11
6. Level setting and operation check
   - 6.1 Circuit check of LINE IN ⟶ DIRECT OUT ---------- 12
   - 6.2 Circuit check and adjust of LINE IN ⟶ LINE OUT ---------- 12
   - 6.3 Circuit check of CUE OUT and ECHO SEND ---------- 13
   - 6.4 Circuit check of MIC IN ⟶ LINE OUT ---------- 14
   - 6.5 Adjusting the INPUT MODULE Overload Indicator ---------- 15
   - 6.6 Checking the MONITOR system ---------- 15
   - 6.7 Checking the CONTROL ROOM monitor system ---------- 16
   - 6.8 Checking the STUDIO FEED monitor system ---------- 16
   - 6.9 Circuit check of ECHO RCV ---------- 17
   - 6.10 Circuit check of TAPE IN ⟶ LINE OUT ---------- 17
   - 6.11 Circuit check of SOLO ---------- 18
   - 6.12 Circuit check of TALKBACK MODULE ---------- 19
   - 6.13 Checking the HEADPHONES monitor system (Model 5A only) ---------- 20
7. Optional module and cascade connection
   - 7.1 Installation of the Model 204 Talkback Module ---------- 21
   - 7.2 Cascade connection of second mixer ---------- 21
8. Exploded views and parts list
   - 8.1 Main frame ---------- 22
   - 8.1A " " (Model 5A) ---------- 25
   - 8.2 Rear panel assembly ---------- 28
   - 8.2A " " " (Model 5A) ---------- 30
   - 8.3 Connector board assembly ---------- 32
   - 8.3A " " " (Model 5A) ---------- 34
   - 8.4 Meter panel assembly ---------- 36
   - 8.4A " " " (Model 5A) ---------- 38
   - 8.5 Power supply unit ---------- 40

8.6 Model 201 Input Module (Model 5 and 5A) ---------- 42
8.7 Model 202 Submaster Module (Model 5 and 5A) ---------- 44
8.8 Model 203 Master/Monitor Module (Model 5) ---------- 46
8.8A Model 203A Master/Monitor Module (Model 5A) ---------- 48
8.9 Model 204 Talkback Module (Model 5 and 5A) ---------- 50
8.10 Power Supply Module (Model 5A) ---------- 52
8.11 Blank Module Assembly (Model 5 and 5A) ---------- 54
9. PCB Assemblies and parts list
9.1 Power supply PCB assembly (Model 5) ---------- 56
9.1A " " " " (Model 5A) ---------- 58
9.2 Input amplifier PCB assembly (Model 5 and 5A) ---------- 60
9.3 Submaster amplifier PCB assembly (Model 5 and 5A) ---------- 63
9.4 Monitor amplifier PCB assembly (Model 5) ---------- 66
9.4A " " " " (Model 5A) ---------- 75
9.5 Talkback amplifier PCB assembly (Model 5 and 5A) ---------- 81
9.6 Connector board PCB assembly (Model 5 and 5A) ---------- 84
10. Circuit Schematics
10.1 Connector board and related circuitry ---------- 85
10.1A " " " " " (Model 5A) ---------- 86
10.2 Power supply unit (Model 5) ---------- 87
10.2A " " " (Model 5A) ---------- 88
10.3 Model 201 Input Module ---------- 89
10.4 Model 202 Submaster Module ---------- 90
10.5.1 Model 203 Master/Monitor Module (Serial No. up to 1600) --------- 91
10.5.2 Model 203 " " " (Serial No. from 1601) ---------- 92
10.5A Model 203A Master/Monitor Module ---------- 93
10.6 Model 204 Talkback Module ---------- 94

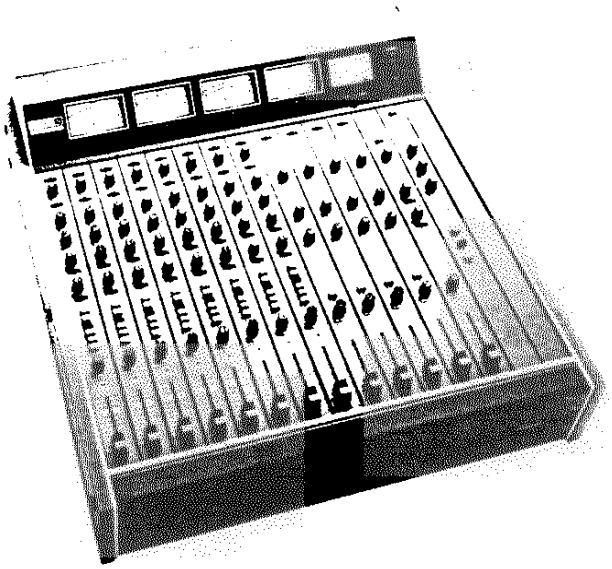

Model 5A

I. INTRODUCTION

The TEAC TASCAM Series Model 5A Audio Mixer is basically an 8 input, 4 output preamplifier-mixer. The inputs are selectable for 8 microphones, 8 lines, 4 tape recorder reproduce, or a combination of these three by top panel switches on each channel module which will provide, together with the mixers' other features, very flexible operation at original live recordings, overdubbing, and mixdowns when used in combination with TEAC tape recorders.

This Service Manual is a revision of the original Model 5 Manual but has been edited to serve both the Model 5 and 5A mixers.

2. SPECIFICATIONS

Input/output channels	8-in/4-out
Input selector	Chan. 1 ∿ 4 MIC/TAPE/LINE Chan. 5 ∿ 7 MIC/OFF/LINE Chan. 8 MIC/TEST/LINE
Mic input	
Mic impedance	200 ohms
Nominal input level	-50dB (3mV)
Minimum input level	-72dB (0.25mV)
Maximum input level	+25dB (17.8V)
Line input	
Line impedance	Greater than 50K ohms
Nominal input level	-10dB (0.3V)
Minimum input level	-26dB (50mV)
Maximum input level	+30dB (30V)
Line output/Aux. output	
Load impedance	Greater than 10K ohms
Nominal output level	-10dB (0.3V), -2dB (0.78V)[switchable]
Maximum output level	+18dB (7.8V)
4 channel monitor output	
Load impedance	Greater than 10K ohms
Nominal output level	-2dB (0.78V)
Maximum output level	+18dB (7.8V)
2 channel monitor output (for control room and studio)	
Load impedance	Greater than 10K ohms
Nominal output level	-2dB (0.78V)
Maximum output level	+18dB (7.8V)
Frequency response	30Hz ∿ 20KHz, ±2dB
Equivalent input noise	-125dB
Signal to noise, overall (measured at nominal input levels)	
One input (mic or line)	Greater than 75dB WTD, 70dB UNWTD
8 inputs (mic or line)	Greater than 65dB WTD, 60dB UNWTD
Equalization	Peak and dip type, ±15dB continuously variable Hi band - 3KHz ∿ 10KHz switchable Lo band - 75Hz ∿ 200Hz "
Crosstalk	Greater than 60dB (at 1KHz)
Distortion, overall (mic input to output)	0.1% THD maximum
Fader attenuation	Greater than 60dB
Send and receive data	
Accessory send level	Nominal -10dB (0.3V) into 10K ohms or higher
Accessory receive level	" " " " " " "
Echo send level	" " " " " " "
Echo receive level	" " " " " " "
Auxiliary input, Buss input, Tape input	
Input impedance	Greater than 10K ohms
Nominal level	-10dB (0.3V)
Solo input (for Expander Module)	
Input impedance	Greater than 10K ohms
Nominal level	-10dB (0.3V)
Echo input (for Expander Module)	
Input impedance	Greater than 10K ohms
Nominal level	-10dB (0.3V)

Cue input (for Expander Module)	
Input impedance	Greater than 10K ohms
Nominal level	-2dB (0.78V)
Cue output	
Load impedance	Greater than 10K ohms
Nominal level	-2dB (0.78V)
Direct output	
Load impedance	Greater than 10K ohms
Nominal level	-10dB (0.3V)
Headphone (M-5A only)	
Load impedance	Greater than 8 ohms
Maximum output	100mW
Studio feed (M-5 only)	
Load impedance	Greater than 8 ohms
Maximum output	Front: 100mW REar: 1W (2.8V)
Studio feed (M-5A only)	
Load impedance	Greater than 8 ohms
Maximum output	1W
Power requirements	117V (200V, 220V, 240V)AC, 50/60Hz, 40W
Dimensions (WHD)	23-1/8, 7-1/2, 24-1/2 inches
Weight	62 lbs.

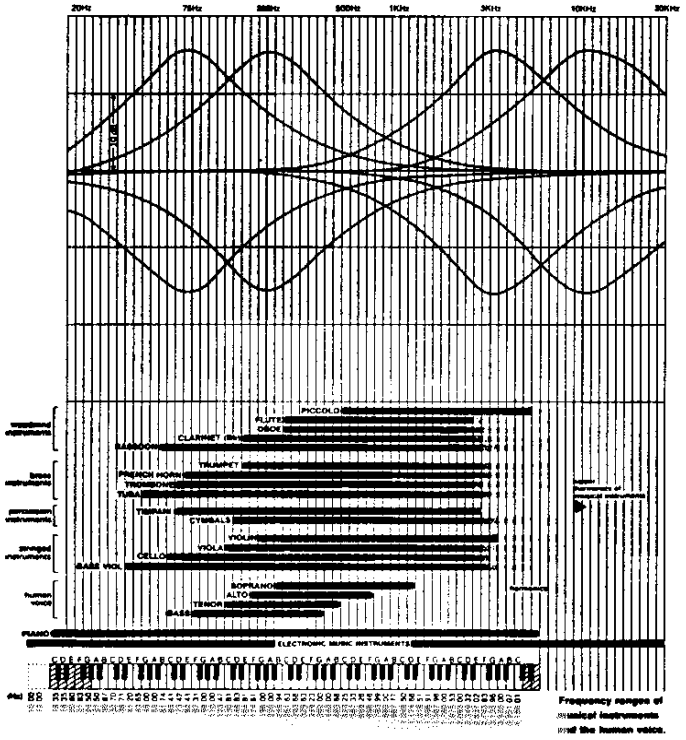

3. SIMPLIFIED BLOCK DIAGRAM

Model 5

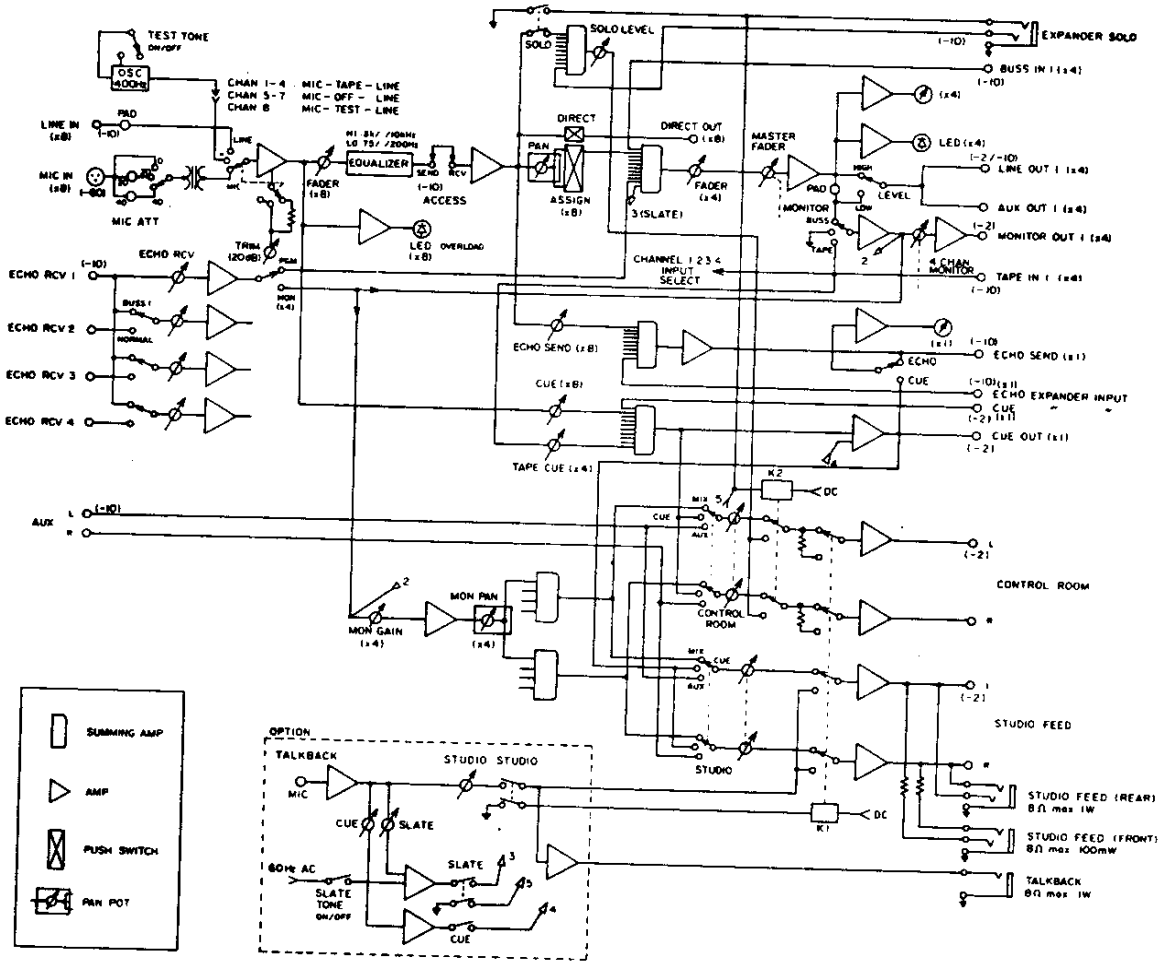

Model 5A

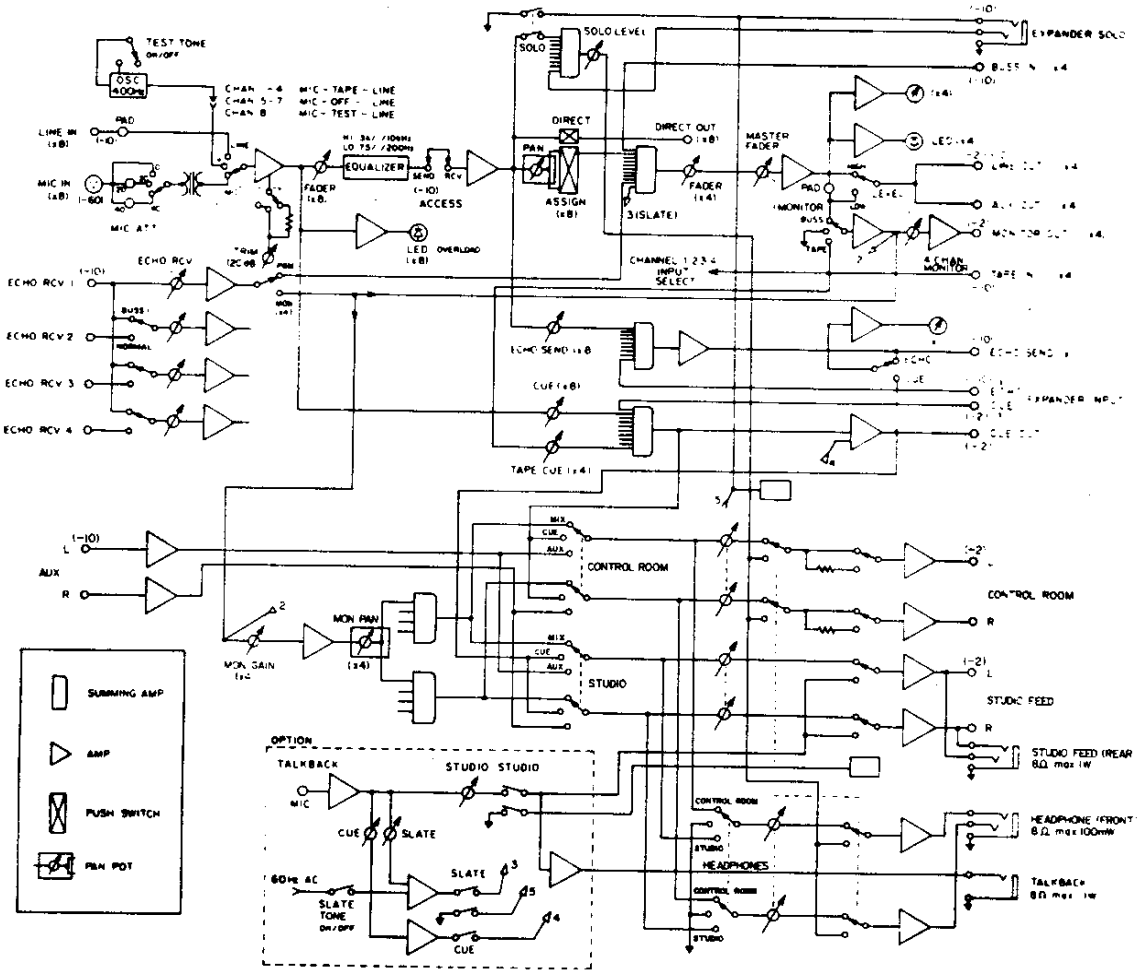
TEST TONE
OSC 400Hz
LINE IN
MIC IN
MIC ATT
EQUALIZER
ACCESS
FADER
LED OVERLOAD
ECHO RCV
ECHO RCV 1
ECHO RCV 2
ECHO RCV 3
ECHO RCV 4
SOLO
SOLO LEVEL
DIRECT
PAN
ASSIGN
DIRECT OUT
FADER
3(SLATE)
MASTER FADER
MONITOR
LEVEL
4 CHAN MONITOR
CHANNEL 1 2 3 4 INPUT SELECT
ECHO SEND
CUE
TAPE CUE
AUX
CONTROL ROOM
STUDIO
MON PAN
MON GAIN
OPTION
TALKBACK
MIC
SLATE
SLATE TONE
HEADPHONES
SUMMING AMP
AMP
PUSH SWITCH
PAN POT

4. OPENING THE PACKAGE

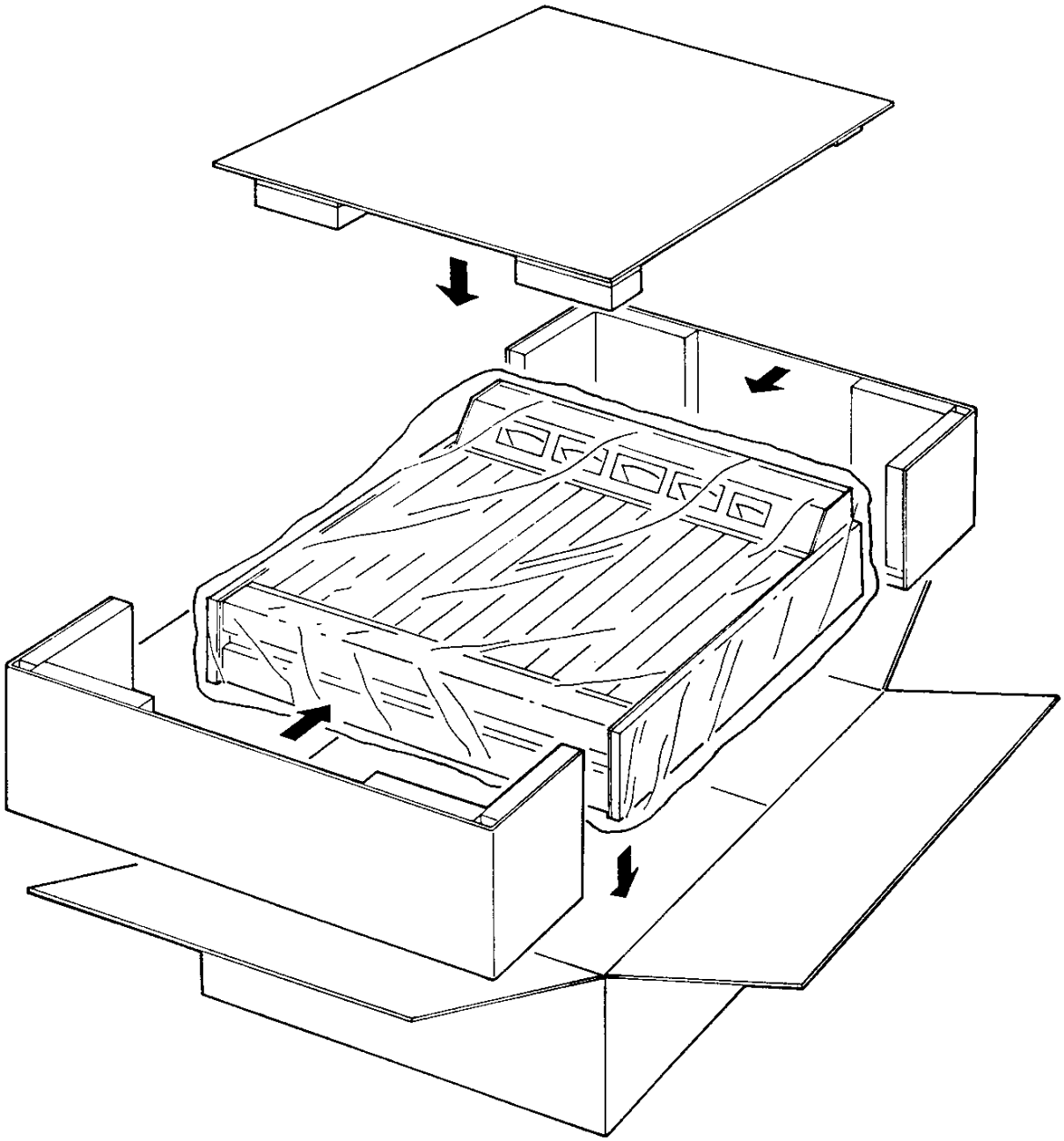

5. THE CONTROLS AND THEIR FUNCTION

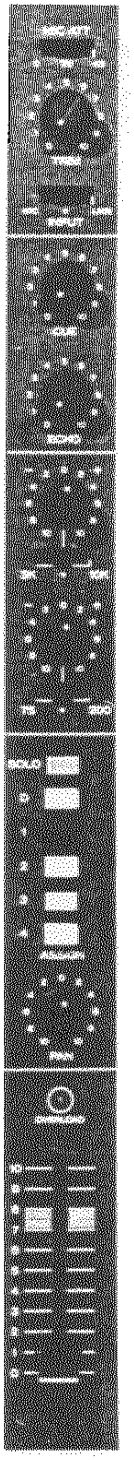

5.1 INPUT MODULE

Attenuation

A 3-position switch for 0, 20 or 40dB of padding for mic signals. The pad is located before the mic transformer and preamp to help prevent them from being overdriven, a common cause of distortion.

Trim

A rotary pot that provides from 0 to 20dB of continuously variable gain reduction for mic, tape or line signals.

Input selector

A 3-position switch that determines the signal to be passed - mic or line. The center positon on inputs 1 thru 4 is for tape reproduce from the outputs of a 4-track recorder patched into the TAPE IN jacks on the back panel. The center positon on inputs 5 thru 7 is OFF. On input 8, the center position works in conjunction with the built-in test oscillator on the master module for setting levels and general calibration.

Cue

A foldback pre EQ and fader, typically used in conjunction with tape cue (on the submaster modules) as a 12 X 1 independent submix for the musicians' headphones.

Echo

A foldback post EQ and fader, before the channel assignment, typically used for echo send to an external reverberation unit. Echo receive is on the submaster modules.

EQ

The peak and dip equalizers provide 15dB of boost or cut, continuously variable , at the following frequencies: 3KHz or 10KHz, selectable; 75Hz or 200Hz, selectable. The center position is OFF.

Channel assignment

SOLO - allows you to monitor selectively any of the 8 active input channels to the exclusion of all others. Depressing the momentary button does not affect the program buss - solo is a function of the control room monitor circuit only. The signal is post EQ and fader.

D - is a direct output post EQ and fader when it is desirable to by-pass the summing amplifiers in the submaster modules.

The color-coded, numbered channel assignment buttons allow any signal to be assigned to any or all of of four output busses.

Pan

Whenever more than one output is assigned, pan is automatically engaged. The apparent acoustic image of those signals may then be placed at its desired positon within the panoramic perspective. Rotating the pan control counter clockwise moves the acoustic image toward the monitors connected with the lower numbered output busses, clockwise to move the image to the higher numbered busses. In most situations, you'll be panning in stereo - between the left and right monitor - but you can create some interesting effects by selecting 3 or all 4 assignment buttons in a 4-channel monitoring application (see the diagram). In the normal situation, say between 1 and 3, you will notice approximately a 3dB drop when the pan control is centered (0), the signal distributed equally between the monitors. This dip compensates for what would otherwise be an audible peak in the center. So as you move the apparent acoustic image from extreme left to extreme right, you will notice a smooth, even pan.

Overload

The LED overload indicator is after attenuation and trim, before the equalizers and fader. When the LED ignites, the first input stage is being overdriven and the attenuator/ trim controls should be adjusted accordingly.

Straight line fader

Regulates the overall send level of that input module. The shaded grey area on the fader scale represents the relatively optimum operating range of the fader - it is not a critical reference.

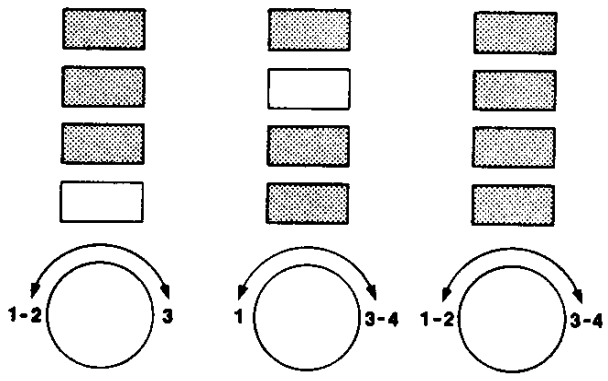

Typical examples of multichannel panning

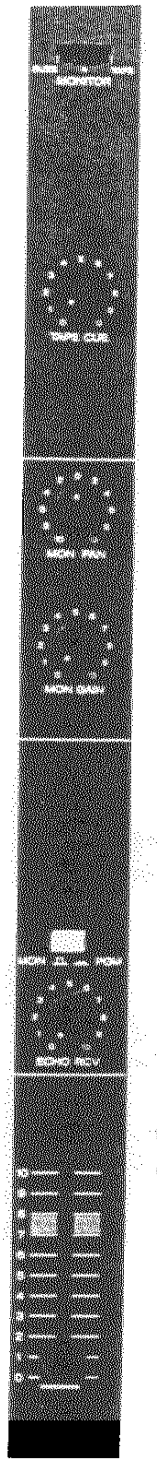

5.2 SUBMASTER MODULE

Buss tape monitor

Determines the signal to be sent through the control room monitor circuit. BUSS is the program mix (line output) of the Model 5. TAPE is for reproduce (line out) of the 4-track recorder connected to the TAPE IN jacks on the back panel.

Tape cue*

With the 8 input cue level controls, these 4 controls provide an independent 12 X 1 mix, typically for the musicians' headphones, of previously recorded tracks with the program material to be overdubbed.

Monitor pan and gain*

This section of the submaster modules is another independent submix (4X2), typically for the control room monitors. Without affecting the program mix, each of the 4 monitor busses may be individually adjusted for pan and gain to provide the operator with the desired stereo monitor mix.

* These controls work in conjunction with the Studio Select and the Control Room Select switches on the master module.

Echo receive

The rotary level control determines the amount of reverberated signal you wish to add to a given output channel. The up position of the buttons allows you to hear echo receive over the control room monitor circuit only; in the down position, the reverberated signal is sent to the program buss as well.

Submaster fader

Determines the overall level for a given program buss. Normally the Submaster Faders will be set in the grey, shaded areas, but it is not uncommon at all - especially if the selection and assignment of the inputs has been carefully thought out - to make dynamic adjustments on the Submasters during the recording process in order not to disturb the premix of two or more inputs assigned to a given submaster.

M-5 M-5A

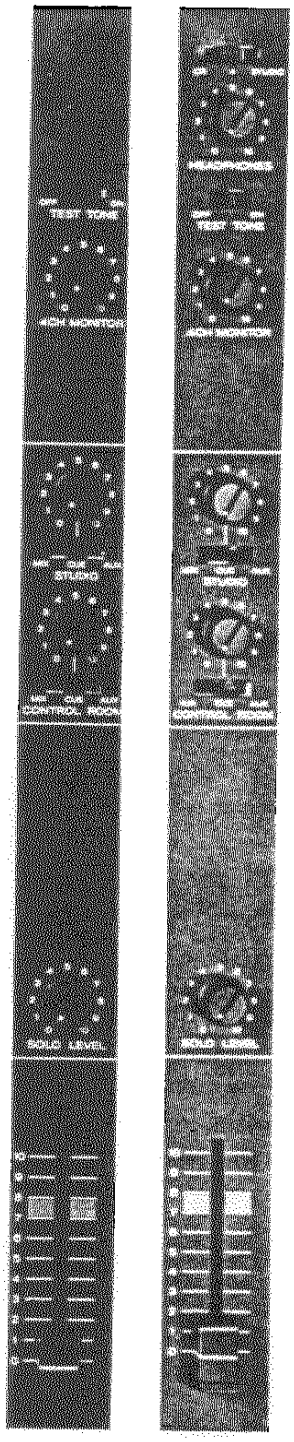

5.3 MASTER MODULE

Headphone select/level control

The front headphone jack output is controlled by this 3-position switch and the rotary pot.

On the 3-position switch, CR stands for control room monitor, STUDIO the studio feed monitor, and at center position there will be no output at the headphone jack.

Regardless to setting of this 3-position switch, monitoring of SOLO will always be given priority when the SOLO button is depressed.

Test tone

In the ON position, a 400Hz tone will be on input 8 (input selector, center position). The fader and trim controls will determine the level of the test signal which may be assigned to any or all output busses for setting levels and general calibration.

4 channel monitor

A 4-ganged pot for overall level control of quadraphonic material, used in conjunction with the individual channel monitor outputs on the back panel.

NOTE: In determining the suitability of this circuit for a specific application, refer to the block diagram and note that the slate and solo functions are not accessible on this 4-channel monitor circuit.

Studio monitoring

A 3-position switch with a level control to send the monitor MIX (4 X 2 monitor submix), the CUE send (input cue and tape cue), or AUX (a stereo return, typically from the 2-track mixdown recorder) to the studio monitors or headphones.

Control room monitoring

A 3-position switch with a level control for selective monitoring of the MIX (4 X 2 monitor submix), the CUE send or the AUX return (see above).

Solo level

Determines the level of the signal you wish to monitor via solo so that you can adjust the solo level relative to the regular monitor level.

Master fader

A 4-ganged pot for the overall level control of the Model 5 and 5A program line output.



5.4 TALKBACK MODULE (optional)

Slate tone

A 60Hz tone is sent to the program line outputs when the oscillator is switched on and when the slate button is then depressed. In fast wind modes the tape recorder will reproduce that tone as a high pitched bleep - thus facilitating search and cuing.

Built-in mic

3 momentary buttons, each with its own level control direct the operation of the mic.

CUE - enables the operator's voice to appear on the cue buss (musicians' headphones).

SLATE - always mutes the control room monitors and allows the operators' voice to appear on the program buss - normally in order to identify the tune or take number.

STUDIO - Operators' voice is sent to the studio talkback speaker (internal 1 watt amplifier provided).

VU Meters

The VU-type level averaging meters are complemented with fast acting LED peak indicators. Together they provide an excellent medium for visually monitoring output levels. But remember that your ears have to be the final judge of what your eyes see. The fifth meter can be switched to read either the echo send level or the cue send level.

6. LEVEL SETTING AND OPERATION CHECK

6.1 Circuit check of LINE IN ⟶ DIRECT OUT

1) Apply a 1KHz, -10dB (0.3V) signal to the LINE IN pin jack.
2) Plug in a Level Meter to the DIRECT OUT pin jack.
3) Set the INPUT MODULE controls as follows:

INPUT	Set to LINE.
EQUALIZER	Set switch to OFF, and pot to "0".
ASSIGN	Depress "D".
PAN	Set to "0".
FADER	Raise to the shaded grey area.

4) Adjust TRIM for a -10dB (0.3V) reading on the Level Meter.

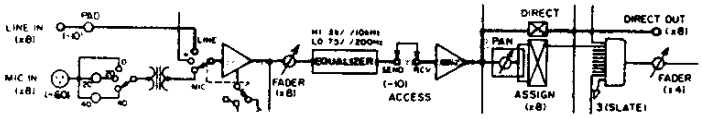

6.2 Circuit check and adjusting of LINE IN ⟶ LINE OUT

1) Apply a 1KHz, -10dB signal to the LINE IN pin jack.
2) Plug in a Level Meter to the LINE OUT 1 pin jack.
3) Set the rear panel LEVEL slide switch to HIGH.
4) Depress ASSIGN button "1" with all other controls set as described in Item 6.1.
5) Set faders of the SUBMASTER MODULE and the MASTER/MONITOR MODULE to the shaded grey area.
6) Adjust the SUBMASTER GAIN pot, R101, to obtain a -2.2dB reading on the Level Meter connected to LINE OUT 1.

   Frequency response must be within ±1.0dB wehn the input signal frequency is swept from 30Hz ∿ 20KHz.
7) Adjust the SUBMASTER MODULE METER CAL pot, R102, to obtain a 0VU reading on the CH-1 VU meter (left side of meter bridge).

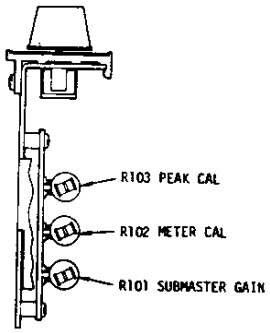

8) Raise the LINE IN signal level 10dB and adjust the PEAK CAL pot, R103, to a point where the peak indicating LED inside the VU meter ignites.

Adjust PEAK CAL so that Peak Indicator ignites at +10dB above OVU level and not ignite at +9dB.

9) After adjusting CH-1, adjust CH-2 through CH-4 in the same manner.

[Example] To adjust CH-2, reconnect the Level Meter to LINE OUT 2 and depress ASSIGN button 2.

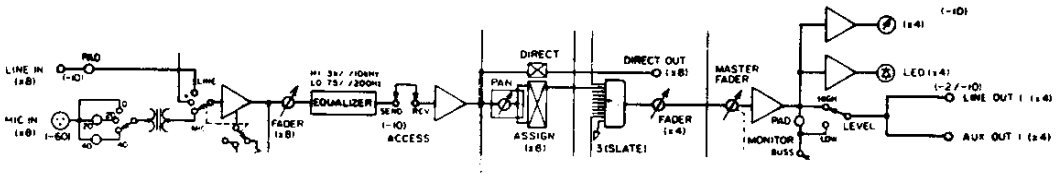

6.3 Circuit check of CUE OUT and ECHO SEND

CUE OUT and ECHO SEND circuits are adjusted only after completing adjustment of the LINE OUT levels for CH-1 ∿ CH-4.

1) Plug the Level Meter into CUE OUT and apply an operating level signal (-10dB) to LINE IN. Adjust the top panel CUE pot on the INPUT MODULE for a -2.2dB reading on the Level Meter.
2) Switch the CUE/ECHO VU Meter Selector to CUE and adjust METER CAL pot, R102, inside the MASTER/MONITOR MODULE (Model 203), for a OVU reading on the VU meter.
3) Adjust the CUE control for a -2.2dB level at CUE OUT.
4) Plug a Level Meter into the ECHO SEND pin jack and adjust the ECHO control for a -10dB reading on the Level Meter.
5) Switch the VU Meter Selector to ECHO and check that the VU meter indicates OVU.

NOTE: INPUT MODULE controls must be set as described in Item 6.1, 3).

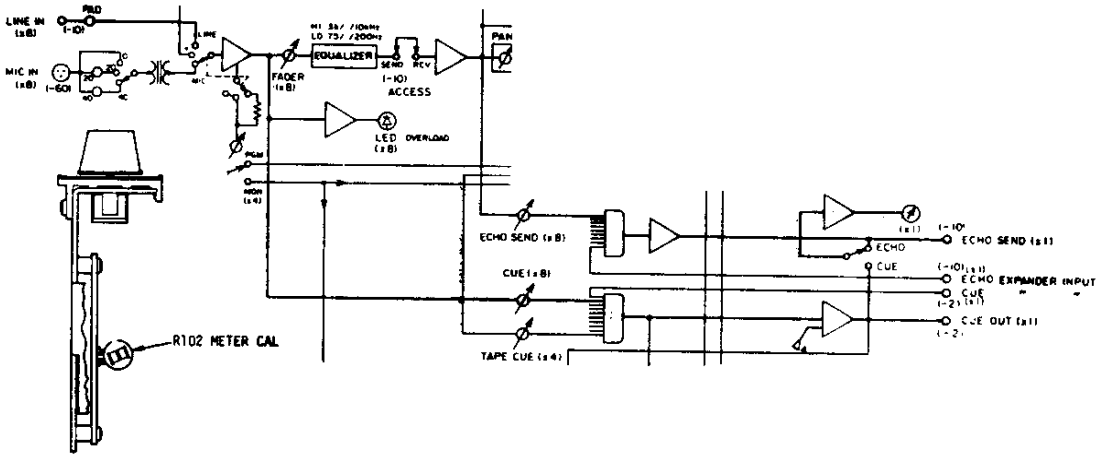

6.4 Circuit check of MIC IN ⟶ LINE OUT

1) Apply a 1KHz, -50dB signal to MIC IN 1.
2) Plug in a Level Meter to the LINE OUT 1 jack.
3) Set the INPUT MODULE controls as follows:

INPUT	Set to MIC.
MIC ATT	Set to "0".
EQUALIZER	Set switch to OFF, and pot to "0".
ASSIGN	Depress 1.
PAN	Set to "0'.
FADER	Raise to the shaded grey area.

4) Set faders of the SUBMASTER MODULE and the MASTER/MONITOR MODULE to the shaded grey area.
5) Adjust the top panel TRIM pot for a -2.2dB level at LINE OUT 1. Under this condition, if the TRIM pot knob is between 3 and 5 on the scale, the circuit is in good condition.

   Sweep the input signal from 30Hz ∿ 20KHz and check that the frequency response is within ±2.0dB.
6) Depress the ASSIGN buttons 2 through 4 one at a time and check for a -2.2dB output and also the frequency response, at LINE OUTs' 2 through 4.
7) Check MIC IN 2 through 8 in the same manner. Depress the ASSIGN buttons in all combinations and check the PAN control for proper operation. Check the EQUALIZER for its correct response as shown by the curves below.

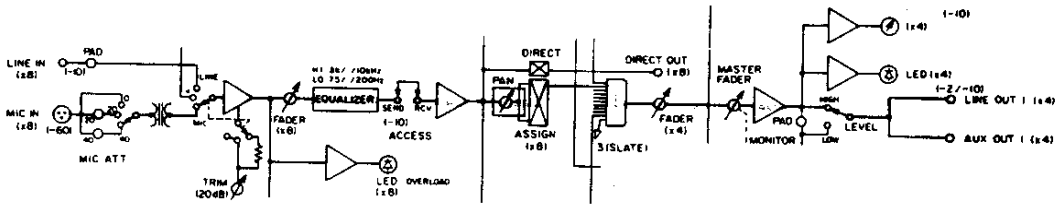

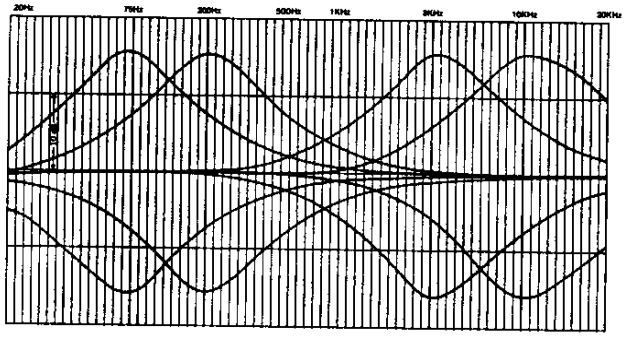

6.5 Adjusting the INPUT MODULE Overload Indicator

1) Apply a 1KHz, -20dB signal to MIC IN 1.
2) Set the INPUT MODULE controls as described in Item 6.4, 3).
3) Adjust R101, on the PCB inside the INPUT MODULE, so that the LED ignites at a 30dB higher level (-20dB input) from OVU, and not ignite at a 29dB higher level. (-21dB input).

NOTE: Return the master fader to "0" during adjustment of R101 to avoid damaging the meter.

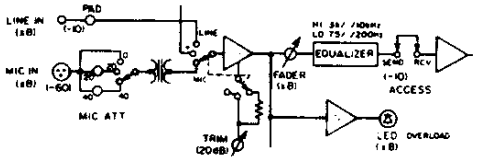

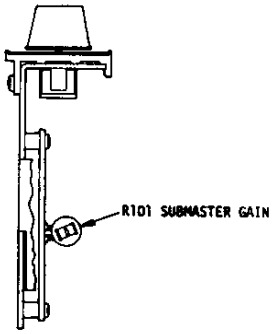

6.6 Checking the MONITOR system

1) Apply a 1KHz, -10dB signal to the LINE IN pin jack.
2) Plug in a Level Meter to the MONITOR OUT 1 ∿ 4 pin jacks.
3) Set the INPUT MODULE controls as follows:

INPUT	Set to LINE.
EQUALIZER	Set switch to OFF, and pot to "0".
ASSIGN	Depress 1, 2, 3, and 4.
PAN	Set to "0".
FADER	Raise to the shaded grey area.

4) Set faders of the SUBMASTER MODULE and MASTER/MONITOR MODULE to the shaded grey area.
5) Adjust TRIM for a OVU reading on the CH-1, -2, -3, and -4 VU meters.
6) Set the MONITOR switch to BUSS on all the SUBMASTER MODULES.
7) Adjust the MONITOR pot for all four channels to obtain a -2.2dB reading on the Level Meter. The pot setting should then be around 7 or 8 on the scale.

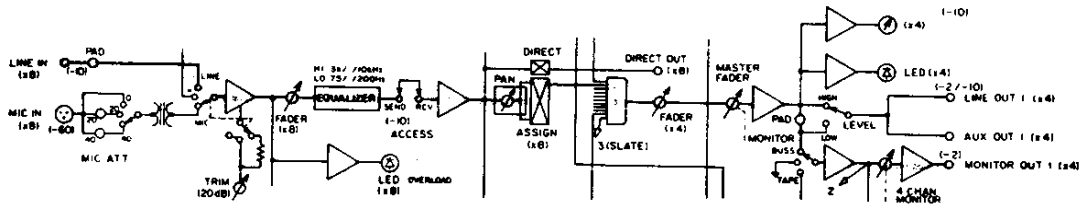

6.7 Checking the CONTROL ROOM monitor system

1) All controls are set as described in Item 6.6.
2) Set the SUBMASTER MODULE controls as follows:
   MON PAN Set to "0".
   MON GAIN Set to "10" (max).
3) Set the MASTER/MONITOR MODULE CONTROL ROOM switch to MIX.
4) Plug in Level Meter to the rear panel CONTROL ROOM, L and R pin jacks.
5) Adjust the top panel CONTROL ROOM pot for a -2.2dB reading on the Level Meter. The pot setting should then be around 7 or 8 on the scale.

6.8 Checking the STUDIO FEED monitor system

1) Set all controls as described in Item 6.7.
2) Set the MASTER/MONITOR MODULE STUDIO FEED to MIX.
3) Plug in a Level Meter to the rear panel STUDIO FEED, L and R pin jacks.
4) Adjust the top panel CONTROL ROOM pot for a -2.2dB reading on the Level Meter. The pot setting should then be around 7 or 8 on the scale.
5) An 8 ohm headphone can be directly plugged into the 3-conductor jack on both the front and rear panels.

Front jack (on Model 5 only)	Max. 100mW
Rear jack	" 1W

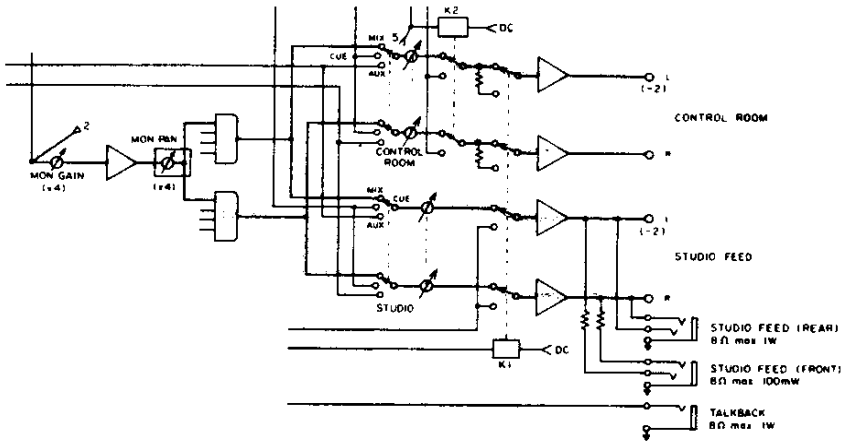

6.9 Circuit check of ECHO RCV

1) Apply a 1KHz, -10dB signal to the ECHO RCV 1 pin jack.
2) Set the rear panel ECHO RCV switch to NORMAL.
3) Set the SUBMASTER MODULE controls as follows:
   MON/PGM Set to PGM.
   FADER Set to the shaded grey area.
4) The circuit should be in normal good condition if the VU meter indicates OVU when the SUBMASTER MODULE ECHO RCV pot is at maximum.
5) Check the ECHO RCV circuits of channels 2, 3, and 4 in the same manner.
6) When the rear panel ECHO RCV switch is set to BUSS 1, the 1KHz, -10dB signal is applied to ECHO RCV 1.
   NOTE: An input cannot be applied to ECHO RCV 2, 3, or 4 by switching BUSS 1.
7) The circuit should be in good condition if the VU meter indicates OVU with each SUBMASTER MODULE ECHO RCV pot set at maximum.

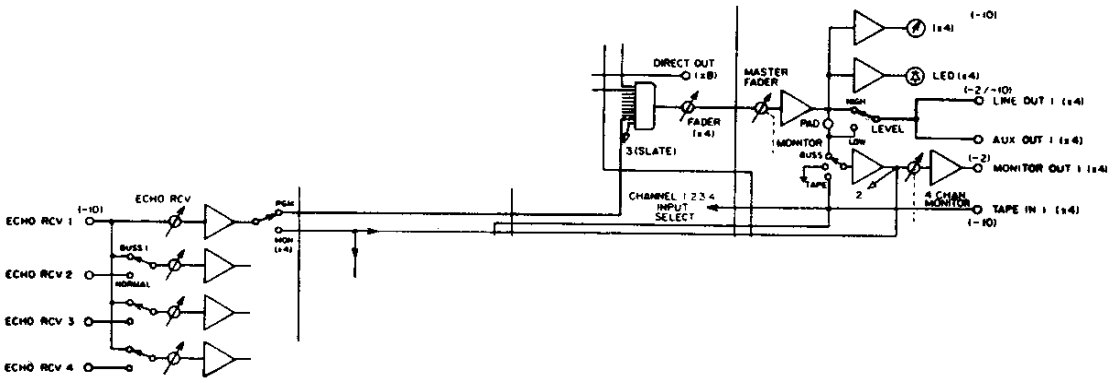

6.10 Circuit check of TAPE IN ⟶ LINE OUT

1) Apply a 1KHz, -10dB signal to the TAPE IN pin jack.
2) Plug in a Level Meter to the LINE OUT 1 pin jack.
3) Set the rear panel LEVEL switch to HIGH.
4) Set the INPUT MODULE controls as follows:
   INPUT Set to "0".
   ASSIGN Depress "1".
   PAN Set to "0".
   FADER Raise to the shaded grey area.

5) Set faders of the SUBMASTER and MASTER/MONITOR modules to the shaded grey area.
6) Adjust the INPUT MODULE TRIM pot to obtain a -2.2dB reading on the Level Meter. The TRIM pot setting should then be around 7 or 8 on the scale.
7) Check the "O" (TAPE) for channels 2, 3, and 4 in the same manner.

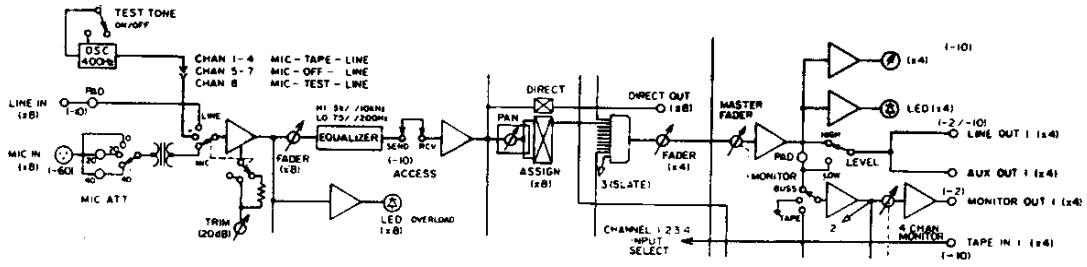

6.11 Circuit check of SOLO

1) Apply a 1KHz, -10dB signal to the LINE IN 1 pin jack.
2) Plug in a Level Meter to the CONTROL ROOM L or R pin jack.
3) Depress the INPUT MODULE SOLO button and adjust the MASTER/MONITOR MODULE SOLO LEVEL pot to obtain a -2.2dB reading on the Level Meter.
4) Check the INPUT MODULES for channels 2 through 8 in the same manner.

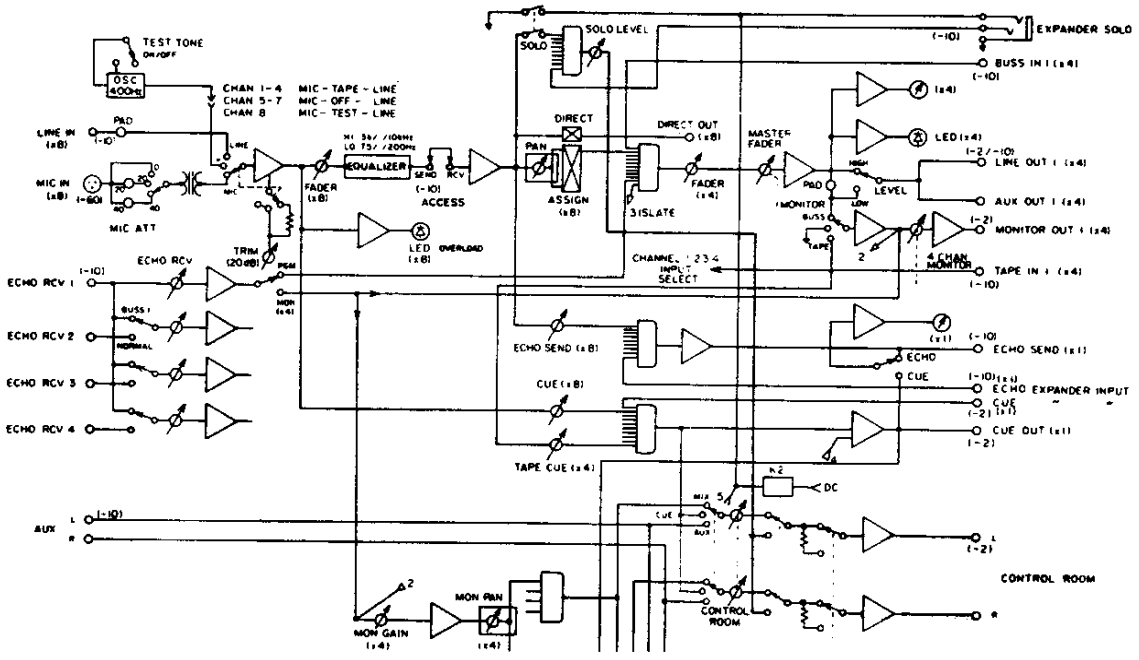

6.12 Circuit check of TALKBACK MODULE

1) Set the MASTER and all SUBMASTER faders to the shaded grey area.
2) With the SLATE button depressed, there should be a signal from LINE OUT 1 through 4 when spoken into the built-in mic.
3) With the SLATE TONE switch ON, there should be a 60Hz tone from LINE OUTs' 1 through 4 when the SLATE button is depressed.
4) When the CUE button is depressed, the built-in mic output should appear at the CUE OUT and STUDIO FEED jacks and no output at the CONTROL ROOM jack.
5) When the STUDIO button is depressed, the TALKBACK output should be obtained at the front and rear panel STUDIO FEED jacks.

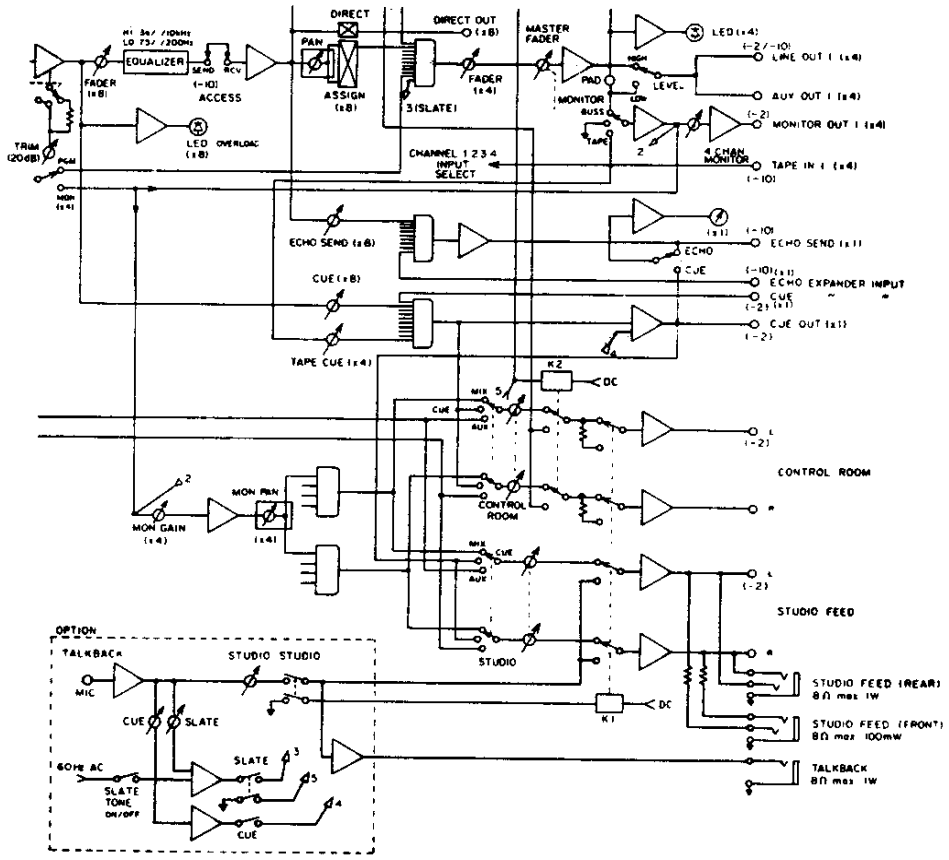

6.13 Checking the HEADPHONES monitor system (Model 5A only)

1) First, follow the procedure in Item 6.7 or 6.8.
2) When the specified -2dB (0.775V) is being output from the CONTROL ROOM monitor out jack, set the HEADPHONES slide switch to CR and its level control knob full CW. Thus set, a 100mW output into an 8 ohm load can be obtained at the Model 5A front HEADPHONES jack (some initial production units are marked STUDIO FEED).
3) Even when the signal is being output from STUDIO FEED, it can also be monitored with the headphones by setting the HEADPHONES slide switch to STUDIO.
4) In the SOLO mode, the signal to the headphones will also be the SOLO output regardless to position of the HEADPHONES slide switch, and also in this mode, the headphones level control will have no affect on the solo level.

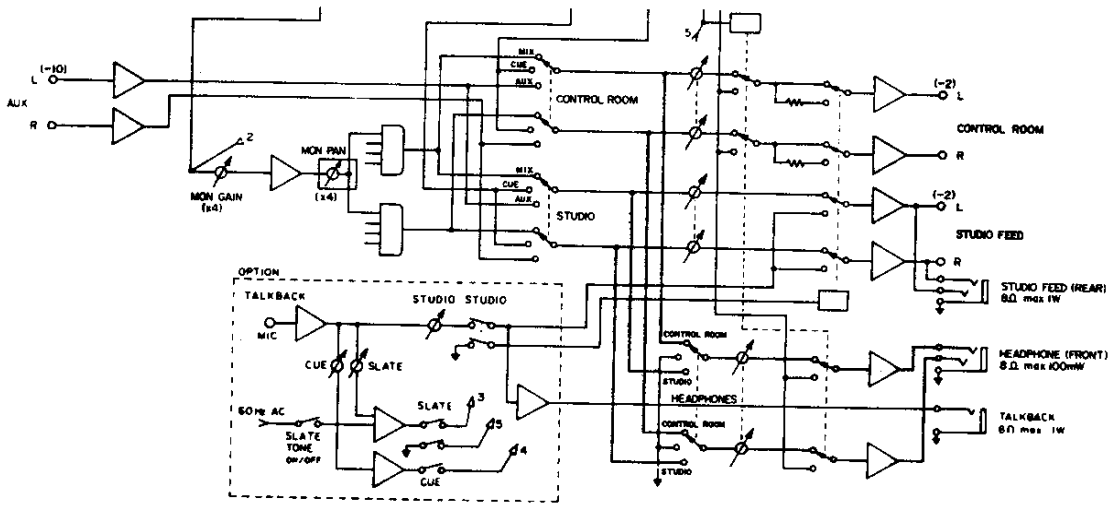

7. OPTIONAL MODULE AND CASCADE INSTALLATION

7.1 Installation of the Model 204 Talkback Module

1) Turn OFF the power switch and do not plug power cord in the AC mains.
2) Of the screws securing the side wooden panels onto the main frame, remove the extreme front upper screw from both sides.
3) Pull the pad and front panel, which is hinged at the bottom, forward and down.
4) Remove the screws securing the filler panel unit and remove the unit from the main frame.
5) Insert the Model 204 Talkback Module into this space and secure module onto the main frame by the front screw.
6) Refer to Section 6.12 for circuit check procedure of this module.

7.2 Cascade connection of second mixer

1) Connect the main mixer EXPANDER INPUT CUE pin jack with an auxiliary cable to the CUE OUT pin jack on the second mixer to be cascaded.
2) Connect the main mixer EXPANDER INPUT ECHO pin jack to the ECHO SEND pin jack on the second mixer in the same way.
3) Plug in the phone plug (Side A, diagram below) to the main mixer EXPANDER SOLO jack, and the phone plug on the other end (Side B) to the second mixer EXPANDER SOLO jack, and RCA pin plug to the CONTROL ROOM (MONITOR) L pin jack, also on the second mixer.

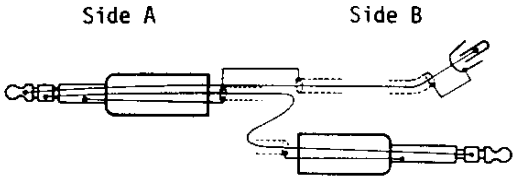

(Parts No. 6049 2470)

8. EXPLODED VIEWS AND PARTS LIST

8.1 MAIN FRAME (Model 5 only)

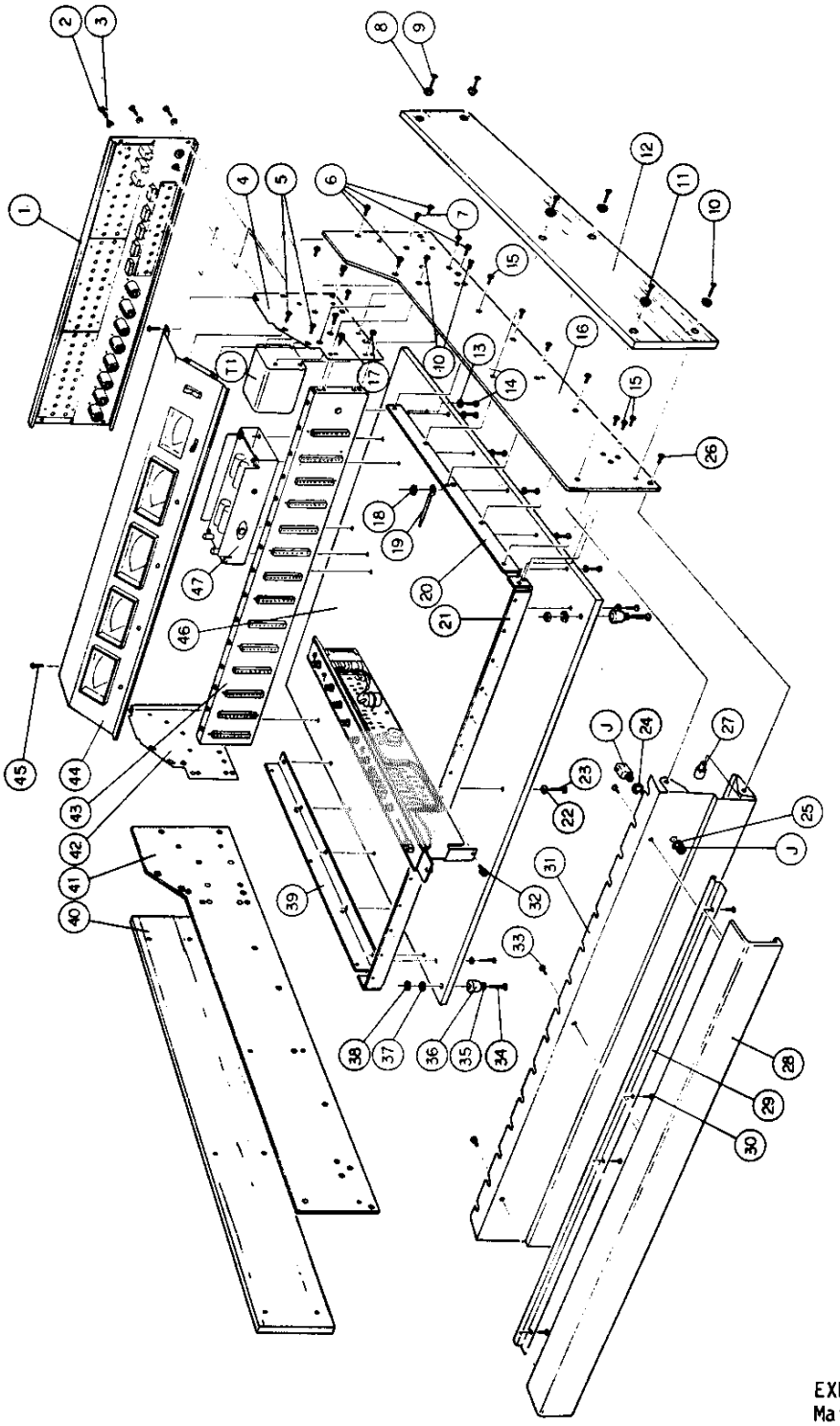

EXPLODED VIEW
Main frame
REV. _____

Title	Main Frame	
Ref. No.	Description	Parts No.
1	Panel, rear	6085 2350
2	Screw, BM3X6, Ni, black	
3	Washer, Mylar, I.D. 3mm	
4	Support, meter panel (right)	6037 2111-02
5	Screw, BM3X6, Ni	
6	" , BTBM3X6	
7	" , BM3X8	
8	Washer, trim, plastic, I.D. 4mm	5027 6930
9	Screw, BM4X20, Ni	
10	" , BM4X8	
11	" , BM4X25	
12	Board, side dress (right)	6038 2651-01
13	Washer, trim, I.D. 4mm, Ni	
14	Screw, OM4X18, Ni	
15	" , BTBM3X6	
16	Panel, side (right)	6036 1462
17	Screw, BSAM3X6	
18	Nut, hex, 4mm	
19	Clamp, cord	5093 7240
20	Angle, iron "L"	6037 2041
21	Plate, module locking	6037 2050
22	Washer, trim, I.D. 4mm, Ni	
23	Screw, OM4X20, Ni	
24	Spacer, fiber, thickness 3mm	
25	Washer, phone jack	6003 0250
26	Screw, BM3X6	
27	Pin, hinge	6004 9590
28	Pad, arm rest	6038 0461
29	Plate, strip, module number	6036 1431
30	Screw, FM3X5	
31	Panel, front	6036 1441
32	Screw, BSAM4X8	
33	" , BSAM3X8	
34	" , BM3X25	
35	Washer, I.D. 3mm, thickness 0.5mm	

PARTS LIST
Main Frame
REV. 1

Ref. No.	Description	Parts No.
36	Bumper, rubber	5028 3830
37	Washer, I.D. 3mm, thickness 0.8mm	
38	Nut, hex, M3	
39	Angle, iron "L"	6037 2041
40	Board, side dress (left)	6038-2651-02
41	Panel, side (left)	6036 1472
42	Support, meter panel (left)	6037 2111-01
43	Panel ass'y, connector mtg. (w/conn. & mother board)	6085 2330
44	Panel ass'y, meter mtg.	6085 2360
45	Screw, BM3X6	
46	Board, base	6038 2661
47	Unit, power supply	6085 2120
J15	Jack, phone, 3-conductor	5043 2980
T 1	Transformer, power, 117V	6046 0420
T 1	" , " , 117/220~240V	6046 1480

PARTS LIST
Main Frame
REV. 1

8.1A MAIN FRAME (Model 5A only)

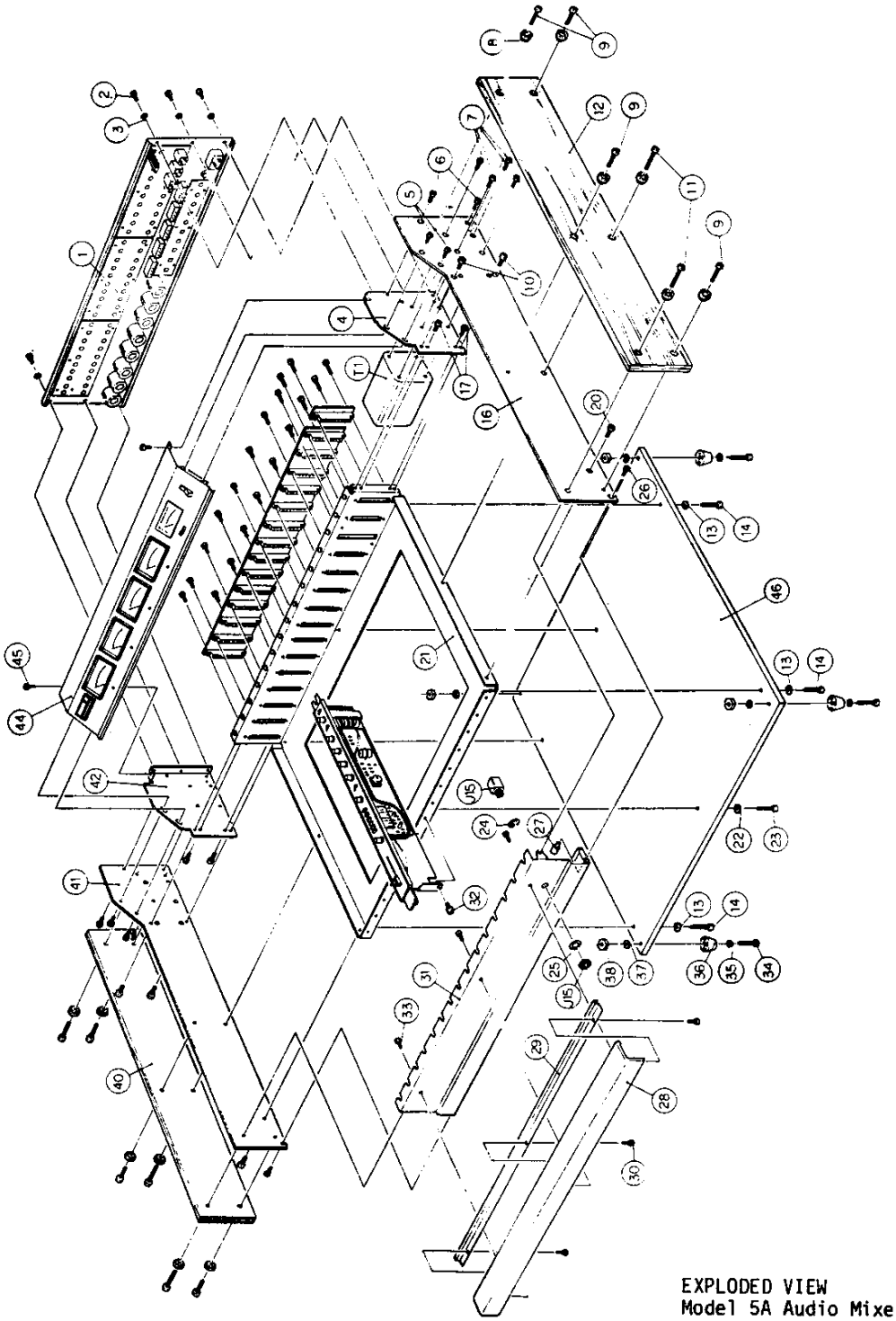

EXPLODED VIEW
Model 5A Audio Mixer
Main frame
REV. _____

Title	Main Frame	
Ref. No.	Description	Parts No.
1	Rear panel assembly	6036 2120
2	Screw, BM3X6, Ni, Black	
3	Washer, Mylar, I.D. 3mm	
4	Support, meter panel (right)	6037 2111-02
5	Screw, BM3X6, Ni	
6	" , BTBM3X6	
7	" , BM3X6	
8	Washer, trim, plastic, I.D. 4mm	5027 6930
9	Screw, BM4X20, Ni	
10	" , BM4X8	
11	" , BM4X25	
12	Board, side dress (right)	6038 2651-2
13	Washer, trim, I.D. 4mm, Ni	
14	Screw, OM4X18, Ni	
15	(deleted)	
16	Panel, side (right)	
17	Screw, BSAM3X6	
18	(deleted)	
19	(")	
20	Screw, BM4X8	
21	Frame, main	6037 3530
22	Washer, trim, I.D. 4mm, Ni	
23	Screw, OM4X18, Ni	
24	Spacer, fiber, thickness 3mm	
25	Washer, phone jack	6003 0250
26	Screw, BM3X6	
27	Pin, hinge	6004 9590
28	Pad, arm rest	6038 0461
29	Plate, strip, module number	6036 1431
30	Screw, FM3X5	
31	Panel, front	6036 1441
32	Screw, BSBM4X8	
33	" , BSAM3X8	
34	" . BM3X25	
35	Washer, I.D. 3mm, thickness 0.5mm	

PARTS LIST
Model 5A Audio Mixer
Main frame
REV. _____

Ref. No.	Description	Parts No.
36	Bumper, rubber	5028 3830
37	Washer, I.D. 3mm, thickness 0.8mm	
38	Nut, hex, M3	
39	(deleted)	
40	Board, side dress (left)	6038 2651-01
41	Panel, side (left)	6036 1472
42	Supper, meter panel (left)	6037 2111-01
43	(deleted)	
44	Panel ass'y, meter mtg.	6085 2360
45	Screw, BM3X6	
46	Board, base	6038 2661
47	(deleted)	
J15	Jack, phone, 3-conductor	5043 2980
T 1	Transformer, power, 117V	6046 0422
"	" , " , 117/220 240V	6046 1481
"	" , " , 100V	6046 0521

PARTS LIST
Model 5A Audio Mixer
Main frame
REV. _____

8.2 REAR PANEL ASSEMBLY (Model 5 only)

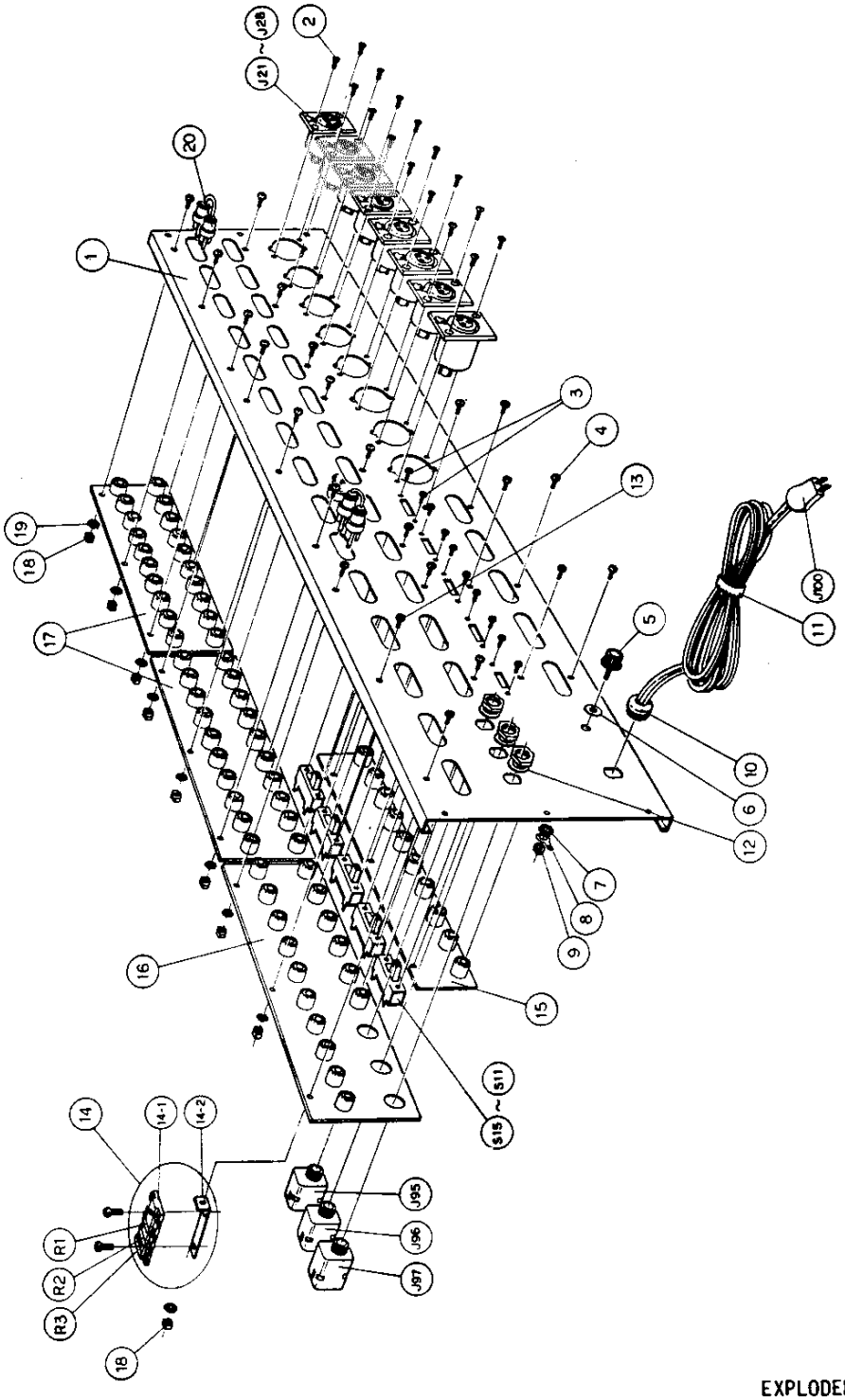

EXPLODED VIEW
Rear panel assembly
REV. _____

Title	Rear Panel Assembly	Assembly No.6085 2350
Ref. No.	Description	Parts No.
1	Panel, rear	6036 1481
2	Screw, Taptite, flat head, M3X6, Ni	
3	" , BM2.6X4, Ni. black	
4	" , BM3X8, Ni. black	
5	Terminal, grounding	5045 4071
6	Washer, I.D. M4	
7	" , lock, external teeth, I.D. M4	
8	Lug, soldering, I.D. M4	
9	Nut, hex, M4	
10	Bushing, strain relief, power cord	5027 6810
11	Belt tie, power cord	5027 1770
12	Washer, phone jack	6003 0250
13	Screw, BM3X12	
14	Resistor assembly	6085 2340
14-1	Strip, terminal	6053 0120
14-2	Angle, "L", mounting	
15	Strip, jack (C), RCA phono, J85~J94	6052 1481
16	" , " , " " , J69~J84	6052 1472
17	" , " , " " , J31~J48, J49~J68	6052 1461
18	Nut, hex, M3	
19	Washer, lock, external teeth, I.D.3mm	
20	Cable, strapping	6049 0520
J21~28	Connector, Cannon XLR3-31	6052 1490
J95, 97	Jack, std. phone, 3-conductor type	5043 2980
J96	" , " , 2-conductor type	5043 2970
J100	Plug, AC; w/power cord	5047 1661
S11~14	Switch, slide, SSB-022, L=6mm	6051 6040
S15	" , " , SSB-042, L=6mm	5044 4100
R 1	Resistor, carbon, 22Ω, 1/2W, ±5%	
R 2	" , " , " , " , "	
R 3	" , " , 12KΩ, 1/4W, ±5%	

PARTS LIST
Rear Panel Ass'y
REV. ____

8.2A REAR PANEL ASSEMBLY (Model 5A only)

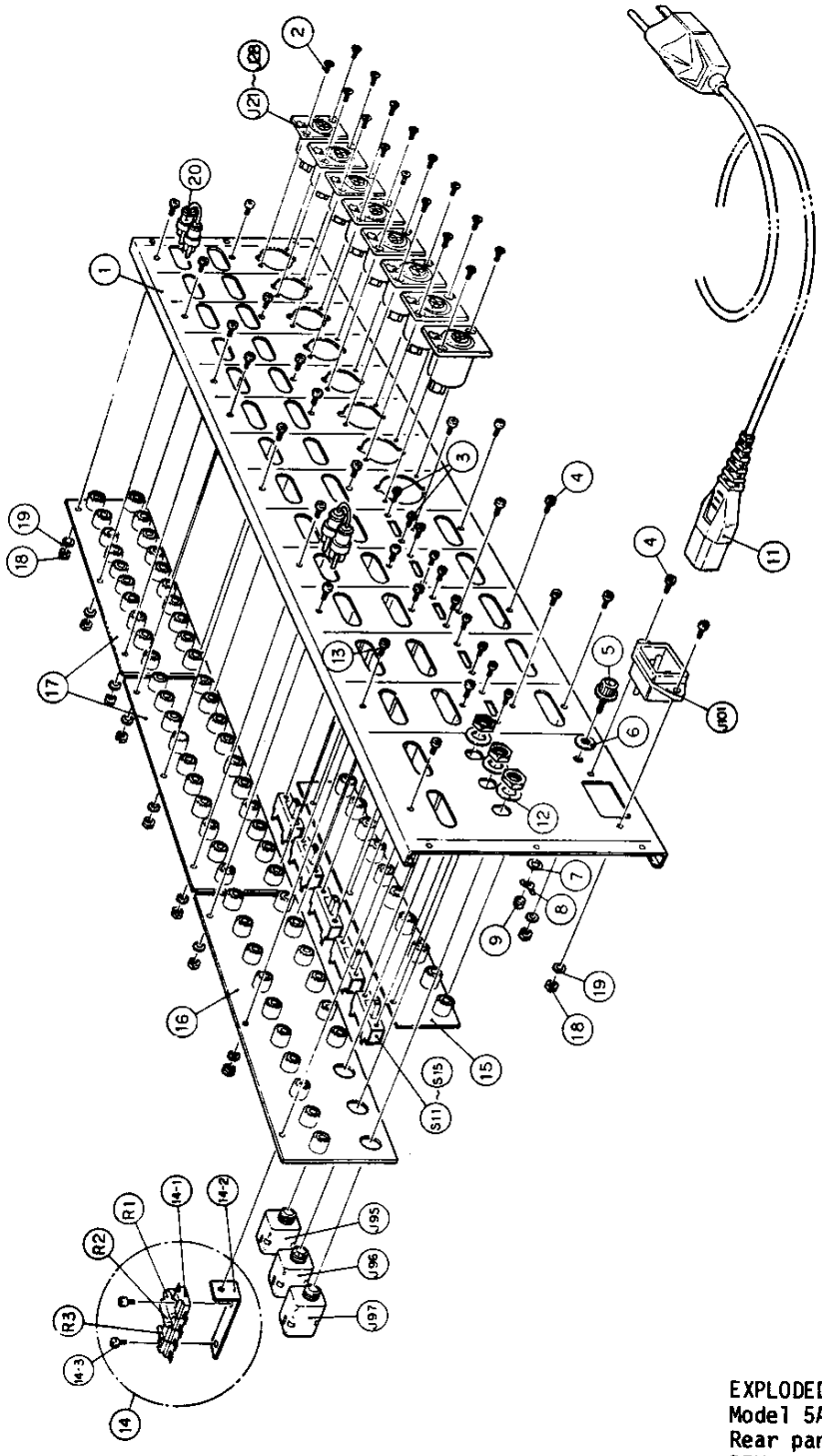

EXPLODED VIEW
Model 5A Audio Mixer
Rear panel assembly
REV. ____

Title	Rear Panel Assembly	Assembly No. 6085 2351
Ref. No.	Description	Parts No.
1	Panel, rear	6036 2120
2	Screw, Taptite, flat head, M3X6, Ni	
3	" , BM2.6X4, Ni, black	
4	" , BM3X8. Ni, black	
5	Terminal, grounding	5045 4071
6	Washer, I.D. M4	
7	" , lock, external teeth, I.D. M4	
8	Lug, soldering, I.D. M4	
9	Nut, hex, M4	
10	(deleted)	
11	Cord, AC power, (UL, CSA)	6049 0570
	" , " , (CEE)	6049 1360
	" , " , (BS)	6049 1370
	" , " , (SAA)	6049 1270
12	Washer, phone jack	6003 0250
13	Screw, BM3X12	
14	Resistor assembly	6085 2340
14-1	Strip, terminal	6053 0120
14-2	Angle, "L", mounting	
14-3	Screw, BM3X8	
15	Strip, jack (C), RCA phono, J85~J94	6052 1481
16	" , " , " " , J69~J84	6052 1472
17	" , " , " " , J31~J48, J49~J68	6052 1461
18	Nut, hex, M3	
19	Washer, lock, external teeth, I.D. 3mm	
20	Cable, strapping	
J21~28	Connector, Cannon XLR3-31	6052 1490
J95, 97	Jack, std. phone, 3-conductor type	5043 2980
J96	" , " , 2-conductor type	5043 2970
J101	Receptacle, 3P, AC (UL, CSA)	6052 2150
S11~14	Switch, slide, SSB-022, L=6mm	6051 6040
S15	" , " , SSB-042, L=6mm	5044 4100
R 1	Resistor, carbon, 22Ω, 1/2W, ±5%	
R 2	" , " , " , " , "	
R 3	" , " , 12KΩ, 1/4W, ±5%	

PARTS LIST
Model 5A Audio Mixer
Rear panel assembly
REV. _____

8.3 CONNECTOR BOARD ASSEMBLY (Model 5 only)

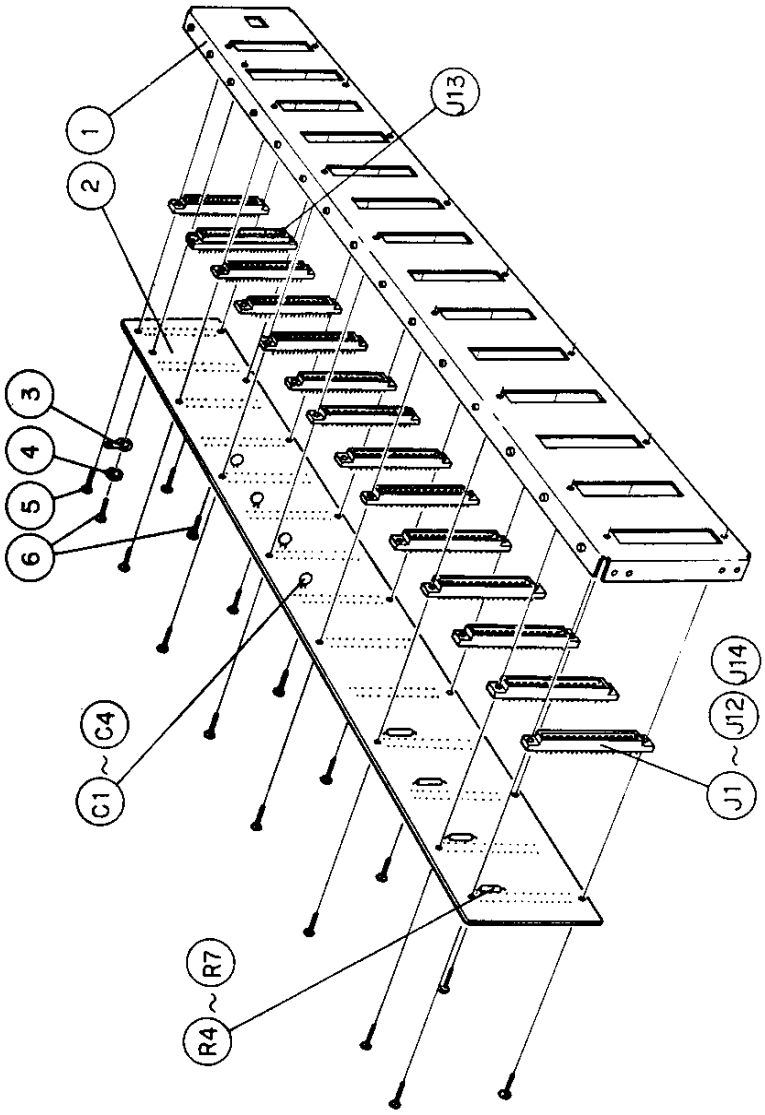

EXPLODED VIEW
Connector board assembly
REV. _____

Title	Connector Board Assembly	Assembly No. 6085 2330
Ref. No.	Description	Parts No.
1	Panel ass'y, connector mtg.	6037 2061
2	PCB ass'y, mother board (w/connector)	6085 2320
2-1	PCB, mother board	6050 2492
2-C1~4	Capacitor, ceramic, 50V, 0.01uF, FCK-D-05-103Z	6044 0050
2-R4~7	Resistor, carbon, 110KΩ, 1/4W	
J1~12 & 14	Connector, PCB, M44-14-10-149M	6052 1530
J13	" , PCN5-45ST-1.27DS	6062 1450
3	Lug, soldering, I.D. M3	
4	Washer, lock external teeth, I.D. M3	
5	Screw, BM3X6, Ni	
6	" , Taptite, Ni, P=0.5mm	

PARTS LIST
Connector Board Ass'y
REV. _____

8.3A CONNECTOR BOARD ASSEMBLY (Model 5A only)

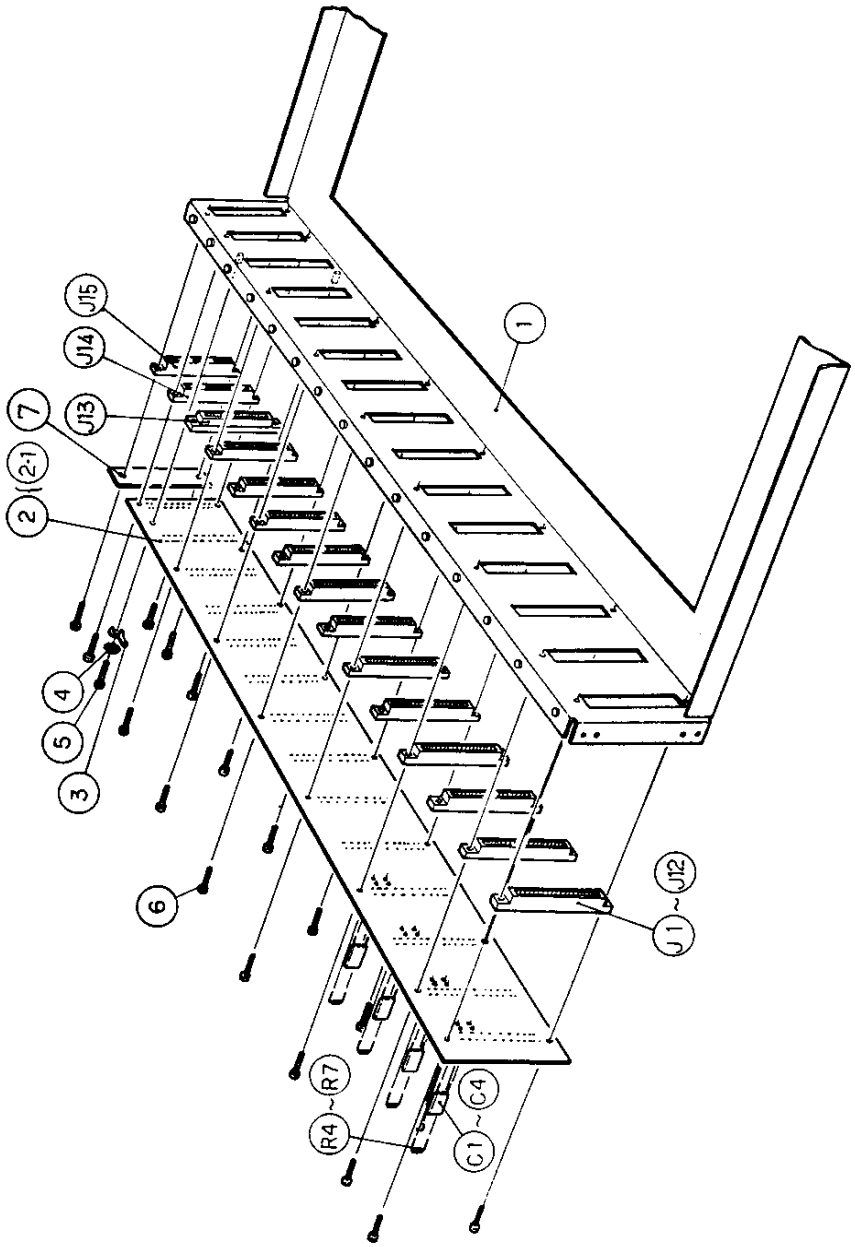

EXPLODED VIEW
Model 5A Audio Mixer
Connector board ass'y
REV. _____

Title	Connector Board Assembly	
Ref. No.	Description	Parts No.
1	Frame, main	6037 3530
2	PCB ass'y, mother board (w/connectors)	6085 2320
2-1	PCB, mother board	6050 2492
2-C1∿4	Capacitor, ceramic, 50V, 0.01uF, FCK-D-05-103Z	6044 0050
2-R4∿7	Resistor, carbon, 110KΩ, 1/4W	
J1∿12 & 14, 15	Connector, PCB, M44-14-10-149M	6052 1530
J13	" , PCN5-45ST-1.27DS	6062 1450
3	Lug, soldering, I.D. M3	
4	Washer, lock, external teeth, I.D. M3	
5	Screw, BM3X6, Ni	
6	" , BTBM3X12	
7	PCB, power supply mother board	6050 3660

PARTS LIST
Model 5A Audio Mixer
Connector board ass'y
REV. ____

8.4 METER PANEL ASSEMBLY (Model 5 only)

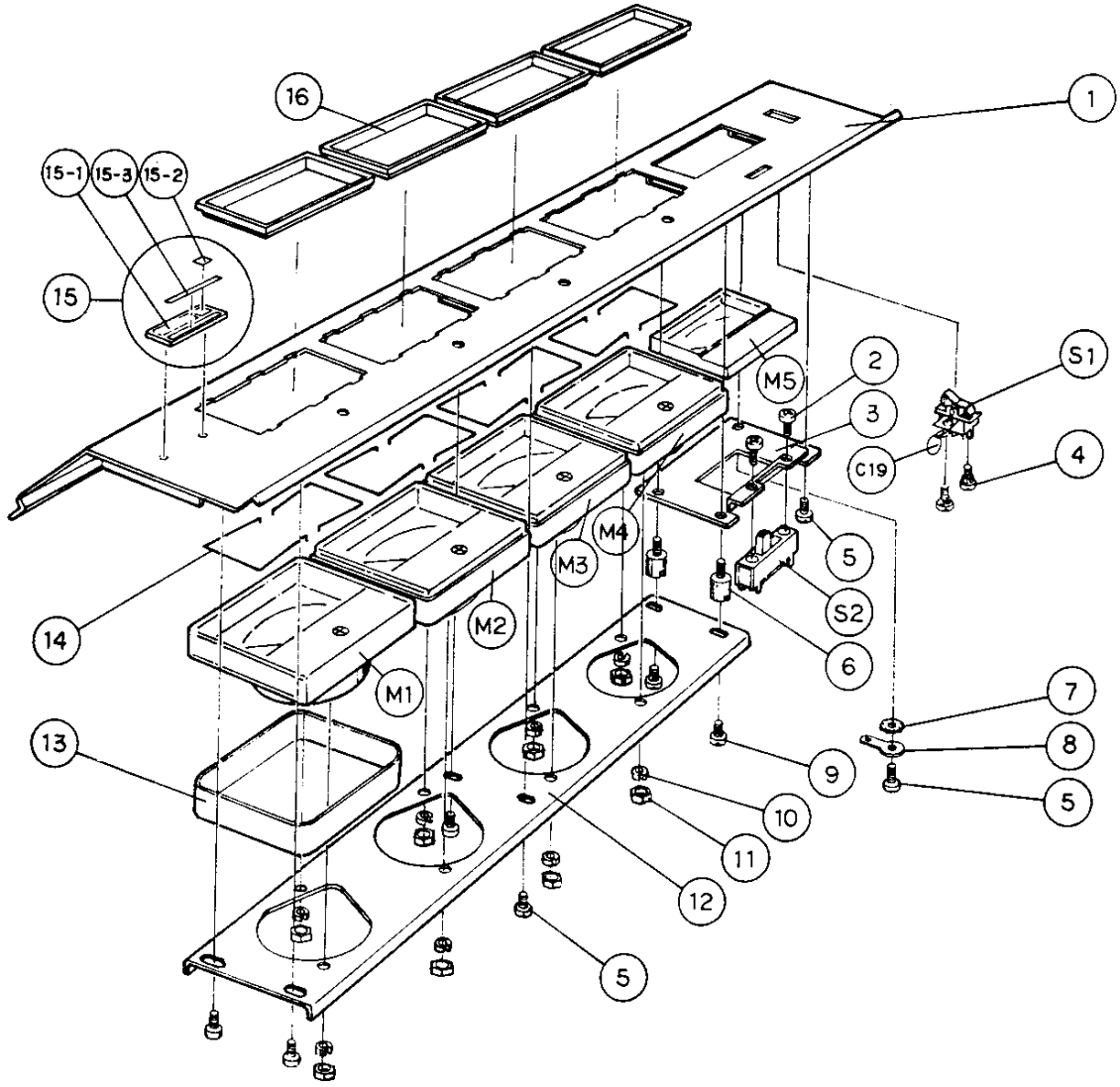

EXPLODED VIEW
Meter panel assembly
REV. _____

Title	Meter Panel Assembly	Assembly No. 6085 2360
Ref. No.	Description	Parts No.
1	Panel, meter	6036 1451
2	Screw, BM2.6X4, Ni	
3	Bracket, indicator (VU) mounting	6037 2030
4	Screw, BSAM3X6	
5	" , BM3X6, Chromate	
6	Spacer, tapped, indicator mounting	6004 9580
7	Washer, LWE3	
8	Lug, soldering, I.D. M3	
9	Screw, BM3X4, Chromate	
10	Washer, SW3	
11	Nut, hex, N3	
12	Plate, meter mounting	6037 2080
13	Rubber band, meter light shield	5093 9110
14	Spring clip, meter escutcheon mounting	6004 0340
15	Name plate ass'y, Model 5	6007 1140
15-1	Plate, TEAC name	6007 1110
15-2	" , Model 5	6007 1100
15-3	" , Series classification	6007 1120
16	Escutcheon, meter	5023 6500
C19	Sparkiller (0.033uF + 120Ω)	5052 9060
D1~4	LED, GD4-203SRG	5042 5110
M1~4	Meter, VU	6055 0180
M5	Indicator, VU	5058 1460
S1	Switch, AC power	6051 8010
S2	" , slide	6051 6010

PARTS LIST
Meter Panel Ass'y
REV. _____

8.4A **METER PANEL ASSEMBLY** (Model 5A only)

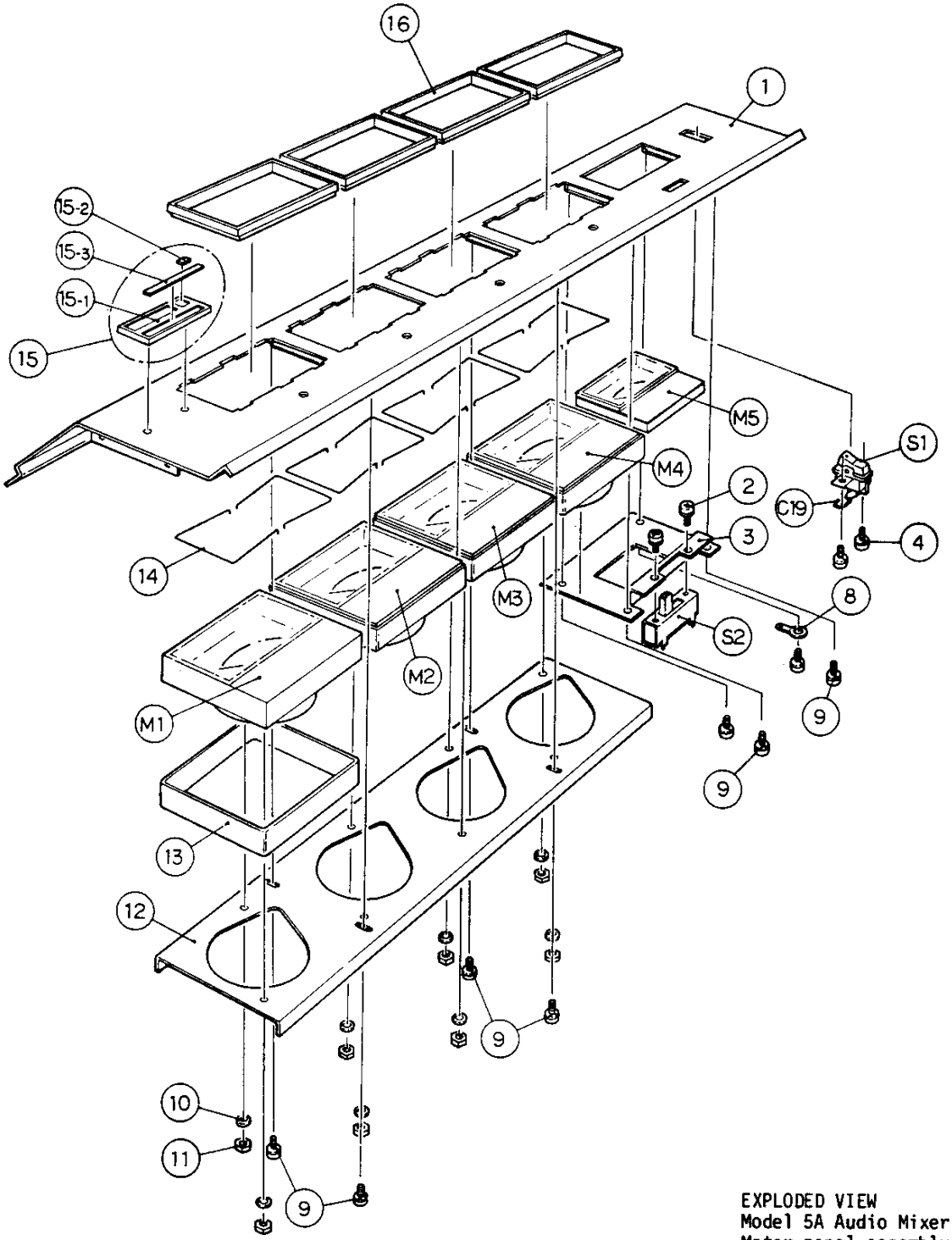

EXPLODED VIEW
Model 5A Audio Mixer
Meter panel assembly
REV. _____

Title	Meter Panel Assembly	Assembly No. 6085 2361
Ref. No.	Description	Parts No.
1	Panel, meter	6036 1452
2	Screw, BM2.6X4, Ni	
3	Bracket, indicator (VU) mounting	6037 2030
4	Screw, BSAM3X6	
5	(deleted)	
6	(deleted)	
7	(deleted)	
8	Lug, soldering, I.D. M3	
9	Screw, BSAM3X6	
10	Washer, SW3	
11	Nut, hex, N3	
12	Plate, meter mounting	6037 2081
13	Rubber band, meter light shield	5093 9110
14	Spring clip, meter escutcheon mounting	6004 0340
15	Name plate ass'y, Model 5	6007 1140
15-1	Plate, TEAC name	6007 1110
15-2	" , Model 5	6007 1100
15-3	" , Series classification	6007 1120
16	Escutcheon, meter	5023 6500
C19	Sparkiller (0.033uF + 120Ω), UL, CSA	5052 9060
	" (0.047uF, 250V, 50Hz), CEE, BS, SAA	5189 0010
D1~4	LED, GH4-203SRG	5042 5110
M1~4	Meter, VU	6055 0180
M5	Indicator, VU	5058 1460
S1	Switch, AC power	6051 8010
S2	" , slide	6051 6010

PARTS LIST
Model 5A Audio Mixer
Meter panel assembly
REV. ____

8.5 POWER SUPPLY **UNIT (Model** 5 only, see page 52 for Model 5A)

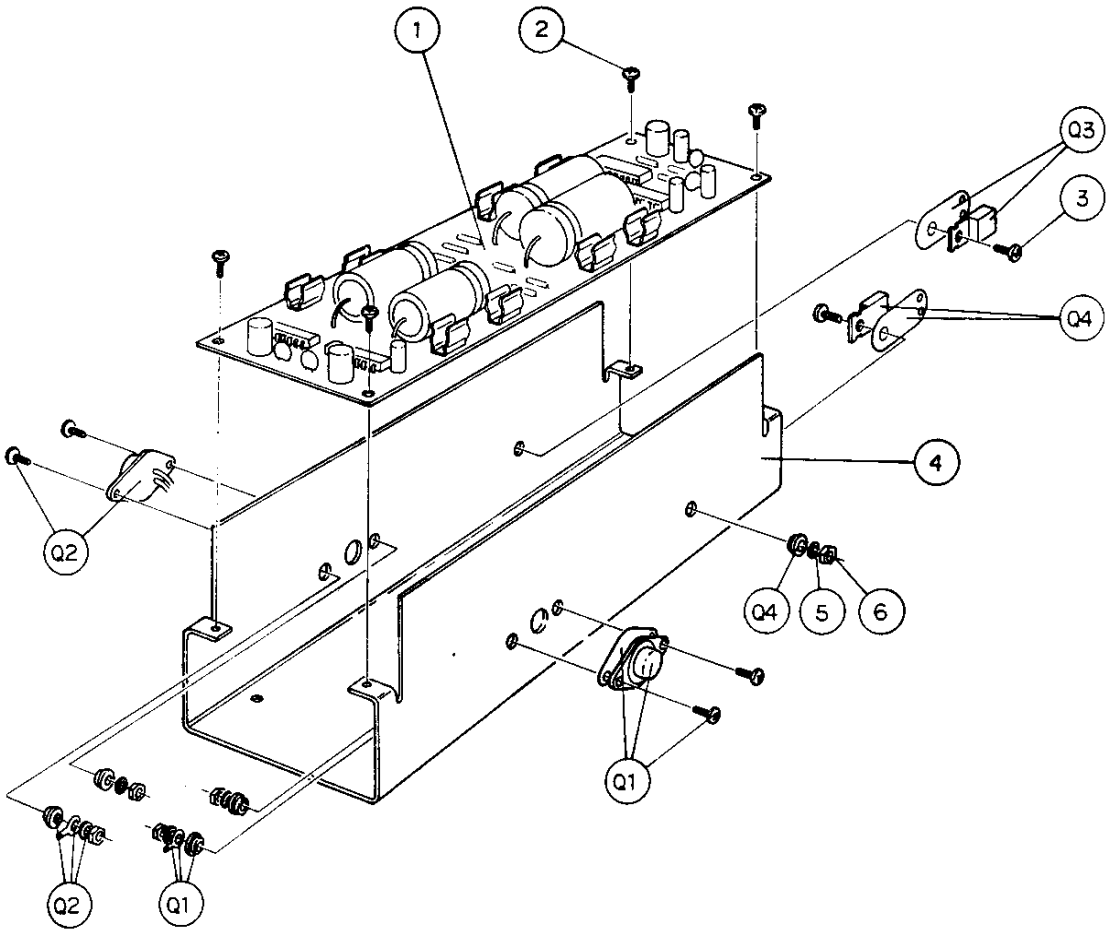

EXPLODED VIEW
Power supply unit
REV. _____

Title	Power Supply Unit	Unit No. 6085 2120
Ref. No.	Description	Parts No.
1	PCB ass'y, power supply (See P. 57 for components)	6085 2110
2	Screw, BM3X4, Ni	
3	Screw, BM3X8, Ni	
4	Sink, heat	6037 1992
5	Washer, flat, I.D. 3mm	
6	Nut, hex, M3	
Q1 & 2	Transistor, 2SD-130-Y	5042 4360
Q3	" , 2SD-235-0	6048 0380
Q4	" , 2SB-435-0	6048 0660

PARTS LIST
Power Supply Unit
REV. 1

8.6 MODEL 201 INPUT MODULE (for both Model 5 and 5A)

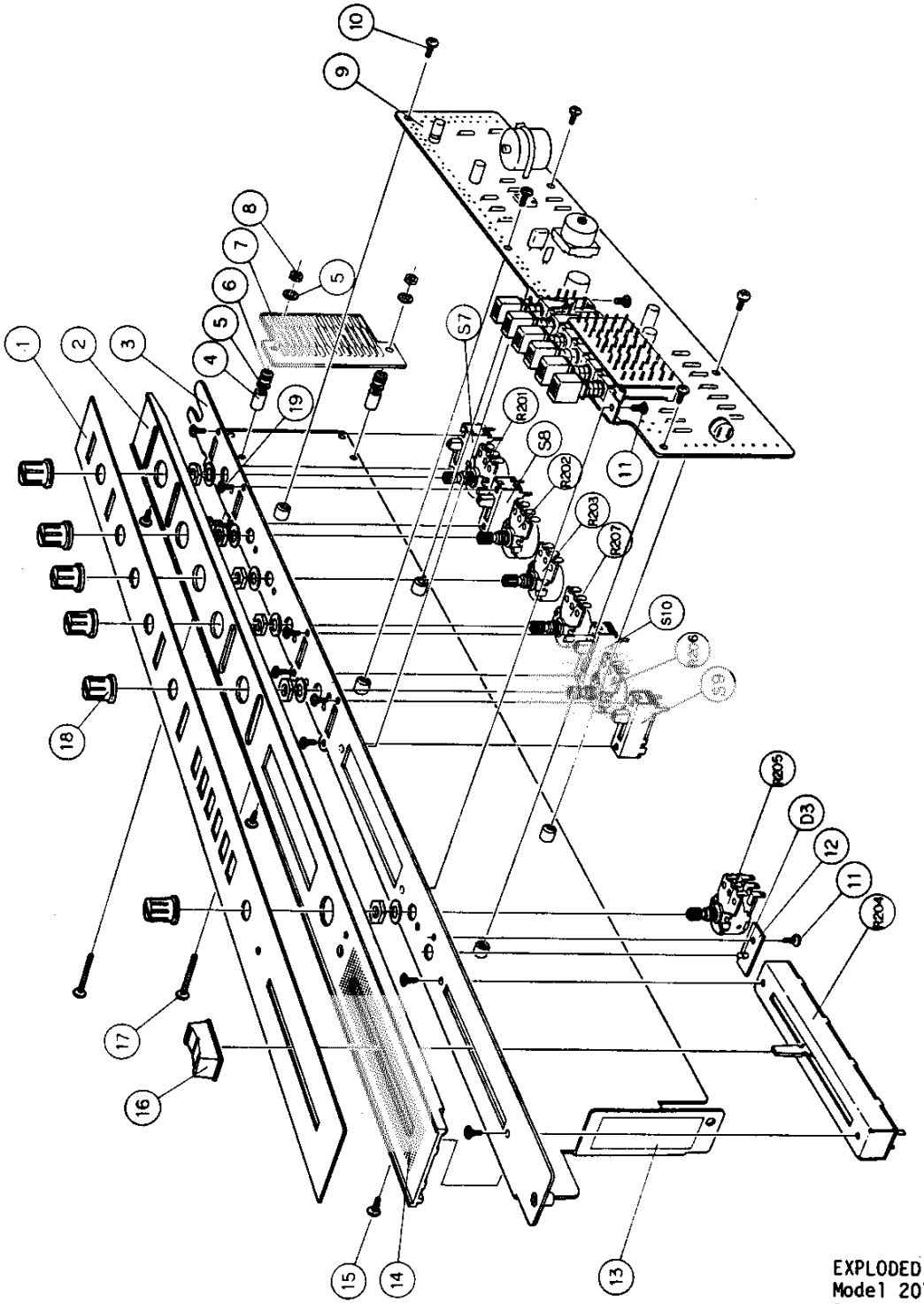

EXPLODED VIEW
Model 201
Input Module
REV. _____

Title	Model 201 Input Module	Assembly No. 6085 2040
Ref. No.	Description	Parts No.
1	Panel, dress, input module	6036 1420
2	Frame, panel	6037 1931
3	Plate, base, module assembly	6037 1990
4	Spacer, tubular, 3.2X6X9mm	6004 8090
5	Washer, flat, I.D. WM3, t=0.3mm	
6	Cushion, rubber	5027 0160
7	Connector, PCB (A)	6050 2511
8	Nut, hex, M3	
9	PCB ass'y, Input amplifier (See P. 60 for components)	6085 2030
10	Screw, BM3X4, Ni	
11	" , BM2X4, Ni	
12	PCB, LED mount	6050 2530
13	Plate, name, module	6007 1040
14	Mesh, dust, fader	6053 0140
15	Screw, Taptite, M3X6, Chromate, P=0.5mm	
16	Knob, fader	6006 0170
17	Screw, BM3X20, Ni	
18	Knob, control, B-15S	6006 0161
19	Screw, BM2.6X4, Ni	
D3	LED, TLR-102	6048 3310
S7~10	Switch, slide, SSB-023	6051 6020
R201	Potentiometer, rotary, 20KΩ, taper C	6042 0680
R202	" , " , 5KΩ, taper A	6042 0690
R203	" , " , " , "	" "
R204	" , linear, 10KΩ, "	6041 2060
R205	" , rotary, left hand log 5KΩ + right hand log 5KΩ	6042 0730
R206	" , " , 10KΩ, taper "S"	6042 0700
R207	" , " , " , "	" "

PARTS LIST
Model 201
Input Module
REV. 1

8.7 MODEL 202 SUBMASTER MODULE (for both Model 5 and 5A)

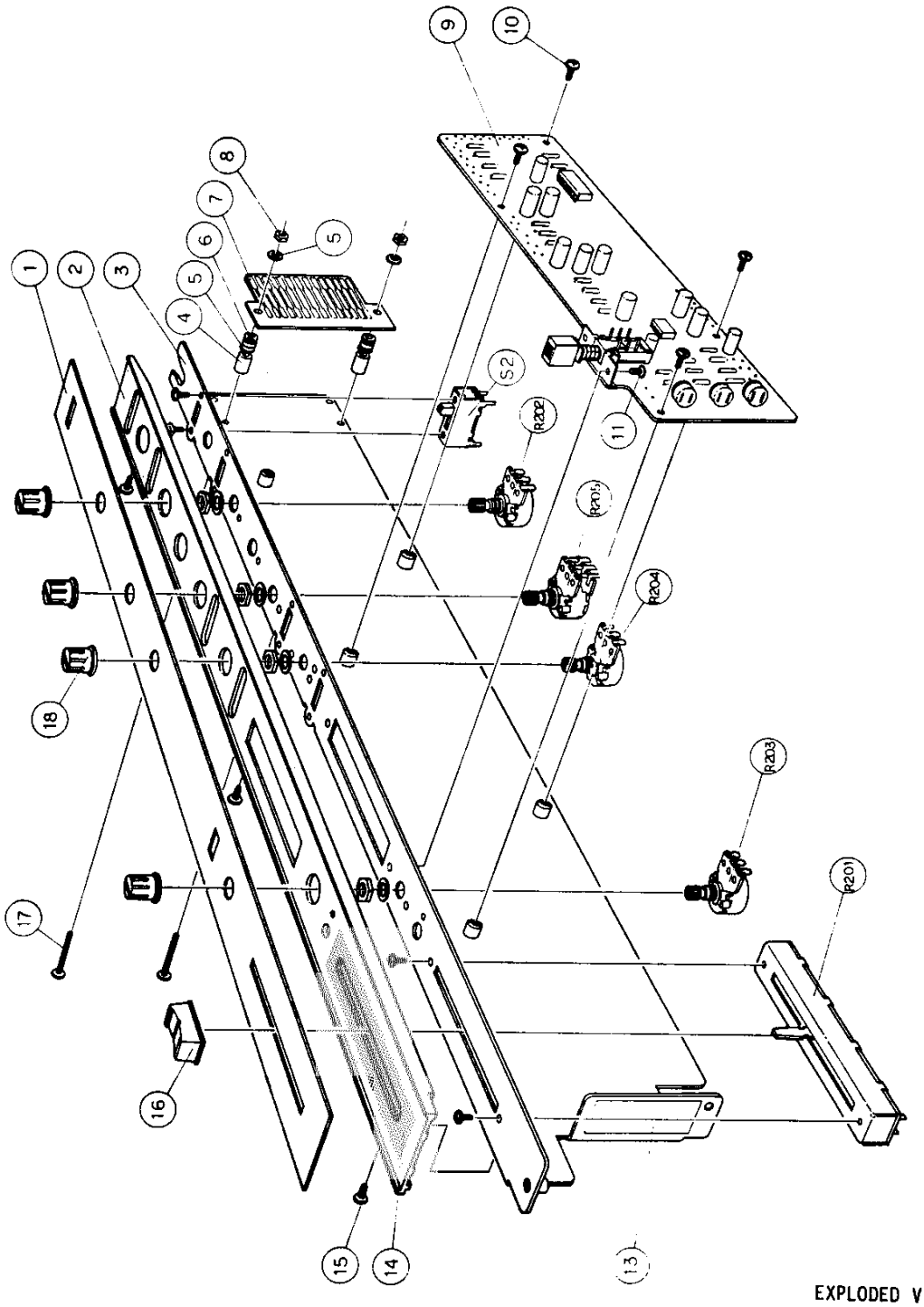

EXPLODED VIEW
Model 202
Submaster Module
REV. _____

Title	Model 202 Submaster Module	Assembly No. 6085 2060
Ref. No.	Description	Parts No.
1	Panel, dress, submaster module	6036 1400
2	Frame, panel	6037 1931
3	Plate, base, module assembly	7037 1990
4	Sapcer, tubular, 3.2X6X9mm	6004 8090
5	Washer, flat, I.D. WM3, t=0.3mm	
6	Cushion, rubber	5027 0160
7	Connector, PCB (A)	6050 2511
8	Nut, hex, M3	
9	PCB ass'y, Submaster amplifier (See P. 63 for components)	6085 2050
10	Screw, BM3X4, Ni	
11	" , BM2X4, Ni	
12	(deleted)	
13	(")	
14	Mesh, dust, fader	6053 0140
15	Screw, Taptite, M3X6, Chromate, P=0.5mm	
16	Knob, fader	6006 0170
17	Screw, BM3X20, Ni	
18	Knob, rotary pot, B-15S	6006 0161
19	Screw, BM2.6X4, Ni	
S2	Switch, slide, SSB-023	6051 6020
R201	Potentiometer, linear, single, 10KΩ, taper A	6041 2060
R202	" , rotary, " , 20KΩ, "	6042 0760
R203	" , " , " , 50KΩ, "	6042 0720
R204	" , " , " , 10KΩ, "	6042 0710
R205	" , " , dual, 5KΩ, taper AC	6042 0730

PARTS LIST
Model 202
Submaster Module
REV. 1

8.8 MODEL 203 MASTER/MONITOR MODULE (Model 5 only)

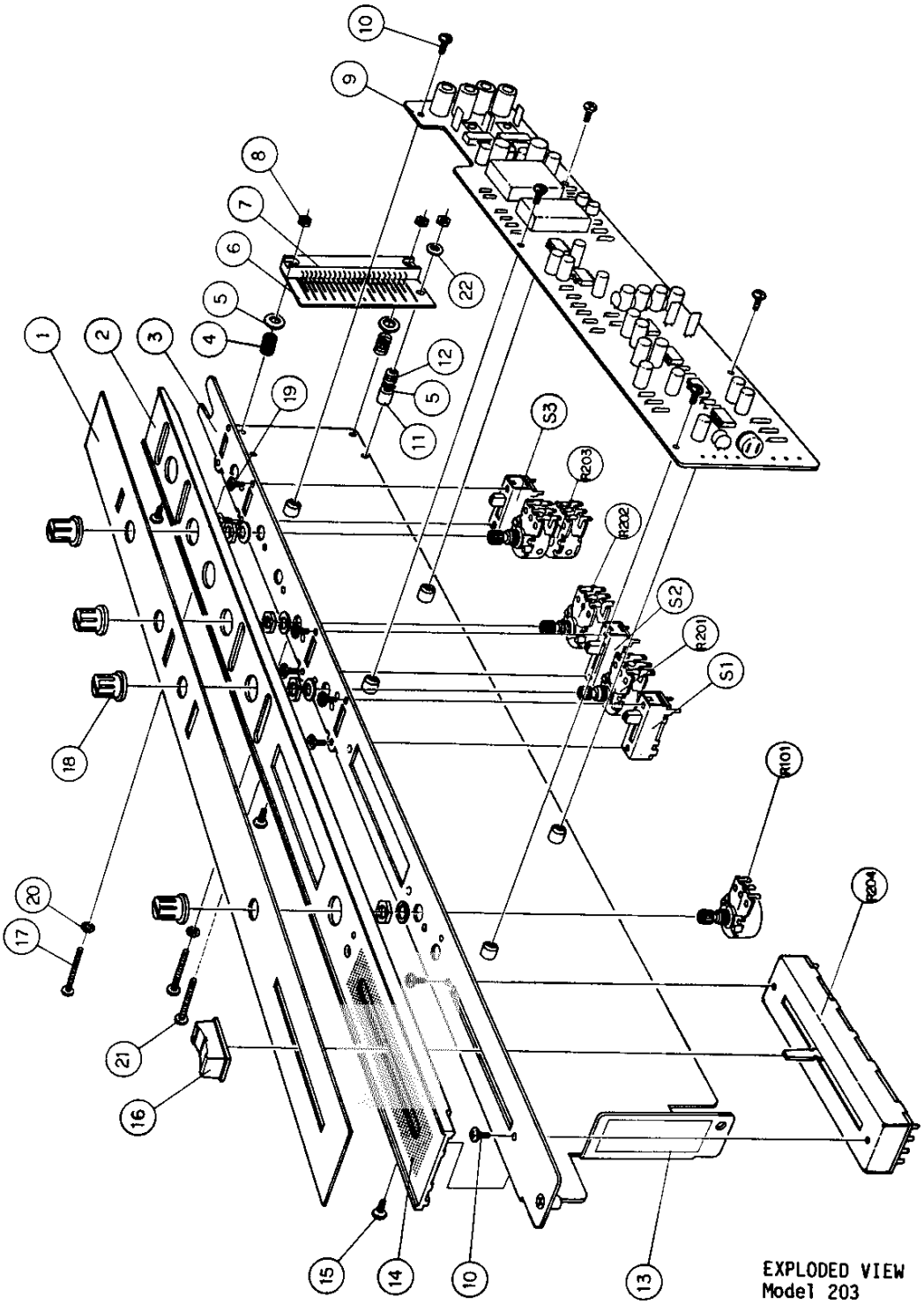

EXPLODED VIEW
Model 203
Master/Monitor Module
REV. _____

Title	Model 203 Master/Monitor Module	Assembly No. 6085 5280
Ref. No.	Description	Parts No.
1	Panel, dress, master/monitor module	6036 1390
2	Frame, panel	6037 1931
3	Plate, base, module assembly	6037 1990
4	Spring, connector shock mount	6004 0330
5	Washer, flat, WM3	
6	PCB, connector (B)	6050 2521
7	Connector, rectangular, 45-pin, Hirose	6052 1440
8	Nut, hex, M3	
9	PCB ass'y, Monitor amplifier (See P. 66 for components)	6085 2071
10	Screw, BM3X4	
11	Spacer, tubular, M3.2-I.D.X6-O.D.X4	6004 8040
12	Cushion, rubber	5027 0160
13	(deleted)	
14	Mesh, dust, fader	6053 0140
15	Screw, Taptite, M3X6, Chromate, P=0.5mm	
16	Knob, fader	6006 0170
17	Screw, BM3X20, Ni	
18	Knob, rotary pot, B-15S	6006 0161
19	Screw, BM2.6X4, Ni	
20	Washer, lock, LWEM3	
21	Screw, BM3X12	
22	Washer, fiber, M3	
S1, 2	Switch, slide, SSB-023	6051 6020
S3	" , " , SSB-042	6051 6030
R101	Potentiometer, rotary, single, 5KΩ, taper A	6042 0690
R201	" , " , " , 50KΩ, "	6042 1740
R202	" , " , " , " , "	" "
R203	" , " , " , 10KΩ, "	6042 0750
R204	" , linear, 4-gang, " , "	6041 2070

PARTS LIST
Model 203
Master/Monitor Module
REV. 1

8.8A MODEL 203A MASTER/MONITOR MODULE (Model 5A only)

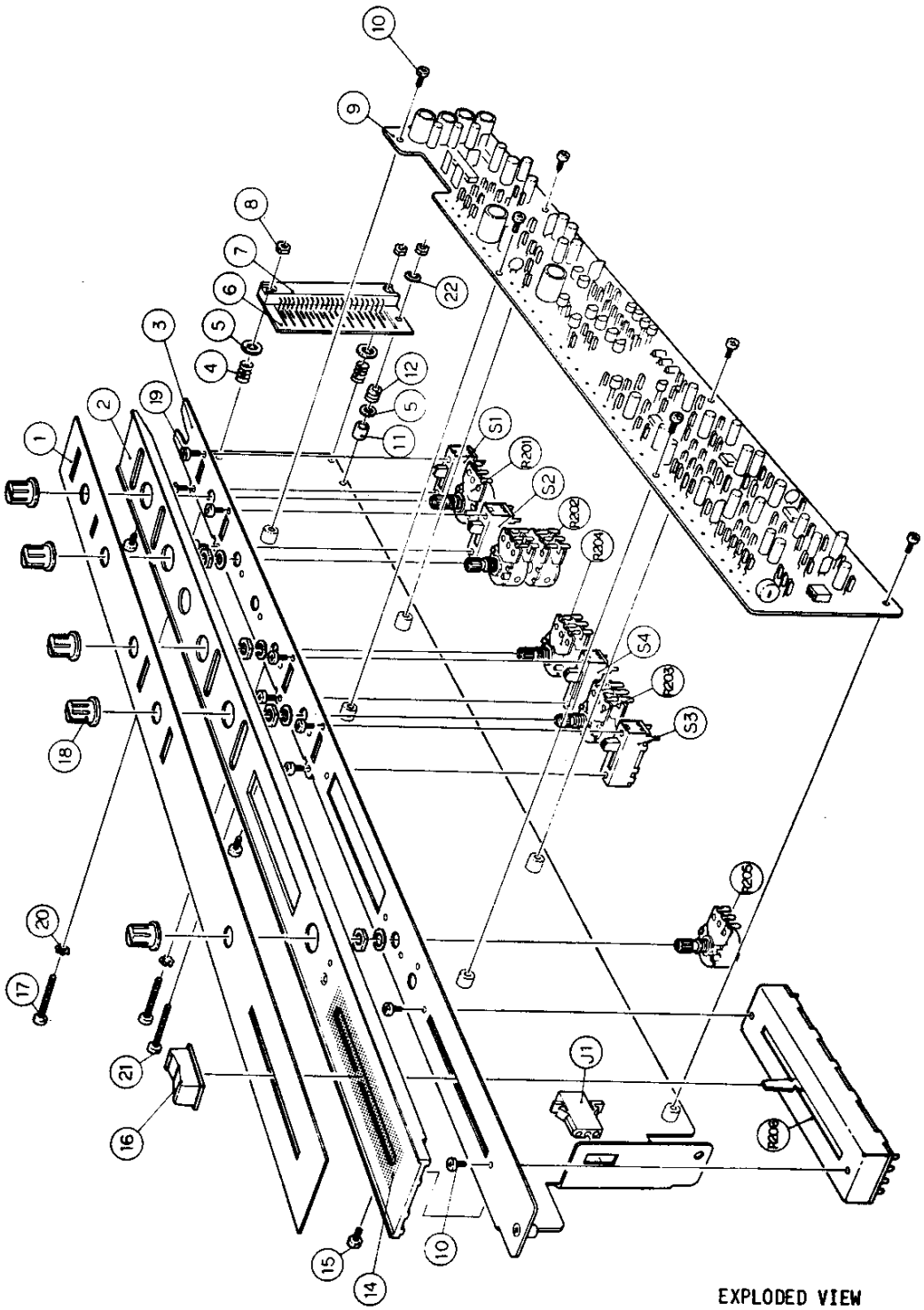

EXPLODED VIEW
Model 203A
Master/monitor module
REV. ____

Title	Model 203A Master/Monitor Module	Assembly No. 6085 3320
Ref. No.	Description	Parts No.
1	Panel, dress, master/monitor module	6036 1991
2	Frame, panel	6037 1932
3	Plate, base, module assembly	6037 3670
4	Spring, connector shock mount	6004 0330
5	Washer, flat, WM3	
6	PCB, connector (B)	6050 2521
7	Connector, rectangular, 45-pin, Hirose	6052 1440
8	Nut, hex, M3	
9	PCB ass'y, monitor amplifier (see p.71 for components)	6085 3330
10	Screw, BM3X4	
11	Spacer, tubular, M3.2-I.D.X6- O.D.X4	6004 8040
12	Cushion, rubber	5027 0160
13	(deleted)	
14	Mesh, dust, fader	6053 0140
15	Screw, Taptite, M3X6, Chromate, P=0.5mm	
16	Knob, fader	6006 0170
17	Screw, BM3X20, Ni	
18	Knob, rotary pot, B-15S	6006 0160
19	Screw, BM2.6X4, Ni	
20	Washer, lock, LWEM3	
21	Screw, BM3X12	
22	Washer, fiber, M3	
S1, 3, 4	Switch, slide, SSB-023	6051 6020
S2	" , " , SSB-042	6051 6030
R201, 203	Potentiometer, rotary, 2-gang, 10KΩ, taper A	6042 0830
R202	" , " , 4-gang, 10KΩ, "	6042 0750
R204	" , " , 2-gang, 2KΩ, "	6042 0880
R205	" , " , single, 10KΩ, "	6042 0710
R206	" , linear, 4-gang, 10KΩ, "	6041 2070

PARTS LIST
Model 203A
Master/Monitor module
REV. _____

8.9 MODEL 204 TALKBACK MODULE (for both Model 5 and 5A)

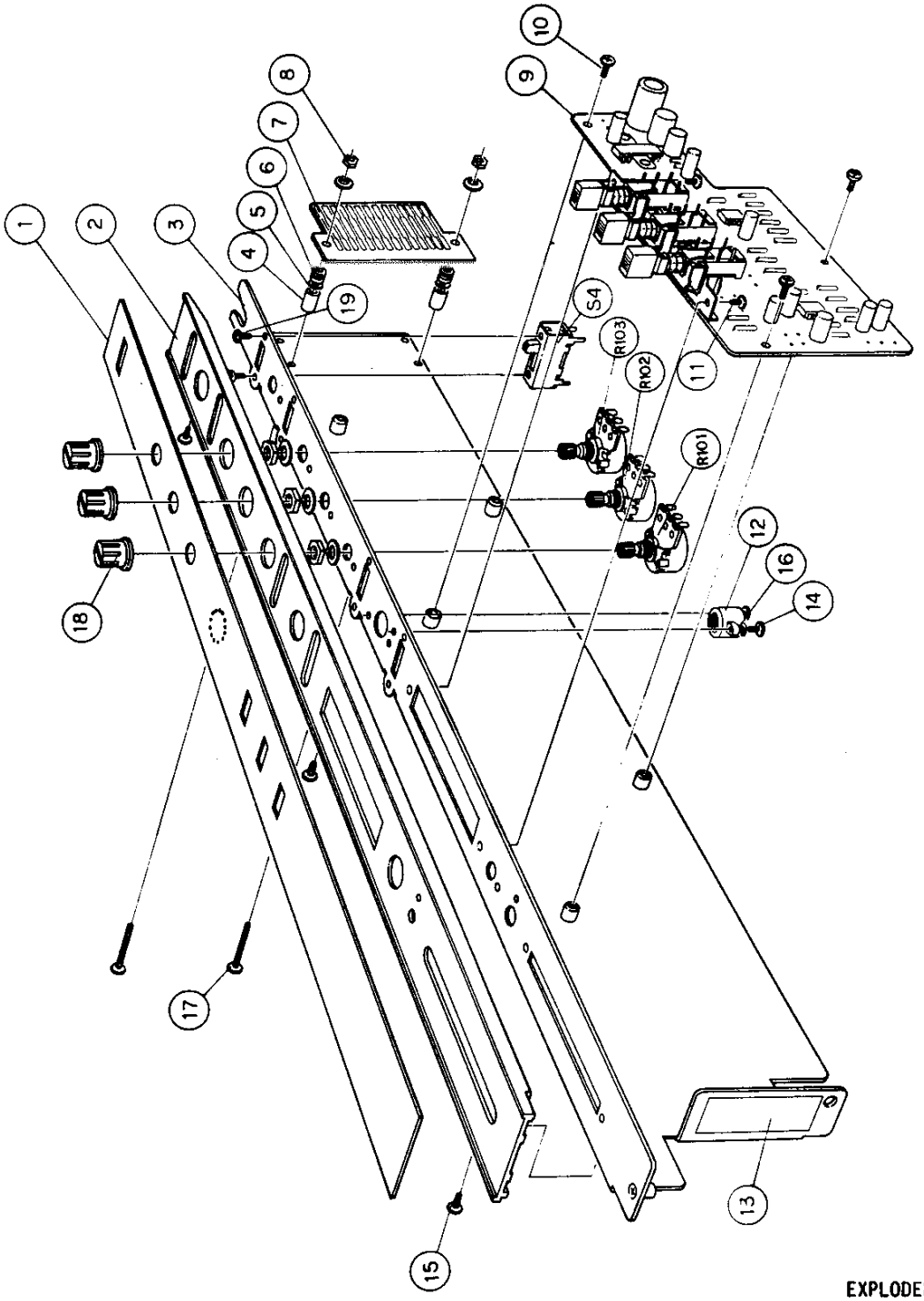

EXPLODED VIEW
Model 204
Talkback Module
REV. _____

Title	Model 204 Talkback Module	Assembly No. 6085 2100
Ref. No.	Description	Parts No.
1	Panel, dress, talkback module	6036 1410
2	Frame, panel	6037 1931
3	Plate, base, talkback module assembly	6037 1960
4	Spacer, tubular, M3.2-I.D.X6-O.D.X9	6004 8090
5	Washer, flat, M3	
6	Cushion, rubber	5027 0160
7	PCB, connector (B)	6050 2511
8	Nut, hex, M3	
9	PCB ass'y, Talkback amplifier (See P. 81 for components)	6085 2090
10	Screw, BM3X4, Ni	
11	" , BM2X4, Ni	
12	Cartridge, mic, electret condenser, EM-10BP	6055 0170
13	(deleted)	
14	Screw, BM2X6	
15	" , Taptite, M3X6, Chromate, P=0.5mm	
16	Washer, flat, M2	
17	Screw, BM3X20, Ni	
18	Knob, rotary pot, B-15S	6006 0161
19	Screw, BM2.6X4, Ni	
S4	Switch, slide, SSB-042	6051 6030
R101∿103	Potentiometer, rotary single, 10KΩ, taper A	6042 0710

PARTS LIST
Model 204
Talkback Module
REV. 1

8.10 Power Supply Module

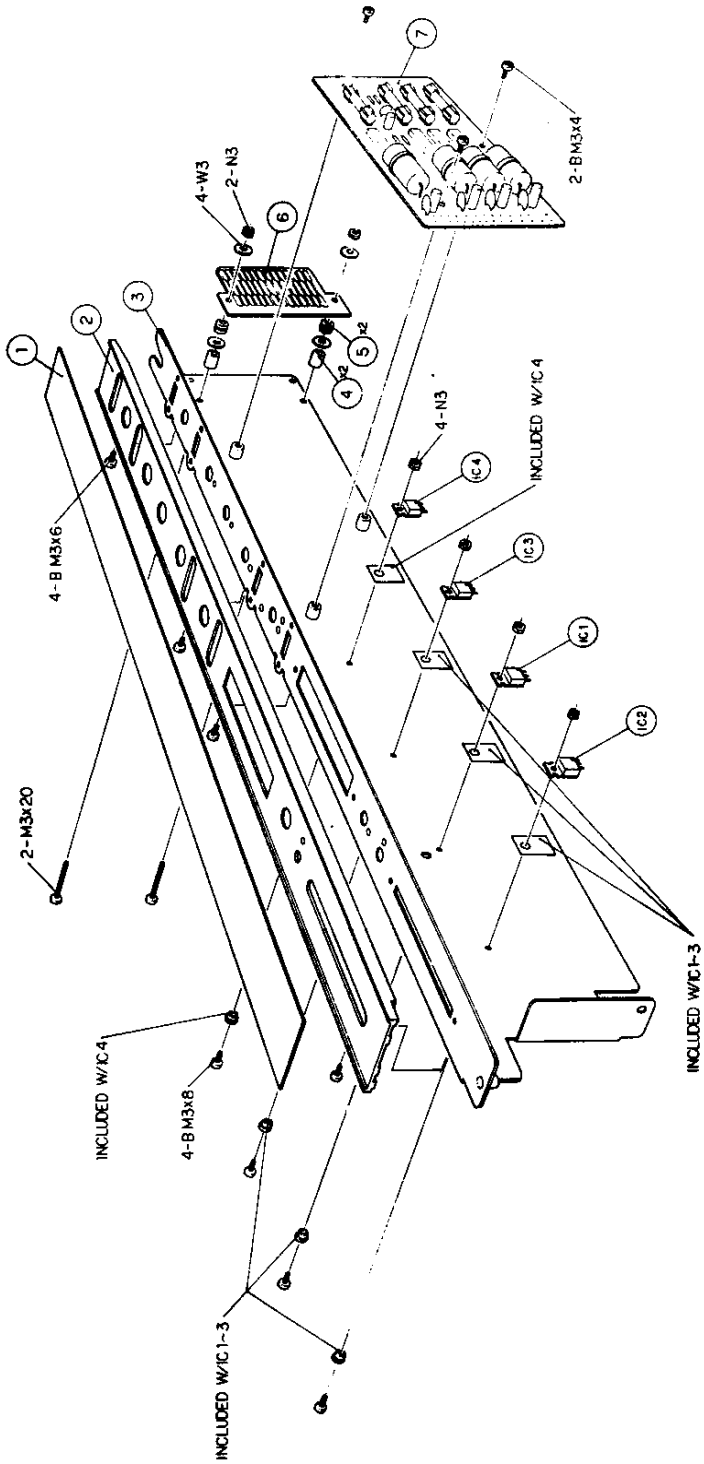

EXPLODED VIEW
Model 5A Audio Mixer
Power supply module
REV. _____

Title	Power Supply Module	Assembly No. 6085 3140
Ref. No.	Description	Parts No.
1	Panel, dress, blank module	6036 1380
2	Frame, panel	6037 1392
3	Plate, base, module assembly	6037 3520
4	Spacer, tubular, 3.2 X 6 X 9mm	6004 8090
5	Cushion, rubber	5027 0160
6	Connector, PCB (A)	6050 2511
7	PCB assembly, power supply (UL/CSA)	6085 3150-00
	" , " (CEE/BS/SAA)	6085 3150-01
	" , " (DM)	6085 3150-02

PARTS LIST
Model 5A Audio Mixer
Power supply module
REV. _____

8.11 BLANK MODULE ASSEMBLY (for both Model 5 and 5A)

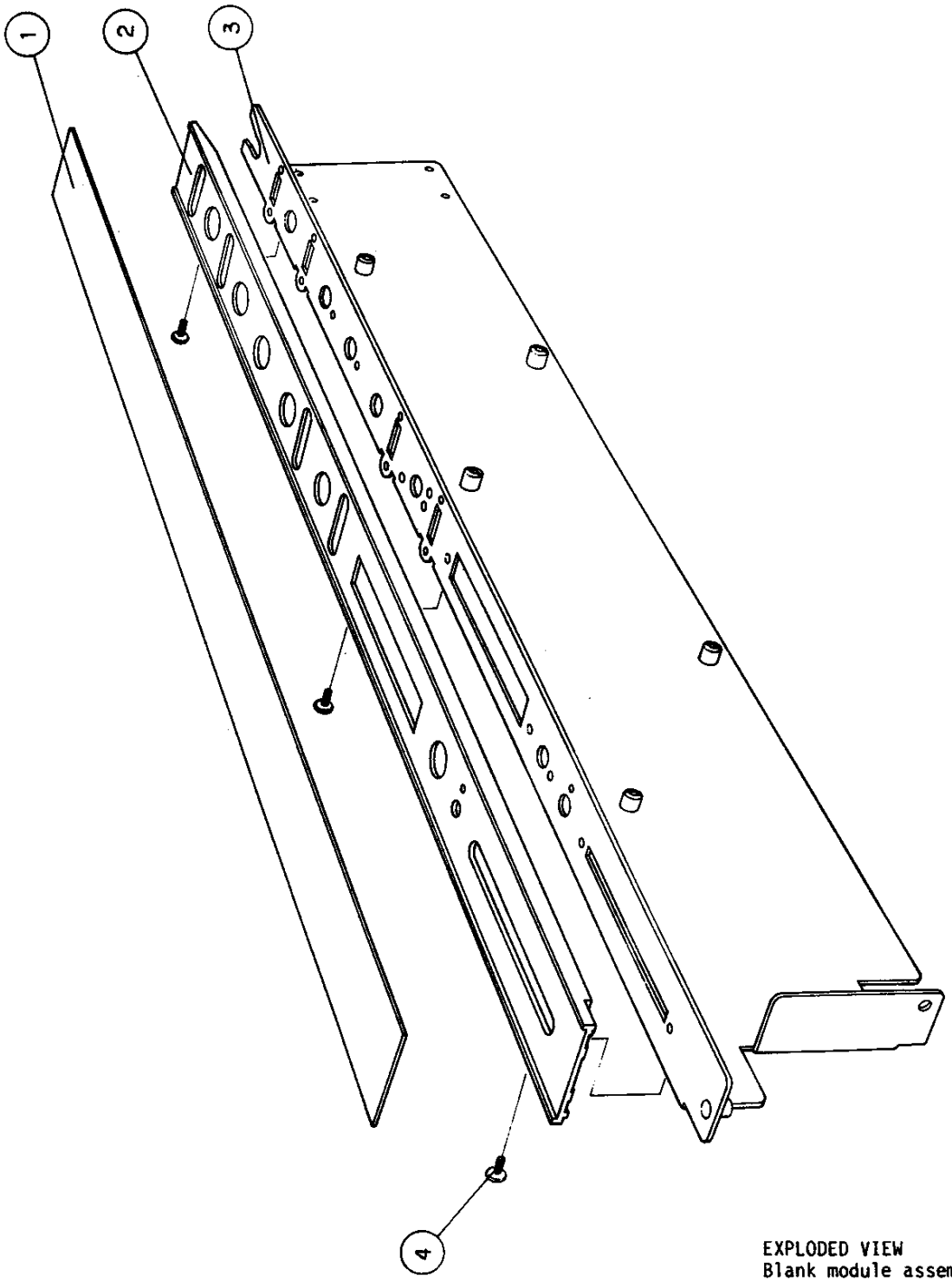

EXPLODED VIEW
Blank module assembly
REV. _____

Title	Blank Module Assembly	Assembly No. 6085 2020
Ref. No.	Description	Parts No.
1	Panel, dress, blank module	6036 1380
2	Frame, panel	6037 1931
3	Plate, base, blank module	6037 1950
4	Screw, Taptite, M3X6, Chromate, P=0.5mm	

PARTS LIST
Blank Module Assembly
REV. _____

9. PCB ASSEMBLIES AND PARTS LIST

9.1 Power supply PCB assembly (Model 5 only)

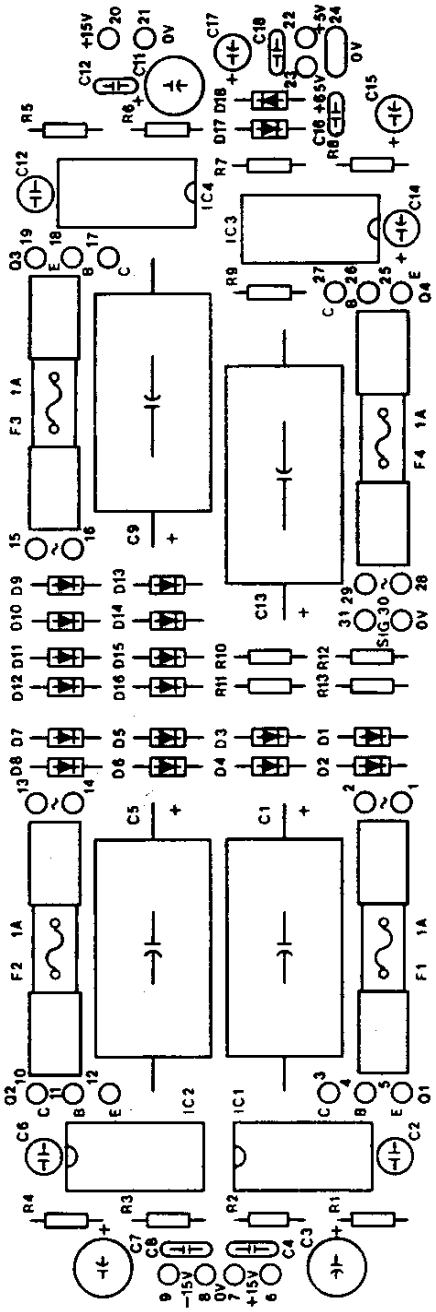

LOCATION OF COMPONENTS
Power supply PCB
REV. _____

Title	Power Supply PCB Assembly	Assembly No. 6085 2110
Ref. No.	Description	Parts No.
	PCB, power supply	6050 2501
IC1~4	Integrated circuit, uA-723-PC	6048 6060
D1~18	Diode, IN-400-Z	6048 3270
	Holder, fuse, S-N 5051	6052 9010
F1~4	Fuse, glass, tubular, 1A	5041 1010
R 1	Resistor, carbon, 7.5KΩ	
R 2	" , " , 6.8KΩ	
R 3	" , " , 7.5KΩ	
R 4	" , " , 6.8KΩ	
R 5	" , " , 7.5KΩ	
R 6	" , " , 6.8KΩ	
R 7	" , " , 680Ω	
R 8	" , " , 6.8KΩ	
R 9	" , " , 56Ω	
R10	" , " , 10KΩ	
R11	" , " , "	
R12	" , " , 15KΩ	
R13	" , " , 1.5KΩ	
C 1	Capacitor, electrolytic, 35V, 470uF	5055 5150
C 2	" , Polystyrene, 50V, 470pF	6043 5260
C 3	" , electrolytic, 25V, 22uF	5055 4900
C 4	" , ceramic, 50V, 0.01uF	6044 0050
C 5	" , electrolytic, 35V, 470uF	5055 5150
C 6	" , Polystyrene, 50V, 470pF	6043 5260
C 7	" , electrolytic, 25V, 22uF	5055 4900
C 8	" , ceramic, 50V, 0.01uF	6044 0050
C 9	" , electrolytic, 35V, 470uF	5055 5150
C10	" , Polystyrene, 50V, 470pF	6043 5260
C11	" , electrolytic, 25V, 22uF	5055 4900
C12	" , ceramic, 50V, 0.01uF	6044 0050
C13	" , electrolytic, 25V, 1000uF	5055 5140

All resistors, 1/4W, ±5% unless otherwise specified.

PARTS LIST
Pwr sup. PCB ass'y
REV. _____

Ref. No.	Description	Parts No.
C14	Capacitor, electrolytic, 25V, 1uF	5055 4670
C15	" , " , 10V, 22uF	6043 0160
C16	" , ceramic, 50V, 0.01uF	6044 0050
C17	" , electrolytic, 10V, 22uF	6043 0160
C18	" , ceramic, 50V, 0.01uF	6044 0050

PARTS LIST
Pwr sup. PCB ass'y
REV. _____

9.1A Power Supply PCB Assembly (Model 5A only)

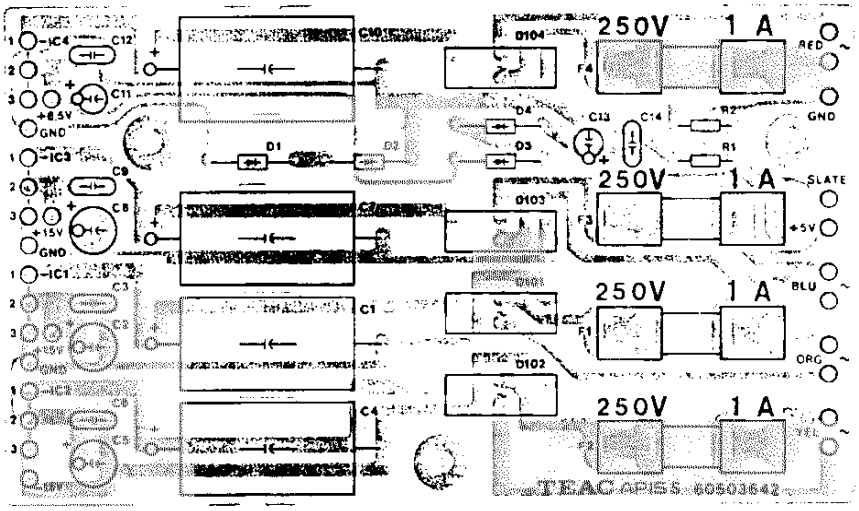

LOCATION OF COMPONENTS
Model 5A Audio Mixer
Power supply PCB Ass'y
REV. _____

Title	Power Supply PCB Assembly	Assembly No. 6085 3150
Ref. No.	Description	Parts No.
	PCB, power supply	6050 3642
D1-4	Diode, IN-4002	6048 3270
D101-104	Diode stack, SIRB A-20	6048 3440
F1-4	Fuse, glass, tubular, 1A 250V (UL/CSA)	5041 1450
	" , " , " , 1A 250V (CEE/BS/SAA)	5041 1410
	" , " , " , 1A 250V (DM)	5041 1010
	Holder, fuse SN-5054	6052 9020
R1	Resistor, carbon, 1.5Kohm	
R2	" , " , 15Kohm	
C1,4,7	Capacitor, electrolytic, 35V, 470uF	5055 5150
C10	" , " , 25V, 1000uF	5055 5140
C2,5,8	" , " , 25V, 22uF	5055 4900
C11,13	" , " , 10V, 22uF	6043 0160
C3,6,9, 12,14	" , ceramic, 50V, 0.01uF	6044 0050

All resistors ¼W, ±5% unless otherwise specified.

PARTS LIST
Model 5A Audio Mixer
Power supply PCB ass'y
REV. _____

9.2 Input amplifier PCB assembly (for both Model 5 and 5A)

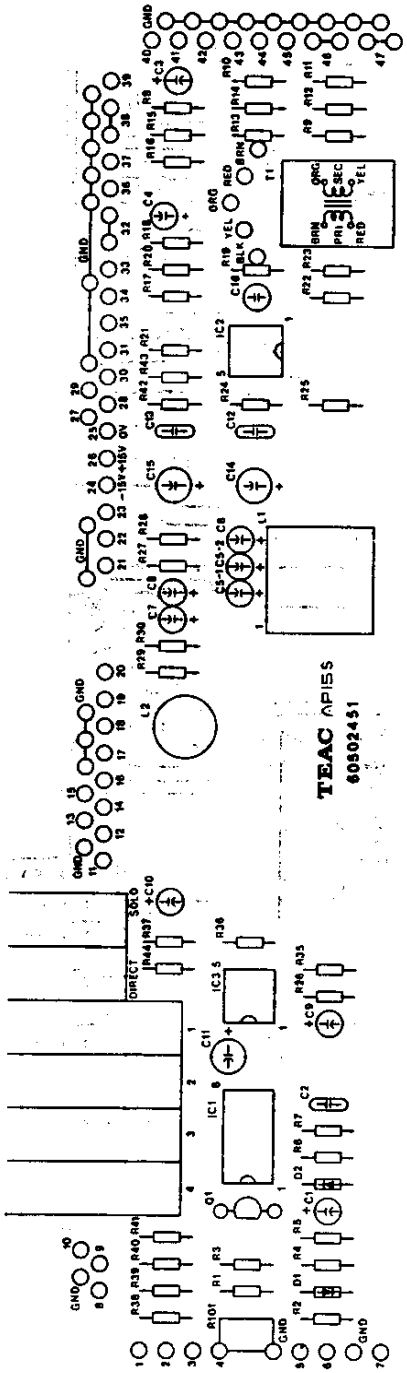

LOCATION OF COMPONENTS
Input amplifier PCB
REV. _____

Title	Input Amplifier PCB Assembly	Assembly No. 6085 2030
Ref. No.	Description	Parts No.
	PCB, input amplifier	6050 2451
	PCB, push switch	6050 0083
IC1	Integrated circuit, SN-7400	6048 9000
IC2, 3	" " , RC-4558-DN	6048 6070
Q1	Transistor, 2SC-1312-YG	6048 0450
D1, 2	Diode, 1S953	5042 2720
T1	Transformer, mic	6046 5071
	Tie, cable harness, SKB-2M	6049 9080-03
L1	Inductor (A), equalizer	6046 6230
L2	" (B), "	6046 6240
S1~6	Switch (A), push	6051 0531
R 1	Resistor, carbon, 27KΩ	
R 2	" , " , 2.7KΩ	
R 3	" , " , 2.2KΩ	
R 4	" , " , 47KΩ	
R 5	" , " , 1KΩ	
R 6	" , " , 470Ω	
R 7	" , " , 270Ω	
R 8	" , " , 56KΩ	
R 9	" , " , 6.2KΩ	
R10	" , " , 3.6KΩ	
R11	" , " , 680Ω	
R12	" , " , "	
R13	" , " , 180Ω	
R14	" , " , 15Ω	
R15	" , " , 12KΩ	
R16	" , " , 100KΩ	
R17	" , " , 470KΩ	
R18	" , " , 27KΩ	
R19	" , " , 33KΩ	
R20	" , " , 820Ω	

All resistors 1/4W, ±5% unless otherwise specified.

PARTS LIST
Input amplifier PCB ass'y
REV. _____

Ref. No.	Description	Parts No.
R21	Resistor, carbon, 1KΩ	
R22	" , " , 47KΩ	
R23	" , " , 1.2KΩ	
R24	" , " , 3.6KΩ	
R25	" , " , 2.7KΩ	
R26	" , " , "	
R27	" , " , 390Ω	
R28	" , " , 270Ω	
R29	" , " , 470Ω	
R30	" , " , 430Ω	
R31∿34	(deleted)	
R35	" , " , 47KΩ	
R36	" , " , "	
R37∿43	" , " , 12KΩ	
R44	" , " , 100KΩ	
R101	Potentiometer, trimmer, SR29R, 4.7KΩ	5053 3930
C 1	Capacitor, electrolytic, 25V, 4.7uF	5055 4530
C 2	" , ceramic, 50V, 0.01uF	6044 0050
C 3	" , electrolytic, 25V, 4.7uF	5055 4530
C 4	" , " , 10V, 22uF	6043 0160
C 5-1	" , tantalum, 16V, 1uF	6043 1800
C 5-2	" , " , " , 0.22uF	6043 1810
C 6	" , " , " , 3.3uF	6043 1820
C 7	" , Mylar, 50V, 0.027uF	6044 7350
C 8	" , " , " , 0.082uF	6044 7380
C 9	" , electrolytic, 10V, 22uF	6043 0160
C10	" , " , 25V, 4.7uF	5055 4530
C11	" , " , 10V, 47uF	6043 0180
C12	" , ceramic, 50V, 0.01uF	6044 0050
C13	" , " , " , "	" "
C14	" , electrolytic, 25V, 10uF	5055 4040
C15	" , " , " , "	" "
C16	" , Polystyrene, 50V, 100pF	6043 5220

All resistors 1/W, ±5% unless otherwise specified.

PARTS LIST
Input amplifier PCB ass'y
REV. _____

9.3 Submaster amplifier PCB assembly (for both Model 5 and 5A)

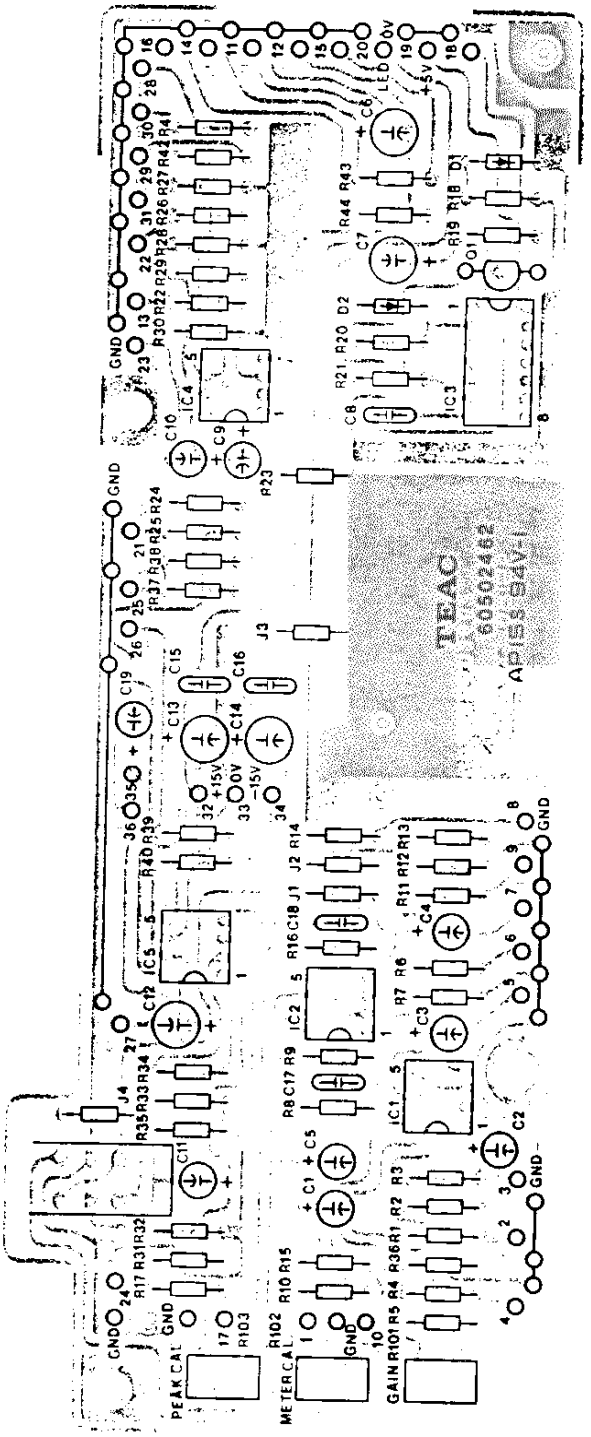

LOCATION OF COMPONENTS
Submaster amplifier PCB
REV. _____

Title	Submaster Amplifier PCB Assembly	Assembly No.6085 2050
Ref. No.	Description	Parts No.
	PCB, Submaster amplifier	6050 2462
IC1	Integrated circuit, RC-4558-DN	6048 6070
IC2	" " , SN-7400	6048 9000
IC3~5	" " , RC-4558-DN	6048 6070
Q1	Transistor, 2SC-1312-YG	6048 0450
D1, 2	Diode, 1S953	5042 2720
S1	Switch, push (B)	6051 0540
R101	Potentiometer, trimmer, SR29R, 220KΩ	6041 0110
R102	" , " , " , 4.7KΩ	5053 3930
R103	" , " , " , 10KΩ	5053 3910
R 1	Resistor, carbon, 12KΩ	
R 2	" , " , 100KΩ	
R 3	" , " , 12KΩ	
R 4	" , " , 47KΩ	
R 5	" , " , 68KΩ	
R 6	" , " , 1KΩ	
R 7	" , " , 100KΩ	
R 8	" , " , 1.5KΩ	
R 9	" , " , 6.8KΩ	
R10	" , " , 3.3KΩ	
R11	" , " , 22KΩ	
R12	" , " , 15KΩ	
R13	" , " , 2.2KΩ	
R14	" , " , 1.5KΩ	
R15	" , " , 3.9KΩ	
R16	" , " , 15KΩ	
R17	" , " , 2.7KΩ	
R18	" , " , 47KΩ	
R19	" , " , 1KΩ	
R20	" , " , 470Ω	
R21	" , " , 270Ω	

All resistors, 1/4W, ±5% unless otherwise specified.

PARTS LIST
Submaster amplifier PCB ass'y
REV. 1

Ref. No.	Description	Parts No.
R22	Resistor, carbon, 1KΩ	
R23	" , " , 100KΩ	
R24	" , " , 10KΩ	
R25	" , " , "	
R26	" , " , 1KΩ	
R27	" , " , 100KΩ	
R28	" , " , 2.2KΩ	
R29	" , " , 33KΩ	
R30	" , " , 47KΩ	
R31	" , " , 1KΩ	
R32	" , " , 220KΩ	
R33	" , " , 2.2KΩ	
R34	" , " , 4.7KΩ	
R35	" , " , 47KΩ	
R36	" , " , 12KΩ	
R37	" , " , 10KΩ	
R38	" , " , "	
R39	" , " , 47KΩ	
R40	" , " , 220KΩ	
R41	" , " , 12KΩ	
R42	" , " , "	
R43	" , " , 22KΩ	
R44	Resistor type jumper, 0Ω	
J1~4	" " " , "	
C1~5	Capacitor, electrolytic, 10V, 22uF	6043 0160
C6, 7	" , " , 25V, 4.7uF	5055 4530
C8	" , ceramic, 50V, 0.01uF	6044 0050
C9~11	" , electrolytic, 10V, 22uF	6043 0160
C12	" , " , " , 47uF	6043 0180
C13, 14	" , " , 25V, 10uF	5055 4040
C15~18	" , ceramic, 50V, 0.01uF	6044 0050
C19	" , electrolytic, 10V, 22uF	6043 0160

All resistors, 1/4W, ±5% unless otherwise specified.

PARTS LIST
Submaster amplifier PCB ass'y
REV. _____

9.4 Monitor amplifier PCB assembly (Model 5 only)

(for units up to Serial No. 1600)

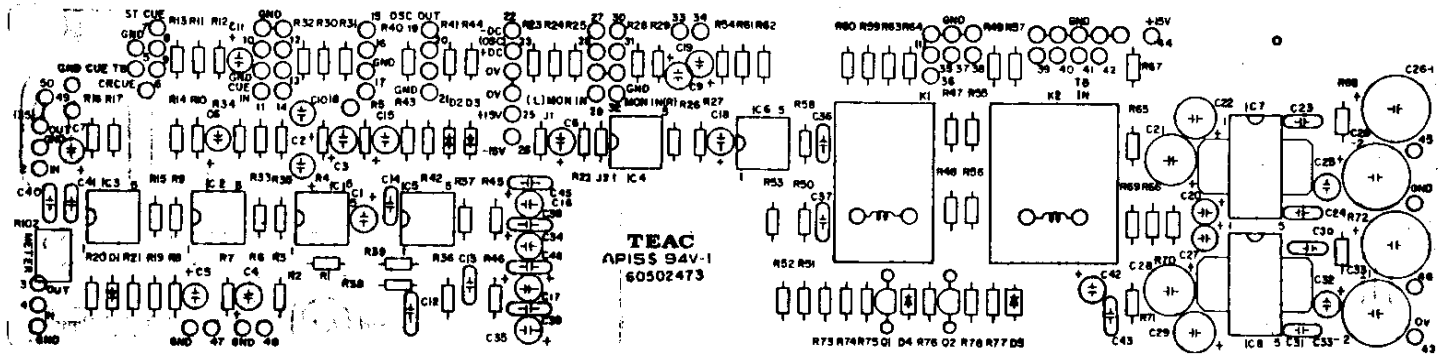

(for units with Serial No. 1601 and later)

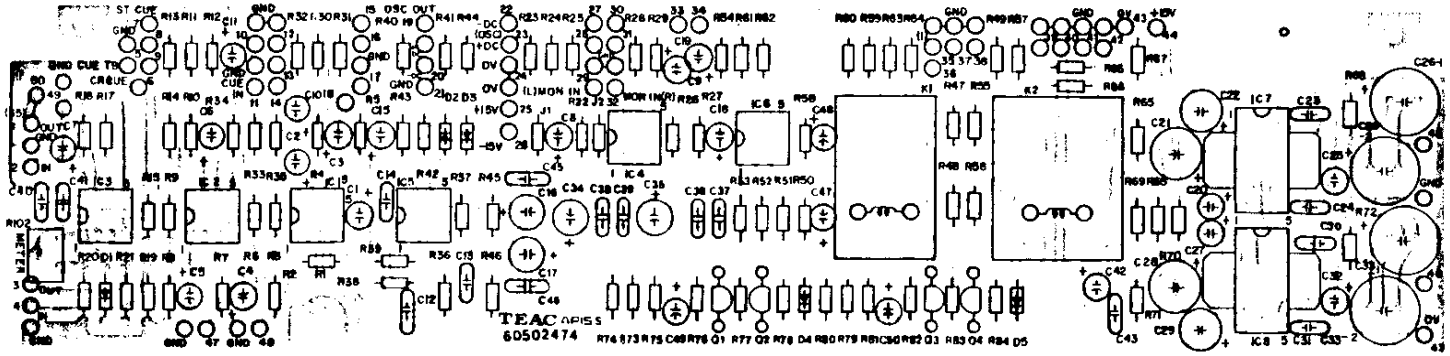

LOCATION OF COMPONENTS
Monitor amplifier PCB
REV. 1

List below to page 70 applies to units with Serial No. up to 1600.

Title	Monitor Amplifier PCB Assembly	Ass'y No. 6085 2070
Ref. No.	Description	Parts No.
	PCB, monitor amplifier	6050 2473
IC1∿6	Integrated circuit, RC-4558-DN	6048 6070
IC7, 8	" " , LA-4032-P	6048 6040
Q1, 2	Transistor, 2SA-697-D	6048 0360
D1∿3	Diode, 1S953	5042 2720
D4, 5	" , 1N4002	6048 3270
K1	Relay, LZ-2, DC 12V	6047 0310
K2	" , LZ-4, "	6047 0300
R102	Potentiometer, trimmer, SR29R, 4.7KΩ	5053 3930
J1, 2	Resistor type jumper, 0Ω	
R 1∿4	Resistor, carbon, 12KΩ	
R 5	" , " , 47KΩ	
R 6	" , " , 51KΩ	
R 7	" , " , 22KΩ	
R 8	" , " , 47KΩ	
R 9	" , " , 6.2KΩ	
R10	" , " , 15KΩ	
R11	" , " , 3.9KΩ	
R12	" , " , 2.7KΩ	
R13	" , " , 3.9KΩ	
R14	" , " , 2.7KΩ	
R15	" , " , 150Ω	
R16	" , " , 12KΩ	
R17	" , " , 47KΩ	
R18	(deleted)	
R19	" , " , 47KΩ	
R20	" , " , 270Ω	
R21	" , " , 6.8KΩ	
R22	" , " , 12KΩ	
R23	" , " , 47KΩ	
R24, 25	" , " , 150Ω	
R26	" , " , 12KΩ	

All resistors, 1/4W, ±5% unless otherwise specified.

PARTS LIST
Monitor amplifier PCB ass'y
REV. _____

Ref. No.	Description	Parts No.
R27	Resistor, carbon, 47KΩ	
R28∿30	" , " , 150Ω	
R31	" , " , 100KΩ	
R32, 33	" , " , 150Ω	
R34	" , " , 100KΩ	
R35	" , " , 150Ω	
R36, 37	" , " , 33KΩ	
R38	" , " , 36KΩ	
R39	" , " , 10KΩ	
R40	" , " , 120Ω	
R41	" , " , 15KΩ	
R42, 43	" , " , 7.5KΩ	
R44	" , " , 15KΩ	
R45, 46	" , " , 1.5KΩ	
R47, 48	" , " , 220KΩ	
R49	" , " , 22KΩ	
R50	" , " , 1KΩ	
R51	" , " , 220KΩ	
R52	" , " , 5.6KΩ	
R53	" , " , 22KΩ	
R54	" , " , 47KΩ	
R55, 56	" , " , 220KΩ	
R57	" , " , 22KΩ	
R58	" , " , 1KΩ	
R59	" , " , 220KΩ	
R60	" , " , 5.6KΩ	
R61	" , " , 22KΩ	
R62	" , " , 47KΩ	
R63, 64	" , " , 22KΩ	
R65	" , " , 47KΩ	
R66	" , " , 220KΩ	
R67	" , " , 220Ω	
R68	" , " , 1KΩ	
R69	" , " , 47KΩ	

All resistors, 1/4W, ±5% unless otherwise specified.

PARTS LIST
Monitor amplifier PCB ass'y
REV. _____

Ref. No.	Description	Parts No.
R70	Resistor, carbon, 220KΩ	
R71	" , " , 220Ω	
R72	" , " , 1KΩ	
R73	" , " , 10KΩ	
R74	" , " , 4.7KΩ	
R75	" , " , 82Ω	
R76	" , " , 10KΩ	
R77	" , " , 4.7KΩ	
R78	" , " , 33Ω	
C 1∿11	Capacitor, electrolytic, 10V, 22uF	6043 0160
C12∿14	" , Mylar, 50V, 0.012uF	6044 7330
C15	" , electrolytic, 10V, 22uF	6043 0160
C16, 17	" , " , 25V, 10uF	5055 4040
C18, 19	" , " , 10V, 22uF	6043 0160
C20	" , " , 25V, 10uF	5055 4040
C21	" , " , 15V, 100uF	5055 4200
C22	" , " , 16V, 47uF	5055 4010
C23	" , Mylar, 50V, 0.0015uF	6044 5170
C24	" , " , " , 0.047uF	6044 5410
C25	" , Polystyrene, 50V, 560pF	6043 5460
C26-1	" , electrolytic, 16V, 470uF	5055 4400
C26-2	" , " , " , "	" "
C27	" , " , 25V, 10uF	5055 4040
C28	" , " , 16V, 100uF	5055 4200
C29	" , " , " , 47uF	5055 4010
C30	" , Mylar, 50V, 0.0015uF	6044 5170
C31	" , " , " , 0.047uF	6044 5410
C32	" , Polystyrene, 50V, 560pF	6043 5460
C33-1	" , electrolytic, 16V, 470uF	5055 4400
C33-2	" , " , " , "	" "
C34, 35	" , " , 25V, 10uF	5055 4040
C36∿41	" , ceramic, 50V, 0.01uF	6044 0050
C42	" , electrolytic, 25V, 10uF	5055 4040

All resistors, 1/4W, ±5% unless otherwise specified.

PARTS LIST
Monitor amplifier PCB ass'y
REV. _____

Ref. No.	Description	Parts No.
C43	Capacitor, ceramic, 50V, 0.01uF	6044 0050
C44	(deleted)	
C45, 46	" , ceramic, 50V, 0.01uF	6044 0050

PARTS LIST
Monitor amplifier PCB ass'y
REV. _____

List below to page 74 applies to units with Serial No. 1601 and later.

Title	Monitor Amplifier PCB Assembly	Assembly No. 6085 2070
Ref. No.	Description	Parts No.
	PCB, monitor amplifier	6050 2474
IC1∿6	Integrated circuit, RC-4558-DN	6048 6070
IC7, 8	" " , LA-4032-P	6048 6040
Q1, 3	Transistor, 2SC1312Y-G	6048 0450
Q2, 4	" , 2SC1211-D	6048 0080
D1∿3	Diode, 1S953	5042 2720
D4, 5	" , 1N4002	6048 3270
K1	Relay, LZ-2, DC 12V	6047 0310
K2	" , LZ-4, "	6047 0300
R102	Potentiometer, trimmer, SR29R, 4.7KΩ	5053 3930
J1, 2	Resistor type jumper, 0Ω	
R 1∿4	Resistor, carbon, 12KΩ	
R 5	" , " , 47KΩ	
R 6	" , " , 51KΩ	
R 7	" , " , 22KΩ	
R 8	" , " , 47KΩ	
R 9	" , " , 6.2KΩ	
R10	" , " , 15KΩ	
R11	" , " , 12KΩ	
R12	" , " , 620Ω	
R13	" , " , 3.9KΩ	
R14	" , " , 2.7KΩ	
R15	" , " , 150Ω	
R16	" , " , 12KΩ	
R17	" , " , 47KΩ	
R18	(deleted)	
R19	" , " , 47KΩ	
R20	" , " , 270Ω	
R21	" , " , 6.8KΩ	
R22	" , " , 12KΩ	
R23	" , " , 47KΩ	
R24	" , " , 150Ω	
R25	" , " , 18KΩ	
R26	" , " , 12KΩ	

All resistors, ¼W, ±5% unless otherwise specified.

PARTS LIST
Monitor amplifier PCB ass'y
REV. ____

Ref. No.	Description	Parts No.
R27	Resistor, carbon, 47KΩ	
R28, 30	" , " , 150Ω	
R29	" , " , 18KΩ	
R31	" , " , 100KΩ	
R32	" , " , 18KΩ	
R33	" , " , 150Ω	
R34	" , " , 100KΩ	
R35	" , " , 18KΩ	
R36, 37	" , " , 33KΩ	
R38	" , " , 36KΩ	
R39	" , " , 10KΩ	
R40	" , " , 120Ω	
R41	" , " , 15KΩ	
R42, 43	" , " , 7.5KΩ	
R44	" , " , 15KΩ	
R45, 46	" , " , 1.5KΩ	
R47	(deleted)	
R48	" , " , 220KΩ	
R49	" , " , 22KΩ	
R50	" , " , 220KΩ	
R51	" , " , 220KΩ	
R52	" , " , 5.6KΩ	
R53	" , " , 22KΩ	
R54	" , " , 47KΩ	
R55	(deleted)	
R56	" , " , 220KΩ	
R57	" , " , 22KΩ	
R58, 59	" , " , 220KΩ	
R60	" , " , 5.6KΩ	
R61	" , " , 22KΩ	
R62	" , " , 47KΩ	
R63, 64	" , " , 22KΩ	
R65	" , " , 100Ω	
R66	" , " , 220KΩ	
R67	" , " , 220Ω	
R68	" , " , 1KΩ	

All resistors ¼W, ±5% unless otherwise specified

PARTS LIST
Monitor amplifier PCB ass'y
REV. _____

Ref. No.	Description	Parts No.
R69	Resistor, carbon, 100Ω	
R70	" , " , 220KΩ	
R71	" , " , 220Ω	
R72	" , " , 1KΩ	
R73	" , " , 39KΩ	
R74	" , " , 6.8KΩ	
R75	" , " , 47KΩ	
R76	" , " , 4.7KΩ	
R77	" , " , 6.8KΩ	
R78	" , " , 120Ω	
R79	" , " , 39KΩ	
R80	" , " , 6.8KΩ	
R81	" , " , 47KΩ	
R82	" , " , 4.7KΩ	
R83	" , " , 6.8KΩ	
R84	" , " , 56Ω	
R85	" , " , 10KΩ	
R86	" , " , 1.2KΩ	
C 1~11	Capacitor, electrolytic, 10V, 22uF	6043 0160
C12~14	" , Mylar, 50V, 0.012uF	6044 7330-01
C15	" , electrolytic, 10V, 22uF	6043 0160
C16, 17	" , " , 25V, 10uF	5055 4040
C18, 19	" , " , 10V, 22uF	6043 0160
C20	" , " , 25V, 10uF	5055 4040
C21	" , " , 15V, 100uF	5055 4200
C22	" , " , 16V, 47uF	5055 4010
C23	" , Mylar, 50V, 0.0015uF	6044 5170
C24	" , " , " , 0.047uF	6044 5410
C25	" , Polystyrene, 50V, 560pF	6043 5460
C26-1	" , electrolytic, 16V, 470uF	5055 4400
C26-2	" , " , " , "	" "
C27	" , " , 25V, 10uF	5055 4040
C28	" , " , 16V, 100uF	5055 4200
C29	" , " , " , 47uF	5055 4010
C30	" , Mylar, 50V, 0.0015uF	6044 5170
C31	" , " , " , 0.047uF	6044 5410

All resistors ¼W, ±5% unless otherwise specified.

PARTS LIST
Monitor amplifier PCB ass'y
REV. _____

Ref. No.	Description	Parts No.
C32	Capacitor, Polystyrene,50V, 560pF	6043 5460
C33-1	" , electrolytic, 16V, 470uF	5055 4400
C33-2	" , " , " , "	" "
C34, 35	" , " , 25V, 10uF	5055 4040
C36∿41	" , ceramic, 50V, 0.01uF	6044 0050
C42	" , electrolytic, 25V, 10uF	5055 4040
C43	" , ceramic, 50V, 0.01uF	6044 0050
C44	(deleted)	
C45, 46	" , " , " , "	" "
C47∿50	" , electrolytic, 25V, 4.7uF	5055 4530

PARTS LIST
Monitor amplifier PCB ass'y
REV. _____

9.4A Mor. Amplifier PCB Assembly (Model 5A only)

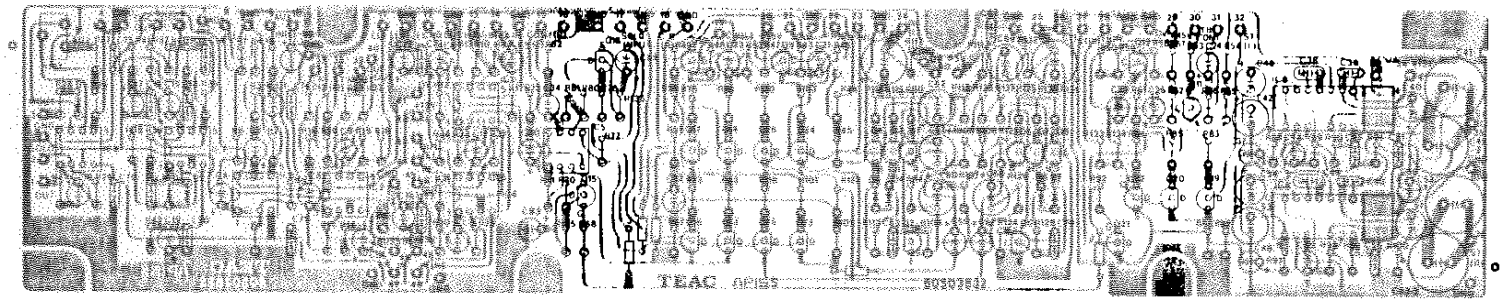

LOCATION OF COMPONENTS
Model 5A Audio Mixer
Monitor amp. PCB ass'y
REV. ____

Title	Monitor Amplifier PCB Assembly	Assembly No. 6085 3330
Ref. No.	Description	Parts No.
	PCB, monitor amplifier	6050 3832
IC 1∿7	Integrated circuit, RC-4558-DN	6048 6070
IC 8, 9	" " , LA-4201	6048 6130
Q 1	Transistor, 2SA-725F	6048 0520
Q 2	" , 2SC-1312Y-G	6048 0450
Q 3	" , 2SD-355	6048 0780
Q 4	" , 2SB-525	6048 0790
Q 5	" , 2SA-725F	6048 0520
Q 6	" , 2SC-1312Y-G	6048 0450
Q 7	" , 2SD-355	6048 0780
Q 8	" , 2SB-525	6048 0790
Q 9∿12	" , 2SC-1312Y-G	6048 0450
Q 13∿26	FET, 2N5462	6048 0710
D 1∿7	Diode, 1S2473	6048 3370
R 137	Potentiometer, trimmer SR29R, 4.7KΩ	5053 3930
J	Resistor type jumper, 0	
R 1	Resistor, carbon, 39KΩ	
R 2	" , " , 9.1KΩ	
R 3	" , " , 47KΩ	
R 4	" , " , 100Ω	
R 5	" , " , 39KΩ	
R 6	" , " , 9.1KΩ	
R 7	" , " , 47KΩ	
R 8	" , " , 100Ω	
R 9∿12	" , " , 12KΩ	
R 13	" , " , 47KΩ	
R 14	" , " , 51KΩ	
R 15	" , " , 3.6KΩ	
R 16	" , " , 47KΩ	
R 17	" , " , 100Ω	
R 18	" , " , 1.1KΩ	

All resistors ¼W, ±5% unless otherwise specified.

PARTS LIST
Model 5A Audio Mixer
Monitor amplifier PCB ass'y
REV. _____

Ref. No.	Description	Parts No.
R 19	Resistor, carbon, 15KΩ	
R 20	" , " , 4.7KΩ	
R 21	" , " , 470Ω	
R 22	" , " , 3.9KΩ	
R 23	" , " , 2.7KΩ	
R 24	" , " , 2.2KΩ	
R 25	" , " , 100Ω	
R 26	" , " , 47KΩ	
R 27	" , " , 270Ω	
R 28	" , " , 6.8KΩ	
R 29	" , " , 2.2KΩ	
R 30	" , " , 47KΩ	
R 31	" , " , 100Ω	
R 32	" , " , 2.2KΩ	
R 33	" , " , 47KΩ	
R 34	" , " , 100Ω	
R 35	" , " , 10KΩ	
R 36	" , " , 33KΩ	
R 37	" , " , 2.2KΩ	
R 38	" , " , 33KΩ	
R 39	" , " , 47KΩ	
R 40	" , " , 470Ω	
R 41, 42	" , " , 1.5KΩ	
R 43	" , " , 4.7KΩ	
R 44	" , " , 39KΩ	
R 45	" , " , 6.8KΩ	
R 46	" , " , 47KΩ	
R 47	" , " , 15KΩ	
R 48	" , " , 33KΩ	
R 49	" , " , 15KΩ	
R 50	" , " , 33KΩ	
R 51, 52	" , " , 47KΩ	
R 53	" , " , 4.7KΩ	
R 54	" , " , 39KΩ	
R 55	" , " , 6.8KΩ	
R 56	" , " , 47KΩ	

All resistors ¼W, ±5% unless otherwise specified.

PARTS LIST
Model 5A Audio Mixer
Monitor amplifier PCB ass'y
REV. ____

Ref. No.	Description	Parts No.
R 57	Resistor, carbon, 15KΩ	
R 58	" , " , 33KΩ	
R 59	" , " , 15KΩ	
R 60	" , " , 33KΩ	
R 61, 62	" , " , 47KΩ	
R 63∿69	" , " , 100KΩ	
R 70	" , " , 1.8KΩ	
R 71, 72	" , " , 47KΩ	
R 73∿79	" , " , 100KΩ	
R 80	" , " , 1.8KΩ	
R 81, 82	" , " , 47KΩ	
R 83∿88	" , " , 100KΩ	
R 89	" , " , 2.2KΩ	
R 90	" , " , 82KΩ	
R 91	" , " , 1KΩ	
R 92∿97	" , " , 100KΩ	
R 98	" , " , 2.2KΩ	
R 99	" , " , 82KΩ	
R100	" , " , 1KΩ	
R101∿105	" , " , 100KΩ	
R106	" , " , 150KΩ	
R107	" , " , 56KΩ	
R108	" , " , 18KΩ	
R109	" , " , 1.5KΩ	
R110	" , " , 2.2KΩ	
R111	" , " , 100Ω	
R112	" , " , 220Ω	
R113	" , " , 470Ω	
R114	" , " , 220Ω	
R115, 116	" , " , 1Ω	
R117	" , " , 1KΩ	
R118∿122	" , " , 100KΩ	
R123	" , " , 18KΩ	
R124	" , " , 1.5KΩ	
R125	" , " , 2.2KΩ	
R126	" , " , 100Ω	

All resistors ¼W, ±5% unless otherwise specified.

PARTS LIST
Model 5A Audio Mixer
Monitor amplifier PCB ass'y
REV. _____

Title	Description	Parts No.
R127	Resistor, carbon, 220Ω	
R128	" , " , 470Ω	
R129	" , " , 220Ω	
R130, 131	" , " , 1Ω	
R132	" , " , 1KΩ	
R133	" , " , 10KΩ	
R134	" , " , 1.8KΩ	
R135, 136	" , " , 27KΩ	
C 1∿12	Capacitor, electrolytic, 10V, 22uF	6043 0160
C 13, 14	" , Mylar, 50V, 0.012uF	6044 7330
C 15	" , electrolytic, 10V, 22uF	6043 0160
C 16	" , Mylar, 50V, 0.012uF	6044 7330
C 17	" , electrolytic, 25V, 10uF	5055 4040
C 18	" , ceramic, 50V, 0.01uF	6044 0050
C 19	" , electrolytic, 25V, 10uF	5055 4040
C 20	" , ceramic, 50V, 0.01uF	6044 0050
C 21∿26	" , dipped Tantalum, 25V, 1uF	6043 1800
C 27∿29	" , ceramic, 50V, 0.01uF	6044 0050
C 30	" , electrolytic, 10V, 22uF	6043 0160
C 31∿33	" , ceramic, 50V, 0.01uF	6044 0050
C 34	" , electrolytic, 10V, 22uF	6043 0160
C 35, 36	" , ceramic, 50V, 0.01uF	6044 0050
C 37	" , electrolytic, 125V, 3.3uF	6043 2140
C 38	" , dipped Mica, 50V, 100pF	5054 7440
C 39	" , Mylar, 50V, 0.001uF	6044 5160
C 40	" , electrolytic, 10V, 47uF	6043 0180
C 41-1, -2	" , " , 16V, 470uF	5055 4400
C 42	" , " , 10V, 100uF	5055 4570
C 43	" , " , 10V, 33uF	5055 4240
C 44	" , " , 10V, 22uF	6043 0160
C 45	" , Mylar, 50V, 0.1uF	6044 5550
C 46, 47	" , ceramic, 50V, 0.01uF	6044 0050
C 48	" , electrolytic, 25V, 3.3uF	6043 2140
C 49	" , dipped Mica, 50V, 100pF	5054 7440
C 50	" , Mylar, 50V, 0.001uF	6044 5160

All resistors ¼W, ±5% unless otherwise specified.

PARTS LIST
Model 5A Audio Mixer
Monitor amplifier PCB ass'y
REV. _____

Ref. No.	Description	Parts No.
C 51	Capacitor, electrolytic, 10V, 47uF	6043 0860
C 52-1, -2	" , " , 16V, 470uF	5055 4400
C 53	" , " , 10V, 100uF	5055 4570
C 54	" , " , 10V, 33uF	5055 4240
C 55	" , " , 10V, 22uF	6043 0160
C 56	" , Mylar, 50V, 0.1uF	6044 5550
C 57, 58	" , ceramic, 50V, 0.01uF	6044 0050
C 59	" , electrolytic, 16V, 10uF	6043 1770
C 60~62	" , " , 10V, 47uF	6043 0180
C 63	" , dipped Mica, 50V, 680pF	5054 7470
C 64	" , electrolytic, 6.3V, 470uF	5055 4600
C 65, 66	" , ceramic, 50V, 0.01uF	6044 0050
C 67	" , electrolytic, 16V, 10uF	6043 1770
C 68, 69	" , " , 10V, 47uF	6043 0180
C 70	" , dipped Mica, 50V, 680pF	5054 7470
C 71	" , electrolytic, 6.3V, 470uF	5055 4600
C 72	" , " , 25V, 10uF	5055 4040
C 73~75	" , ceramic, 50V, 0.01uF	6044 0050
C 76	" , electrolytic, 25V, 10uF	5055 4040
C 77~79	" , ceramic, 50V, 0.01uF	6044 0050
C 80	" , electrolytic, 25V, 10uF	5055 4040
C 81, 82	" , ceramic, 50V, 0.01uF	6044 0050
C 83, 84	" , electrolytic, 16V, 10uF	5055 4050

PARTS LIST
Model 5A Audio Mixer
Monitor amplifier PCB ass'y
REV. _____

9.5 **Talkback** amplifier PCB assembly (for both Model 5 and 5A)

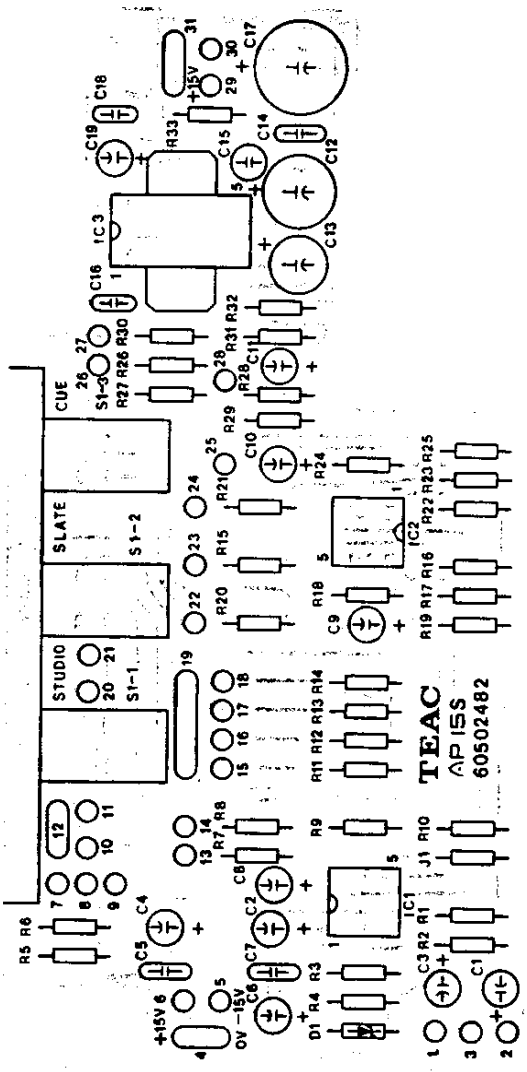

LOCATION OF COMPONENTS
Talkback amplifier PCB
REV. _____

Title	Talkback Amplifier PCB Assembly	Assembly No. 6085 2090
Ref. No.	Description	Parts No.
	PCB, Talkback amplifier	6050 4282
IC1, 2	Integrated circuit, RC-4558-DN	6048 6070
IC3	" " , LA-4032-P	6048 6040
D1	Diode, Zener, RD-6A	5042 2730
S1∿3	Switch, push (C)	6051 0552
J1	Resistor type jumper, 0Ω	
R 1	Resistor, carbon, 47KΩ	
R 2	" , " , 1KΩ	
R 3	" , " , 100KΩ	
R 4	" , " , 2.7KΩ	
R 5	" , " , 1KΩ	
R 6	" , " , 120Ω	
R 7, 8	" , " , 47KΩ	
R 9	" , " , 470KΩ	
R10	" , " , 47KΩ	
R11∿14	" , " , 12KΩ	
R15	" , " , 1KΩ	
R16	" , " , 47KΩ	
R17	" , " , 1KΩ	
R18	" , " , 10KΩ	
R19	" , " , 47KΩ	
R20	" , " , 6.2KΩ	
R21	" , " , 1KΩ	
R22	" , " , 47KΩ	
R23	" , " , 1KΩ	
R24	" , " , 3.9KΩ	
R25	" , " , 47KΩ	
R26∿28	(deleted)	
R29	" , " , 1KΩ	
R30	(deleted)	
R31	" , " , 47KΩ	

All resistors, 1/4W, ±5% unless otherwise specified.

PARTS LIST
Talkback amplifier PCB ass'y
REV. _____

Ref. No.	Description	Parts No.
R32	Resistor, carbon, 330Ω	
R33	" , " , 1KΩ	
C 1~3	Capacitor, electrolytic, 10V, 22uF	6043 0160
C 4	" , " , 25V, 10uF	5055 4040
C 5	" , ceramic, 50V, 0.01uF	6044 0050
C 6	" , electrolytic, 25V, 10uF	5055 4040
C 7	" , ceramic, 50V, 0.01uF	6044 0050
C 8~10	" , electrolytic, 10V, 22uF	6043 0160
C11	" , " , 25V, 10uF	5055 4040
C12	" , " , 16V, 100uF	5055 4200
C13	" , " , " , 47uF	5055 4010
C14	" , Mylar, 50V, 0.0047uF	6044 5200
C15	" , Polystyrene, 50V, 560pF	6043 5460
C16	" , Mylar, 50V, 0.0015uF	6044 5170
C17	" , electrolytic, 16V, 470uF	5055 4400
C18	" , ceramic, 50V, 0.01uF	6044 0050
C19	" , electrolytic, 25V, 10uF	5055 4040

All resistors, 1/4W, ±5% unless otherwise specified.

PARTS LIST
Talkback amplifier PCB ass'y
REV. _____

9.6 Connector Board PCB Assembly (See Section 8.3 and 8.3A for component parts No.)

Model 5

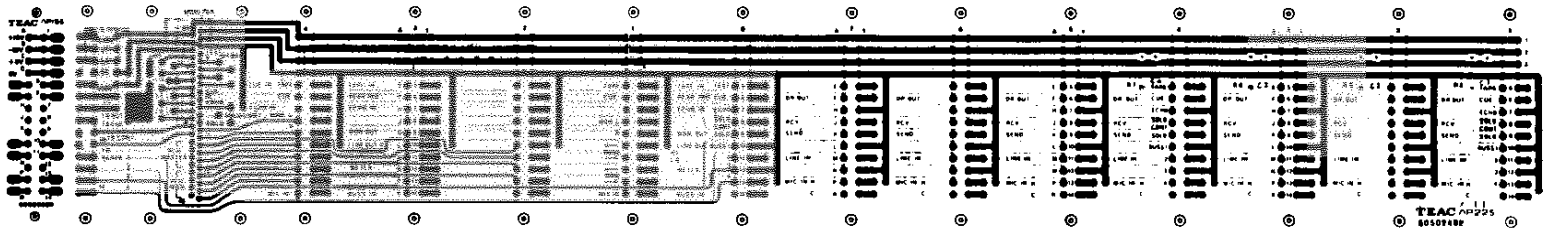

Model 5A

LOCATION OF COMPONENTS
Connector board PCB ass'y
REV. ____

10. CIRCUIT SCHEMATICS

10.1 Connector board and related circuitry (Model 5 only)

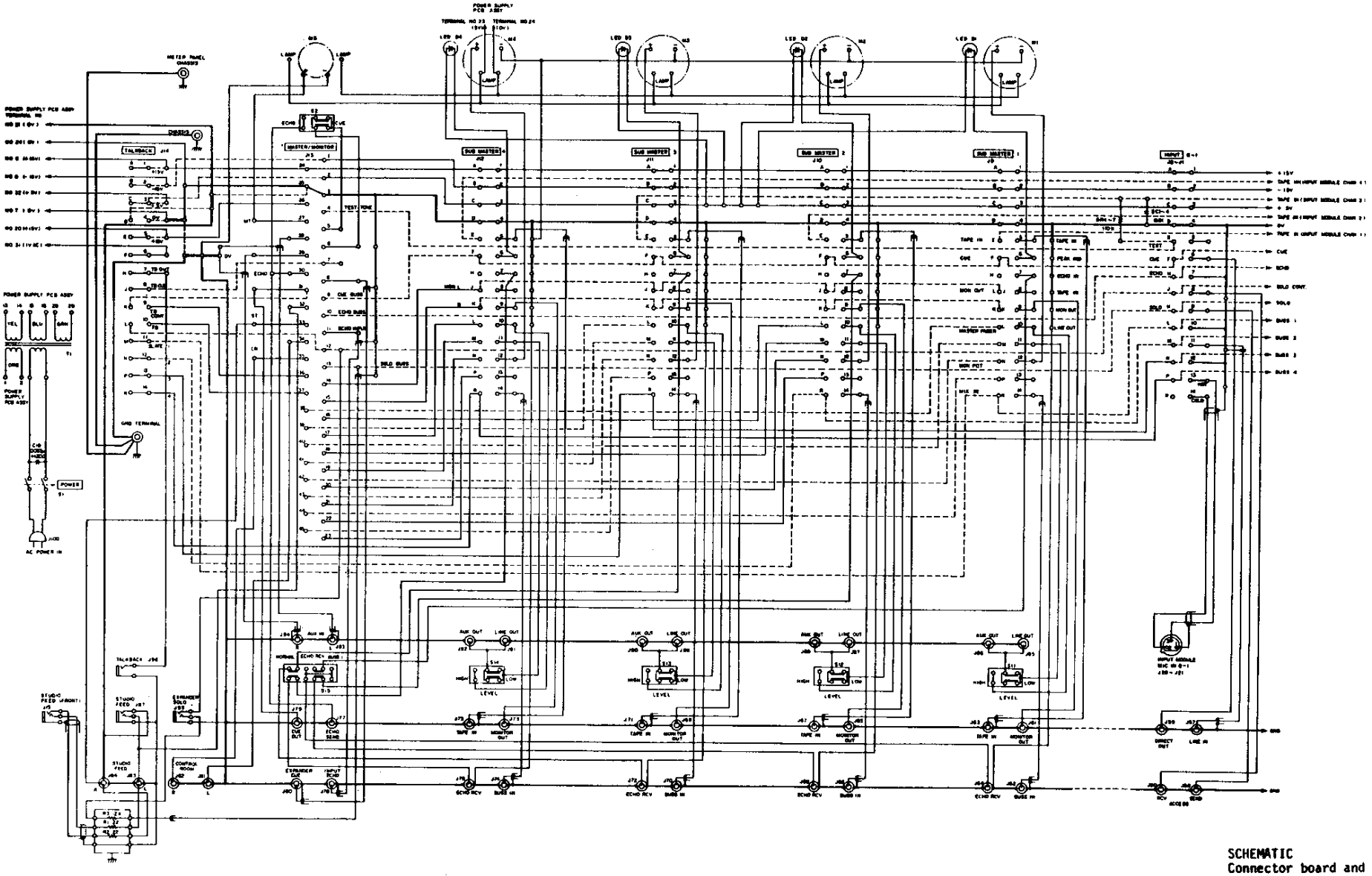

SCHEMATIC
Connector board and related circuitry
REV. ____

10.1A Connector board and related circuitry (Model 5A only)

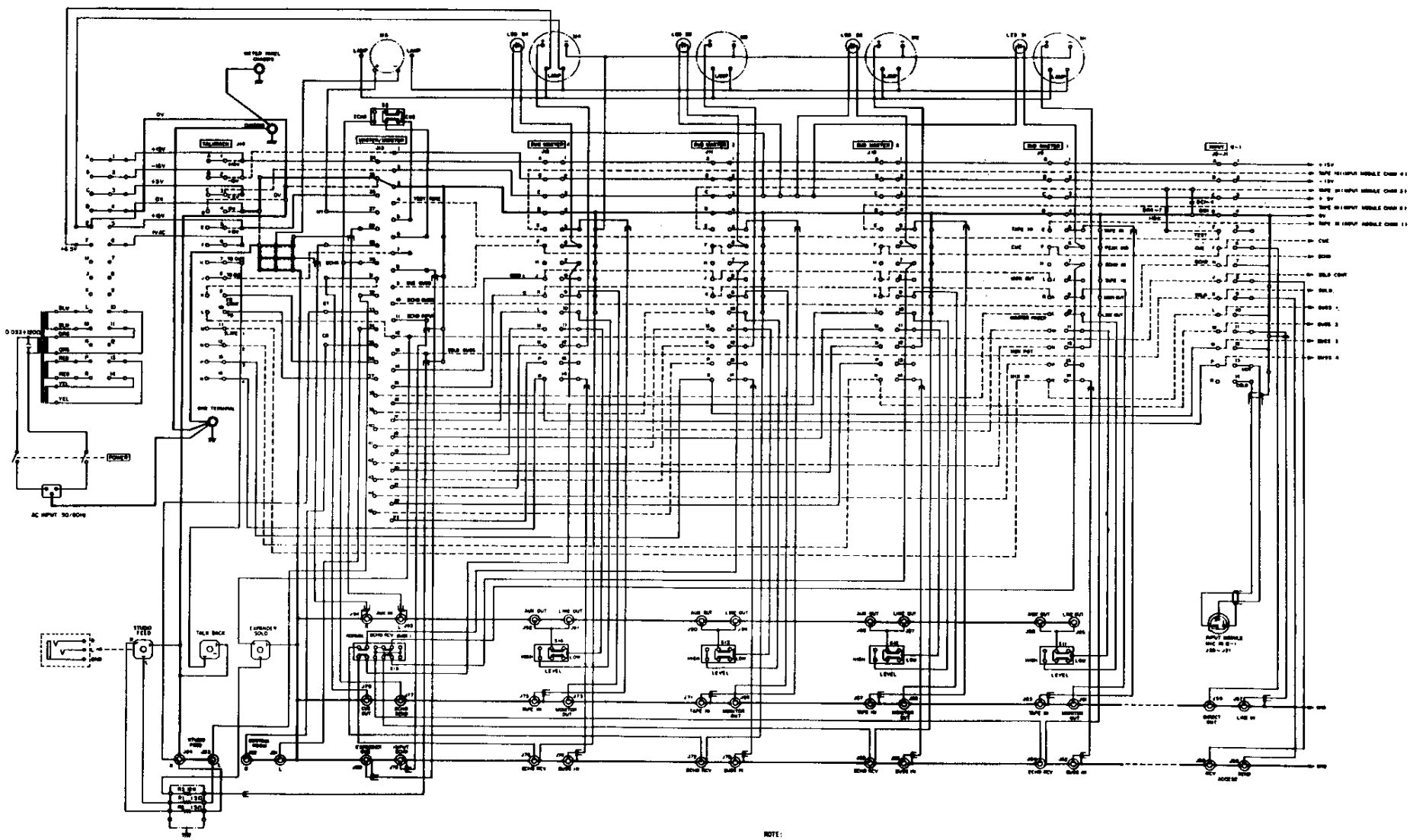

NOTE:

Of the PC pattern interconnecting J1 through J14 on the 2 side clad mother board PCB, the broken line indicates the copper on the front side and the unbroken lines for those on the rear panel side.

* As shown in the Schematic, the Test Tone line is connected to Pin E of J8 only and does not extend to the remaining J1~J7.

Pin E of J1~J6 are respectively connected to the Tape In lines of channels 1~6 via R9~R7, and capacitors C1~C6 are connected between the Tape In lines and the 0V line.

No resistors and capacitors are connected between Pin E of J5~J7 and the Tape In lines.

SCHEMATIC
TEAC Tascam Series 5A
Connector board and
related circuitry
DWG. _____ REV. _____

10.2 Power supply unit (Model 5 only)

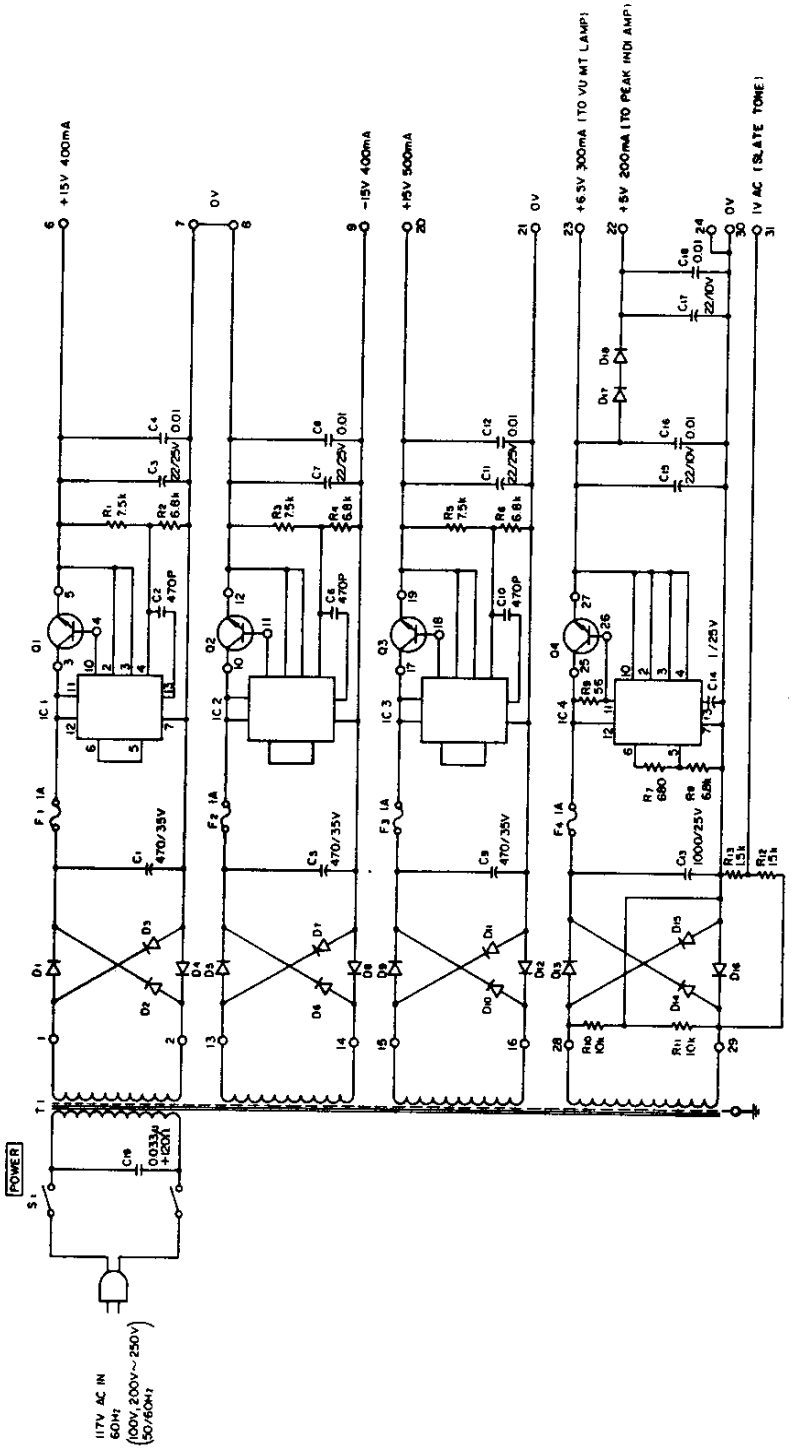

SCHEMATIC
Power supply unit
REV. ____

10.2A Power Supply Module (Model 5A only)

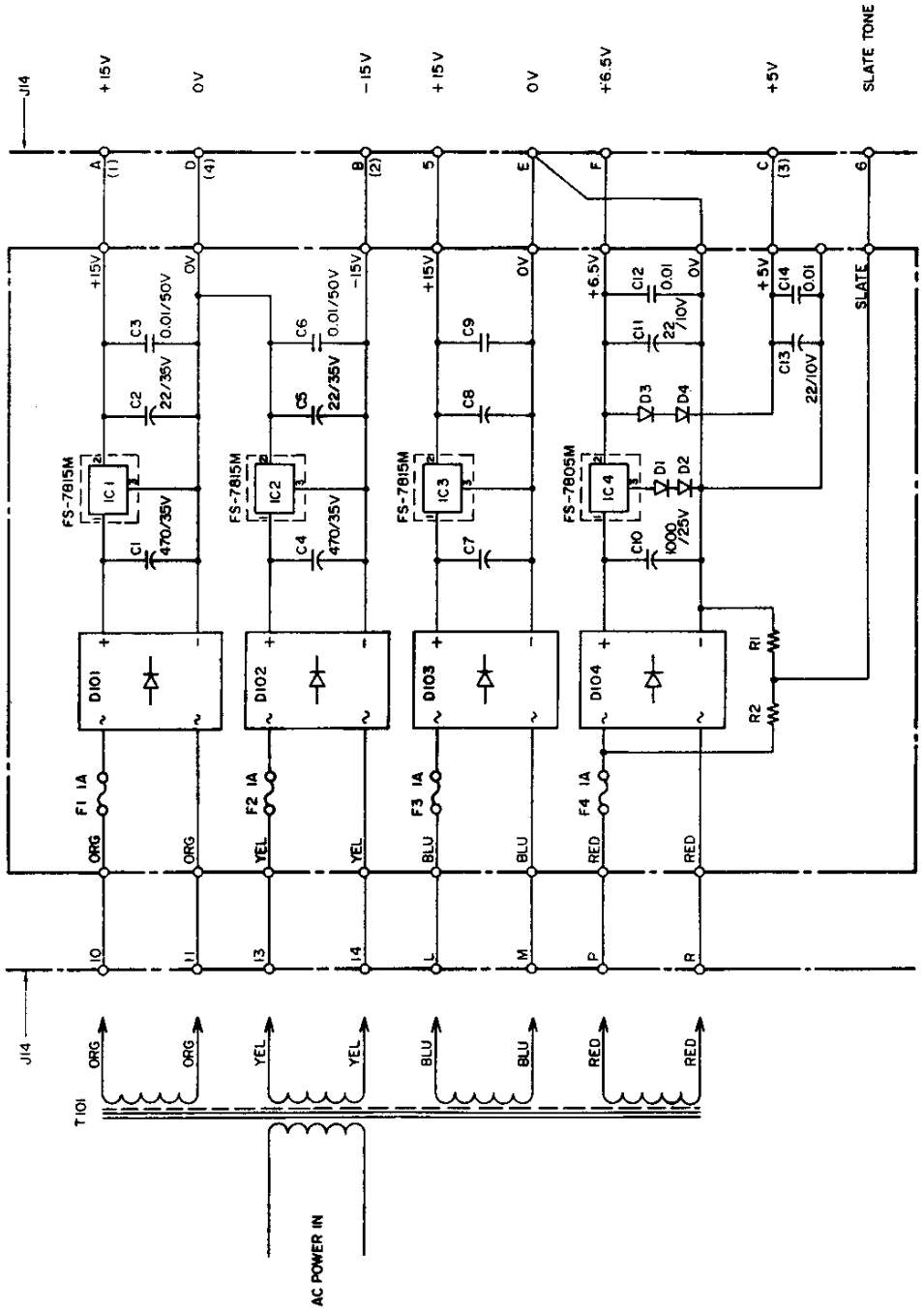

SCHEMATIC
Model 5A Audio Mixer
Power supply module
REV. ____

10.3 Model 201 Input Module

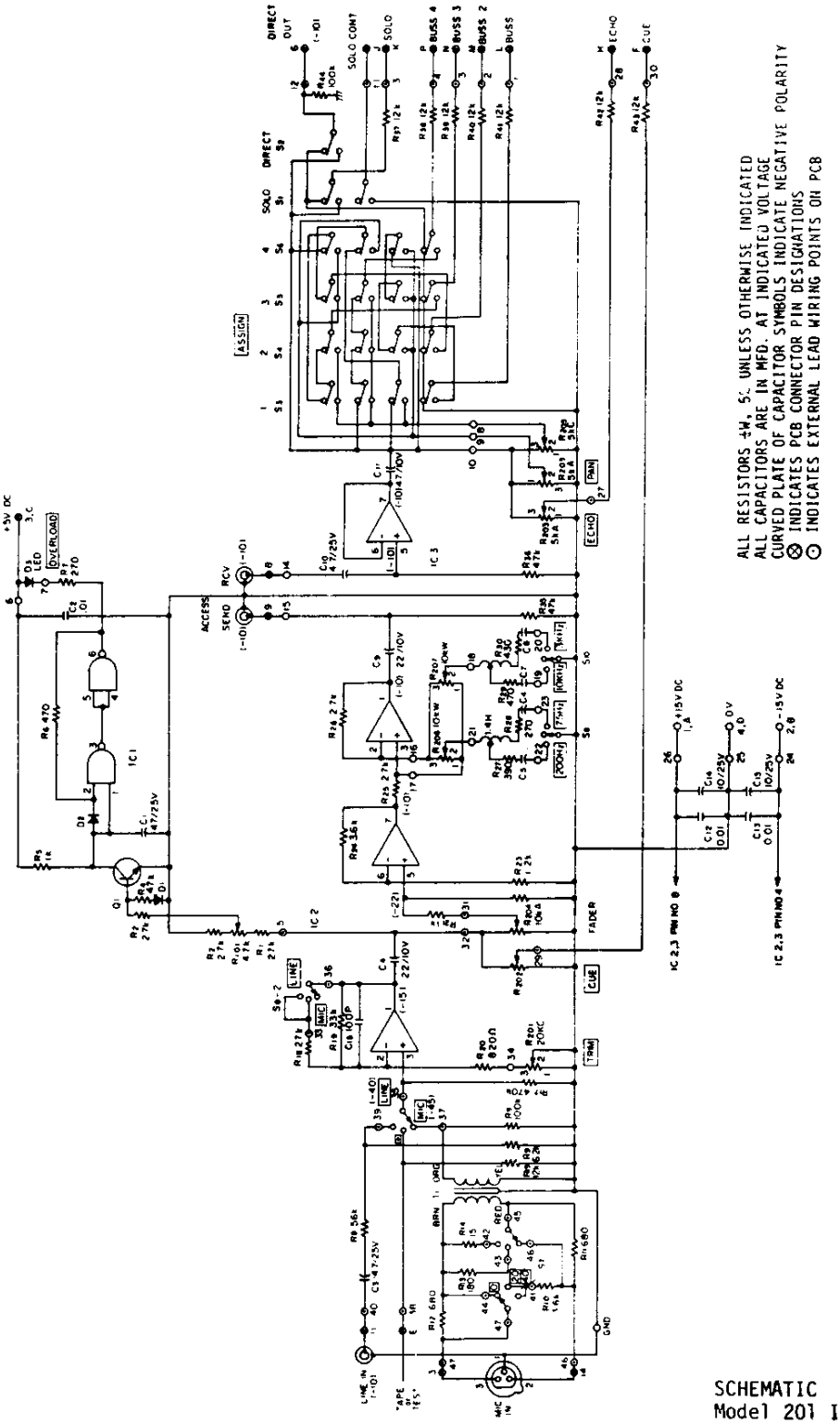

SCHEMATIC
Model 201 Input module
REV. 1

10.4 Model 202 Submaster Module

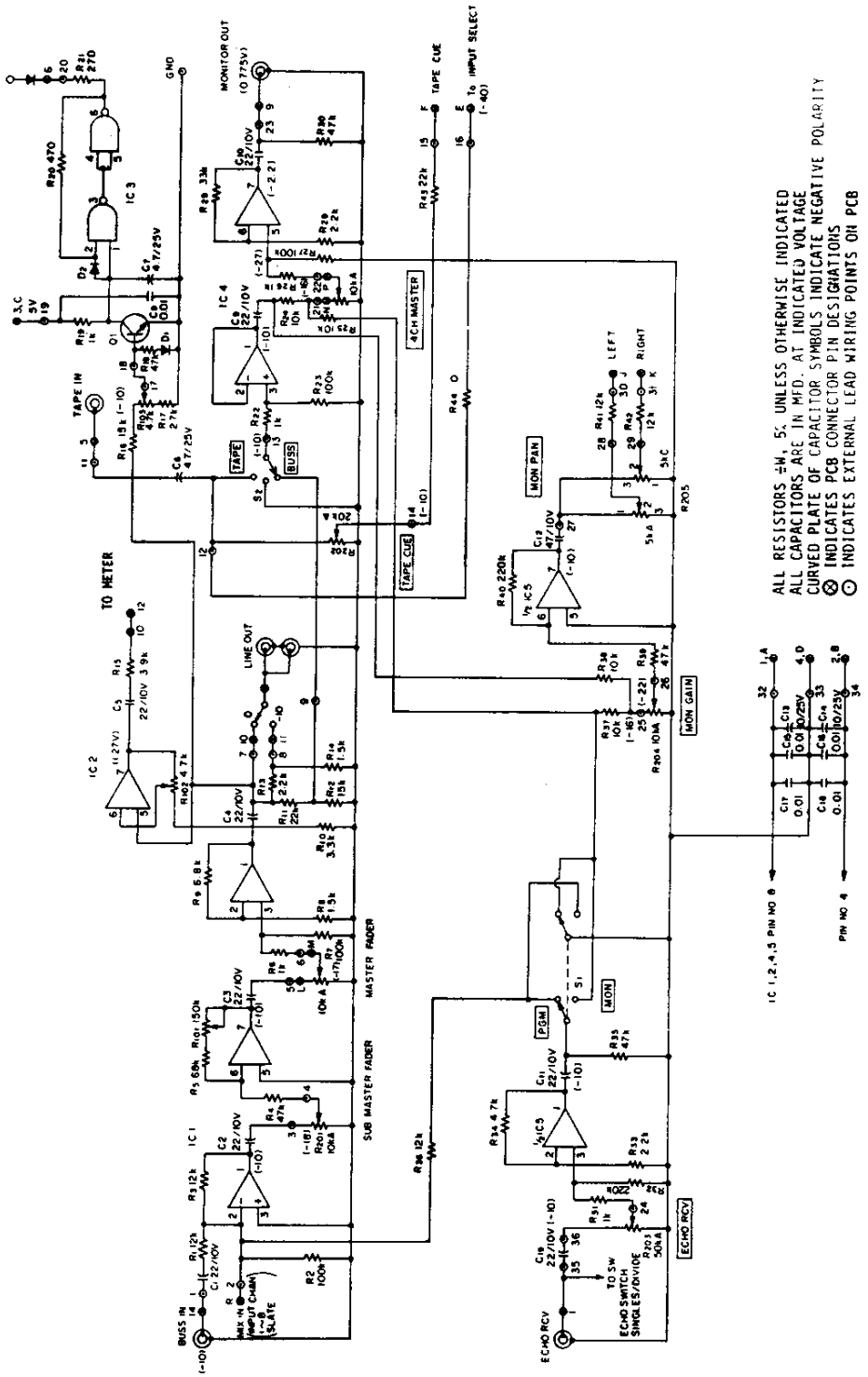

SCHEMATIC
Model 202 Submaster module
REV. 2

10.5.1 Model 203 Master/Monitor Module (up to Serial No. 1600) (Model 5 only)

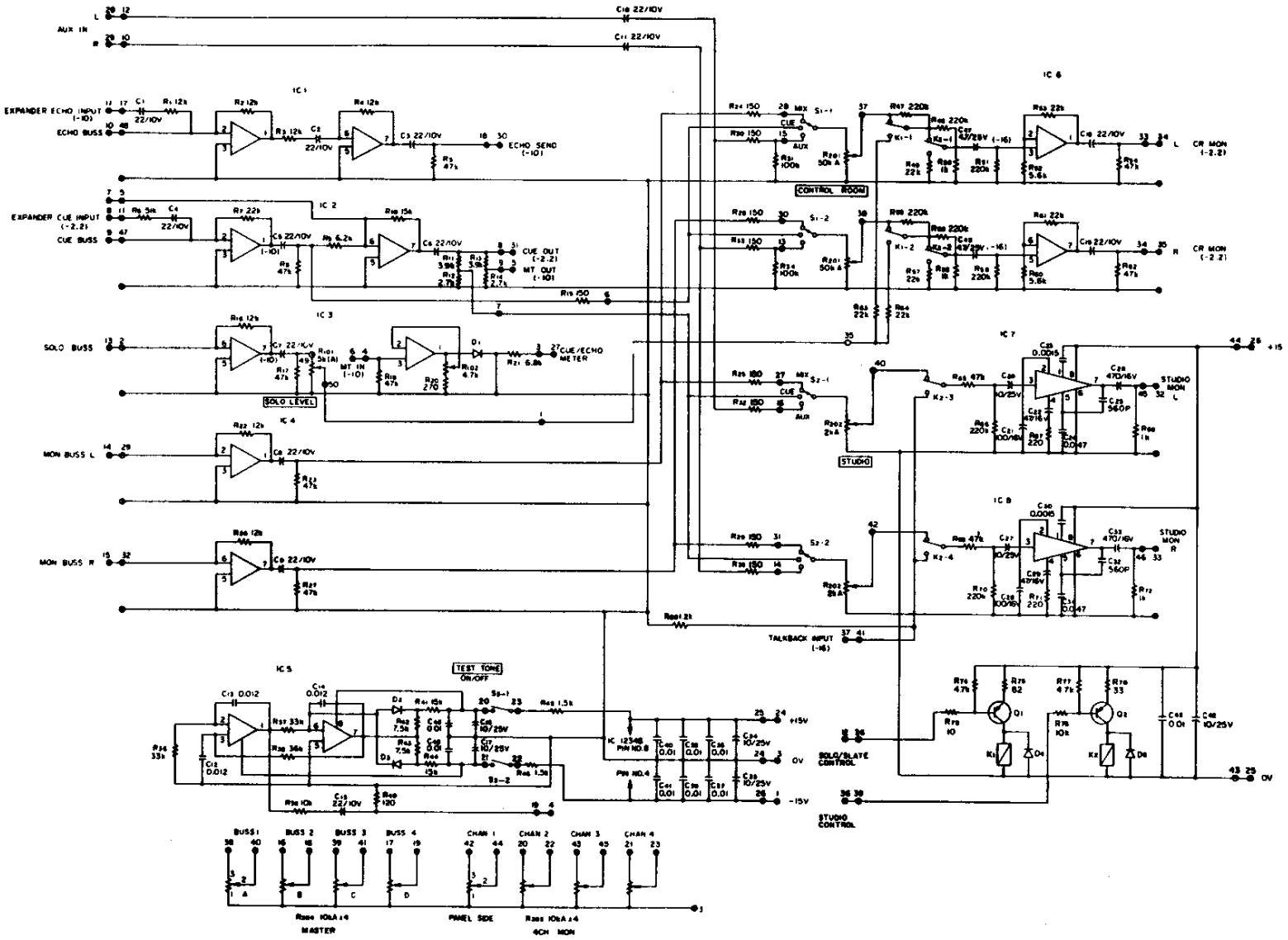

ALL RESISTORS ¼W, 5% UNLESS OTHERWISE INDICATED
ALL CAPACITORS ARE IN MFD. AT INDICATED VOLTAGE
CURVED PLATE OF CAPACITOR SYMBOLS INDICATE NEGATIVE POLARITY
⊗ INDICATES PCB CONNECTOR PIN DESIGNATIONS
○ INDICATES EXTERNAL LEAD WIRING POINTS ON PCB

SCHEMATIC
Model 203 Master/Monitor module
REV. ____

10.5.2 Model 203 Master/Monitor Module (from Serial No. 1601) (Model 5 only)

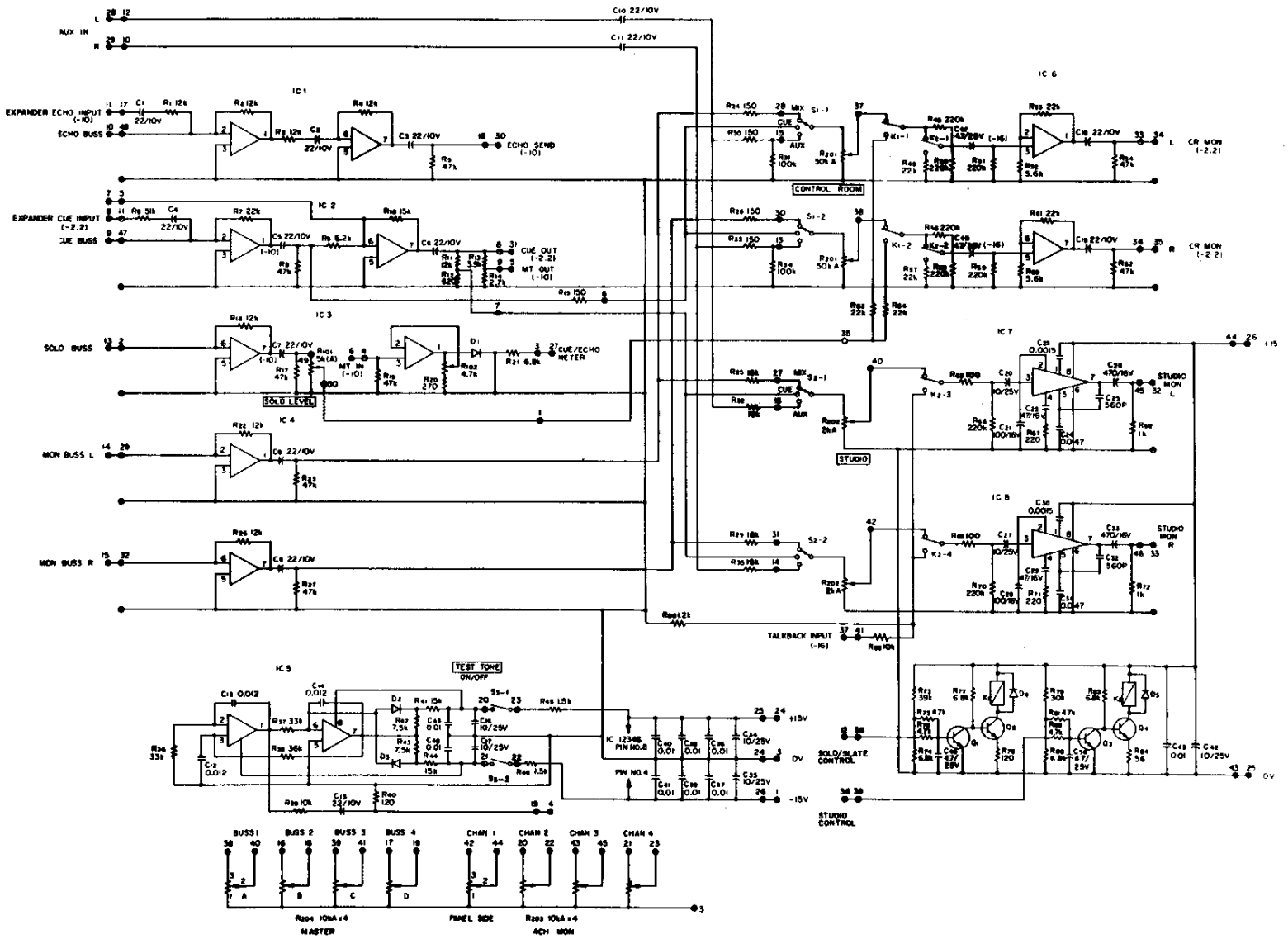

ALL RESISTORS ¼W, 5% UNLESS OTHERWISE INDICATED
ALL CAPACITORS ARE IN MFD. AT INDICATED VOLTAGE
CURVED PLATE OF CAPACITOR SYMBOLS INDICATE NEGATIVE POLARITY
⊗ INDICATES PCB CONNECTOR PIN DESIGNATIONS
○ INDICATES EXTERNAL LEAD WIRING POINTS ON PCB.

SCHEMATIC
Model 203 Master/Monitor module
REV. 1

10.5A Mod 203A Master/Monitor Module (Model 5A)

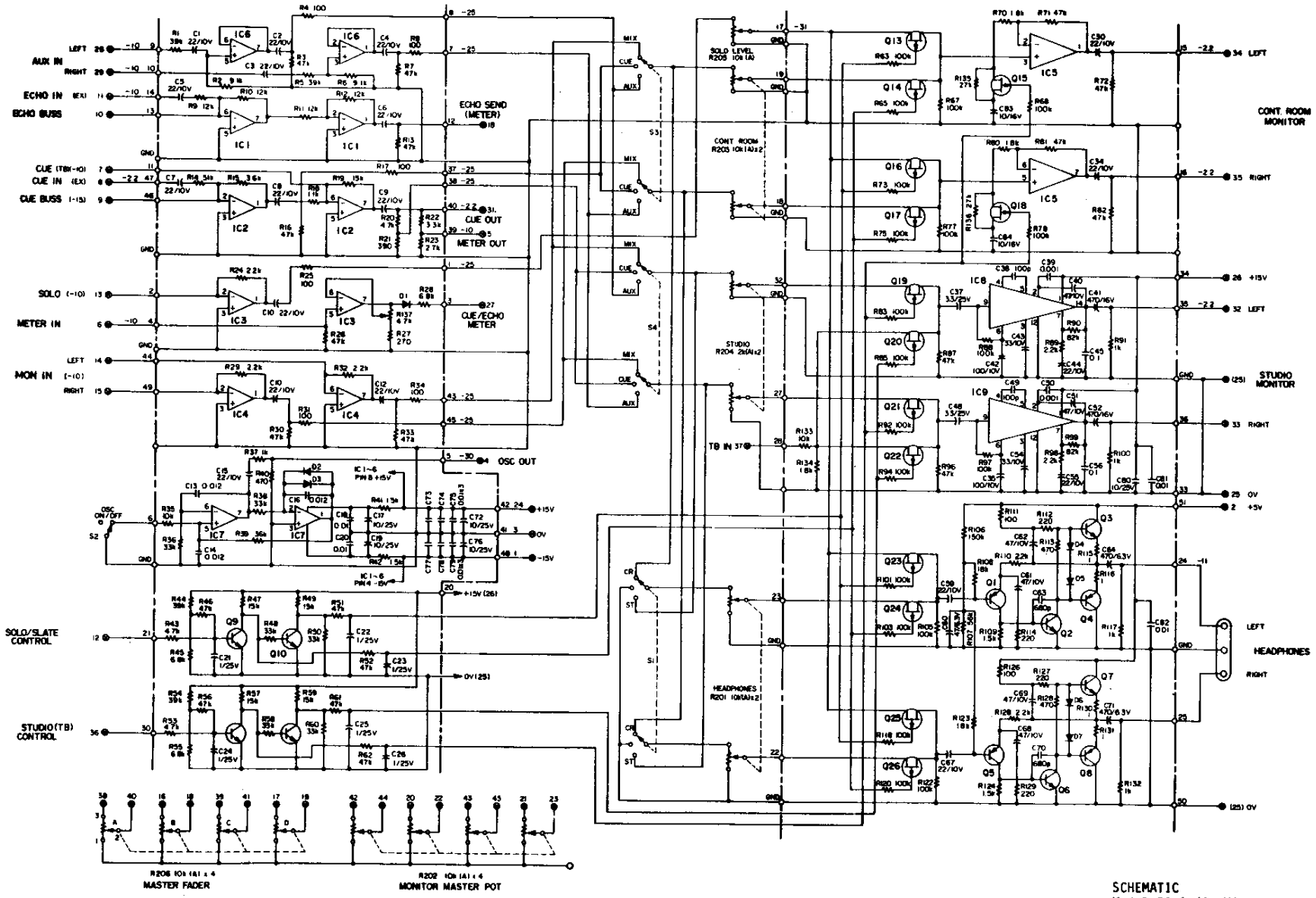

SCHEMATIC
Model 5A Audio Mixer
Model 203A Master/Monitor Module
REV. ____

10.6 Model 204 Talkback Module (for both Model 5 and 5A)

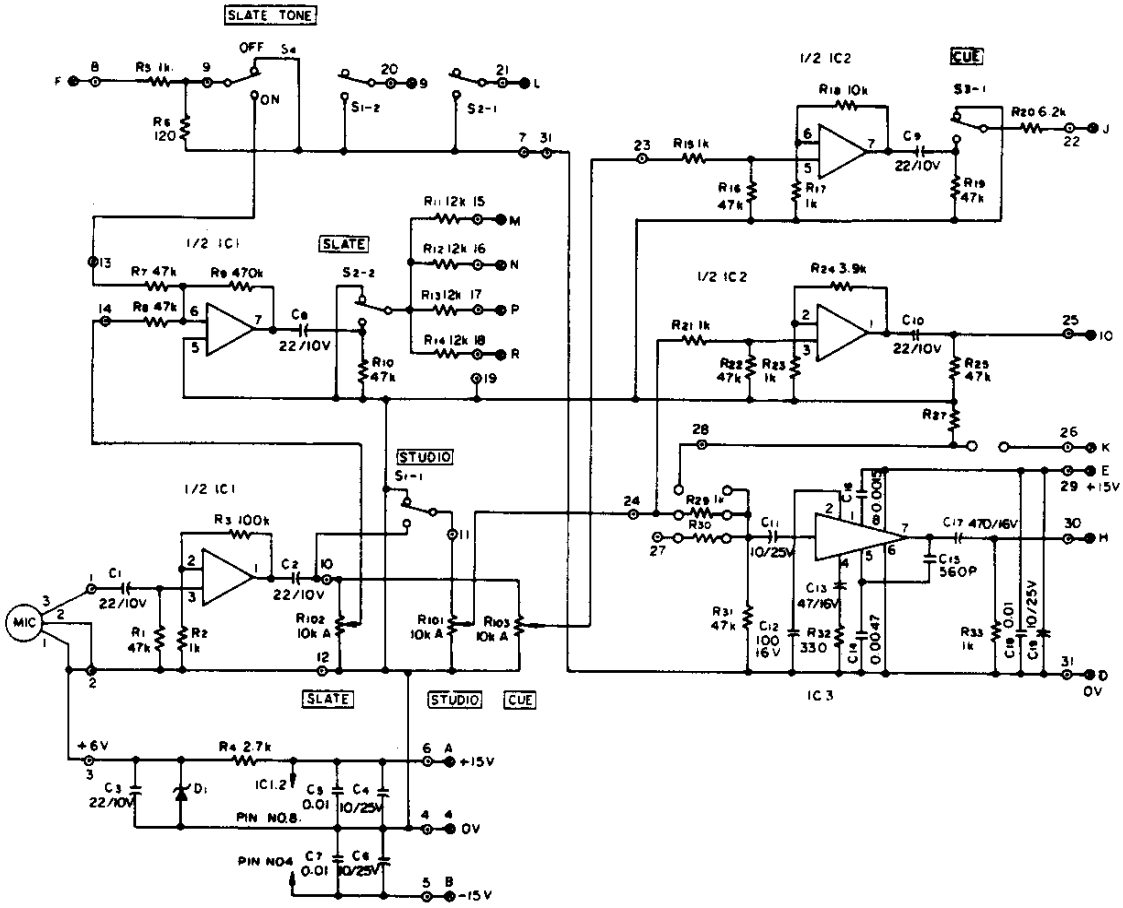

ALL RESISTORS ¼W, 5% UNLESS OTHERWISE INDICATED
ALL CAPACITORS ARE IN MFD. AT INDICATED VOLTAGE
CURVED PLATE OF CAPACITOR SYMBOLS INDICATE NEGATIVE POLARITY
⊗ INDICATES PCB CONNECTOR PIN DESIGNATIONS
⊙ INDICATES EXTERNAL LEAD WIRING POINTS ON PCB

SCHEMATIC
Model 204 Talkback module
REV. 2

TEAC

TEAC CORPORATION 3-7-3, NAKA-CHO, MUSASHINO, TOKYO PHONE (0422) 53-1111

TEAC CORPORATION OF AMERICA 7733 TELEGRAPH ROAD, MONTEBELLO, CALIFORNIA 90640 PHONE (213) 726-0303

PRINTED IN JAPAN 0678SA, 8 D-2735B