Model-5A

OPERATION MANUAL

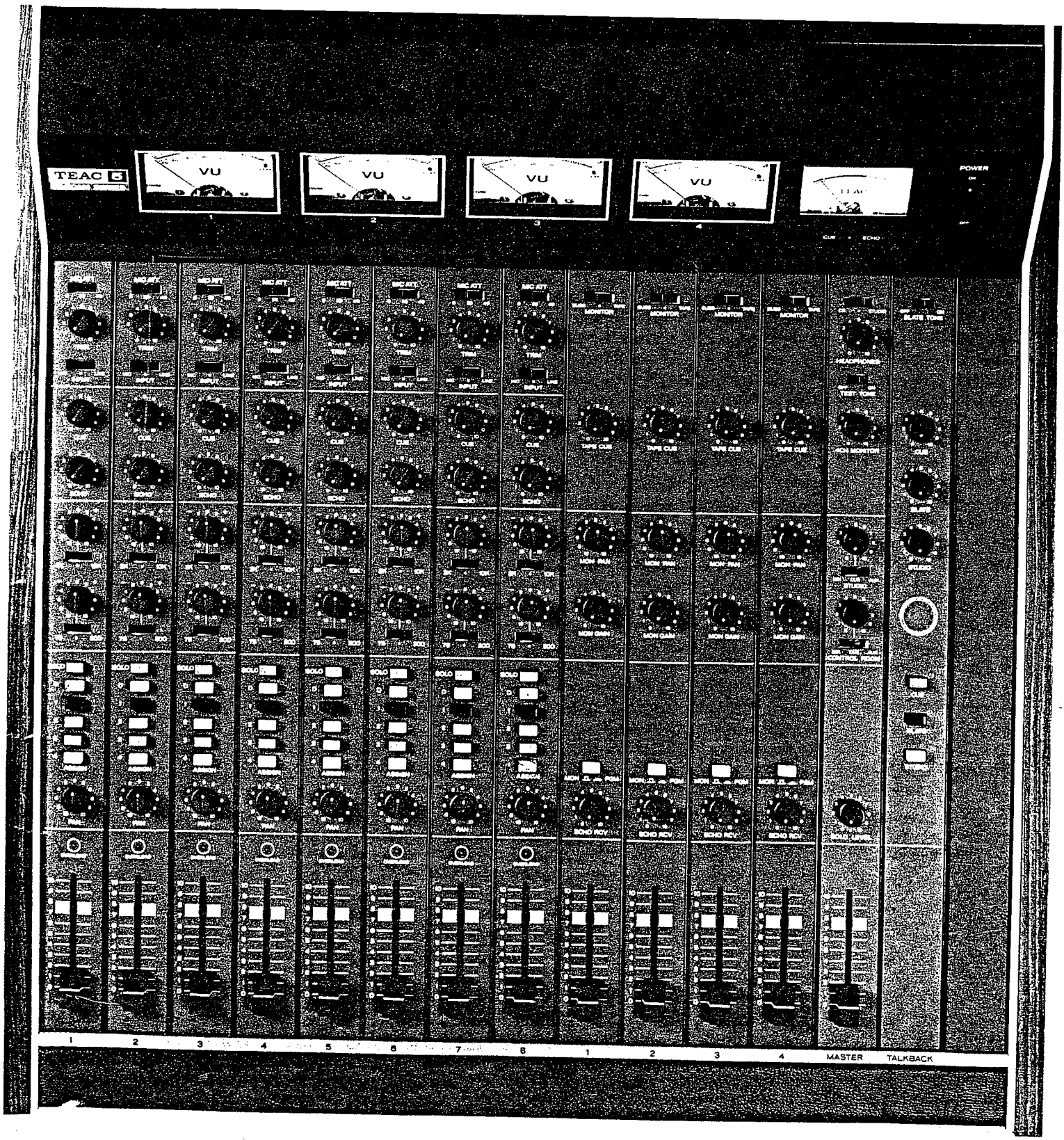

CONTENTS PAGE

Introduction 1
Section 1 —
The Controls: where they are and how they work.. 2
Input Module 2
Submaster Module 3
Master Module 3
Talkback Module 4
VU Meters 4
Section 2 —
Inputs and Outputs: where they're connected 5
Input Section 5
Output Section 5
Additional Inputs and Outputs..... 6
Section 3 —
Subsystems: controls that work together..... 7
Section 4 —
The model 5A goes P.A. 11
Block diagram 12
Specifications 13

WARNING

TO PREVENT FIRE OR SHOCK HAZARD, DO NOT EXPOSE THIS APPLIANCE TO RAIN OR MOISTURE

TEAC
TASCAM SERIES

Introduction

We designed the Model 5A to be as versatile as possible with the right combination of features and functions for people with more talent than money. For home studio recording or on the road for PA, the Model 5A just about does it all. And it's with a certain pride that we now begin to tell you how it works, and some of the many things you can do with it.

This manual has been, as they say in the trade, human engineered. What that means is that it's been designed by people with people in mind. We have had to assume a familiarity on your part with mixers in general. Otherwise, we'd be authoring a major text on the subject.

As you read through the manual, we suggest you pull out the back cover (it unfolds) and keep the block diagram visible so you can refer to and picture the signal flow as you read the descriptive text.

Section 1 describes the controls, where they are and what they do—individually. Section 2 describes the inputs and outputs—where to make the connections for other gear. Section 3 describes the interrelationships of certain switches, knobs and jacks which operationally form subsystems.

These first three sections are written with a recording application in mind—typical interface situations. Section 4 is an operational description of the Model 5A in a PA application (now you can change modules without turning off the power).

No manual is ever perfect, especially for as versatile a product as the Model 5A. So if you'd like to have some additional information, try some of the sources listed below or contact your dealer or us. Please enjoy and make good music—that's what it's all about, for all of us.



A. Home Made with TEAC. An LP we produced on a 3340, a 3300 and a Model 2. It talks about how multitrack recording has influenced music, and how you can record at home. It's filled with tips on mic placement, echo, reverb, acoustics and the like. Available through your TEAC retailer or from us directly.

B. The White Paper. An informative 24 page booklet about the technology of tape recorders. Helps you understand bias and equalization, metering systems, and the important interrelationships of the critical performance parameters. Available from your TEAC retailer, or from us directly.

C. *Modern Recording Techniques.* An excellent introduction to the equipment, controls and techniques used in modern studio recording. Written by Robert Runstein and published by Howard W. Sams & Co., Inc. Used as a text in seminars offered and the available thru The Recording Institute of America, Inc., 15 Columbus Circle, New York, NY 10023.

D. TAB Books, Blue Ridge Summit, PA 17214. Many fine publications covering subject material from general electronics theory to specific recording topics, including a thorough explanation of Setting Up and Using a Multi-Channel Recording Studio, by F. Alton Everest (#781; publication: fall, 1975). Write to publisher for catalogs and information.

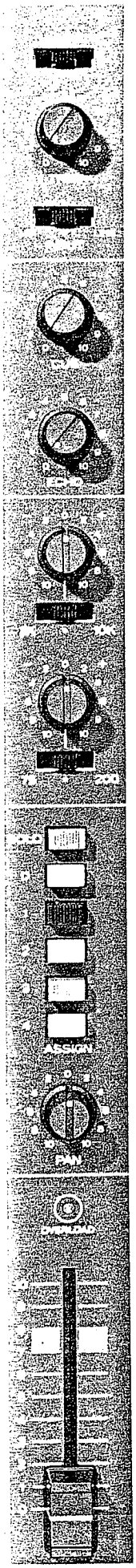

Section 1.

The Controls: where they are and how they work.

Input Module

Attenuation

A 3-position switch for 0, 20 or 40 dB of padding for mic signals. The pad is located before the mic transformer and preamp to help prevent them from being overdriven, a common cause of distortion.

Trim

A rotary pot that provides from 0 to 20 dB of continuously variable gain reduction for mic, tape or line signals.

Input Selector

A 3-position switch that determines the signal to be passed — mic or line. The center position on inputs 1 thru 4 is for tape reproduce from the outputs of a 4-track recorder patched into the *tape in* jacks on the back panel. The center position on inputs 5 thru 7 is off. On input 8, the center position works in conjunction with the built-in test oscillator on the master module for setting levels and general calibration.

Cue

A foldback pre EQ and fader, typically used in conjunction with tape cue (on the submaster modules) as a 12 x 1 independent submix for the musicians' headphones.

Echo

A foldback post EQ and fader, before the channel assignment, typically used for echo send to an external reverberation unit. Echo receive is on the submaster modules.

EQ

The peak and dip equalizers provide 15 dB of boost or cut, continuously variable, at the following frequencies: 3 kHz or 10 kHz, selectable; 75 Hz or 200 Hz, selectable. The center position is off.

Channel Assignment

Solo allows you to monitor selectively any of the 8 active input channels to the exclusion of all others. Depressing the momentary button does not affect the program buss — solo is a function of the control room monitor circuit only. The signal is post EQ and fader.

D is a direct output post EQ and fader when it is desirable to by-pass the summing amplifiers in the submaster modules.

The color-coded, numbered channel assignment buttons allow any signal to be assigned to any or all of the four output busses.

Pan

Whenever more than one output is assigned, pan is automatically engaged. The apparent acoustic image of those signals may then be placed at its desired position within the panoramic perspective. Rotating the pan control counter clockwise moves the acoustic image toward the monitors connected with the lower numbered output busses. Clockwise to move the image to the higher numbered busses. In most situations, you'll be panning in stereo — between the left and right monitor — but you can create some interesting effects by selecting 3 or all 4 assignment buttons in a 4-channel monitoring application. (See the diagram). In the normal situation, say between 1 & 3, you will notice approximately a 3 dB drop when the pan control is centered (0), the signal distributed equally between the monitors. This dip compensates for what would otherwise be an audible peak in the center. So as you move the apparent acoustic image from extreme left to extreme right you will notice a smooth, even pan.

Overload

The LED overload indicator is after attenuation and trim, before the equalizers and fader. When the LED ignites, the first input stage is being overdriven and the attenuator/trim controls should be adjusted accordingly.

Straight Line Fader

Regulates the overall send level of that input module. The shaded grey area on the fader scale represents the relatively optimum operating range of the fader — it is not a critical reference.

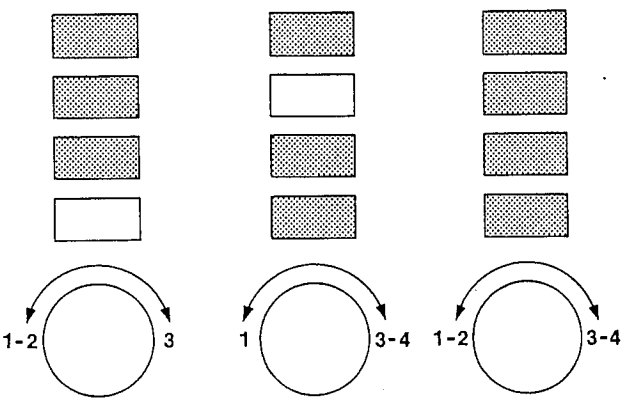

Typical examples of multi channel panning



Submaster Module

Buss Tape Monitor

Determines the signal to be sent through the control room monitor circuit. *Buss* is the program mix (line output) of the Model 5A. *Tape* is for reproduce (line out) of the 4-track recorder connected to the *Tape In* jacks on the back panel.

Tape Cue*

With the 8 input cue level controls, these 4 controls provide an independent 12 x 1 mix, typically for the musicians' headphones, of previously recorded tracks with the program material to be overdubbed.



Monitor Pan and Gain*

This section of the submaster modules is another independent submix (4 x 2), typically for the control room monitors. Without affecting the program mix, each of the 4 monitor busses may be individually adjusted for pan and gain to provide the operator with the desired stereo monitor mix.

*These controls work in conjunction with the Studio Select and the Control Room Select switches on the master module.



Echo Receive

The rotary level control determines the amount of reverberated signal you wish to add to a given output channel. The up position of the button allows you to hear echo receive over the control room monitor circuit only; in the down position, the reverberated signal is sent to the program buss as well.



Submaster Fader

Determines the overall level for a given program buss. Normally the Submaster Faders will be set in the grey, shaded areas, but it is not uncommon at all—especially if the selection and assignment of the inputs has been carefully thought out—to make dynamic adjustments on the Submasters during the recording process in order not to disturb the premix of two or more inputs assigned to a given submaster.

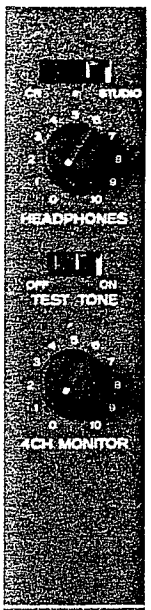

Master Module

Headphone Select/Level Control

The front headphone jack output is controlled by this 3-position switch and the rotary pot.

On the 3-position switch, CR stands for control room monitor, STUDIO the studio feed monitor, and at center position there will be no output at the headphone jack.

Regardless to setting of this 3-position switch, monitoring of SOLO will always be given priority when the SOLO button is depressed.

Test Test

In the *on* position, a 400 Hz tone will be on input 8 (input selector, center position). The fader and trim controls will determine the level of the test signal which may be assigned to any or all output busses for setting levels and general calibration.



4-channel Monitor

A 4-ganged pot for overall level control of quadriphonic material, used in conjunction with the individual channel monitor outputs on the back panel.

Note: In determining the suitability of this circuit for a specific application, refer to the block diagram and note that the slate and solo functions are not accessible on this 4-channel monitor circuit.

Studio Monitoring

A 3-position switch with a level control to send the monitor *mix* (4 x 2 monitor submix), the *cue* send (input cue and tape cue), or *aux* (a stereo return, typically from the 2-track mixdown recorder) to the studio monitors or headphones.

Control Room Monitoring

A 3-position switch with a level control for selective monitoring of the *mix* (4 x 2 monitor submix), the *cue* send or the *aux* return (see above).



Solo Level

Determines the level of the signal you wish to monitor via solo so that you can adjust the solo level relative to the regular monitor level.

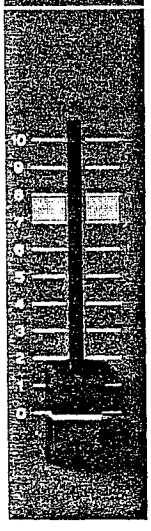

Master Fader

A 4-ganged pot for the overall level control of the Model 5A program line output.

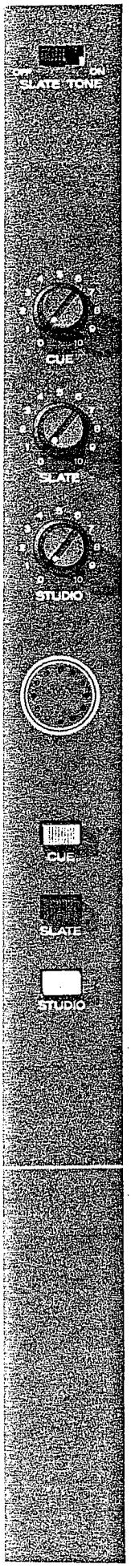

Talkback Module (optional)

Slate Tone

A 60 Hz tone is sent to the program line outputs when the oscillator is switched on and when the slate button is then depressed. In fast wind modes the tape recorder will reproduce that tone as a high pitched bleep—thus facilitating search and cueing.

Built-in Mic

3 momentary buttons, each with its own level control direct the operation of the mic.

Cue: enables the operator's voice to appear on the cue buss (musicians' headphones).

Slate: always mutes the control room monitors and allows the operator's voice to appear on the program buss—normally in order to identify the tune or take number.

Studio: operator's voice is sent to the studio talkback speaker (internal 1 W amp provided).

VU Meters

The VU-type level averaging meters are complemented with fast acting LED peak indicators. Together they provide an excellent medium for visually monitoring output levels. But remember that your ears have to be the final judge of what your eyes see. The fifth meter can be switched to read either the echo send level or the cue send level.

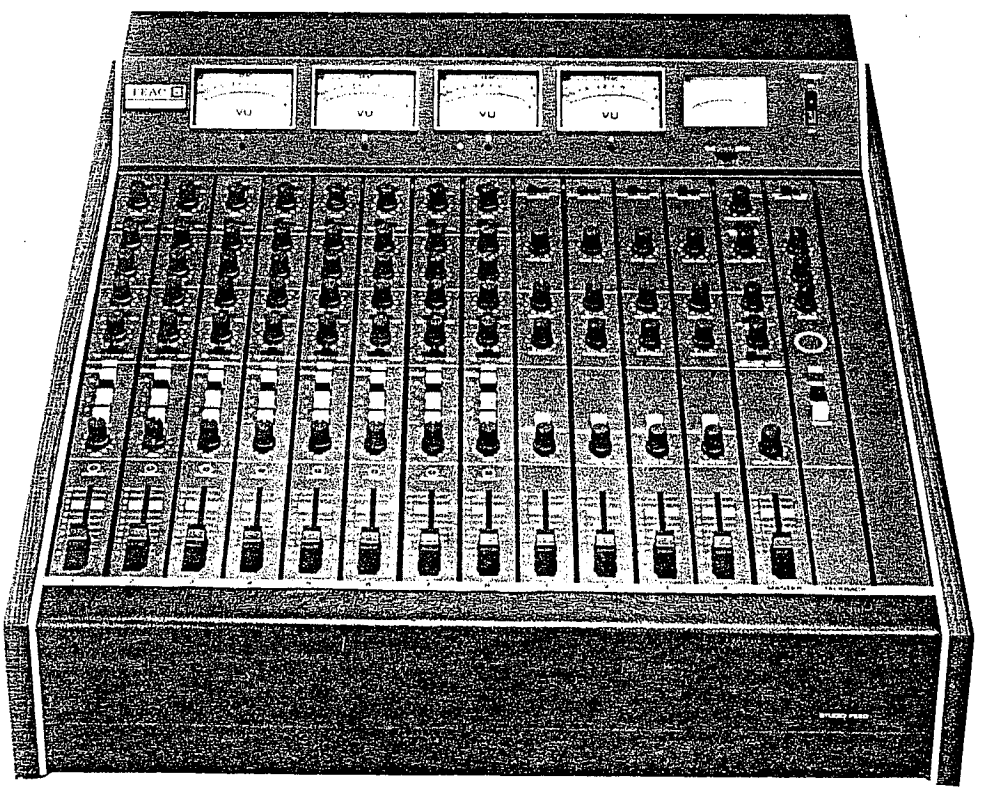

Section 2.

Inputs and outputs: where they're connected.

Please refer to the specifications, p.13 for nominal levels and impedances of the Model 5A inputs and outputs. Some external equipment interfacing may require the addition of line amplifiers and/or transformers.

Input section (typical of 8)



Accessory send/receive

This patch point is pre channel assign, post EQ and fader, and is typically used with external graphic equalizers, limiters, etc. Connect a cable from the *send* jack to the input of the device you're using—then from its output to the *receive* jack. These and all other RCA jacks are chassis mounted.

Important: When the accessory send/receive patch point is not in use, be sure the strapping plugs are properly connected.

Direct Out

Corresponds to **D** on the input module. When this button is depressed, the signal coming into that module is sent to the direct out jack—pre channel assign, post EQ and fader.

Line In

For a nominal high impedance line level source.

Mic In

Low impedance balanced mic input with XL-type connector.

Output Section (typical of 4)



Echo Receive

These inputs are controlled by the echo receive switch (see page 3 for an explanation of how it works). Connect the outputs of your reverberation device to the appropriate channel(s) for echo receive.

Buss In

Normally used to provide a line level input to the program buss after the channel assign network for adding other signal processing devices. Additionally, these inputs can be used to cascade two Model 5A's together—where the line outputs of one Model 5A would be connected to the buss inputs of the second.

Tape In

Connect the outputs of your 4-track tape recorder to these jacks.

Monitor Out

For 4-channel (quadriphonic) monitoring, connect these outputs to the appropriate inputs of the amplifiers driving the 4-channel system.

Level

This switch determines the program line output level. Low is −10 dB (.3 V); high is −2 dB (.775 V).

Aux Out/Line Out

The program busses of the Model 5A provide two jacks in parallel for each of the four outputs. You have the added flexibility of being able to send the signal to two places without an external Y patch.

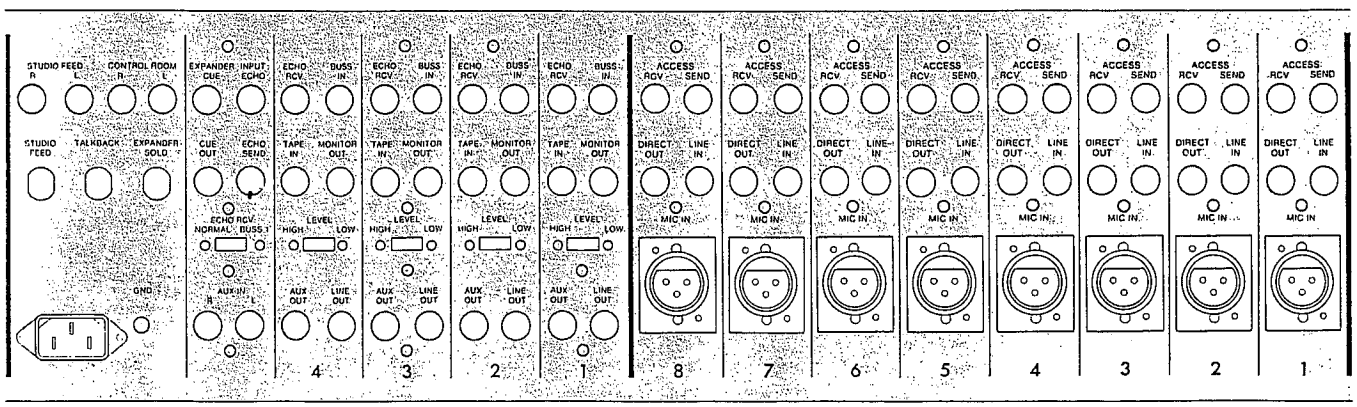

Additional Inputs and Outputs

Expander Input

These jacks, labeled Cue, Echo and Solo enable you to cascade two Model 5A's together, and would be fed respectively by the cue out, echo send and solo of the other board.

Note: Cascade connection of second mixer

1) Connect the main mixer EXPANDER INPUT. CUE pin jack with an auxiliary cable to the CUE OUT pin jack on the second mixer to be cascaded.
2) Connect the main mixer EXPANDER INPUT ECHO pin jack to the ECHO SEND pin jack on the second mixer in the same way.
3) Plug in the phone plug (Side A, diagram below) to the main mixer EXPANDER SOLO jack, and the phone plug on the other end (Side B) to the second mixer EXPANDER SOLO jack, and RCA pin plug to the CONTROL ROOM (MONITOR) L pin jack, also on the second mixer.

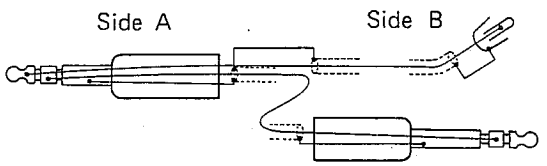

Cue Out

The summed monaural output of the cue buss (input cue plus tape cue). It is independent of the studio feed.

Echo Send

The summed monaural output of the echo buss, most frequently connected to a reverberation device.

Echo Receive Switch

In the normal position, the output(s) of your reverberation unit(s) will be connected individually to the particular channel desired. In the Buss 1 position, the output from a single reverberation device may be connected to the echo receive jack on Buss 1, and then internally distributed and presented to the four program busses. Echo receive level, of course, is always determined by the appropriate rotary control on the submaster module.

Control Room

Usually these outputs will provide the main stereo feed for the control room monitors. The signal presented at these terminals is determined by the 3-position switch on the master module marked *Control Room.*

Aux In

In a typical application, the outputs of your stereo mixdown recorder would be connected here. Then you have the ability to monitor the mixdown through either the control room or studio monitor circuits (or both) without having to re-patch.

Talkback

A phone jack for direct connection to a studio talkback speaker if the optional talkback module with a 1 W amplifier is used.

Studio Feed (Phone jack)

Headphones can be connected directly to these jacks—a 1 W amplifier is provided internally—and the signal presented at these outputs is determined by the Studio Select switch on the master module.

Studio Feed (Phono jack)

When a number of headsets will be used, and more power is required, connect these line level outputs to the inputs of the amplifier.

Ground

Common grounding point for the Model 5A is required. If you're confronted with hum or RF problems when system connections are completed, take this grounding point and experiment with different terminations such as cold water pipes, other chassis, etc. While we cannot claim the Model 5A is absolutely RF-proof, we do know it works satisfactorily in a number of installations in relatively dense RF fields. If you do have RF problems it may be because of interconnection errors, lack of proper ground system, or a dense RF field.

Power

The AC mains should be 117V, 60 Hz. (200V, 220V—240V, 250V, 50 Hz/60 Hz) The Model 5A only draws 40 Watts from your local electric company. All connections of external equipment should be made prior to plugging in the Model 5A.

Note: It is possible to remove modules with the power on, just be careful.

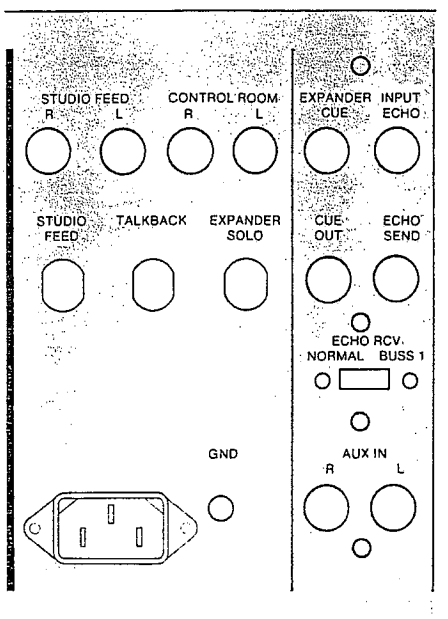

Section 3.

Subsystems: controls that work together.

By this time you've probably noticed that various groups of controls, inputs and outputs form distinct sections and individual functions that the Model 5A provides. This section of the manual is devoted to the description of these subsystems. We've reproduced appropriate portions of the block diagram within the text to help give you a clearer picture of the signal flow involved. Whenever you find it helpful, of course, relate any particular section to the full block diagram on the back fold-out. The more familiar you are with the signal flow of the Model 5A, the more versatile it is likely to become.

12 x 1 Cue Mixer

All of the various cue controls and connections form the 12 x 1 Cue Mixer: Eight input cue controls, and the four tape cues on the output modules form the level adjustments of the mix with the mono mix exiting at *cue out* on the back panel. The fifth meter can be switched to measure the cue send level. Additionally, cue can be monitored in two places—the studio and the control room, through operating the control room and studio select switches. The overall level at each of these points is controlled by the particular rotary pot desired.

Input level controls and indicators.

The mic attenuator, trim pot, LED overload indicator and input fader all work together to maintain the optimum operating range of the input signal. The practical parameters of distortion, signal-to-noise and headroom are determined by these controls. You'll adjust them often. As an example, suppose you have a mic in input 1, your fader is set in the shaded grey area, the attenuator is at −20, the trim pot is in the full counterclockwise position, and output 1 is assigned. The overload indicator then ignites, so you switch the attenuator to the −40 position. The LED overload indicator has stopped flashing, but now your average VU deflection is about −15. You could open the fader all the way, but a better adjustment would be to rotate the trim pot clockwise until your average VU deflection at 0 places the fader in a more optimum operating range.

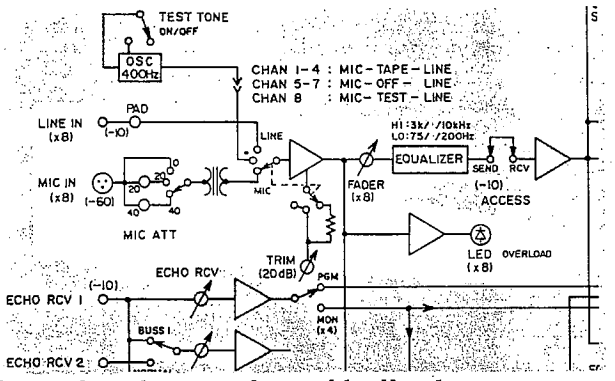

Input level controls and indicators

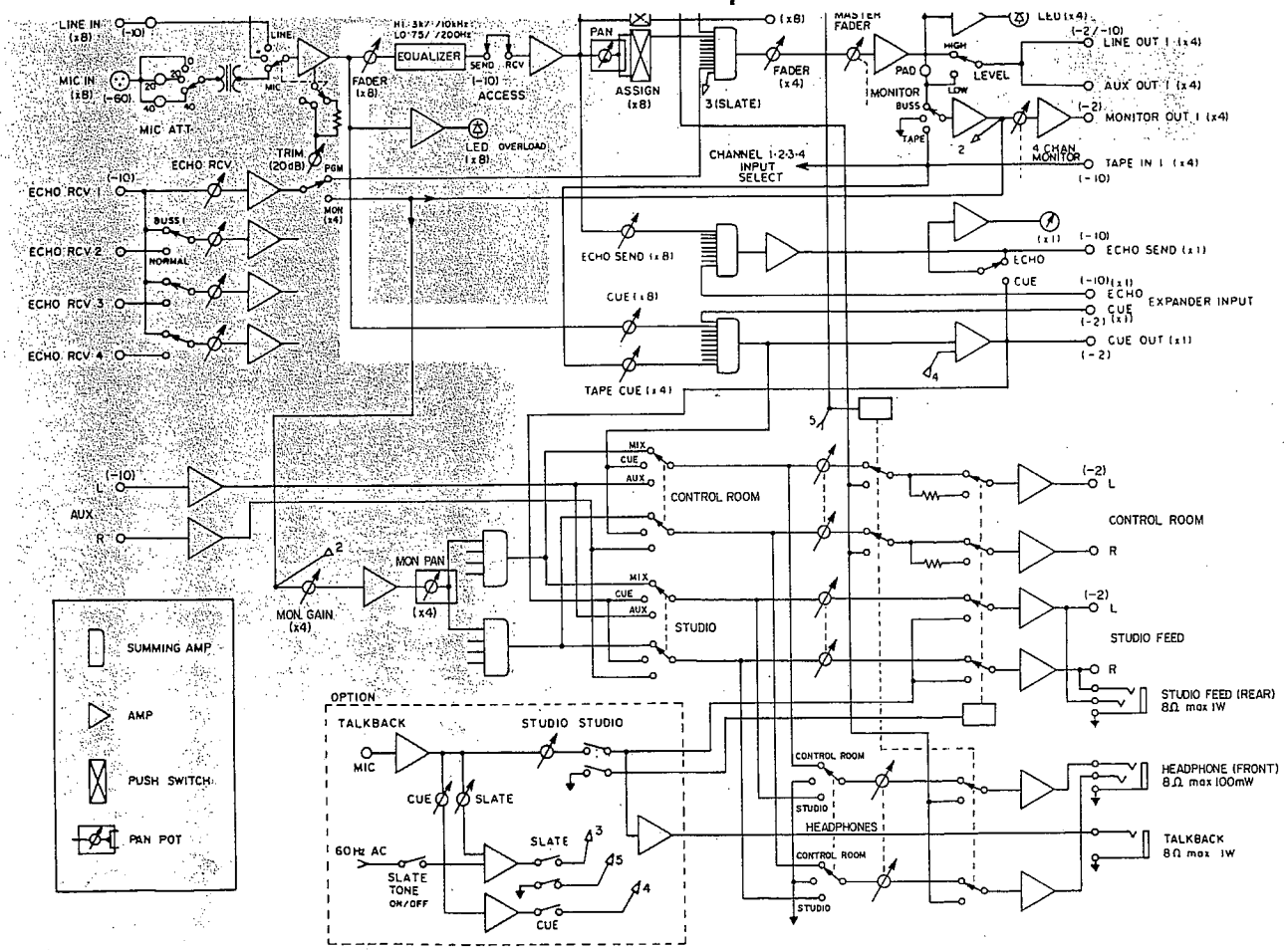

12 x 1 Cue Mixer

Equalization

You have 4 selectable frequencies per input, each of which can be boosted or cut 15 dB. You can see from the characteristics of the slopes that frequencies other than the one selected are obviously affected. We've included a chart of the frequency response characteristics of some common musical sounds, so you can get an idea of how these tone controls can be put to their best artistic advantage. Of course, using them and hearing the results will tell you exactly how they work.

Channel Assignment & Pan

Assigning more than one output channel automatically engages the pan control. The apparent acoustic image may then be placed at its desired location within the panoramic perspective.

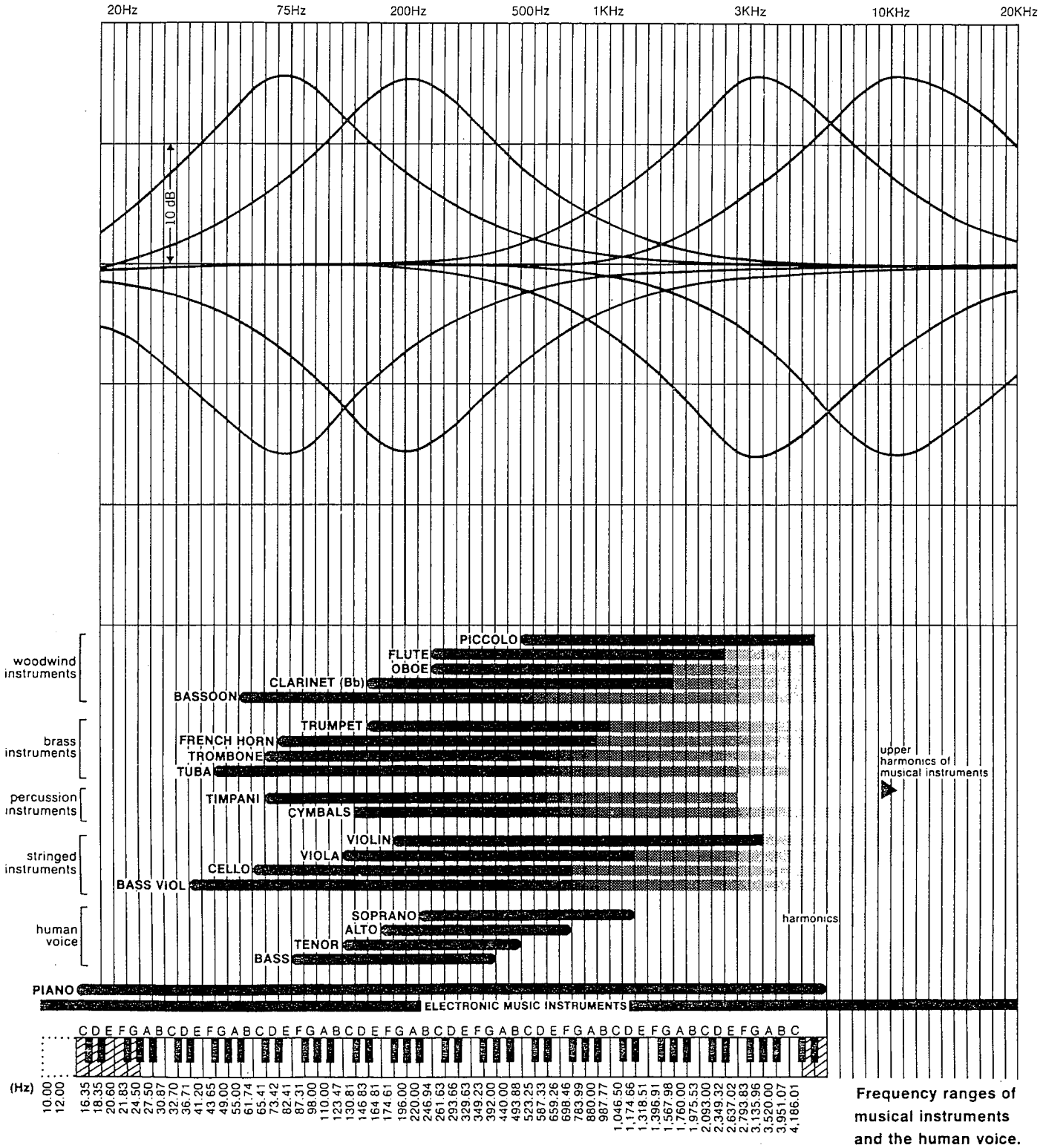

Frequency ranges of musical instruments and the human voice.

Echo System

Echo send, echo rcv, echo send and rcv jacks, the echo rcv switch, and the monitor/program button form the echo system.

Note: Echo Send is post EQ and faders, therefore any EQ and level adjustments made to the program appear on Echo Send.

The fifth meter can be switched to read the echo send level. Echo rcv can be switched to appear on all four busses by using the Buss 1 position. Or receive can be assigned to any buss individually via Normal. Echo return can be made to appear only on the monitor circuit by having the mon/prgm button in the up position. Depressing this button sends the signal to the program buss.

Note: The amount of reverberated material added to the program buss will affect the overall output level for that channel.

Submaster Controls and Outputs

The submaster faders, meters, LED's, Line Outs, Aux Outs, Hi/Lo Level Switch, and the Buss/Tape Monitor Switch compose the Submaster System. The faders working in conjunction with the VU meter and LED's help bring the mix to the proper level. The signal is of course assigned to the particular submaster fader by the channel assignment switches located on the input modules. The signal from the submaster system exits through Line/Aux Out. The level at these outputs is determined by the Hi/Lo Level Switch. The Buss/Tape Switch determines which mix will be going to the control room or the studio monitors. Buss indicates the current program output of the Model 5A, and tape is reproduce from your tape recorder.

The Master Fader then acts as the overall level control for the line output of the Model 5A.

Echo System

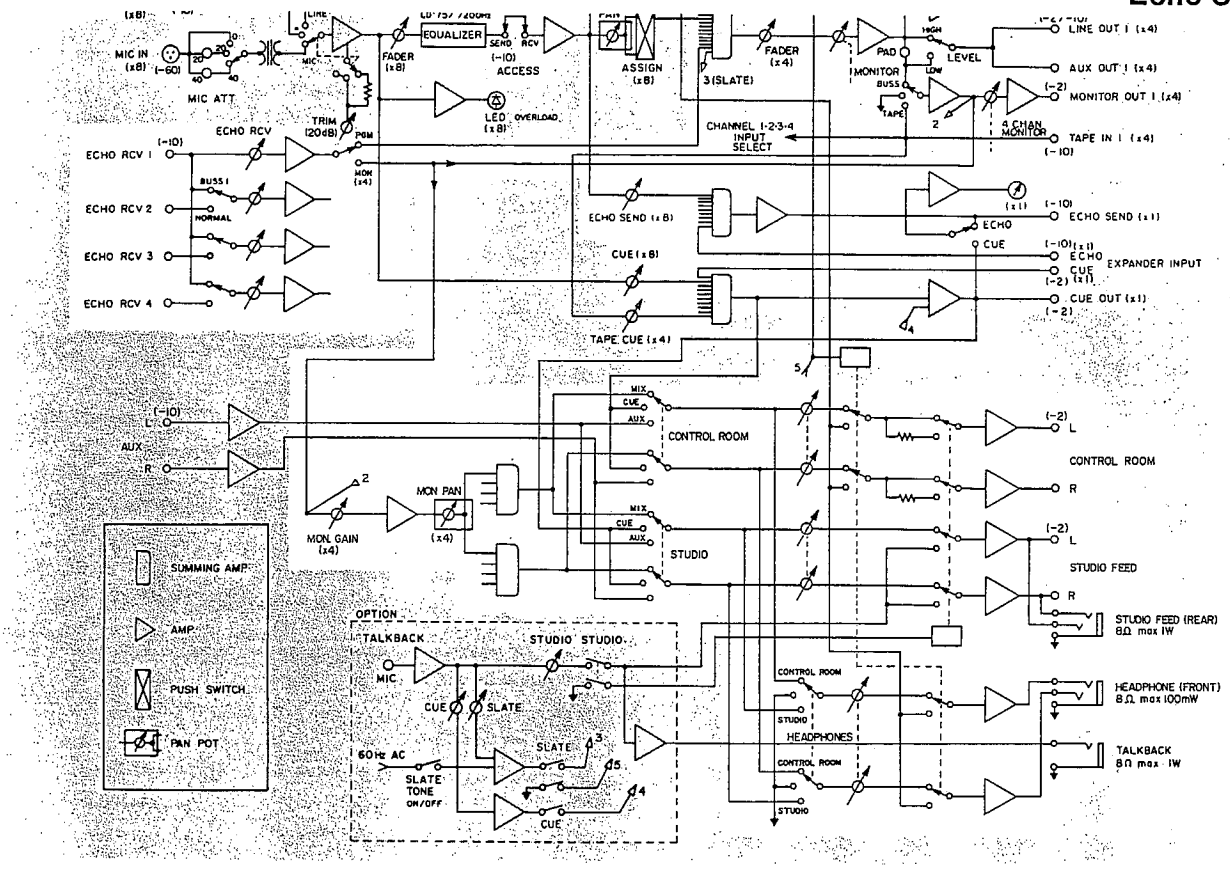

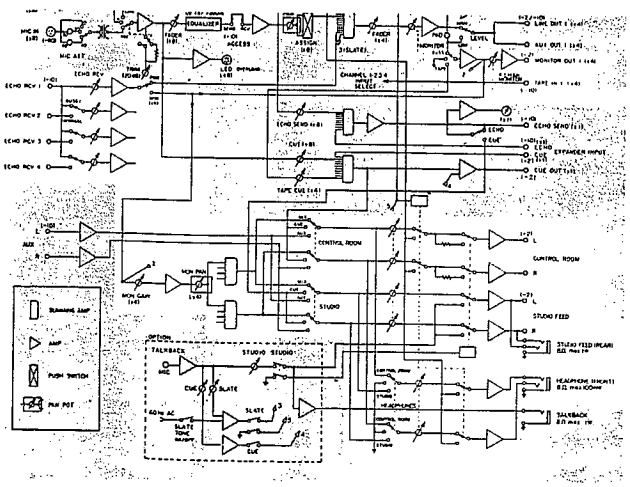

Monitoring System

Monitoring System

A stereo mix is obtainable through the monitor system via the outputs marked Control Room on the back panel. This mix is determined by the monitor pan and gain controls. Flexible switching makes this mix available in two places: the control room and the studio. Using the switches on the master module described as Studio/Control Room Select, the operator is able to monitor the program material or the tape recorder directly (Buss/Tape Switch). This is your 4 x 2 Monitor Mixer. It should be recognized at this point that there is a distinct difference between the monitor pan and the pan on the input module. True, they do interact; but the two are independent. The input pan effects the program material, while the monitor pan effects the monitor only.

Submaster Controls and Outputs

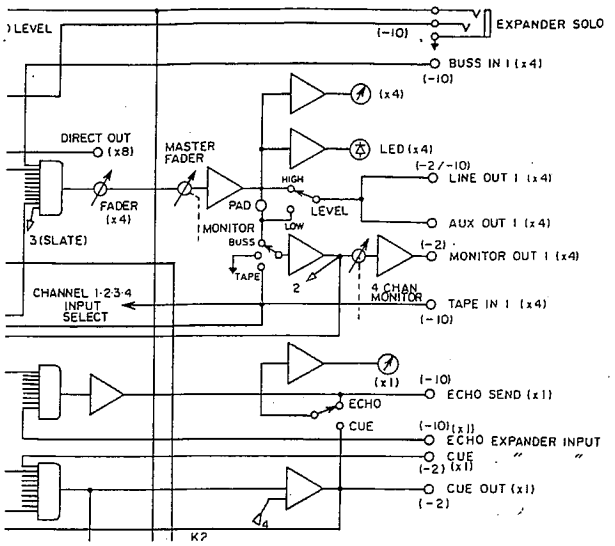

E.G. #1. You're recording your trap set with 5 mics in a stereo mix. You've selected 2 and 3 on your input modules 1-5. This automatically engages the input pan. The monitor pans on 2 and 3 submaster modules are set as follows: Channel 2 monitor pan at full counter-clockwise position and channel 3 is set full clockwise. You can now place the acoustic image at the desired location using the input pan. Kick then is at center with the hi-hat on the right and the floor toms on the left. If the monitor pan controls were set at "12 o'clock" you would effectively be monitoring the trap set in mono, even though you would be printing in stereo via tracks 2 and 3.

E.G. #2. You have your basic track laid and now you want to overdub four instruments: lead, acoustic fill, tambourine, and bongo at the same time. They are being miced on four inputs, and each is being assigned to a separate output. So each instrument is being recorded on a separate track. Even though your input pan is not functioning (more than one output assigned per channel to engage pan) you can still monitor the overdub in stereo. Just use monitor pan to place the instruments where you want them. Pan enables the operator to hear whatever he wants regarding the placement of the acoustic image, whether it be on the program buss or the monitor buss.

Note: Be sure to maintain a relative balance between the monitor speaker levels and the program buss outputs, otherwise you'll end up with distorted or hissy tapes.

It is also possible to monitor quadriphonic material, through the use of the individual monitor outputs. The overall output level is then regulated by the four-channel monitor pot (master module), and the 4 x 2 stereo monitor mixer is then by-passed.

Test Tone

When the test tone oscillator on the master module is switched on and the input selector switch on channel 8 is in the center position, the 400 Hz tone may then be assigned to any or all output busses. The level of the test signal will be determined by the trim pot and fader of input 8, as well as the submaster and master level controls. Perhaps the most typical use of this test signal is to reference the Model 5A's 0 VU deflection with your tape recorder. For more critical alignment procedures, an external oscillator is recommended.

Solo

The solo system allows you to monitor individual or combinations of input channels to the exclusion of all others without disturbing the program mix. Solo is a function of the control room monitor circuit only, and the solo level control on the master module lets you adjust the solo level relative to the monitor level. While it is convenient to solo a given input and then make EQ adjustments, further tonal adjustments may be desirable when that signal is then mixed with other active inputs.

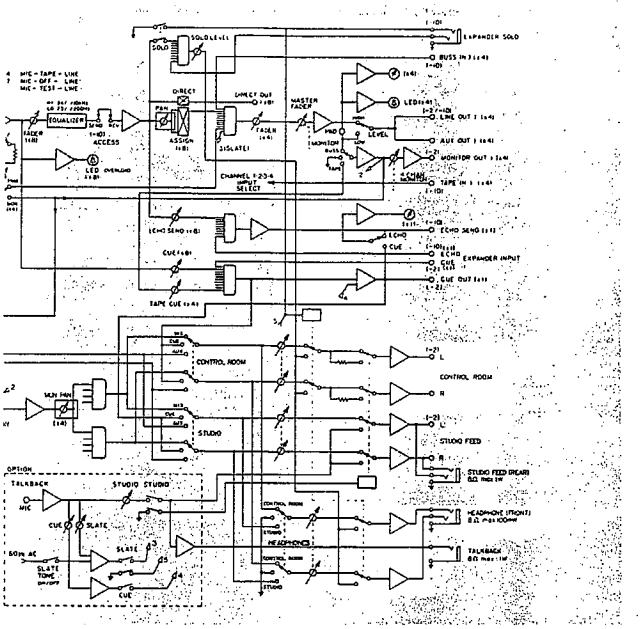

Solo

Test Tone

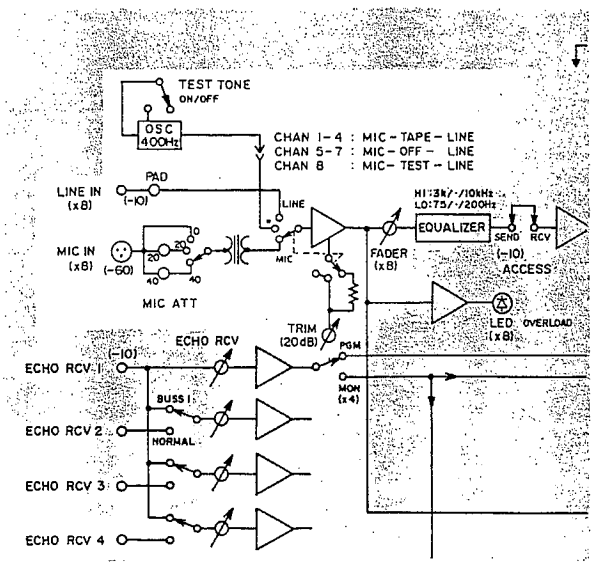

Direct

Each input signal can be assigned to a direct output when it is desirable to by-pass the summing amplifiers. In an 8-track recording application, for example, the 4 main outputs might be connected to tracks 1 through 4. Additional instruments could then be sent from the Model 5A directly to the remaining tracks. In that situation, you would have to monitor the additional direct sends via the recorder's meters—since the direct out signal leaves the Model 5A circuitry before the monitor section. Selecting direct out does *not*, however preclude further channel assignment selection. So you can use direct as another post EQ and fader send to an external device. If all your echo receive jacks are not in use, the return from that direct send can be patched into an available echo receive input—thereby giving you the option of placing the return on the monitor buss only, or the program buss as well through the mon/pgm switch on the submaster module.

Direct

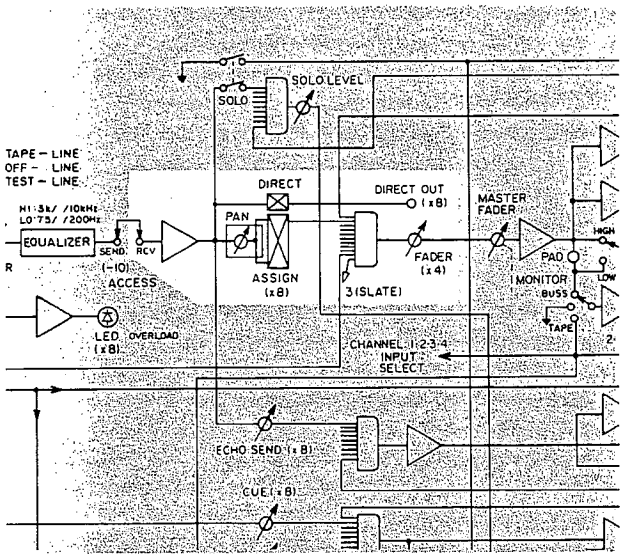

Tape in Jacks

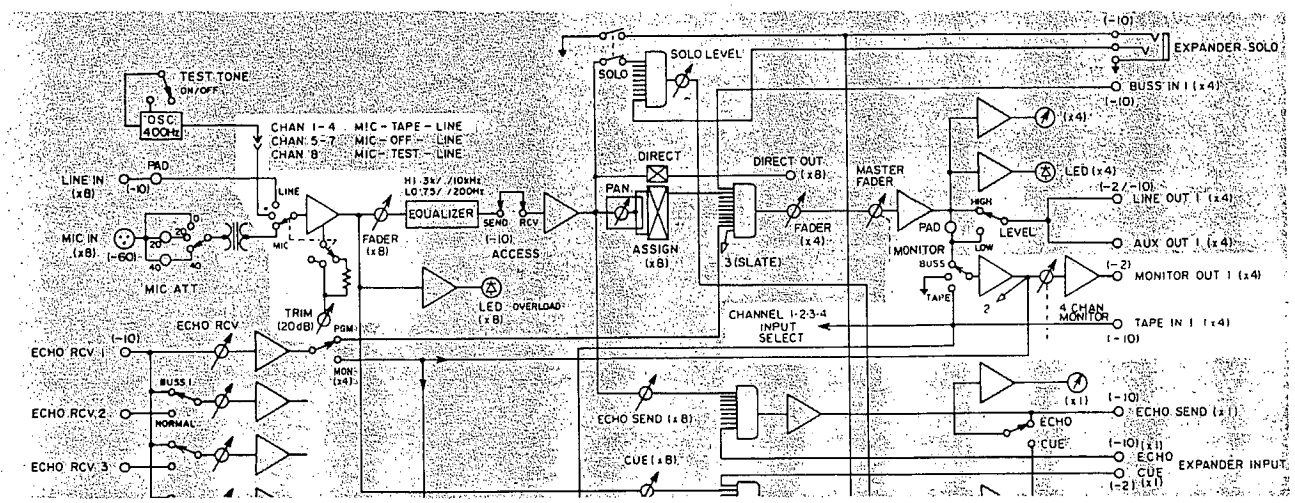

Tape in Jacks

Plugging your tape recorder into the tape inputs (located on the back panel) allows the signal from that recorder to appear in three places: the monitor circuit through the use of the Buss/*Tape* Switch, the first four inputs (1-4) by switching the Input Selector Switch to the center position, and on the cue buss using the Tape/Cue Level Control. The tape signal is always available for mixdown and the Tape/Cue Level Control, as this buss is totally independent of the others.

Section 4.
The Model 5A Goes PA!

Using your Model 5A for PA is not a difficult task. The initial design of the Model 5A was to incorporate this use. This, plus the versatility and portability, lend the freedom to make this move.

We've put together a basic system for setting up this mixer for PA. This is by no means meant to tie you down to a set way or procedure but rather a spur for your imagination and creativity.

However in the following examples we hope to introduce you to the concept of "signal flow" in order that you can tailor the Model 5A to your particular needs.

The days of the simple PA system are gone. No longer will it suffice to have many mics being mixed together and sent out over a single house amplifier. Now, there are needs for stage mixes (often many stage mixes), stereo house mixes, tape recording mixes, broadcast mixes, and an engineer mix. There will be a time where you might want a mix sent to a tape echo or reverberation chamber. In other words many different "submixes" are now necessary. The Model 5A provides these—IF YOU ARE AWARE OF SIGNAL FLOW.

As described in earlier sections, the Model 5A consists of various submixers: the normal input to program buss, input cue and tape cue buss, and the echo buss. There is also a monitor mixer that mixes the four program busses into a separate stereo mix. These are the mixes available to you. You can send them to various amplifiers or patch them back into various inputs on the Model 5A.

There are numerous inputs besides the mic or line inputs on the input modules. There are four buss inputs, four echo receive inputs (can be sent to the monitor mixer or to the four program busses), and lastly four tape inputs (can be sent to the first four input modules or to the monitor mixer).

Now that we've got you armed with this review of the inputs and outputs, let's set-up a typical PA system.

1. Connect your mics into the various inputs and assign them to outputs 1 and 2. This will be your house mix and the stereo image will be determined by the Pan on each input.

2. Connect the house amplifiers to Line Out 1 and 2.

3. Take a small patch cable and connect the Cue Out jack to the Buss In jack of Buss 3. This gives you a level control over the cue buss. You now have the house being controlled by Submaster faders 1 and 2, and one stage mix controlled by Submaster fader 3.

4. Connect the stage mix amplifier to Line Out 3.

5. If equalization is needed for this stage mix, then an external EQ unit should be patched between the Cue Out jack and the Buss In jack of Buss 3.

6. If reverberation is to be added to the house mix, then use the Echo controls on each input and connect the reverb unit into the Echo Send jack. Return the signal from the reverb unit to the Buss 1 Echo Rcv jack with the Echo Rcv switch in the Buss 1 position. The amount of reverb that is sent to the house or the stage will then be determined by the Echo Rcv level pots on each Submaster module.

7. If no reverb is needed, then this echo mixer can be used for an additional stage mix by patching the Echo Send jack into the Buss In jack of Buss 4.

8. Connect this second stage mix from Line Out 4 into a stage amplifier.

9. You now have two stage mixes. One is controlled by the Cue level controls and the Submaster fader 3, and the other is controlled by the Echo level controls and the Submaster fader 4. This particular stage mix is after the EQ and input fader section. The level and EQ that you do on the various inputs will affect this second stage mix.

10. A third mix can be derived from the monitor mixer located on the four Submasters. This mix could come from busses 1 and 2. You would not be able to create a completely new mix, for the stereo image has already been determined on busses 1 and 2, but you would have control over the overall level sent from this new mix.

11. Set the Monitor Pan on the Submaster 1 counterclockwise and the Monitor Pan on Submaster 2 clockwise. Bring the two monitor gain controls all the way up.

12. Select "Mix" on the Studio select switch and connect the Studio Feed outputs to wherever you want this new mix. For example: a stereo tape deck, broadcast, and perhaps a third stage mix. The overall level would be determined by the Studio level control.

13. You will probably want to check the various mixes (generally through headphones) and also want the ability to locate various mics on stage through the use of the Solo buttons.

There are many different approaches to connecting the Model 5A into a PA system. This is only one. You have to decide what mixes you want, where you want them to go, and how many you need. Be a little creative and you will probably find out it can be done with the Model 5A.

If you run into any problems or find interesting solutions, let us know, we would like to hear from you.

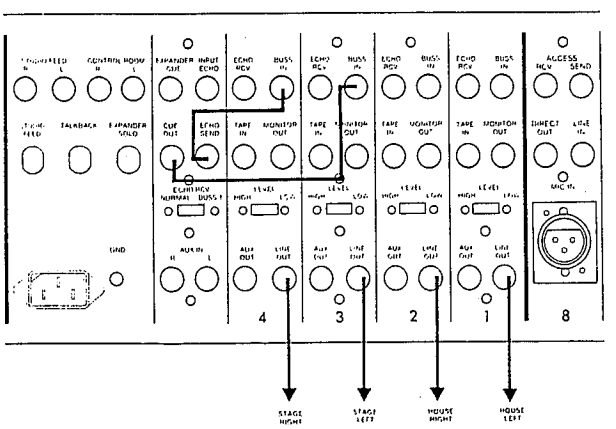

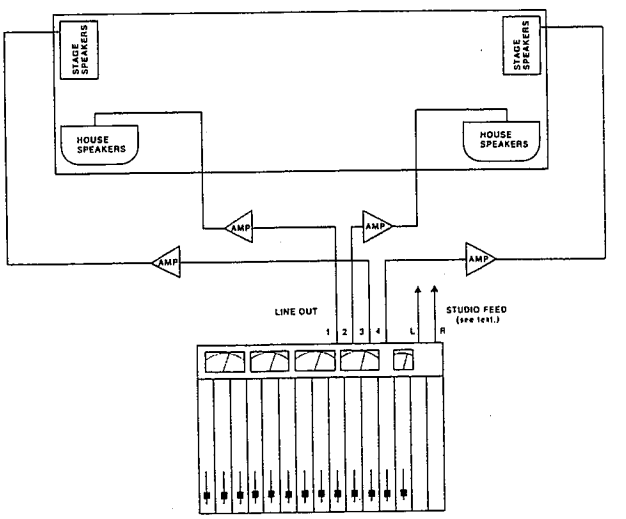

Model 5A Specifications

1. 8-in/4-out	
2. Input selector	Chan 1-4 Mic/Tape/Line Chan 5-7 Mic/Off/Line Chan 8 Mic/Test/Line
3. Mic input	
1) Mic impedance	200 ohms
2) Nominal input level	−50dB (3mV)
3) Minimum input level	−72dB (250μV)
4) Maximum input level	+25dB (17.8V)
4. Line input	
1) Line impedance	Greater than 50K ohms
2) Nominal input level	−10dB (0.3V)
3) Minimum input level	−26dB (50mV)
4) Maximum input level	+30dB (30V)
5. Line output/Aux. output	
1) Load impedance	Greater than 10K ohms
2) Nominal output level	−10dB (0.3V), −2dB (0.78V) switchable
3) Maximum output level	+18dB (7.8V)
6. 4 channel monitor output	
1) Load impedance	Greater than 10K ohms
2) Nominal output level	−2dB (0.78V)
3) Maximum output level	+18dB (7.8V)
7. 2 channel monitor output (for control room and studio)	
1) Load impedance	Greater than 10K ohms
2) Nominal output level	−2dB (0.78V)
3) Maximum output level	+18dB (7.8V)
8. Frequency response	30Hz −20KHz, ±2dB
9. Equivalent input noise	125dB
10. Signal to noise ratio, overall (measured at nominal input levels)	
1) One input (mic or line)	Greater than 75dB WTD 70dB UNWTD
2) 8 inputs (mic or line)	Greater than 65dB WTD 60dB UNWTD
11. Equalization	Peak and dip type, ±15dB continuously variable Hi band−3KHz-10KHz switchable Lo band−75Hz-200Hz switchable
12. Crosstalk	Greater than 60dB (at 1KHz)
13. Distortion overall (mic input to output)	0.1% THD maximum
14. Fader attenuation	Greater than 60dB
15. Send and receive data	
1) Accessory send level	Nominal−10dB (0.3V) into 10K ohms or higher
2) Accessory receive level	Nominal−10dB (0.3V) into 10K ohms or higher
3) Echo send level	Nominal−10dB (0.3V) into 10K ohms or higher
4) Echo receive level	Nominal−10dB (0.3V) into 10K ohms or higher
16. Auxiliary input, Bus input, Tape input	
1) Input impedance	Greater than 10K ohms
2) Nominal level	−10dB (0.3V)
17. Solo input (for Expander Module)	
1) Input impedance	Greater than 10K ohms
2) Nominal level	−10dB (0.3V)
18. Echo input (for Expander Module)	
1) Input impedance	Greater than 10K ohms
2) Nominal level	−10dB (0.3V)
19. Cue input (for Expander Module)	
1) Input impedance	Greater than 10K ohms
2) Nominal level	−2dB (0.78V)
20. Cue output	
1) Load impedance	Greater than 10K ohms
2) Nominal level	−2dB (0.78V)
21. Direct output	
1) Load impedance	Greater than 10K ohms
2) Nominal level	−10dB (0.3V)
22. Headphone	
1) Load impedance	Greater than 8 ohms
2) Maximum output	100mW
23. Studio feed	
1) Load impedance	Greater than 8 ohms
2) Maximum output	1W
24. Power requirements	117V (200V, 220V—240V, 250V.) AC, 50/60Hz, 40W
25. Dimensions (WHD)	23⅛, 7½, 24½
26. Weight	62 lbs.

Block diagram

