INSTRUCTION MANUAL

TEAC Tascam Series
MODEL 15 AUDIO MIXER

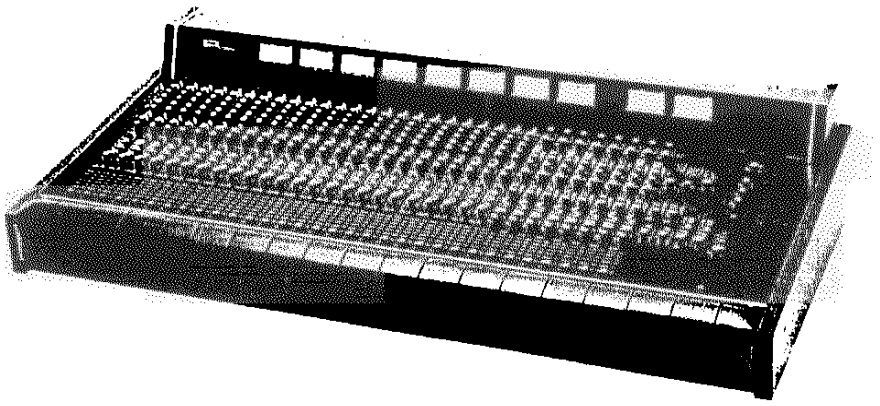

CONTENTS

1. INTRODUCTION TO THE MODEL 15 1

2. IMPEDANCE MATCHING
—OR, WHAT PLUGS INTO WHAT 2
Mathematical Formulas 3
QuickTest for Safe Loads without using Test Gear 4

3. THE MODEL 15 FROM MIC IN TO LINE OUTS
3.1 INPUT MODULE
Mic In XLR Connectors 4
Mic ATT Switch 4
Line In Jacks 4
Input Select Switch 4
Trim 5
Overload L.E.D. 5
Accessory Send/Receive Jacks 5
Equalization Controls 6
Aux 1 and Aux 2 Pre-/Post-Fader Function ... 6
Input Fader 6
Direct Out Jack 6
Solo 7
Pan Pot and Buss Assignment 7
Mute 7

3.2 BUSS MASTER MODULE
Buss In Jacks 8
Buss Trim 8
Accessory Send/Receive Jacks 8
Buss Master Fader 8
Tape as source 8
Buss as source 8
Monitor Pan 8
Aux 3 and Aux 4 9
Echo Receive Section 9

3.3 AUX A MASTER MODULE (CUE)
Aux A Mix Control 9
Aux 3 and Aux 4 Push Switchs 9
Echo RCV Rotary Control Master 9
Aux A Master Fader 10
Aux A Module Back Panel 10
Aux 3 output jacks 10
Aux A output jacks 10
Line out 1 ~ 4 (buss master outputs) 10

3.4 AUX B MASTER MODULE (ECHO)
Aux B Mix Control 10
Aux 3 and Aux 4 Push Switch 10
Aux B Master Fader 10
Aux B Module Back Panel 10
Aux 4 output jacks 10
Aux B output jacks 11
Line out 5 ~ 8 (buss master outputs) 11
Loading Advice 11

3.5 CONTROL ROOM MONITOR MODULE
Monitor A Output Jacks 11
CR MON, L and R Output Jacks 11
Push Switches 11
Control Room Master 11
Solo Master 11
Solo L.E.D. 11
Auxiliary Line In Jacks 11

3.6 STUDIO MONITOR MODULE
Studio 11
Studio MON L-R Outputs 11
Monitor B L-R Outputs 11

3.7 TALKBACK MODULE
Oscillator Frequency Select Switch 11
Oscillator Function Select Switch 11
Talkback Microphone 11
Studio 12
Aux A 12
Slate 12
Headphone Select Switch 12

3.8 POWER SUPPLY UNIT
Meter Bridge Connector 12

4. STANDARD PATCHES 12
Recommended 8 Track Setup 13
16 Track Remix Patch
with an Unorthodox Stereo Echo 13
Recommended 16 Track Setup 13

5. LEVEL SETTING AND OPERATION CHECK
Line in → Access send 14
Line in → Direct out 14
Line in → Line out/Aux out 14
Check and adjustment of the input module
overload LED 15
Aux 1 → Aux A send 16
Aux 2 → Aux B send 17
Line in → Line → Aux 3 → Aux A send .. 17
Aux 3 → Aux B send 18
Line in → Line out → Aux 4 → Aux B send . 18
Aux 4 → Aux A send 18
Line out → Mon A left/right 18
Solo circuit 19
Control room monitor circuit 19
Studio monitor circuit 19
Echo RCV circuit 20
Meter calibration and LED circuit 20
Test tone oscillator 20
Talkback circuit 21
Tape in circuit 21
Mic input (Model 301 Input Module) 22
Phantom power supply 22

INTRODUCTION TO THE MODEL 15

The Model 15 is an audio mixing console designed to satisfy the requirements of modern multichannel recording. Many of the auxiliary mixing systems needed are built in and can be re-routed to do more than one job. Fast, convenient and complete operation with 8 track or 16 track recorders can usually be accomplished without re-patching. However, the process of multichannel recording is constantly changing, growing more complex as an art with each advance in technology. Your signal processing needs may require a unique arrangement of subsystems. No console has ever been built so large and complete in its routing that it could solve every imaginable problem with one button. Someone will always be able to come up with that unusual situation requiring "just one more mix". In order to cope with these unpredictable requirements, patch points are provided throughout all signal pathways on the M-15.

As our mixing console becomes more flexible, the amount of time needed to understand the available function increases as well. The main signal path from mic in to line out is still fairly straight forward. The requirements have not changed much since the days of "mono" but the routing for echo sends, multiple source cue feeds, and stereo monitoring can be hard to visualize. The beginner often overlooks the significance of connections that would be immediately obvious to the experienced recording engineer. If you expect to find that "extra mix" quickly, you must be prepared to study the layout of the M-15 thoroughly. In most instances the physical arrangement of the controls on the top panel has very little to do with the sequence of electronic parts inside. The actual wiring order is the information you need to understand to use the M-15 successfully. As an example, if the controls on an input module actually followed the order in which they are wired, the module top panel would look like this. We'll put the jacks on the top, as well as the switches and faders.

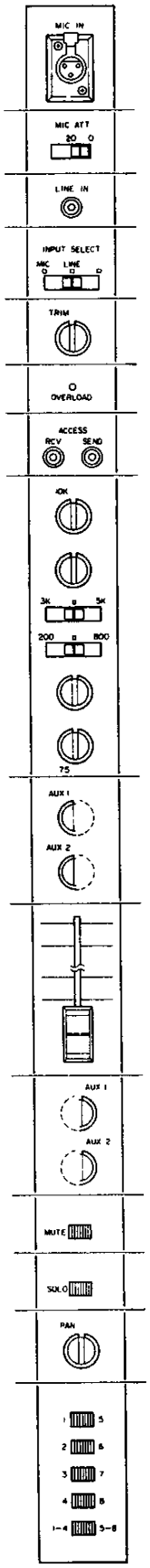

While this arrangement of controls might help the beginner to understand the flow of signal in the module, it would be very inconvenient to operate. Still, the wiring sequence must be understood before the more complex functions of the M-15 can be used successfully, so along with the documentation you will need for service (schematic diagrams, mother board layouts and mechanical disassembly information) we include a simplified electrical sequence chart called a BLOCK DIAGRAM. This drawing shows all the controls, switches, amplifying stages and connectors in their proper order. Learning to read it will provide the answers to any questions about what comes where on the inside. Even though the block diagram can indicate what is available in the way of extra circuit flexibility, it can't explain why a connection or switch has been included, or suggest a standard layout. In the following sections of this manual we will do our best to describe the individual functions and controls of the M-15 and how they can be arranged in more than one sequence, but your mixing needs may be best served by an arrangement of inputs and sub-system connections you work out for yourself.

Good luck with your sound.

2. IMPEDANCE MATCHING – OR; WHAT PLUGS INTO WHAT

All electronic parts including cables and non powered devices (mics, passive mixers and such) have impedance, measurable in ohms (symbol Ω or Z). Impedance is the total opposition a part presents to the flow of signal, and it's important to understand some things about this value when you are making connections in your mixing system. The outputs of circuits have an impedance rating and so do inputs. What's good? What values are best? It depends on the direction of signal flow, and in theory, it looks like this:

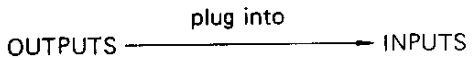

OUTPUTS

It is generally said that the output impedance (Z) should be as low as possible. 100 ohms, 10 ohms, the lower, the better in theory. A circuit with a low output impedance will offer a low resistance to the passage of signal, and thus will be able to supply many multiple connections without a loss in performance or a voltage drop in any part of the total signal pathway. Low impedance values can be achieved economically by using transistors and integrated circuits but other considerations are still a problem in practice.

1. The practical power supply is not infinitely large. At some point even if the circuit is capable of supplying more energy, you will run out of "juice".
2. Long before this happens, you may burn out other parts of the circuit. The output impedance may be close to the theoretically ideal "0 ohms" but many parts in the practical circuit are not. Passing energy through a resistance generates heat, and too much current will literally burn parts right off the circuit card if steps are not taken to prevent catastrophic failure.
3. Even if the circuit does not destroy itself, too high a demand may seriously affect the quality of the audio. Distortion will rise, frequency response will suffer, and you will get poor results.

INPUTS

Inputs should have very high impedance numbers, as high as possible, 100,000 ohms, 1 million ohms, more, if it can be arranged. A high resistance to the flow of signal at first sounds bad, but you are not going to build the gear. If the designer tells you his input will work properly and has no need for a large amount of signal, you can assume that he means what he says. For you, a high input impedance is an unalloyed virtue. It means that the circuit will do its job with a minimum of electrical energy as a beginning. The most "economical" electronic devices in use today have input impedances of many millions of ohms. Test gear. For example, voltmeters of good quality must not draw signal away from what they are measuring or they will disturb the proper operation of the circuit. A design engineer needs to see what is going on in his design without destroying it, so he must have an "efficient" device to measure with.

The classic measurement for Output impedance is to load a circuit until the voltage drops 6 dB (to half the original power) and note what the load value is. In theory, you now have a load impedance that is the same as the output impedance. If you reduce the load gradually, the dB reading will return slowly to its original value. How much drop is acceptable? What load will be left when an acceptable drop is read on the meter?

When the load value is approximately seven times the output impedance, the needle is still a little more than 1 dB lower than the original reading.

Most technicians says "1 dB, not bad, that's acceptable." We at TEAC must say we do not agree. We think that a seven to one ratio of input (7) to output (1) is not a high enough ratio and here's why.

1. The measurement is usually made at a midrange frequency and does not show true loss at the frequency extremes. What about drop at 20 Hz?
2. All outputs are not measured at the same time. Most people don't have twenty meters, we do. Remember, everybody plays together when you record and the circuit demands in practice are simultaneous. All draw power at the same time.

Because of the widely misunderstood rule of thumb, the seven to one ratio, we will give you the values for outputs in a complete form.

Even though the true output impedance is:

Line Out/Aux Out	100 ohms
CR Mon Out	100 ohms
Studio Mon Out	100 ohms
Aux A and Aux B Out	100 ohms
Mon A and Mon B Out	100 ohms
Aux 3 and Aux 4 Out	100 ohms
Tape Foldback	
	Equal to tape recorder output impedance connected to TAPE IN.
Direct Out	100 ohms
Access Send	100 ohms
Talkback Out	Less than 1 ohms
Headphone Out	Less than 1 ohms

For the practical reasons explained previously, we feel that 7 : 1 ratio is not sufficient. To use this rule of thumb, you must use this higher value. We'll call this value the "output load impedance."

Line Out/Aux Out	1.4 k ohms
CR Mon Out	1.4 k ohms
Studio Mon Out	1.4 k ohms
Aux A and Aux B Out	1.4 k ohms
Mon A and Mon B Out	1.4 k ohms
Aux 3 and Aux 4 Out	1.4 k ohms
Tape Foldback	
	Equal to tape recorder output impedance connected to TAPE IN.
Direct Out	1.4 k ohms
Access Send	1.4 k ohms

This is a number that will give good results with the 7 : 1 method. To go one step further, here are the actual minimum ohmic values we feel are wise.

Connect no total input impedance load higher than:

Line Out/Aux Out	10 k ohms
CR Mon Out	10 k ohms
Studio Mon Out	10 k ohms
Aux A and Aux B Out	10 k ohms
Mon A and Mon B Out	10 k ohms
Aux 3 and Aux 4 Out	10 k ohms
Tape Foldback	
	Equal to tape recorder output impedance connected to TAPE IN.
Direct Out	10 k ohms
Access Send	10 k ohms

Input impedance is more straight forward and requires only one number. Load is load, and here are the values for the Model 15:

Mic Input	20 k ohms
Line Input	50 k ohms
Echo Receive	20 k ohms
Tape Input	40 k ohms
Buss Input	20 k ohms
Access Receive,	
Input module	50 k ohms
Buss Master module	10 k ohms
Line 1, 2, 3 Mon	100 kohms

If one output is to be "Y" connected to two inputs, the total impedance of the two inputs must not exceed the load impedance, as mentioned before, and if it becomes necessary to increase the number of inputs with slight exceeding of the load spec., you must check for drop in level, loss of headroom, low frequency response, or else suffer a loss in quality. If one input is 10,000 ohms, another of the same 10,000 ohms will give you a total input impedance (load) of 5,000 ohms. To avoid calculations you can do this when you have two identical inputs to connect to one output.

Take the lower value of the two input impedances and divide it in half. If the number you have is still 7 times the output impedance, you can connect both at the same time.

When you have more than two loads (inputs), just dividing the lowest impedance by the number of inputs will not be accurate unless they are all the same size but if you still get a safe load (higher than 7 : 1 ratio) by this method, you can connect without worry.

MATHEMATICAL FORMULAS

If you must have exact values, here are the formulae:

For more than 2 — $Rx = \frac{1}{\frac{1}{R1} + \frac{1}{R2} + \frac{1}{R3} \sim \frac{1}{Rn}}$

Rx = value of total load

For 2 loads or inputs — $Rx = \frac{R1 \times R2}{R1 + R2}$

Finding Impedance Values on Other Brands of Equipment.

When you are reading an output impedance specification, you will occasionally see this kind of statement:

Minimum load impedance = X ohms
or
Maximum load impedance = X ohms

These two statements are trying to say the same thing, and can be very confusing. The minimum load impedance says, please don't make the number of ohms you connect to this output any lower than X ohms. That's the lowest number. The second statement changes the logic, but says the exact same thing.

Maximum load impedance refers to the idea of the load instead of the number, and says, please, don't make the load any heavier. How do you increase the load?

Make the number lower for ohms. Maximum load = minimum ohms, so read carefully.

When the minimum/maximum statement is made you can safely assume that the manufacturer has already done the "seven times is best" ratio calculation. And the number given in ohms does not have to be multiplied. You can match the ohmic value of your input to this number of ohms successfully, but as always, higher ohms will be okay (Less load).

QUICK TEST FOR SAFE LOADS WITHOUT USING TEST GEAR

If you don't know the exact value input impedance for a device you want to connect there are still a couple of ways to test it.

1. Listen to the main signal output (line out or Aux out) as you remove and re-connect the device to the direct out. If you hear a drop in level or a change in the tonal balance of the sound on the main line out, the device is likely to be drawing too much current and is unsuitable.
2. If you can get a steady tone to work with, you can read your VU meter and make this measurement. Patch the steady tone through the mixer from input to line out. Set the faders so the tone reads "0" VU on the meter. Now connect the device you wish to check to the "direct out" on the input module you are using for the steady tone. If the drop in level on the meter is more than 0.5 dB, the device has too low a value of input impedance. It will not damage the mixer to use it, but it will affect the quality of the signal on the main line.

If making the connection to the direct out causes the main line signal to drop 6 dB, the input impedance of the device is the same as the true output impedance.

You should also know that to make the "disconnect, re-connect the load" test in section 1 above, you must actually pull out the connection. Many devices will affect a circuit when the signal cable is connected, even if they are not plugged in the power line, or their power (AC) switch is in the off position.

3. THE MODEL 15 FROM MIC IN TO LINE OUTS

In our description of the seven different types of module used in the M-15, we'll disregard the physical layout and follow the block diagram, or actual wiring sequence.

3.1 INPUT MODULE

All sixteen input modules are identical and can be interchanged without modification. An additional 8 modules can be added to the frame at any time. The extra positions are completely wired, with one exception. The RMX (remix) position will be inoperative on the last 8 positions (17-24) because there is no provision on the tape A or B circuit for the extra 8 busses necessary. All other features will be identical in the 24 input mode.

MIC IN XLR CONNECTOR

This connector and the small amount of wiring immediately in front of the input transformer are the only parts of the M-15 that use the 3 wire balanced type of circuit. The Mic in XLR, the pad of 20 dB that is switch selectable and the transformer primary are "balanced". All circuits thereafter are 2 wire "single ended", one hot lead, one ground.

MIC ATT SWITCH

When this switch is set to the left, a balanced pad lowers the "Mic In" level by 20 dB. Since the maximum permissible input to the transformer is 0 dB (1 volt), when high output mic's are used on very loud sounds, extra external pads may be required to lower the input signal to safe levels. The input load impedance of the "Mic In" group of parts is 20 kohms. This circuit correctly matches 50-250 ohm low impedance microphones.

LINE IN JACK

An RCA jack on the rear of each input module. The maximum signal you can apply here is +28 dB (25 volt). The Mic Att switch does not affect this input. The input impedance is 50 kohms.

INPUT SELECT SWITCH

This switch has 3 positions, left selects the Mic in XLR, center selects the Line In RCA jack on the back of the module, and right, marked "■" (remix), selects as an input one of the "Tape In" jacks on the buss master modules. Since each input module will receive only one "Tape In" signal, we'll provide a chart to show which signal goes to which module.

The "Tape In" A and B systems normally feed the monitor sections on the buss master modules. The "■" (remix) position on the input module will allow you to route tape playback signal to the input module for final mixing without moving the cables plugged in at tape A or B to the input "Line In" jacks. In addition, selecting this "■" (remix) position on the input module will not disable the normal operation of the monitor.

TAPE A JACK, UPPER ROW

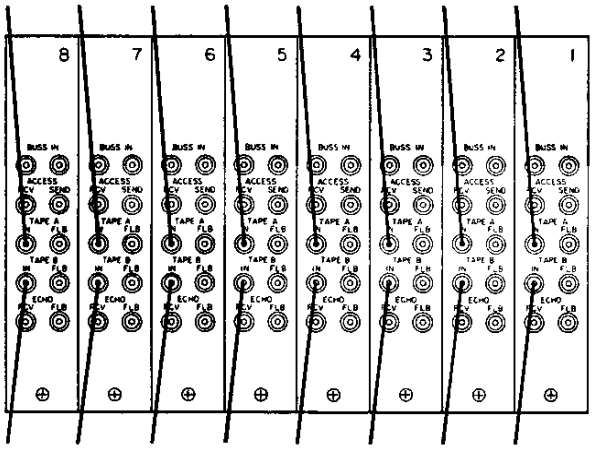

TAPE B JACK, LOWER ROW

Signal will go to both circuits at the same time, allowing separate use of the monitor A and B outputs as extra mixes. True stereo echo is an obvious first choice, and the mixdown machine can be monitored using a "Line In" position on the control room monitor module. Since the remix position can be selected one module at a time, a single track may be equalized and monitored without disturbing "Mic In" settings on the whole mix. A decision can be made quickly on the artistic success or failure of an individual part without the need to place the entire console in remix mode just to see the effect of corrective equalization on a single track.

If you examine the input module numbers you will see that the Number One module is the one closest to the "Buss Master 1 Module." The mixing console is numbered from right to left on the input module section, but from left to right in the buss master section. This system has been adopted in order to keep the mixing console as compact as possible in 16 input configuration. Expanding to 24 inputs will now add modules to the left of the ones already installed, and the numbering will remain correct, even though inverted.

Since the TAPE IN jack on the buss master module actually feeds 3 separate mixing positions it will present a more severe load to anything connected to it than "Line in" on the module. TAPE IN's have an input load impedance of 40 kohms, LINE IN's (on the input module) have an input impedance of 50 kohms.

TRIM

This control will alter the gain of the first amplifier in the console. It will affect the level of any signal, Mic, Line, or ■. With this pot rotated fully clockwise (rightward), the maximum gain of the first amplifier is 48 dB. In this position, the maximum input signal before overload is -38 dB (0.013V). To improve the performance of this first gain critical stage, for the M-15, TEAC has elected to build a discrete amplifier with FET inputs instead of using the standard I.C.'s now available. Substantial improvements in performance have been realized as a result. When the pot is in its minimum setting (fully counterclockwise or leftwards) the gain is reduced to 8 dB and the maximum signal that can be handled without overload will be +2 dB (1.3 V).

Remember, these overload figures refer to the input of the amplifier, not the input plug or connector. Losses occur, and pads can be inserted before this point. The maximum signal that can be applied to the line in jack is +28 dB (25V) with the Trim rotated fully leftwards, and -12 dB (0.25 mV) with the Trim rotated fully rightwards.

OVERLOAD L.E.D.

When signals high enough to make the ACCESS SEND jack output exceed +15 dB are applied to the INPUT module, this L.E.D. will light up. Trim, or the Mic Att pad should be adjusted until the L.E.D. remains out when signal is present. When recording extremely percussive transient material, it may require full negative trim and pad to prevent this L.E.D. from flickering on strong peaks. Changing to a less sensitive mic may help.

On the Aux B Master Module you will find a rotary switch marked NORM/MIX. This control will alter the sensitivity of the overload signal L.E.D.'s on the input modules so that they can be used as a signal indicating system or tracer. When this switch is set to "MIX" the sensitivity of the L.E.D. driver is increased by 20 dB. The L.E.D. will now show you which modules have signal applied to their inputs. To again check for input overload, you must switch this control back to "NORM." It affects all input L.E.D.'s simultaneously.

ACCESSORY SEND – RECEIVE JACKS

The high gain provided by the use of discrete circuitry in our new mic preamplifier allows us to place a "patch-point" in this more useful position. The level at the send jack is -10 dB (0.3V) and the output load impedance is 1.4 k ohms. A limiter connected to this point in the M-15 circuit can now be set to a range of compression that will not alter when either the equalizer (the next stage) is adjusted or the input fader is moved (the stage after the EQ amps). This pair of jacks is not "normalled" so, when no device is bridged from send to receive, jumpers must be in place for signal to flow to the EQ amps and on through the console. However, since all the mixing controls lie after the "Receive" jack, it is possible to use "Accessory Receive" as an input, and by-pass the the first gain stage. The only functions that will be lost are the trim and overload indicators. The signal quality will improve slightly but it will not be possible to switch to "Mic In", "Line In" or "■" without re-patching. This unorthodox patch is suggested for final remix when all recording has been completed, and more time for patching is available. Maximum level in will be +18 dB, (8 volt). Input impedance is 50 k ohms.

EQUALIZATION CONTROLS

The M-15 has 6 frequency, 4 control E.Q. divided into two sections of two knobs each. On the upper section, 10k Hz fixed, 3k Hz or 5k Hz switch selectable. On the lower section, 200 Hz or 800 Hz, switch selectable, and 75 Hz, fixed. The fixed frequency controls will not work unless their frequency select switch is away from the center, or "EQ OFF" position. Either side will do but center is "OFF" for both knobs in a section. The chart below shows the range for each frequency, boost and cut.

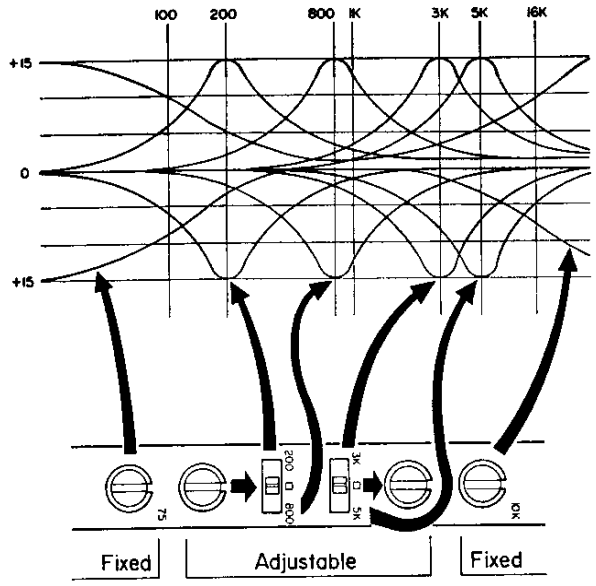

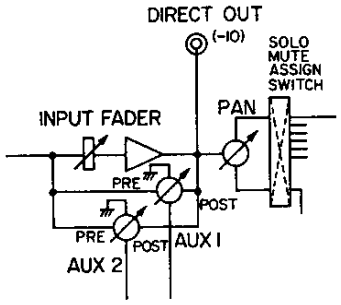

AUX 1 AND AUX 2 PRE-/POST-FADER FUNCTION

Both of these Auxiliary Mixing Positions can be fed from more than one point in the signal path. To make their operation clear we'll use a section of the Block Diagram to show the connections. Since there is no switch, the direction of rotation of the control will determine which point signal will be derived from. Counterclockwise (leftwards) rotation of either the Aux 1 or Aux 2 control will draw signal before the input fader. If you choose this source, moving the input fader will not affect the level of your Aux Mix. This is useful for making up cue mixes for musicians. Nothing is more frustrating to a player than having the drums suddenly disappear from the earphone mix during rehearsal. Clockwise (rightwards) rotation of either the Aux 1 or Aux 2 control will draw signal after the input fader. This source is useful for echo mixes. As the input fader is closed, the echo send will also be reduced, "fading out" will not leave you with a "ghost" coming from your echo return.

Each control has a detent you can feel at "center" allowing you to be sure it is completely "OFF" and drawing no signal from either side.

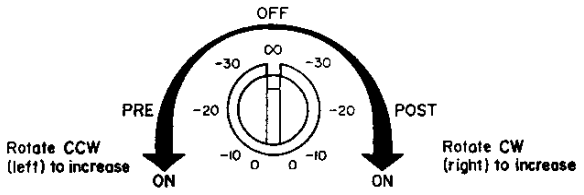

This type of control is called a "W" pot. Its use in the M-15 allows us to eliminate a switch that would otherwise be necessary to select "pre" or "post". Both circuits may be set to the same side safely, either pre or post. You may have 2 postfader echo sends or 2 prefader cue systems or one of each as the needs of the moment require. Because of slight differences in function on the master control of each circuit, we suggest that you use Aux 1 as your input cue, and Aux 2 as an echo circuit, but this is basically a recommendation not a command. The reasons will become more clear when we describe the final controls for each function. (See "Aux A Module", "Aux B Module" Pages 9 and 10).

INPUT FADER

Controls the signal level of all prior stages. Faders, also called pots or attenuators always cause loss in order to control signal level. Gain stages in an electronic device always run "wide open" at whatever gain they are set for, unless they have provision for "Trim" or actual gain adjustment. In the M-15 only two of the many amplifiers employed actually have "Trim", the first gain stage or Mic Pre and the Buss Summing amplifier. When you advance any straight line fader on the M-15 you are just reducing the loss it causes. The entire signal flows to the next stage only if the fader is "wide open" or up all the way.

DIRECT OUT JACK

There is no special control for this output on the top panel. It is "Hot" all the time, and provides an unmixed single signal output of whatever has been assigned to the module. This direct ouput can be used for a variety of purposes.

1. A subsidiary mix can be made by using an accessory mixer fed by this output.
2. One mic, one track recording happens frequently, and using direct out will by pass unneeded summing networks and amplifiers. Going "Direct" to the recorder will result in a cleaner signal.

On the M-15 monitoring will be possible by switching the appropriate monitor section to "Tape" and listening to the recorders electronics instead of a buss master. For metering, either the recorder or an accessory meter bridge can be used. (MB-20)

Since the amplifier that feeds this jack also feeds the buss assign network and the post fader cue systems, it is wise to calculate the total load carefully. The output load impedance of this jack is 1.4k ohms. The load of the pre-wired circuits restrict the connection of this output to a single circuit at a time, unless the equipment you plan on connecting here is known to have very high values for input impedance (100 kohms or more).

SOLO

Depressing this pushbutton bypasses whatever source you have selected on the control room monitor module and substitutes the signal appearing at this point in the input module. More than one module at a time may be selected producing a "Mix" on this buss. Since this "Mix" goes only to the monitor module, all other line output functions remain uninterrupted and recording will not be affected. The Solo buttons latch, push again to release. Whenever any button is down, an L.E.D. lights on the control room module to remind you that the normal selection function of monitor has been bypassed. The Solo signal is monophonic, but is distributed equally between both monitor outputs. You will be able to set your EQ, but echo return and stereo placement will be disabled.

PAN POT AND BUSS ASSIGNMENT

Each input module may only feed signal to four of the 8 buss master modules at a time. A fifth push switch in the assignment section marked Buss In 1 ~ 4 on one side and 5 ~ 8 on the other will transfer the four outputs of the switch section from one group (Up - 1 ~ 4) to the other (Down - 5 ~ 8).

Depressing more than one button will engage the "Pan" control. This single knob works two faders that are wired "back to back". As you rotate the knob, one fader is turned up as the other is turned down. When the control is "dead center" each fader is still reducing the signal slightly so that the signal transition through "center" does not become louder as you "Pan" through it. When both speakers in a stereo pair are producing sound, you don't need as much power to maintain a constant volume. If only one button is depressed, the pan control has no effect on the signal. When any two buttons are depressed, the lower number is "Panned" to full on when the control is turned as far as it will go counterclockwise, the higher is "Panned" to full on clockwise.

The "Pan" logic for 3 or 4 button arrays is easiest to explain with some drawings. If shaded buttons are assumed to be down, the logic is:

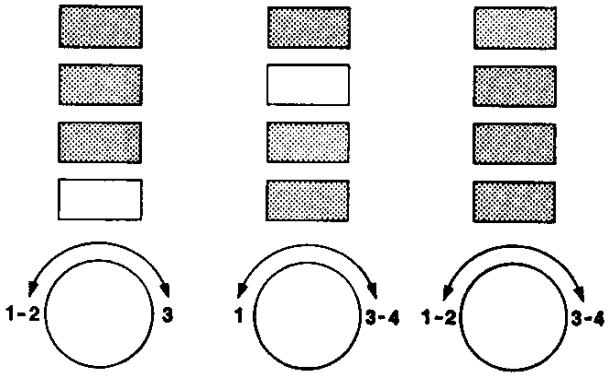

Typical examples of multichannel panning

Since the entire pan logic diagram also transfers to buss group 5 ~ 8, panning signal to busses in separate groups will not be possible. As an example to "Pan" between Buss 1, and Buss 6, or between Busses 4 & 5.

MUTE

The mute switch is a program interrupt, and will affect your recording. When depressed, it disconnects the output of the module from the Buss assign section and the Direct Out Jack. However, the Aux 1 and 2 circuits are not affected. Cue or echo functions will not be interrupted. If it is necessary to mute echo as well while remixing, the "input select" switch will disconnect signal at the beginning of the chain as long as you have a position available that has no signal appearing on its back panel connector.

3.2 BUSS MASTER MODULE

BUSS IN JACKS

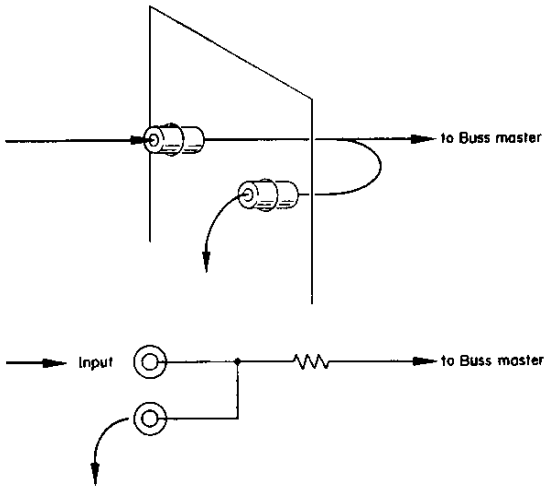

These two R.C.A. Jacks allow you to add a signal or group of signals to the input of the Buss Master Module and route them on to another circuit, if necessary. Because this connection acts in the same fashion as an external "Y" cable, care must be taken in calculating the true load. The output feeding the "Y" will be affected by the total load of both connections. The Buss In input load impedance is 10 k ohms. Find the input load impedance for the second connection and see Page 3, impedance matching, for the appropriate formulas.

BUSS TRIM

Like the trim on the first gain stage of the 1st input module. When the overall level on the buss becomes too high, distortion can be induced in the summing amplifier. Reducing the setting of the Straight Line Master will not help. Turning this "Trim" control counterclockwise will lower the gain and increase the headroom of the summing amplifier. In extreme cases, it may be necessary to reduce the level of each input fader. The maximum gain reduction provided by the "Trim" control is approximately 20 dB. The normal position is fully clockwise.

ACC SEND/RECEIVE JACKS

Provided for signal processing of the entire Buss Output. The Jack pair is not connected internally and a jumper or a device must be completely connected for signal to flow to the next stage. The output load impedance of the Send Jack is 1.4 k ohms. The input load impedance of the Receive Jack is 10k ohms.

This signal path (in and out) is located behind the Buss Master Fader. The action of a limiter or compressor action will not be affected by moving the Buss Master Fader, but will be affected by "Trim." At this point in the circuit we have a complete Buss Master Mix. All functions of the input module will affect the signal here, all major and minor patch points are behind us, and as far as the recorder is concerned, the signal is ready to record – we are done. The only problem job remaining is: how do we hear what we are doing? This signal must go to our monitor circuits. So, we put an internal connection here to one side of a switch:

MONITOR A SELECT and,
also to MONITOR B SELECT

BUSS MASTER FADER

This fader controls the overall level of signals from the input modules and the echo receive section. When Buss is selected, echo receive signal enters the signal path here. Other functions of the echo assign buttons enter the monitor at later points in the circuit. See Page 9, Buss Master Module.

TAPE AS SOURCE

There are two switches that seem to do the same job, feeding signals to the monitor system. This apparent doubling of function is provided for several reasons. Even though the M-15 has only 8 Buss Master Modules, it has a 16 track monitor system. Setting the monitor select switch to the left selects "Buss Master Output" as a signal. Re-setting to the right most position will now select "Tape" as a monitor, and we need sixteen positions to monitor the playback of all sixteen tracks. Because of this 16 track monitor requirement, all monitor controls are doubled and there are two apparently identical sets of controls. When used as "Buss Master" monitor they become redundant, but the two sections are not identical in "Tape" mode. Monitor section "A" is connected only to Tape in A, and monitor section "B" only to Tape in B.

BUSS AS SOURCE

If our basic 16 track setup on Page 13 is used, you will get a different track on each section of the monitor or Buss Master Module (one for each). Monitor "A" tape select will be track 1, Monitor B tape select will be track 9. Both Monitor A and B will see Buss Master 1 when Buss Out is selected by their Monitor Select Switches. However, this switch does not control the logic of signal selection for the Aux 3 or 4 circuits immediately above, it only works on the straight line fader marked "Mon Gain" below it. We have provided each section of our monitor with an output RCA Jack on the back that can be regarded as an 8 x 2 stereo mix in itself. When using the M-15 with an 8 track recorder, a great deal of flexibility in monitoring becomes possible for a standard 8 track setup. See Page 13.

MONITOR PAN

The Monitor Pan affects only the monitor mix. It will not alter the level or pan position on the Buss Master Output when input panning is done between two busses, but if both selected busses are monitor panned to the same side in your stereo monitor mix, turning the input pan control will produce no audible result. Input panning will, in fact, affect what you record, but you won't have

any indication of what you are doing unless the "Monitor Pans" on the two busses are set one to each side. This fact can give you a lot of trouble. Work through this part of the block diagram carefully, it is very complex, and can take some time to understand thoroughly. *

AUX 3 AND AUX 4

These two potentially independent 8 x 1 mixing systems are subject to somewhat the same logic as the monitor A and B circuits, but they are substantially different in their mode of operation and signal selection. The rotation of the Pot itself will determine the source of signal. Leftwards (counterclockwise) rotation will select Buss Signal and Level is controlled by further leftwards rotation. Rightwards rotation will select Tape signal "A" on the Aux 3 group of controls and Tape signal "B" on the Aux 4 group. Further rightwards rotation will raise the level of signal. Once again, you have 8 Buss Outs, but 16 Tape Playbacks. The primary use of these two circuits is "Earphone Cueing" of tape playback to musicians making overdubs. For Aux 3 and Aux 4, a separate Mono Output without a master is provided on the Aux A (Aux 3) and Aux B (Aux 4) Master Modules.

ECHO RECEIVE SECTION

With 4 buttons and one rotary fader, this subsystem is essentially an independent input to whatever circuit is selected by the switches. Each button routes the signal to a separate point in the chain. All push switches may be depressed simultaneously, or used singly. The "**Buss**" switch adds the signal to the Buss Master before the Fader and Accessory Receive Jacks. The **Mon A** and **Mon B** buttons route the signal to their appropriate stereo monitor sections prior to "Mon Gain" and the "Mon Pan" pot. Echo, or other line level signal will then be affected by these monitor controls, but will not be recorded. The **Aux 1** button routes the signal to a mixing network that has its rotary master fader marked Echo Rcv, Aux A on the Aux A Module. Echo or 8 other line level signals can now be added to the Aux A Master permitting an Echo return to Cue if the Aux A buss is used for an earphone feed.

To get the signal in to the Echo RCV group, use the Echo RCV jacks on the Buss Master Modules. Each jack is provided with a foldback (or Y connection) so that a single echo device may be used to feed several modules at once. However, you should be aware that you have "double loaded" the device you have connected, and load impedance calculations may prove necessary. *The input impedance of a single "Echo RCV" is, without foldback, 20 k ohms. The end of the foldback route will affect the total value for input load impedance, see section 2. for the proper formulas. The output of one device may not be capable of supplying enough current to feed all 8 "Echo RCV" inputs simultaneously.

*There are no amplifiers used to "buffer" or protect your source of signal connection on any of the foldback connections provided on the M-15.

3.3 AUX A MASTER MODULE (CUE)

This system is intended to be used as an earphone cue. It provides a master fader and summing point for the Aux 1 on the Input Modules and Aux 3 & 4 on the Buss Master Modules. Mic signals and tape playback can be combined to produce a mono mix. All 8 echo receive signal positions may be added to this buss as well allowing either an "Echo to Cue" function or additional Summing. The key to this sytem is the Aux Mix Control.

"AUX A MIX" CONTROL

Similar to a panpot, this rotary control blends two sources into one signal. Leftwards rotation gradually increases the proportion of the Aux 1 signal, rightwards rotation increases the amount derived from the push switch marked "Aux 3" and "Aux 4". When the Aux Mix Control is in the center, both systems feed signal to the Aux A master equally. If you consider Aux 1 to be MIC signals and the switch selected Aux 3 and Aux 4 systems to be used for tape playback, adjusting the balance between a singer (new mic cue) and the playback of a partially completed recording (tape playback) can now be accomplished by turning one balance control. More vocal in the Cue, turn the Aux Mix to the left. More signal from Tape, rotate to the right. On the Block Diagram it looks like this.

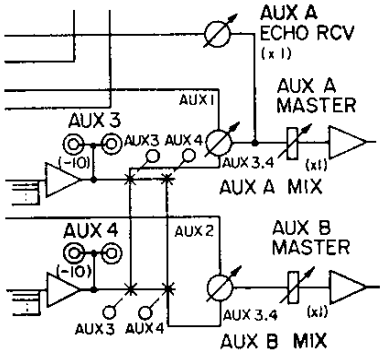

AUX 3 AND AUX 4 PUSH SWITCHES

Both of these may be down (selected) at the same time. If neither one is engaged, no signal will be sent to the right side of the Aux Mix Blend Control.

ECHO RCV

This control is the master for all 8 **Echo Receives** marked "Aux A" on the Buss Master Echo Receive section. One or more of the Echo Aux A selects must be engaged and signal brought up by the Echo Receive Pots on the Buss Masters for signal to flow to the "Echo RCV" for final level adjustment to the Aux A buss.

AUX A MASTER FADER

Final level control of all Aux A signals.

AUX A MODULE BACK PANEL

The simplest method of describing these connections is to consider them in their physical sequence, from top to bottom.

AUX 3 OUT

A separate output without a master for the Aux 3 8 x 1 group. The output load impedance is 10 kohms. The reference level is -10 dB, 0.3 volt.

AUX A OUT

Final output of the Aux A. Buss output load impedance 10 kohms. Reference level -10 dB, 0.3 volt.

LINE OUT, 1-4

Final outputs for Buss Masters 1 through 4. Output load impedance 10 kohms. Reference level on these jacks can be internally altered by a switch inside each module. LOW = -10 dB, 0.3 volt

HI = -2.2 dB, 0.775 volt

When the M-15 is assembled, the switch is set at the Lo position.

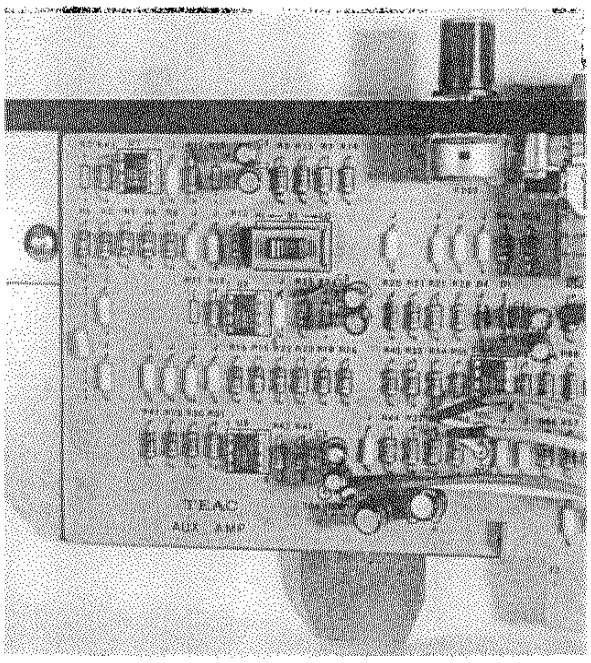

3.4 AUX B MASTER MODULE (ECHO)

The primary use of this subsystem is as an echo send. It is identical to the Aux A module in all respects except one. It has no echo receive capability. The knob located in the "Echo RCV" position is a switch controlling the input module overload indicator sensitivity, as described on Page 9. In the "Norm" position the input overload sensitivity is +15 dB. In the "MIX" position the L.E.D.'s will flash when the signal reaches the lower level of -5 dB, providing visual indication of the presence of signal on the input module, even if the fader is all the way down.

AUX B MIX CONTROL

Same as Aux A Mix Control, but rightwards rotation selects Aux 2 pots instead of Aux 1. Leftwards rotation selects Aux 3 and Aux 4 push switches as signal sources. Again, as in Aux A, either Mic or Playback can be favored as a signal quickly. When no echo is needed, this system can be used as a second earphone mix for musicians.

AUX 3 AND 4 PUSH SWITCHES

Both may be depressed at once. If neither switch is down, rightwards rotation of the Aux Mix Pot will mute the system. If number Aux 2 pot on the input side is open (passing signal), leftwards rotation of the Aux Mix Pot will mute the system. Always check your sources of signal.

AUX B MASTER

This fader controls the final level at the Aux B Output Jacks.

CAUTION

Since the Aux 3 and 4 circuits may also select "Buss Out" as a signal source, a circular assignment (feedback) is possible on this system if the Echo Receive Section is set to pass Echo Return to the Master Buss Outputs. Before you begin, it is wise to make sure that you have not inadvertently formed such a loop. Careful thought and study of the Block Diagram will show several possible causes of trouble. One switch position may be useful, but another impossible with any really complex patch. The many exterior connections on the M-15 back to the Aux Systems are useful and necessary, but not completely fail safe as regards looping. If flexibility is desired, the risks are unavoidable. Take care!.

AUX B MODULE BACK PANEL

Outputs from top to bottom, as in Aux A.

AUX 4 OUT

A separate output without a master for the Aux 4, 8 x 1 group. The output load impedance is 10 kohms. Reference level is -10 dB, 0.3 volt.

AUX B OUT

Final output of the Aux B buss, output load impedance is 10 kohms. Reference level is -10 dB, 0.3 volt.

LINE OUT 5-8

Final outputs for Buss Masters 5-8. Load information and impedances are identical to Line Outs 1 & 4.

LOADING ADVICE

Since the double output jacks are connected to the same gain stage, any device connected to one pin will affect the output capability of the other pin. To determine the true value of loading on the mixers final stage, the input impedance values of both devices must be considered even when only one of them is being used. For this reason we suggest that you unplug anything connected to the final stage that you are not using when you make your most critical mixes. The output load impedance of this stage is 10 kohms.

It's always a good idea to use as small an amount of electronic stages as you can. If you don't need a circuit for its control or function, bypass it and your sound will improve.

3.5 CONTROL ROOM MONITOR MODULE

MON A OUTPUTS

These RCA Jacks provide a stereo output without a master fader for the upper monitor section on the Buss Master Modules. The output level is -10 dB, 0.3 volt. The output load impedance is 10 kohms.

"CR" MON, L AND R OUTPUTS

This pair of outputs should normally be connected to the control room power amplifier, although other uses are possible as well. The output load impedance is 10 kohms. The output level is -10 dB, 0.3 volt.

PUSH SWITCHES

There are seven push-to-latch, push again to release switches on this module. Directly or indirectly, they allow you to monitor all of the mixing positions of the M-15. This circuit is a mixer in itself provided with an active summing circuit. All of the push switches can be engaged simultaneously or in any combination. The circuits are stereo for Monitor B, Monitor A and the 3 Auxiliary Line In Pairs and Center Feed Mono for the Aux A and Aux B positions.

CONTROL ROOM MASTER

This rotary control provides a master volume for the "CR Mon" Stereo Output.

SOLO MASTER

This rotary control sets the volume of the Solo circuit.

SOLO L.E.D.

When one or more Solo push switches are depressed on the Input Modules this L.E.D. will light. No monitor signal will be heard other than "Solo" until all Solo switches are in the up position.

AUXILIARY LINE IN JACKS

3 stereo pairs are provided to allow the monitoring of 2 track recorders or other subsidiary mixers without the necessity of disrupting assisgnments or patches elsewhere on the M-15. These Jacks also feed the push switches on the adjoining Studio Monitor Module. It has no inputs on its back panel, only outputs.

3.6 STUDIO MONITOR MODULE

Basically identical to the Control Room Module in its function, this module is provided primarily as a separate master control for a set of loudspeakers in the studio proper. It can also be used as separate mixer. Its push switch Jack duplicates the signals found on the Control Room Module.

STUDIO

This rotary control is the Studio Master Volume.

STUDIO MON L-R OUTPUTS

For connection to studio power amplifier, or other necessary circuits. The output load impedance is 10 k ohms. The output level is -2.2 dB, 0.775 volt.

MON B L-R OUTPUTS

These RCA Jacks provide a stereo output without a master fader for the Module "B" section on the Buss Master Modules. The output level is -10 dB, 0.3 volt. The output load impedance is 10 kohms.

3.7 TALKBACK MODULE

OSCILLATOR FREQUENCY SELECT SWITCH

A frequency test oscillator is provided for setting up tape recorder levels and checking circuit continuity. Since it is not internally connected, a pair of RCA Jacks are provided on the back so oscillator signals can be patched in where needed.

OSCILLATOR FUNCTION SELECT SWITCH

This 3 position switch determines the status of the test oscillator. Left applies a 40 Hz tone to the slate button, Center is off, and Right applies the output of the device to the rear panel Jacks.

TALKBACK MICROPHONE

A microphone is built in to the top panel allowing the control room personnel to communicate with the performers. The microphone output may be set at differing levels with the 3 volume controls provided.

STUDIO

Level control to the studio monitor module.

AUX A

Level control to the Aux A Buss.

SLATE

Level control to all Buss Master Outputs. The momentary push switch group determines which circuit will receive the final output of the talkback microphone.

HEADPHONE SELECT SWITCH

This switch determines the source of signal for both the (1 watt) back panel headphone jack and the (100 mW) front panel headphone jack. The left position selects the output of the Control Room Module, the center position is off, and the right position selects the output of the Studio Monitor Module. The rotary control immediately below the switch provides a master for both headphone jacks.

3.8 POWER SUPPLY UNIT

The M-15 uses an independent power supply module. Before any operation can take place the multipin connector must be plugged in and power applied. The master A.C. Switch and all fuses will be found in this outboard module.

METER BRIDGE CONNECTOR

The multipin connector must be plugged into the proper receptacle on the back of the mixing console for the meters to function.

4. STANDARD PATCHES

The standard patching setups described here are not rigid commands. Rather, they are provided with the hope that they will stimulate your imagination when you have mixing needs that cannot be solved with the Standard Setup. Line Level is Line Level, whatever the source, and many Line Level inputs to the Model 15 offer a route to a mix that will be used for a function other than the one that is labelled on the top panel. The Jacks on the back are there to be used. Patching is not a crime and may be used to improve the quality of your signal by bypassing unneeded controls, or by making additional control possible in unorthodox ways.

Most people tend to look for a "permanent" set of connections when they set up a mixing system and it is true that the logic of control function just on the top of the mixer takes some time to become familiar with, but multichannel recording has many mixing requirements. A permanent patch will severely restrict flexibility. Don't be afraid to re-plug. There is nothing wrong with the concept. If you can examine the system needs of each mode of operation and re-patch the M-15 to suit, you can get better results.

For this reason we suggest that you plan on access to the back panel of the mixer. Don't set up the system in such a way that you "hide all that mess". Leave yourself room to get at all the connectors. You will need all the options you can get.

If your Cue or Monitor requirements can be reduced to one 8 signal group, extra functions can be performed with the mix on the second 8 signal group. Does the Singer need all 5 tracks of drums in the Cue? If not, a separate Echo Feed to Cue may be possible.

In all patching and connecting of 2 wire single ended circuits two Basic rules are worth remembering.

1. Keep your cable runs SHORT! — as short as possible. Installing a patchbay behind the engineer will require at least 20 foot runs and is not recommended. To the left or right side will allow much shorter runs, and wisest of all is to use our PB-64 mounted on top of the Meter Bridge itself. This location will permit the shortest lengths of cable run, and will improve your sound. Incidentally, short runs cost less, also a benefit. TEAC low loss cable is available and its low capacitance per foot and superior insulation has been designed with systems like this in mind. It is well worth its extra cost. The use of 3 conductor professional cable such as Belden 8H51 should be avoided. Even though it is of excellent quality, it is not the right idea for 2 wire systems. If you are going to make up your own cables we would suggest our 500 ft. bulk rolls or cable such as Belden 8218. Solid core insulator, low capacity wire is what you need. Foam filled 2 conductor is not recommended, as the center conductor will cut through most foam with time, the capacitance will go up, and eventually the cable will short circuit. Don't use it.

2. Multiple Output Connections require impedance matching calculations. Make sure you are not asking too much of your output stages. Permanently connecting several cables to a single output may produce poor quality. If you are not using a patch, unplug it! Convenience may cost you quality, unless you are sure that a multiple connection is well within safe limits. Use the section on impedance matching in this manual, abide by the limitations it covers, and you will get better results.

RECOMMENDED 8 TRACK SETUP WITH 2 ECHO SYSTEMS

The monitor System can now be divided into 2 separate groups and a different function assigned to each.

Monitor A will perform Control Room functions and Buss/Tape comparisons. Aux 3 will now allow Playback Cueing for Overdubs.

Monitor B will give you a Stereo Echo Mix that is separately controllable at all times, and may be recorded along with the Dry Signal if desired. (Re-plug Echo RCV to the buss you wish to use). For clarity, it is shown connected only to Buss 5 and 6, with Jumpers to 3 and 4. Aux 4 will provide a Mono Echo Mix to be used in the Earphones so musicians may hear a more musically pleasing sound. Route the Aux 4 mix to the Aux B Master by depressing the appropriate push switch on the Aux B Master Module. The Aux B Master will now act as a Master Mono Echo Send when the individual Aux 4 "w" pots are rotated rightwards to receive signal only from the Aux 4 section. Echo will also be possible from the input modules of the M-15 if the Aux B Mix Control is used as described on Page 10. The Mono Return is added to the Cue Buss with Echo RCV #1 Pot, Switch Aux A.

Since each Buss Master Line Out is double, you may attach a 2 track to the spare jack. We show Buss 5 and 6 connected, since their meters are more or less centrally located on the Meter Bridge, but any two will serve. If you work closer to them when mixing, use 1 and 2, or 7 and 8. Suit yourself.

16 TRACK REMIX PATCH WITH AN UNORTHODOX DOUBLE STEREO ECHO

This setup completely separates the 16 track monitor section from its normal function as a Control Room Monitor and converts it to Stereo Echo Mixer with full gain and pan.

Listening to the mix you are working on will now be accomplished by using either Aux Line In #1 (Buss Output 5 and 6) or, Aux Line In #3 (2 track playback). The Aux A Buss is connected to a Mono Echo device and returns Echo Signal to "Buss In #5".

The Aux B Buss is connected to a Mono Echo device and return Echo Signal is connected to "Buss In #6".

Having several Echo Chambers to work with will allow more sophisticated image placement. Very realistic and satisfying illusions in stereo are possible by having signal "Dry" on the left and Echo Return from the signal on the right. Building an imaginary "Room" or "Stage" will now be possible, and some otherwise unmixable tracks become easy to make clear in Stereo when Multiple Echo Systems can be used.

RECOMMENDED 16 TRACK SETUP

The basic function discussed in this manual assumes that you will need to play back what you have recorded many times before final mixes are made. Since it is unlikely that you will be recording all 16 tracks at one time, the fact that the M-15 has only 8 buss master modules is not a serious limitation. Here we show each buss master connected to more than one track. Tracks 1 and 9 are on the same buss, #1 and so forth up to Buss 8 Output, connected to tracks 8 and 16. When you are ready to mix to stereo, you will have to change your patch to feed the 2 track. Designed for quick playbacks, the Monitor A and B systems eliminate the need to distrupt the Input Module settings you are working with. Since "Line In" on the Input Module is not used for playback of your recorder in this patch, these Jacks are available for any other unit or units you may have. Moving to "Line In" will, of course, force you to re-set the Input Controls if you have been using a Microphone as an Input.

Only one Echo System is shown. Since most recording is done "dry" or without Echo, one chamber should be sufficient. When you are ready to mix down, more Echo Systems are likely to be useful, so we suggest you look at Patch #3. It will help you understand more about re-mix setups.

There are 2 Stereo and 2 Mono Outputs unused on this drawing because their systems have been committed to Cue in Playback and Control Room Monitor. They are:

Mon A – Stereo
Mon B – Stereo
Aux 3 – Mono
Aux 4 – Mono

5. LEVEL SETTING AND OPERATION CHECK

5.1 LINE IN → ACCESS SEND

1. Apply a -10 dB (0.3V) signal to the LINE INPUT jack on back panel of the Model 301 Input Module.
2. Pull out the jumper between ACCESS SEND and RECEIVE jacks for the channel in which the above signal is injected, and plug in an AC voltmeter to the ACCESS SEND jack. The AC voltmeter recommended here should have an input impedance of 50 k ohms or more, input capacitance less than 20 pF, and maximum sensitivity of -60 dB with a sensitivity selector switch.
3. Set controls on panel of the Model 301 Input Module as follows:
   INPUT select switch: LINE
   TRIM : At about -20
4. For a normal condition of the circuit, the ACCESS SEND output should be -10 dB against a LINE IN signal of -10 dB.
5. If the output is not -10 dB, adjust with TRIM. After this adjustment, the TRIM knob should be between 10 and 15 dB under normal condition.
6. If you notice any malfunction, refer to the preamplifier (Q1 ~ Q6) circuit schematic and check all transistor voltages and signal levels.
7. Check all remaining Input Modules in the same way.
8. Measurement of frequency response, S/N ratio, T.H.D.:

Frequency response:		20 Hz ~ 20 kHz, within ±1 dB
S/N ratio	:	More than 84 dB (using a weighting network)
	or, :	80 dB (measured with a band-pass filter – 20 Hz ~ 20 kHz
	or, :	A more than 78 dB reading on an AC voltmeter with a better than 100 k Hz range can be said as normal.
T.H.D.	:	Less than 0.03 % (at 20 Hz ~ 20 k Hz)

5.2 LINE IN → DIRECT OUT

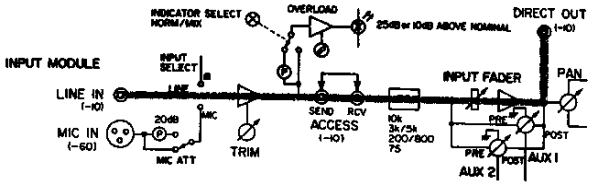

1. Apply a -10 dB (0.3V) signal to the LINE INPUT jack.
2. Plug in an AC voltmeter to the DIRECT OUT jack for the channel in which the above signal is injected.
3. Set controls on panel of the INPUT MODULE as follows:

INPUT select switch:		LINE
TRIM	:	To about -20
EQUALIZER	:	Set to center the 3 k Hz and 200 H/800 Hz switches. Under this condition, response will be flat regardless to setting of the 10 k Hz and 75 Hz control knobs.
INPUT FADER	:	"0" scale

4. The circuit is in normal condition if the DIRECT OUT level is -10 dB against the LINE IN level of -10 dB.
5. If it is slightly off -10 dB, adjust by the TRIM knob. For a normal condition circuit, the TRIM knob position should be between 10 and 15 dB.
6. If you cannot obtain the proper reading, check the circuit.
   If the above Item 5.1 check shows normal but the DIRECT OUT level is incorrect, trouble could be in the INPUT FADER, and IC's U1 and U4. The gain of U1-7 and U4-7 is 1, and that of U4-1 is 10 dB.
   The attenuation of the INPUT FADER set at infinity should be:
   More than 85 dB at 30 Hz
   More than 75 dB at 1 k Hz
   More than 58 dB at 10 k Hz

5.3 LINE IN → LINE OUT/AUX OUT

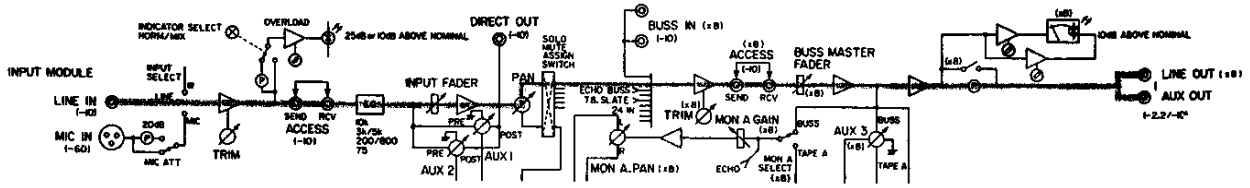

1. Apply a -10 dB (0.3V) signal to the LINE IN jack.
2. Plug in an AC voltmeter to the LINE OUT 1 jack on rear of the Model 303A AUX A Module.
3. Set the level selector switch (S1 ~ S4) on the PCB of the AUX A Module to LO. This selector switch is located as shown in Page 10.

4. Set controls on panel of the Input Module as follows:

INPUT select switch	:	LINE
TRIM	:	At about -20 on scale
EQUALIZER	:	Set to center the 3kHz/5kHz and 200Hz/800Hz switches.
INPUT FADER	:	"0" on scale
ASSIGN	:	1 only ON, switch to the BUSS 1 ~ 4 group

5. Set controls on panel of BUSS MASTER Module 1 (it will be BUSS MASTER 1 as the INPUT Module ASSIGN switch is at 1; if at ASSIGN 2, it will be BUSS MASTER 2) as follows:

TRIM	:	Set to CAL position by full CW rotation
FADER	:	"0" on scale

6. The circuit is in good condition if a -10dB LINE OUT is obtained against a -10dB LINE IN level.
7. If a -10dB output is not obtained, adjust by TRIM on the INPUT Module. The circuit can be said in good condition if the TRIM knob is between 10 and 15 on the scale after this adjustment.
8. If the output greatly differs from the proper level, unplug the jumper between ACCESS SEND and RCV on the Model 302 BUSS MASTER Module, plug in an AC voltmeter to the ACCESS SEND jack and check the level here. Should the output be -10dB (0.3V), check the circuits of the BUSS MASTER FADER and those after it.
   Should the output level be different from -10dB (0.3V), check the circuits between the ASSIGN switch of the INPUT Module and the SUMMING Amplifier in the BUSS MASTER Module.
9. The remaining BUSS MASTER Modules 2 ~ 8 should also be checked in the same way but when the INPUT Module ASSIGN switch is at 5 ~ 8 (when 5 ~ 8 of the INPUT ASSIGN group is ON), re-plug the AC voltmeter to LINE OUT on the rear panel of Model 305B AUX B Module.
10. The equivalent input noise of the summing amplifier U1 in the BUSS MASTER Module PCB is more than 110dB. When the INPUT Module ASSIGN Switches for all 24 channels are selected for the same BUSS MASTER Module, the gain of U1 will be 28 dB. Therefore, the S/N ratio of the summing amplifier under this condition will be 82 dB or more.
    Assuming that 8 channels from among the 24 channels were selected to ASSIGN 1 and the remaining 16 channels were switched to the 5 ~ 8 group, the number of inputs to U1 of the BUSS MASTER Module will then be 8 channels, resulting in a gain of 18 dB, and the S/N ratio will be 92 dB or more.
    As can be seen from the above, as the summing amplifier S/N ratio will vary in accordance to the number of INPUT Module channels to be mixed, the most advantageous method from the S/N point of view is to set the ASSIGN switches of all unused INPUT Modules to the ASSIGN group not being used at the moment.
11. Frequency response and T.H.D. of LINE IN → LINE OUT
    Frequency response: 20Hz ~ 20kHz, within ±1dB
    T.H.D. : Less than 0.03%
12. S/N-1
    When one channel only, from among the 24 channels, is ASSIGNed to the 1 ~ 4 group and the remaining 23 channels ASSIGNed to the 5 ~ 8 group:
    Better than 80dB using a weighting network
    Better than 78dB measured at a range of 20 Hz ~ 20kHz
    Better than 75dB measured with an AC voltmeter of 100k Hz or higher range
13. S/N-2
    When all 24 channels are ASSIGNed to the 1 ~ 4 group and 1 ~ 4 ASSIGN buttons of 1 channel only of the INPUT Modules are depressed:
    Better than 76dB using a weighting network
    Better than 73dB measured at a range of 20 Hz ~ 20kHz
    Better than 70dB measured with an AC voltmeter of 100k Hz or higher range
14. S/N-3
    When the same ASSIGN buttons for all 24 channels are depressed:
    Better than 70dB using a weighting network
    Better than 67dB measured at a range of 20 Hz ~ 20kHz
    Better than 64dB measured with an AC voltmeter of 100k Hz or higher range

5.4 CHECK AND ADJUSTMENT OF THE INPUT MODULE OVERLOAD LED

1. The OVERLOAD indicating LED (red) located above the INPUT FADER monitors the ACCESS SEND level, which is the preamplifier output, and is set to light-up when the output level exceeds predetermined levels. The overload level at which the LED will light-up can be set at two different levels by the INDICATOR Select switch on the AUX B Module panel. In the NORM position of the INDICATOR Select switch, the LED will light-up at +15 dB (5.6V), or in other words, 25dB above the nominal ACCESS SEND level of -10 dB (0.3V). In the MIX position, the light-up or overload level of ACCESS SEND is -5 dB, or in other words, 20 dB lower than that in the NORM position.
   Please read Page 5 on the reasons for providing differences in sensitivity between the NORM and MIX positions.
2. Should the OVERLOAD LED not light-up at the proper level, adjust pot R101 marked PEAK ADJ on the PCB inside the INPUT Module and located near the edge close to the INPUT Fader.

3. Adjusting procedure for the LED light-up point is, apply a -10dB (0.3V) signal to the LINE INPUT jack, unplug the jumper between ACCESS SEND and RECEIVE jacks and plug in an AC voltmeter to the ACCESS SEND jack. Set the AUX B Module INDICATOR SELECT switch to NORM and adjust the INPUT Module TRIM knob for a -10dB (0.3V) reading on the AC voltmeter. Next, raise the LINE INPUT level to +15dB (5.6V) and adjust R101 so that the LED lights-up.
   The LED may remain lighted even though the level is decreased by 1 to 1.5dB from +15dB, but this is due to the hysteresis of the circuit and not a malfunction.
4. When the ACCESS SEND level is -10dB, the slider terminal level of R101 will be -33dB (22mV), and when the ACCESS SEND level goes up by 25dB beyond -10dB, this level will be -8dB (0.4V).
5. The gain of U5-2 will vary in accordance to the ON or OFF state of Q7. When the BUSS MASTER Module INDICATOR SELECT is at NORM, ON will be applied to the INPUT Module edge connector J1-4, and +10V when the INDICATOR SELECT is at MIX. Q7 will be ON at MIX, and OFF at NORM.
   Thus, the gain of U5-2 will be, R26/R27+R27 = 8dB at MIX; and R26 + R28/R26 + R27 + R28 = 28dB at NORM.
   Consequently, against the -10dB (0.3V) ACCESS SEND level, the output level of U5-7 pin #7 will be -25dB (0.056V) at NORM; and -5dB (0.56V) at MIX.
6. The LED will light-up when the U5-1 pin #2 level is 1V (0dB). The potential of 0.7V at the junction of R30 and R31 is rectified by diode D-6, the resulting 1V DC applied to U5-1 pin #2, compared with the level at pin #3. When this rectified DC potential is above 1V, output pin #1 of U5-1 will be -15V; and when below 1V, will be +15V. Q8 will switch ON when the potential is -15V and the LED will light-up.

5.5 AUX 1 ⟶ AUX A SEND

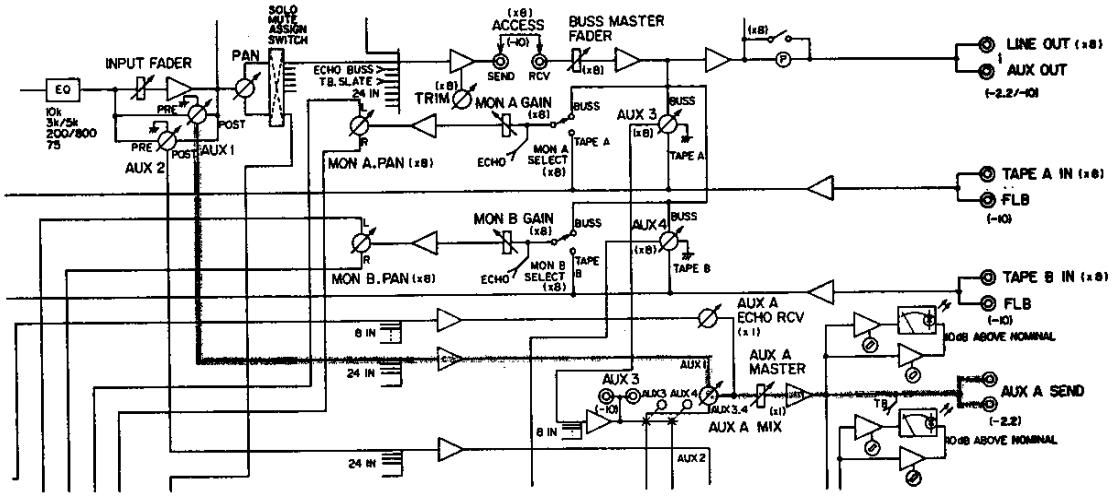

1. Apply a -10dB (0.3V) signal to the LINE INPUT jack of the INPUT Module.
2. Plug in an AC voltmeter to the AUX A SEND jack of the AUX A Module. The AC voltmeter recommended for this measurement should have an input impedance of 50kohms or more, input capacitance less than 20pF, and a sensitivity of -60dB.
3. Set panel controls on the Model 301 Input Module and Model 303A Aux A Module as follows:

INPUT Module

INPUT select switch:	LINE
TRIM	: About -20 on scale
AUX 1	: At max. CCW or CW (PRE-FADER at CCW, POST FADER at CW)
FADER	: At "0" on scale

AUX A Module

AUX A MIX	: Max. CCW
AUX A MASTER	: At "0" on scale

4. The circuit is in normal condition if the AUX A SEND output is -2.2dB (0.775V) against a -10dB LINE IN level.
5. If the output is not -2.2dB, adjust the INPUT Module TRIM knob. The circuit is in normal condition if the TRIM adjustment is between 10 and 15dB on the scale.
6. If the circuit is not functioning properly, compare the levels with the block diagram and check the DC voltages and signal levels in the AUX A Module circuit schematic.
7. Check the AUX 1 signals from all remaining 23 channels of the INPUT Module in the same way.

5.6 AUX 2 → AUX B SEND

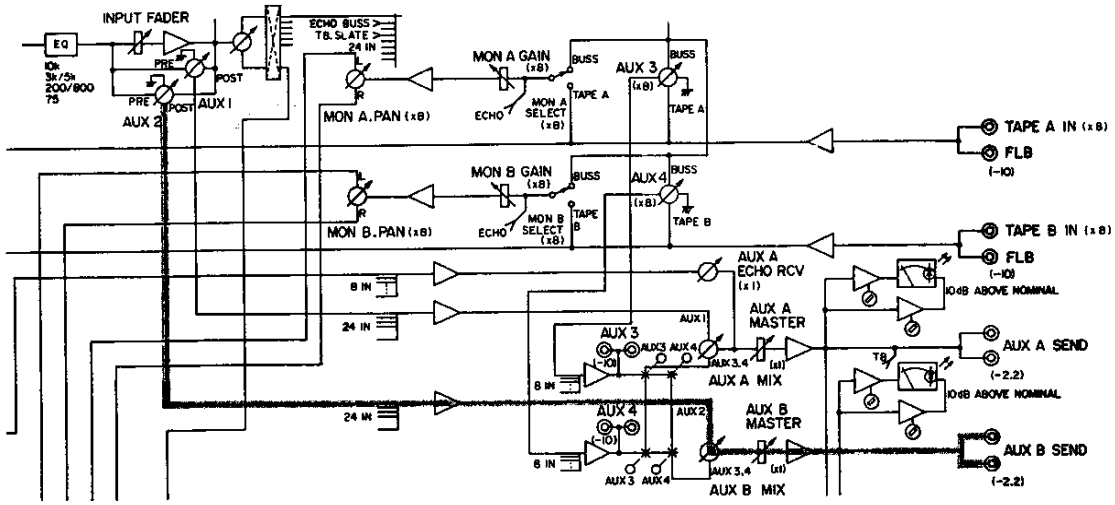

1. Apply a -10 dB (0.3V) signal to the Model 301 Input Module LINE INPUT jack.
2. Plug in an AC voltmeter to the Model 303B AUX B Module AUX B SEND jack.
3. Set the panel controls on the Model 301 Input Module and Model 303B Aux B Module as follows:

INPUT Module

TRIM select switch	:	LINE
TRIM	:	About -20 on scale
AUX 2	:	At max. CCW or CW (PRE-FADER at CCW, POST FADER at CW)
FADER	:	At "0" on scale

AUX B Module

AUX B MIX	:	At max. CCW
AUX B MASTER	:	At "0" on scale

4. The circuit is in normal condition if the AUX B SEND output is -2.2 dB (0.775V) against a -10 dB LINE IN level.
5. If the output is not -2.2 dB, adjust the INPUT Module TRIM knob. The circuit is in normal condition if the TRIM adjustment is between 10 and 15 dB on the scale.
6. If the circuit is not functioning correctly, compare the levels with the block diagram and check the DC voltages and signal levels in the AUX B Module circuit schematic.
7. Check the AUX 2 signals from all remaining 23 channels of the INPUT Module in the same way.

5.7 LINE IN → LINE OUT → AUX 3 → AUX A SEND

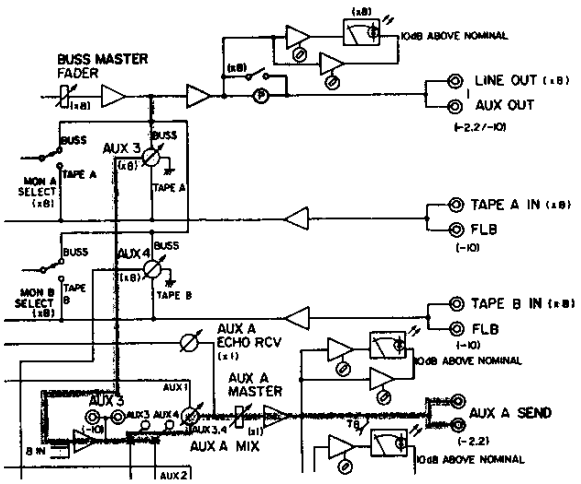

1. Checking procedures for LINE → LINE OUT are the same as in paragraph 5.3.
2. With the signal from LINE IN being ASSIGNed to LINE OUT 1, a -2.2 dB (0.775V) output will be obtained from AUX A SEND by setting the panel controls of AUX A Module as follows:

BUSS MASTER Module 1

AUX 3	:	At max. CCW (BUSS)

AUX A Module

AUX A MIX	:	At max. CW (AUX 3 or AUX 4)
Push switch	:	Depress AUX 3 (ON)
AUX A MASTER	:	At "0" on scale

3. When the LINE OUT 1 level is -10 dB (0.3V), the AUX A SEND output will be -2.2 dB (0.775V).

4. If the output is not -2.2 dB, check the AUX 3 output for a level of -10 dB (0.3V).
5. If the AUX 3 output is at the correct -10 dB level, make sure the controls had been set properly as detailed in above Item 2), and as a last step check the DC voltages, in the last stage line amplifier of AUX A SEND, with the circuit schematic.

5.8 AUX 3 → AUX B SEND

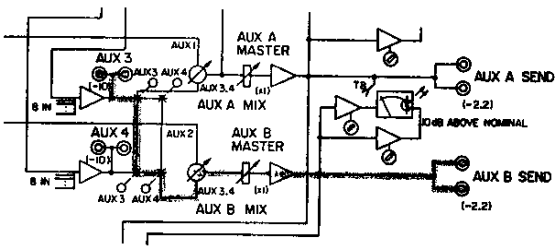

1. Following the procedures in above paragraph 5.7, depress (ON) the push switch AUX 4 of the AUX A Module. Other settings should remain as in above 5.7.
2. Plug an AC voltmeter into the AUX B SEND jack on rear panel of the AUX B Module and check the level. The circuit is good if it is -2.2 dB (0.775V).

5.9 LINE IN → LINE OUT → AUX 4 → AUX B SEND

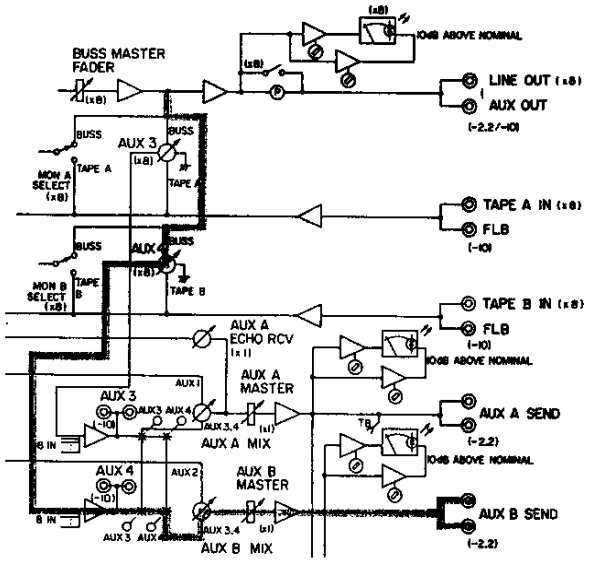

1. Follow the same procedure of paragraph 5.7.
2. Set the panel controls as follows:

BUSS MASTER Module 1
AUX 4 : At max. CCW (BUSS)

AUX B Module
AUX B MIX : At max. CW (AUX 3 or AUX 4)
Push switch : Depress AUX 4 (ON)
AUX B MASTER : At "0" on scale

3. The circuit is in good condition if -2.2 dB (0.775V) is obtained at the AUX B SEND jack on rear panel of the AUX B Module.

5.10 AUX 4 → AUX A SEND

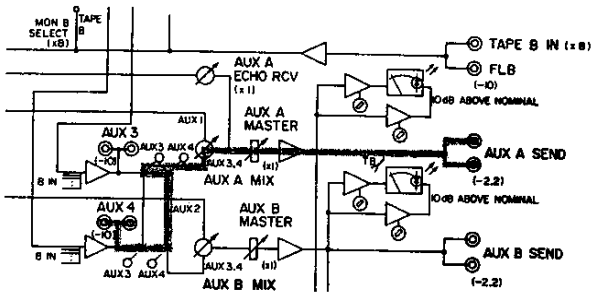

1. Following the procedures in above paragraph 5.8, depress (ON) the push switch AUX 3 on the AUX B Module.
2. Plug an AC voltmeter into the AUX A SEND jack on rear panel of the AUX A Module and check the level. The circuit is in good condition if the level is -2.2 dB (0.775V).

5.11 LINE OUT → MON A LEFT/RIGHT

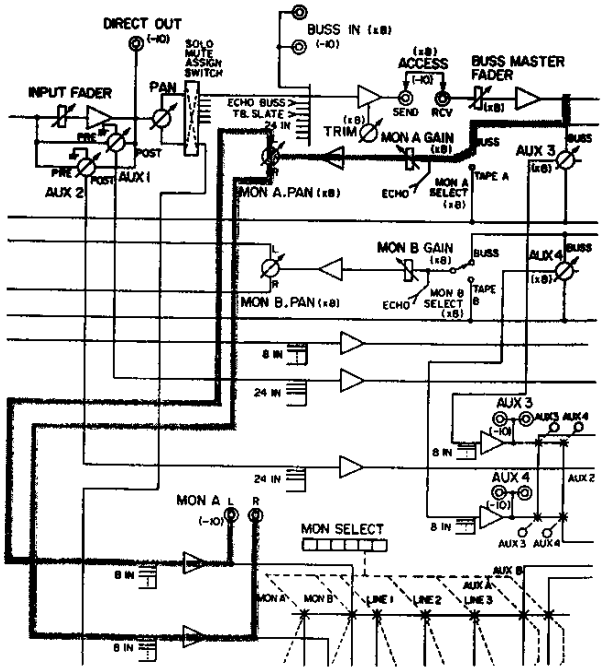

1. Complete the check in paragraph 5.3 before going to the procedure below. After setting the controls so that an output is obtained at LINE OUT 1, set the Model 302 BUSS MASTER Module controls as follows:
   MON A SELECT : BUSS
   MON A PAN : At CCW or CW
   MON A GAIN : At "0" on scale
2. Plug an AC voltmeter into either the LEFT or RIGHT jack of MON A on rear panel of Model 305A Control Monitor Module. With the MON A PAN control at full CCW, the LEFT output should be -10 dB (0.3V), and the RIGHT output less than -75 dB (at 1 KHz). When the MON A PAN knob is rotated full CW, the LEFT output will be less than -75 dB, and the RIGHT output -10 dB (0.3V). When the MON A PAN knob is at "0" on the scale, both LEFT and RIGHT output levels will be -12 dB ~ -14 dB.
3. The same condition also applies to MON A of BUSS MASTER Modules 2 through 8.

5.12 LINE OUT 1 → MON B LEFT/RIGHT

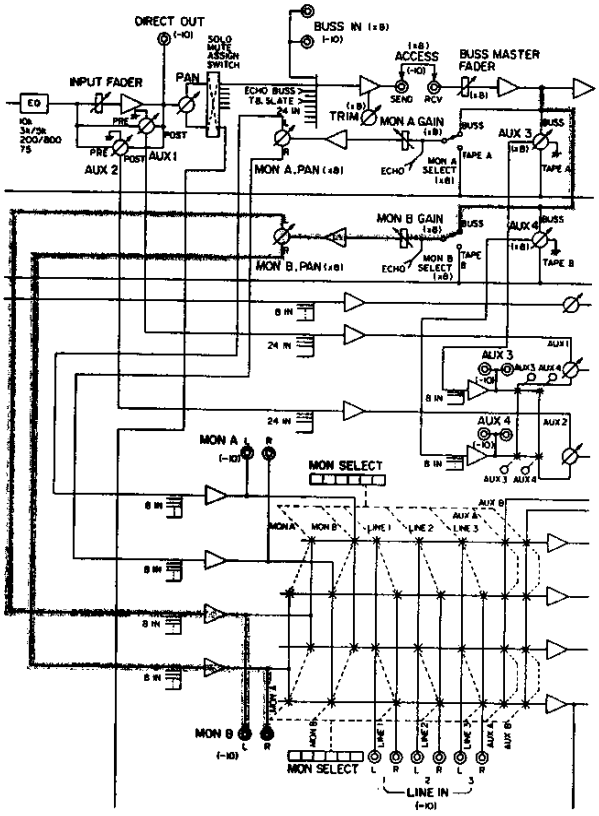

1. Carry out the following with the same setting of paragraph 5.11.
2. Set controls of the Model 302 BUSS MASTER Module 1 as follows:
   MON B SELECT : BUSS
   MON B PAN : At max. CCW or CW
   MON B GAIN : At "0" on scale
3. Plug an AC voltmeter to the LEFT or RIGHT MON B jack on the Model 305B Studio Monitor Module. When the MON B PAN is set to full CCW position, the LEFT output will be -10 dB (0.3V), and the RIGHT output less than -75 dB (at 1 KHz). When the MON B PAN is set to full CW position, the LEFT output will be less than -75 dB, and the RIGHT output -10 dB (0.3V). When MON B PAN is at "0" on the scale, both the LEFT and RIGHT outputs will be -12 dB ~ -14 dB.
4. The same condition also applies to MON B circuit of BUSS MASTER Modules 2 through 8.

5.13 SOLO CIRCUIT

1. When the SOLO button on each INPUT Module is depressed, the signal of the depressed channel only can be monitored by the control room output of the Model 305A Control Room Monitor Module, and the headphone output of the Model 304 Talkback Module.
2. Apply a -10 dB (0.3V) signal to the LINE IN jack, set the control for -10 dB (0.3V) at DIRECT OUT, depress the SOLO button, and set the SOLO level control on the Control Room Monitor Module at maximum.
3. The circuit will be in good condition if -2.2 dB (0.775V) is obtained from the control room monitor LEFT/RIGHT output regardless to setting of the Model 305A.
4. There will be a 100 mW output from the HEADPHONE jack, also without regard to setting of the Model 304 panel controls.
5. The LED located above the SOLO knob on the Model 305A Module will light-up whenever the SOLO button on the INPUT Module is depressed.

5.14 CONTROL ROOM MONITOR CIRCUIT

1. Control room monitoring is controlled by 7 push switches and a rotary type CONTROL ROOM level control of the Model 305A Control Room Monitor Module.
2. The MON A, MON B, LINE-1, -2, -3, AUX A, and AUX B signals routed to the Control Room Monitor Module are all -10 dB (0.3V) and after suitably adjusted in level by the CONTROL ROOM level control, fed to each output jack. The amplifier following this pot has a gain of 28 dB.

5.15 STUDIO MONITOR CIRCUIT

1. The circuit and level schematic of this Studio Monitor Circuit are identical to those of the Control Room Monitor Circuit.

5.16 ECHO RCV CIRCUIT

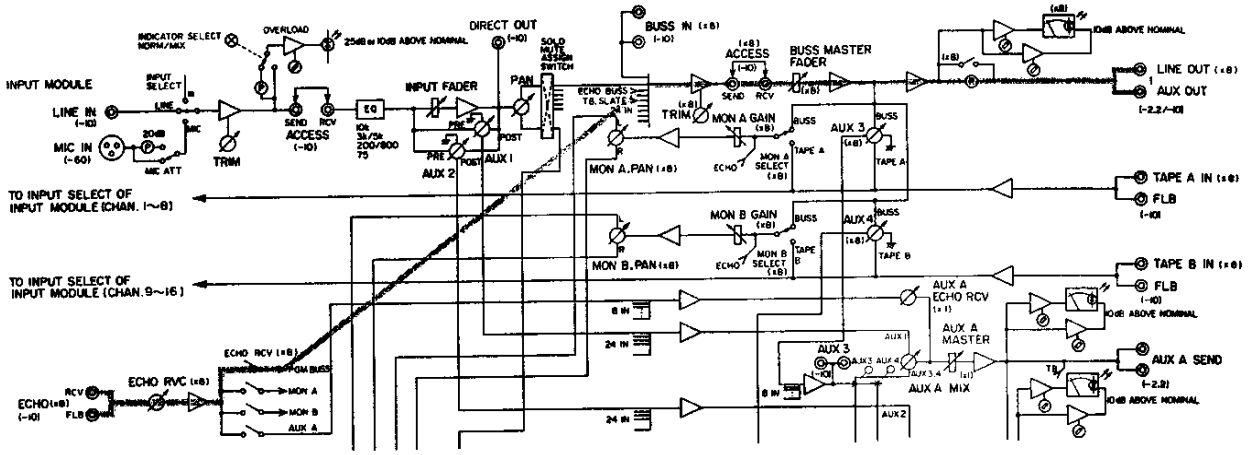

1. The ECHO RCV jack is provided on the rear panel of each BUSS MASTER Module. As the ECHO RCV input impedance is 20 kohms, the signal from an Echo Machine can be fed to ECHO RCV jacks of more than two channels, depending on the Echo Machine load impedance, by connecting the ECHO FLB with the ECHO RCV jack of another channel.
2. Apply a -10 dB (0.3V) signal to the ECHO RCV jack of BUSS MASTER Module 1.
3. Set the ECHO RCV pot fully CW.
4. Set the controls of the BUSS MASTER Module as follows:
   TRIM : CW to the CAL. position
   FADER : To "0" on scale
5. The circuit is in good condition if the output level of LINE OUT 1 is -10 dB (0.3V).
   Note: Be sure the Level Selector Switch (S1), on the PCB of the AUX A Module, is set to LO (-10 dB) side.
6. Check the ECHO RCV circuits of the other BUSS MASTER Modules by the same procedure.

5.17 METER CALIBRATION AND THE LED CIRCUIT

1. The adjusting points in the PCB of the M-15 are, the Overload LED Igniting Level Adjusting Pot in the Model 301 Input Module; four Meter Calibrating Pots and four Meter LED Igniting Level Adjusting Pots in the Model 303A AUX A Module; four Meter Calibrating Pots and four Meter LED Igniting Level Adjusting Pots in the Model 303B AUX B Module.
2. The circuits are identical between Model 303A and 303B.
3. The controls are set so that the LINE OUT 1 output level will be -10 dB (0.3V).
   Note: During this procedure, be sure the Level Selector in the Model 303A AUX A Module and Model 303B AUX B Module PCB's are at LO.
4. Under this condition, adjust R202 in the Model 303A AUX A Module PCB so that the extreme left VU meter reads 0 VU.
5. From the condition of Item 3, above, raise the output level 10 dB for 0 dB (1 volt) output. Then, adjust R201 so that the LED inside the extreme left VU meter lights-up.
6. As U5-1 has a gain of 11.8 dB, when a 0 dB (1V) input signal which is 10 dB above the LED igniting level, is applied to pin #3 of U5-1 there will be a +11.8 dB output from pin #1. This output is then divided by R32 and R33, the cathode voltage of D1 will be -2 dB (0.8V), the signal rectified and a 1V DC applied to pin #2 of U7-1. Adjust R201 so that the voltage of U7-1 pin #3 will be 1 volt DC. When the voltage of pin #2 goes higher than pin #3, the output voltage of U7-1 will be -16 V and as the anode of D2 will be 0 V, the base current of Q1 will flow to R38 via D3 to switch ON Q1 and the LED will light-up.
7. The remaining R203 through R208 are adjusted in the same way. Adjusting procedures for R201 through R208 in the Model 303B are also the same.

5.18 TEST TONE OSCILLATOR

1. The Test Tone Oscillator has a 3-position (TEST/OFF/SLATE) selector switch. At TEST, a -10 dB signal is obtained at the OSC OUT jack on the Model 304 Talkback Module rear panel; at OFF there will be no signal, and at SLATE, in addition to an output signal at OSC OUT, a test tone will also be applied to the Summing Amplifier U1-2 of the BUSS MASTER Module via the SLATE switch on the Talkback Module.
2. The oscillator has 6 frequencies of test tones and the frequency of each is determined by $f = 1/2\pi CR$. The conditions in this circuit are, C = C7 = C8 = C9,

R = R14 ~ R19 = R20 ~ R25 = R26 ~ R31. C44 is for stabilizing the oscillation.

5.19 TALKBACK CIRCUIT

1. Signals from the microphone installed in the Talkback Module are amplified about 9 dB by U2-7 and applied to pots R101, R102 and R103 which are the SLATE, AUX A and STUDIO knobs on the panel.
2. The signal after passing through the SLATE pot goes through S101 and the SLATE switch S104-3, further amplified about 18 dB by U2-1, and applied to the BUSS MASTER Module Summing Amplifier via the edge connector J1-6.
3. The signal passing through the AUX A pot then goes through S104-2, amplified about 9 dB by U3-1 and applied to the AUX A Module edge connector J1-4 via the edge connector J1-11.
4. The signal passing through the STUDIO pot then passes through switch S104-1, amplified by a gain factor of 1 by U3-7, and applied to both the TALKBACK amplifier and the Model 305A Control Room Monitor Module.

5.20 TAPE IN CIRCUIT

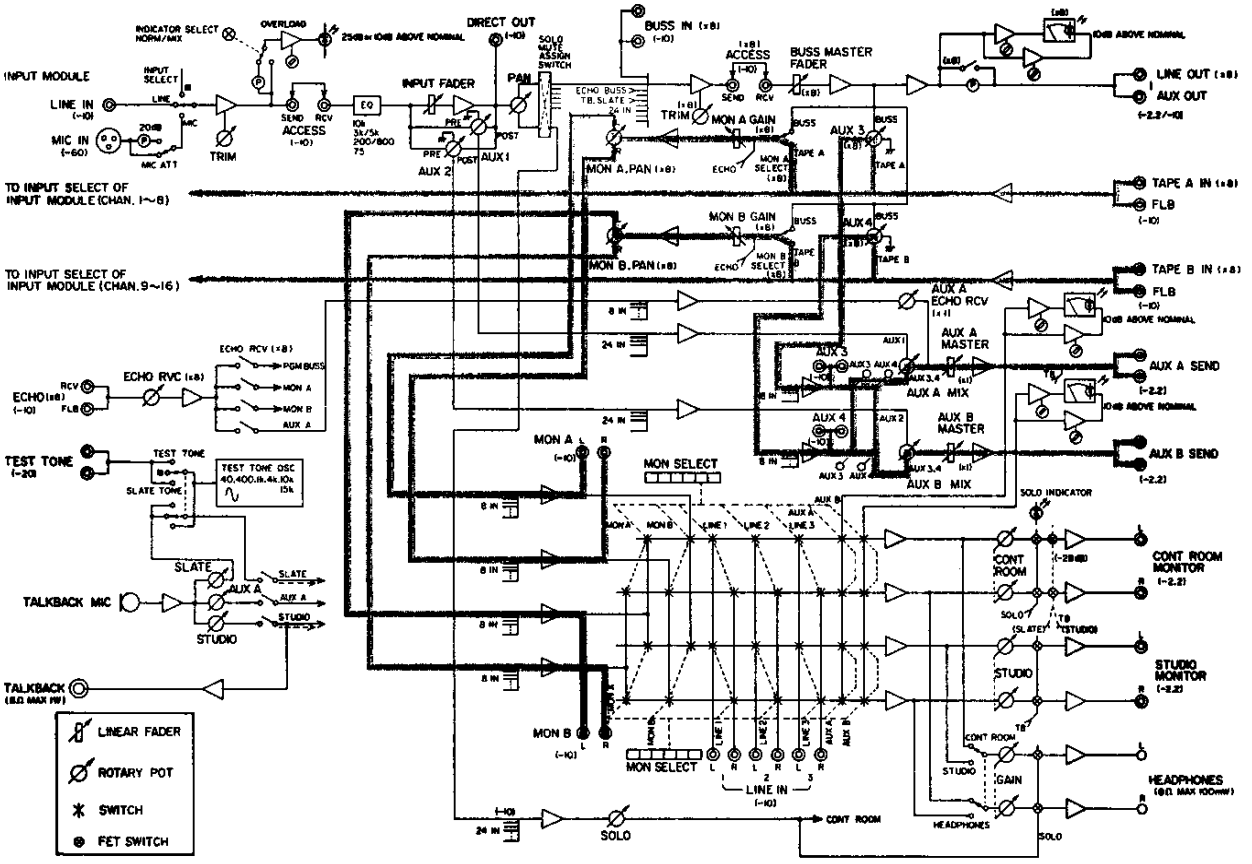

TAPE A IN and TAPE B IN jacks are provided on the rear panel of each BUSS MASTER Module bringing the total TAPE IN's to 16.

1. U6 in the BUSS MASTER Module is a buffer amplifier having a gain of 1.
2. The output of U6 is split into three.
   The first one is applied to the INPUT Select Switch of the INPUT Module. This level is the same with the LINE INPUT. The second is applied to the AUX 3 and AUX 4 circuits. When the AUX 3 or AUX 4 pots of the BUSS MASTER Module are set CW, the TAPE IN signals will be output from the AUX 3 and AUX 4 jacks on the rear panels of the AUX A and AUX B Modules. The third one is applied to the MON A and MON B circuits. With the BUSS MASTER Module MON A and MON B Select Switches at TAPE, and the MON A Gain, MON A Pan, MON B Gain, and MON B Pan set as described in paragraphs 5.11 and 5.12, a -10 dB (0.3V) output is obtained from MON A and MON B.

5.21 MIC INPUT (MODEL 301 INPUT MODULE)

1. The MIC IN circuit is identical to the already explained LINE IN circuit but with a Mic transformer and MIC ATT pad added.
2. The MIC ATT switch has a 0 and 20 position, and when set to 20 will insert a 20 dB O-pad before the mic transformer.
3. In the XLR 3-31 connector, pin #3 is "hot," pin #2 "cold," and pin #1 is for "shield."
4. Set MIC ATT to 0 and INPUT SELECT to MIC. On applying a -60 dB (1 mV) signal to the XLR 3-31 connector and setting the TRIM control about full CW, a -10 dB output is obtained at the ACCESS SEND jack. Since the TRIM control is continuously variable over a 40dB range, input signals up to -20dB can be controlled without the mic pad.
   As the pre-amplifier consisting of Q1 ~ Q6 has a maximum output level of +18 dB (8 V), there is more than 28 dB of headroom but leaving a slight margin to spare, the OVERLOAD LED is set to light-up at +15 dB (5.6V). [Refer to paragraph 5.6, above.]
5. The frequency response and S/N ratio of the mic amplification chain from MIC IN to LINE OUT can be said to be determined by the performance of the pre-amplifier, from the XLR 3-31 input through the ACCESS SEND jack, and thus directly represent the performance of the M-15. This can be said because the S/N ratio without the summing amplifier is better than the S/N ratio of the pre-amplifier. Therefore, connect an AC voltmeter to the ACCESS SEND jack to measure the frequency response and S/N ratio. The circuit can be said to be in good condition if the frequency response is within ±1 dB, 20 Hz ~ 20 kHz; the S/N ratio better than 73 dB (measured with a frequency range of 20 Hz ~ 20 kHz) against an input of -50 dB (3 mV); or if better than 76 dB (with a weighting network). It can also be said as good if the S/N ratio is better than 70 dB when measured with an AC voltmeter having a frequency range of more than 100 KHz.

5.22 PHANTOM POWER SUPPLY

1. Consideration for wiring-in a phantom power supply is provided in the M-15. However, in view of the fact that there are numerous different voltages according to each type of microphone, and that mistaken handling might damage the microphone, and also, a good knowledge of phantom power supply circuitry is required for assembly, the printed circuitry ONLY is provided.
   a) Open the lid of the PS-15 Power Supply Unit and looking inside to the right of the Unit from the front panel side, install a 10μF, 50V capacitor to the proper holes marked C27, and a 0.01μF, 50V capacitor into the holes marked C28.
   b) Install two 4.7 kohm resistors into markings R69 and R70 on the connector panel side PCB in the INPUT Module.
2. As there is no transformer winding for the phantom supply in the PS-15 unit, a proper voltage matching the microphone must be supplied to the XLR type 2P connector on the PS-15 front panel. The connector pin designations are, +DC to pin #2, and 0V to pin #1.

PARTS LIST

Title	Model 15 Main Frame	Assembly No.	60853940
Ref. No.	Description		Parts No.
1	Nameplate Ass'y		60072540
2	Panel, meter		60362362
3	Escutcheon, meter 1		60060490
4	" , " 2		60060490-01
5	" , " 3		60060490-02
6	" , " 4		60060490-03
7	" , " 5		60060490-04
8	" , " 6		60060490-05
9	" , " 7		60060490-06
10	" , " 8		60060490-07
11	" , Aux A		60060490-08
12	" , Aux B		60060490-09
13	Meter		60550280
14	Plate, mounting meter		60374460
15	Clamp, cable A		55340410
16	Number plate, meter		60362350
17	" " , rear		60362340
18	Chassis, rear		60374470
19	Plate, mounting, meter chassis A		60374420
20	Meter chassis B		60374430
21	Plate, module guide		60374480
22	Plate, mounting, rear chassis A		60374440
23	" , " , " " B		60374450
24	Shaft, hinge		60030660
25	Side chassis A assembly		60374531
26	Side chassis B assembly		60374541
27	Plate, side, meter A		60362290
28	" , " , " B		60362300
29	" , " , " A		60380720
30	" , " , " B		60380730
31	" , side A		60380740
32	" , side B		60380750
33	Base, mounting, rubber bumper		60375420
34	Bumper, rubber		16361600
35	Angle, bottom cover		60375190

Ref. No.	Description	Parts No.
36	Baseboard	60380761
37	Pad, arm rest	60380770
38	Chassis, front	60374491
39	Sash, number plate	60362330
40	Connector board assembly	60853950
41	Spacer, metal	50277650
42	Screw, mounting, knurled	60030670
43	Angle, side B	60362320
44	Angle, side A	60362310
45	Plate, mounting, mother board	60374501
46	Angle	60375180

PARTS LIST
Model 15 Main Frame
REV._____

Model 301 **Input Module**

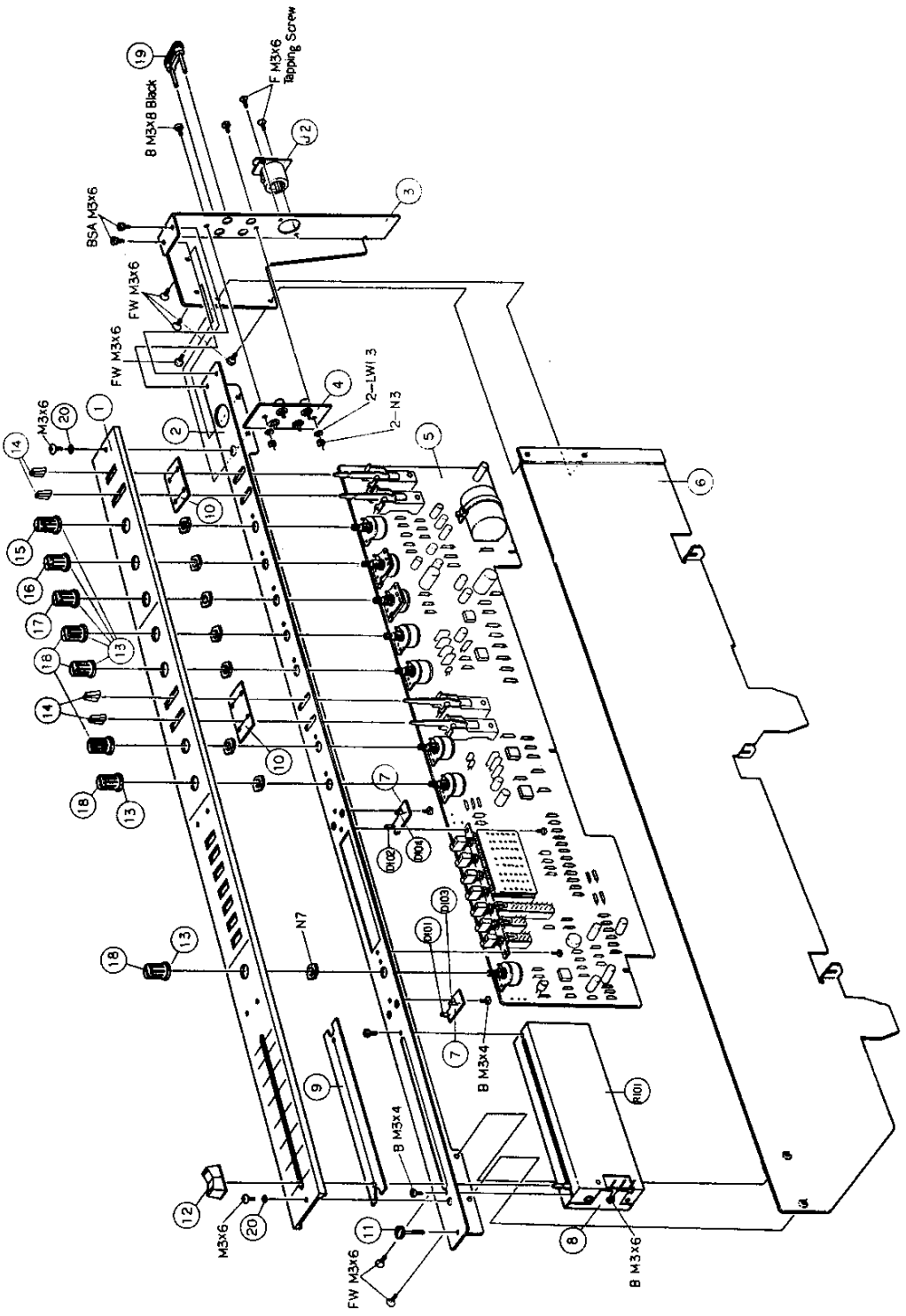

EXPLODED VIEW
Input module (M-301)
REV. _____

PARTS LIST

Title	Input Module	Assembly No. 60853960
Ref. No.	Description	Parts No.
D101 D102	LED (red), SLP-114B	60483340
D103 D104	LED (green), SLP-214B	60483330
J2	Connector, cannon, XLR-3-31	60520070
R101	Fader, slide (100mm)	60412130
1	Panel, dress, input module	60362371
2	Chassis assembly	60374551
3	Panel, connector	60374620
4	Board, RCA jack	60523050
5	Input amplifier PCB assembly	60854060
6	Plate, shield	60374710
7	PCB, LED	60504671
8	Dust cover, fader	60375150
9	Dust screen, fader, A	60060640
10	Dust screen, switch, A	60060620
11	Captive screw	60030730
12	Knob, slide fader	60060170
13	Knob, B-15S-2	60060531
14	Knob, lever	60060501
15	Cap, knob, B-15S-2, 236 (red)	60060561
16	" , " , " , 203 (orange)	60060551
17	" , " , " , 377 (green)	60060581
18	" , " , " , 505 (ivory)	60060541
19	Shorting bar	51240510
20	Washer, W3¢	60030680

PARTS LIST
Input Module
(Model 301)
REV._____

Model 302 Buss Master Module

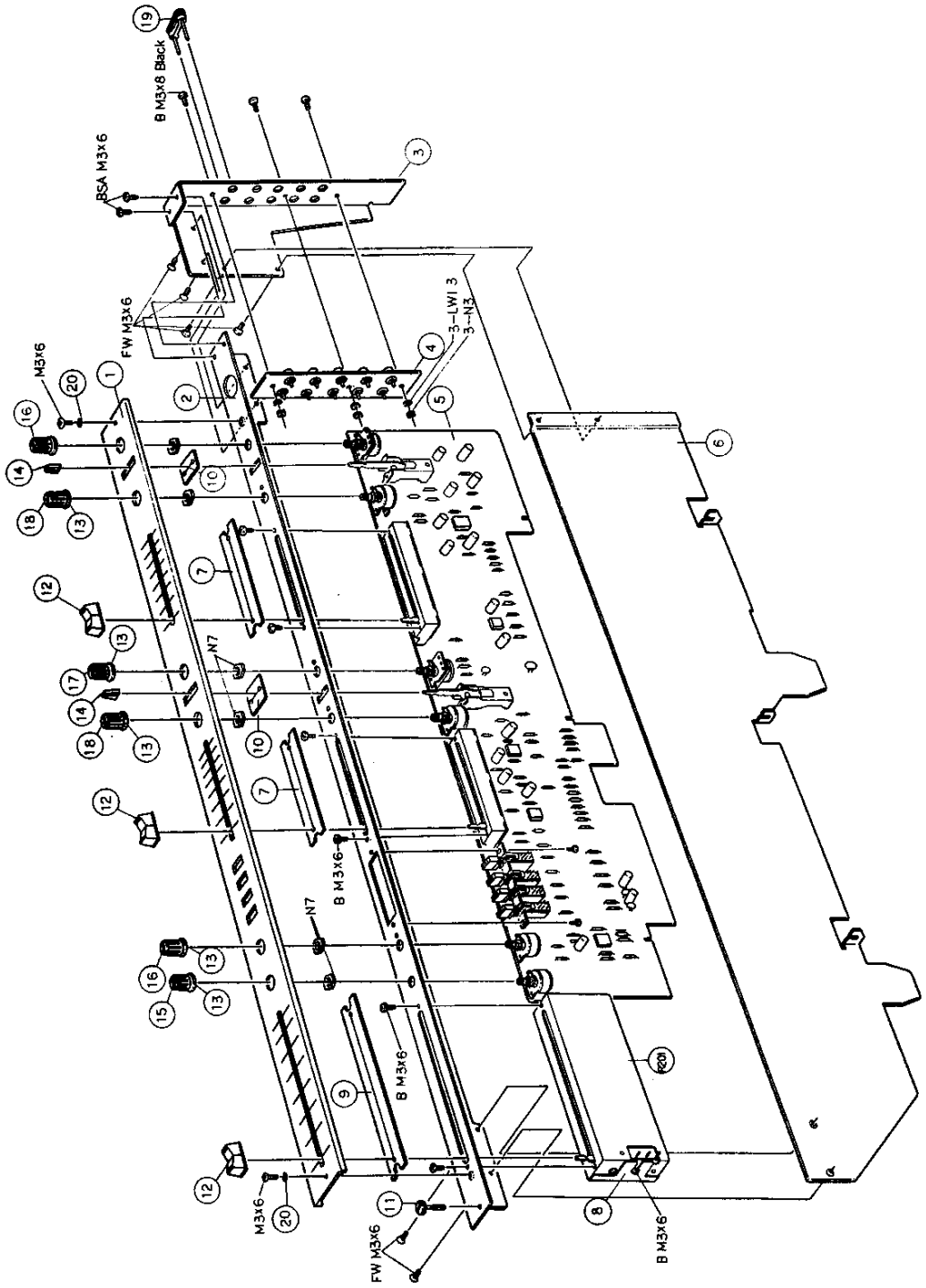

EXPLODED VIEW
Buss master module (M-302)
REV. _____

PARTS LIST

Title	Buss Master Module	Assembly No. 60853970
Ref. No.	Description	Parts No.
R201	Fader, slide (100mm)	60412130
1	Panel, dress, buss master module	60362381
2	Chassis assembly, buss master module	60374581
3	Panel, connector, buss master module	60374631
4	Board, RCA jack	60523070
5	Buss master amplifier PCB assembly	60854070
6	Plate, shield	60374710
7	Dust screen, fader, B	60060650
8	Dust cover, fader	60375150
9	Dust screen, fader, A	60060640
10	Dust screen, switch, B	60060630
11	Captive screw	60030730
12	Knob, slide fader	60060170
13	Knob, B-15S-2	60060531
14	Knob, lever switch	60060501
15	Cap, knob, B-15S-2 236 (red)	60060561
16	" , " , " 203 (orange)	60060551
17	" , " , " 377 (green)	60060581
18	" , " , " 505 (ivory)	60060541
19	Shorting bar	51240510
20	Washer, W3¢	60030680

PARTS LIST
Buss Master Module
(Model 302)
REV._____

Model 303A Aux A Module

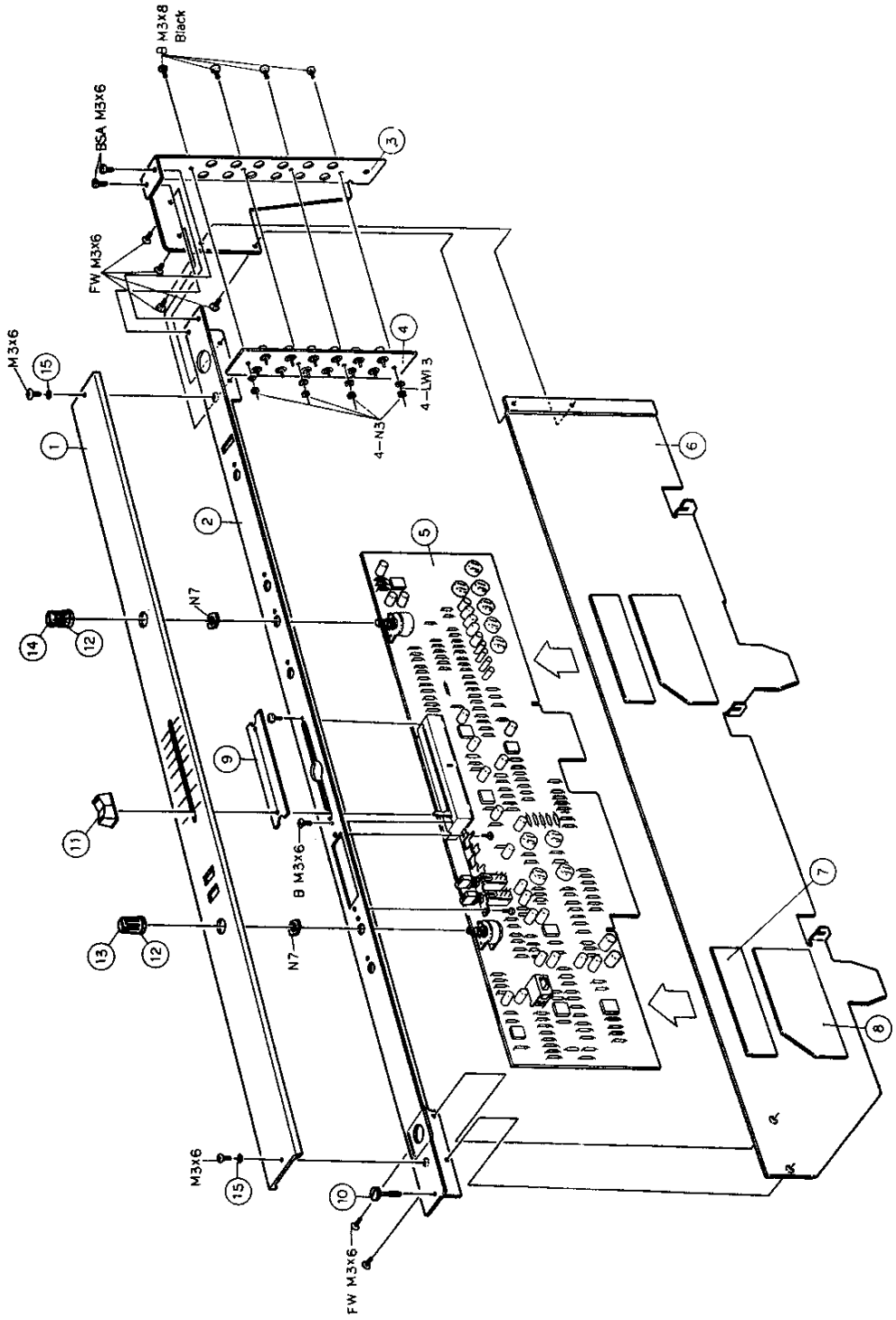

EXPLODED VIEW
Aux A module (M-303A)
REV. _____

PARTS LIST

Title	Aux-A Module	Assembly No. 60853980
Ref. No.	Description	Parts No.
1	Panel, dress, Aux-A module	60362391
2	Chassis assembly	60374601
3	Panel, connector, Aux-A module	60374640
4	Board, RCA jack	60523080
5	Aux-A amplifier PCB assembly	60854080
6	Plate, shield	60374710
7	Insulator A, sheet	60530290
8	" B, "	60530300
9	Dust screen, fader, B	60060650
10	Captive screw	60030730
11	Knob, slide fader	60030680
12	Knob, B-15S-2	60060531
13	Cap, knob, B-15S-2, 203 (orange)	60060551
14	" , " , " , 505 (ivory)	60060541
15	Washer, W3¢	60030680

PARTS LIST
Aux-A Module
(Model 303A)
REV._____

Model 303B Aux B Module

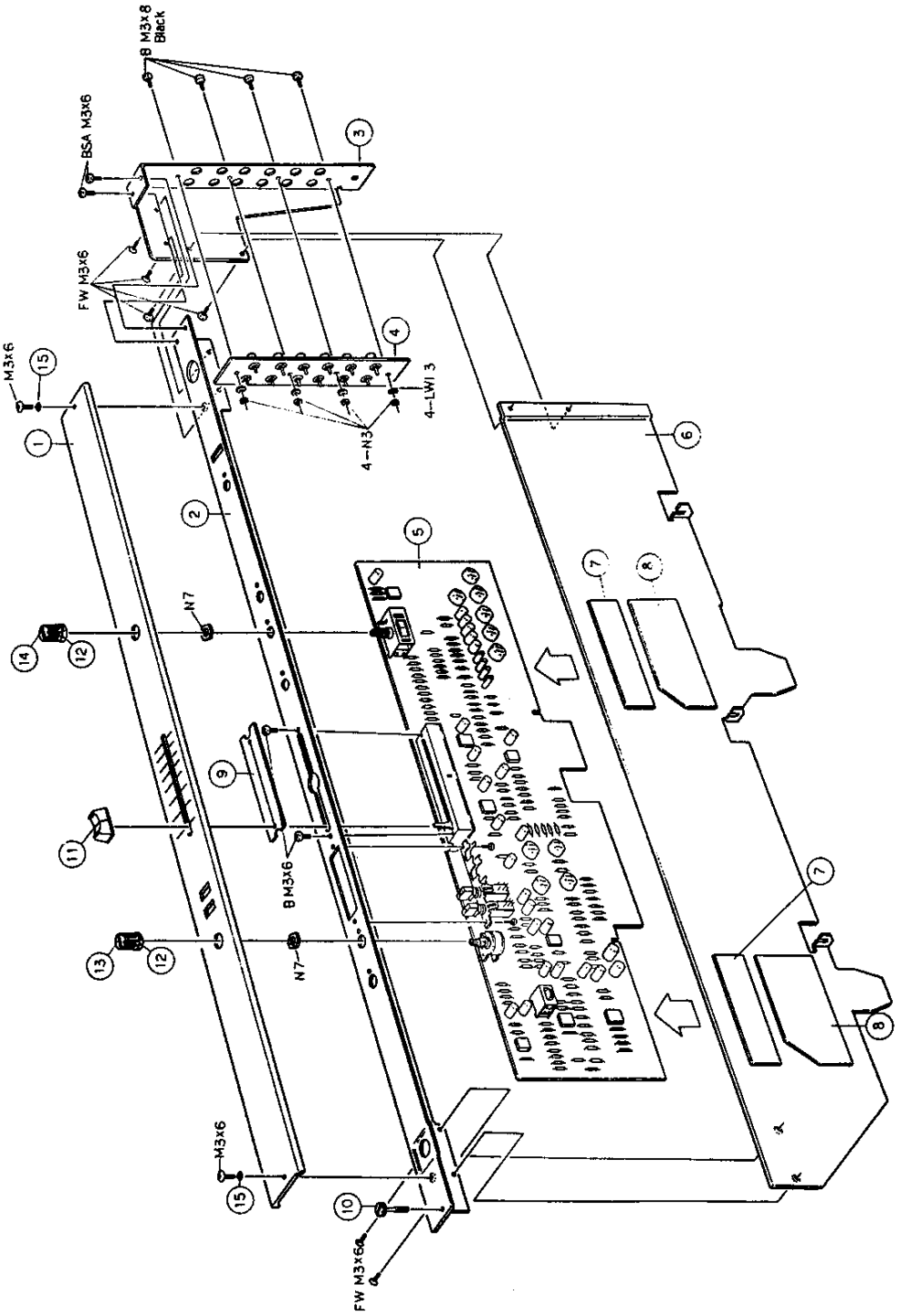

EXPLODED VIEW
Aux B module (M-303B)
REV. _____

PARTS LIST

Title	Aux-B Module	Assembly No. 60853990
Ref. No.	Description	Parts No.
1	Panel, dress, Aux-B module	60362401
2	Chassis assembly	60374601
3	Panel, connector, Aux-B module	60374650
4	Board, RCA jack	60523080
5	Aux-B amplifier PCB assembly	60854090
6	Plate, shield	60374710
7	Insulator A, sheet	60530290
8	" B, "	60530300
9	Dust screen, fader, B	60060650
10	Captive Screw	60030730
11	Knob, slide fader	60060170
12	Knob, B-15S-2	60060531
13	Cap, knob, B-15S-2, 377 (green)	60060581
14	" , " , " , 505 (ivory)	60060541
15	Washer, W3¢	60030680

PARTS LIST
Aux-B Module
(Model 303B)
REV._____

Model 303B Aux B Module

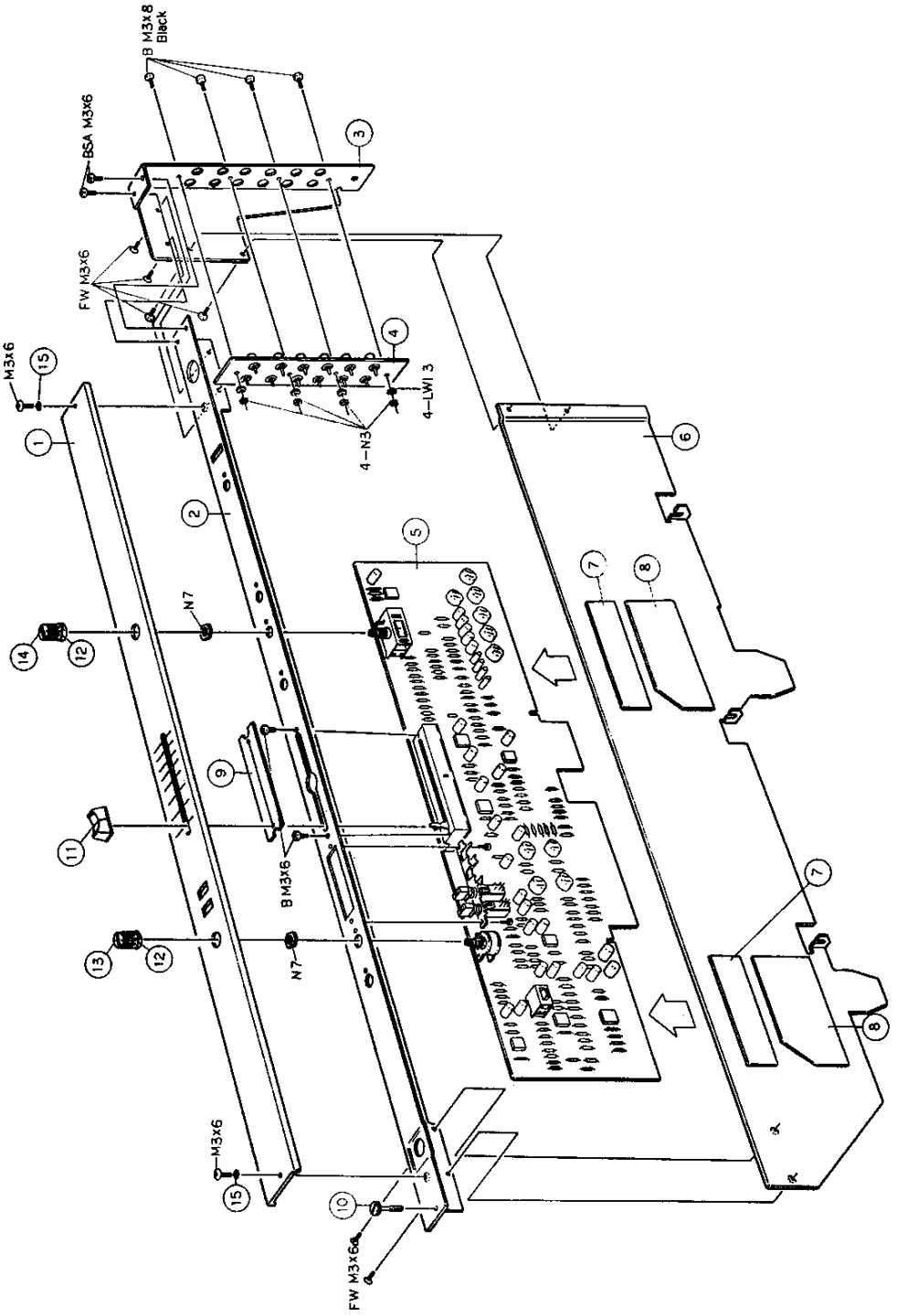

EXPLODED VIEW
Aux B module (M-303B)
REV. _____

Model 304 Talkback Module

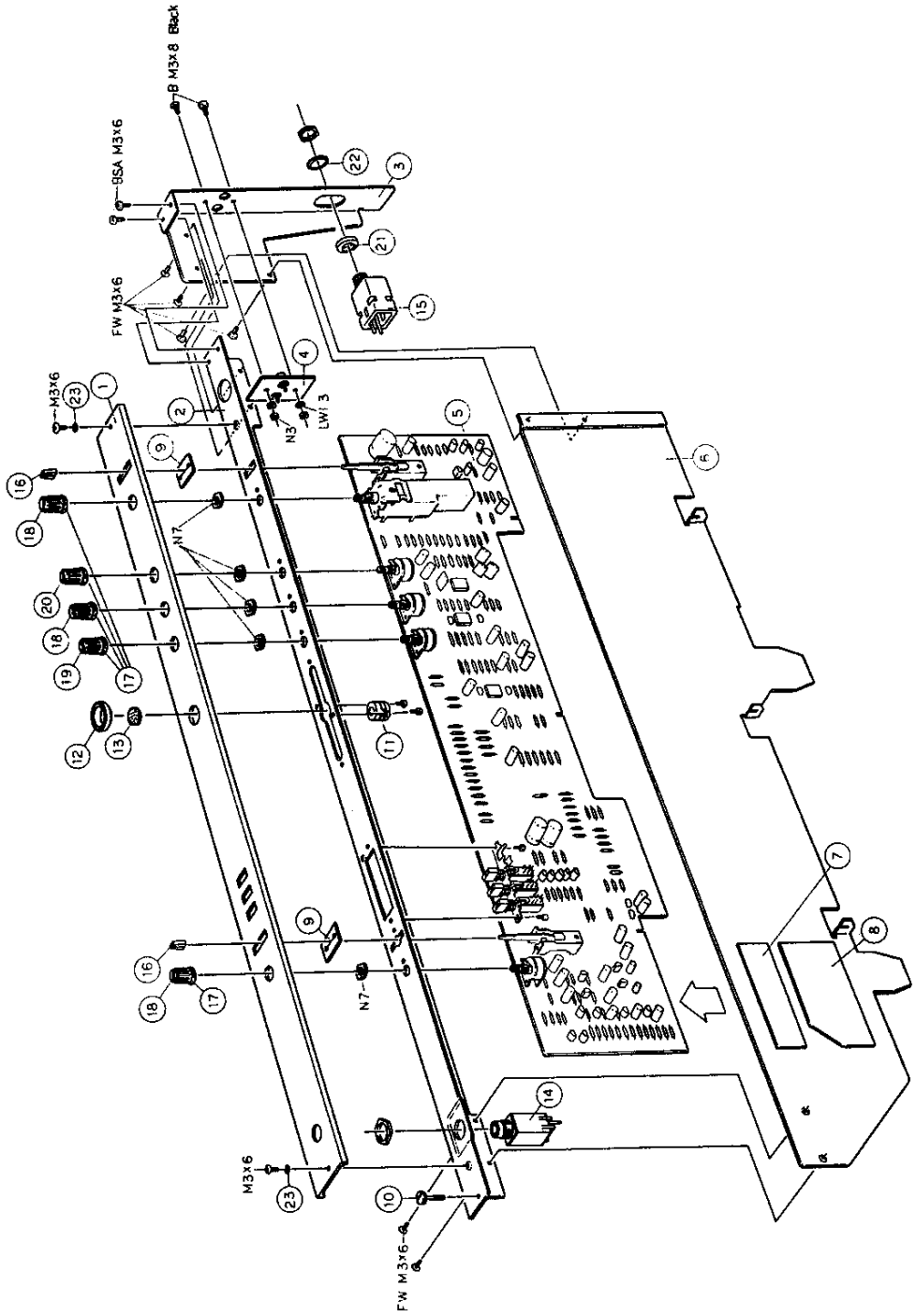

EXPLODED VIEW
Talkback module (M-304)
REV. _____

PARTS LIST

Title	Talkback Module	Assembly No. 60854020
Ref. No.	Description	Parts No.
1	Panel, dress, talkback module	60362431
2	Chassis assembly	60374601
3	Panel, connector, talkback module	60374680
4	Board, RCA jack	60523040
5	Talkback amplifier PCB assembly	60854120
6	Plate, shield	60374710
7	Insulator A, sheet	60530290
8	" B, "	60530300
9	Dust screen, switch B	60060630
10	Captive screw	60030730
11	Mic, electret condenser, EM10PB	60550170
12	Cap, microphone	60374730
13	Screen, microphone	60375420
14	Jack, phone, 3-conductor type, JL3NI	51240260
15	" , " , 2-conductor type, S-G-7625	50432970
16	Knob, lever switch	60060501
17	Knob, B-15S-2	60060531
18	Cap, knob, B-15S-2, 505 (ivory)	60060541
19	" , " , " , 236 (red)	60060561
20	" , " , " , 203 (orange)	60060551
21	Spacer, jack	60030260
22	Washer for jack	60030250
23	Washer, W3¢	60030680

PARTS LIST
Talkback Module
(Model 304)
REV._____

Model 305A Control Room Monitor Module

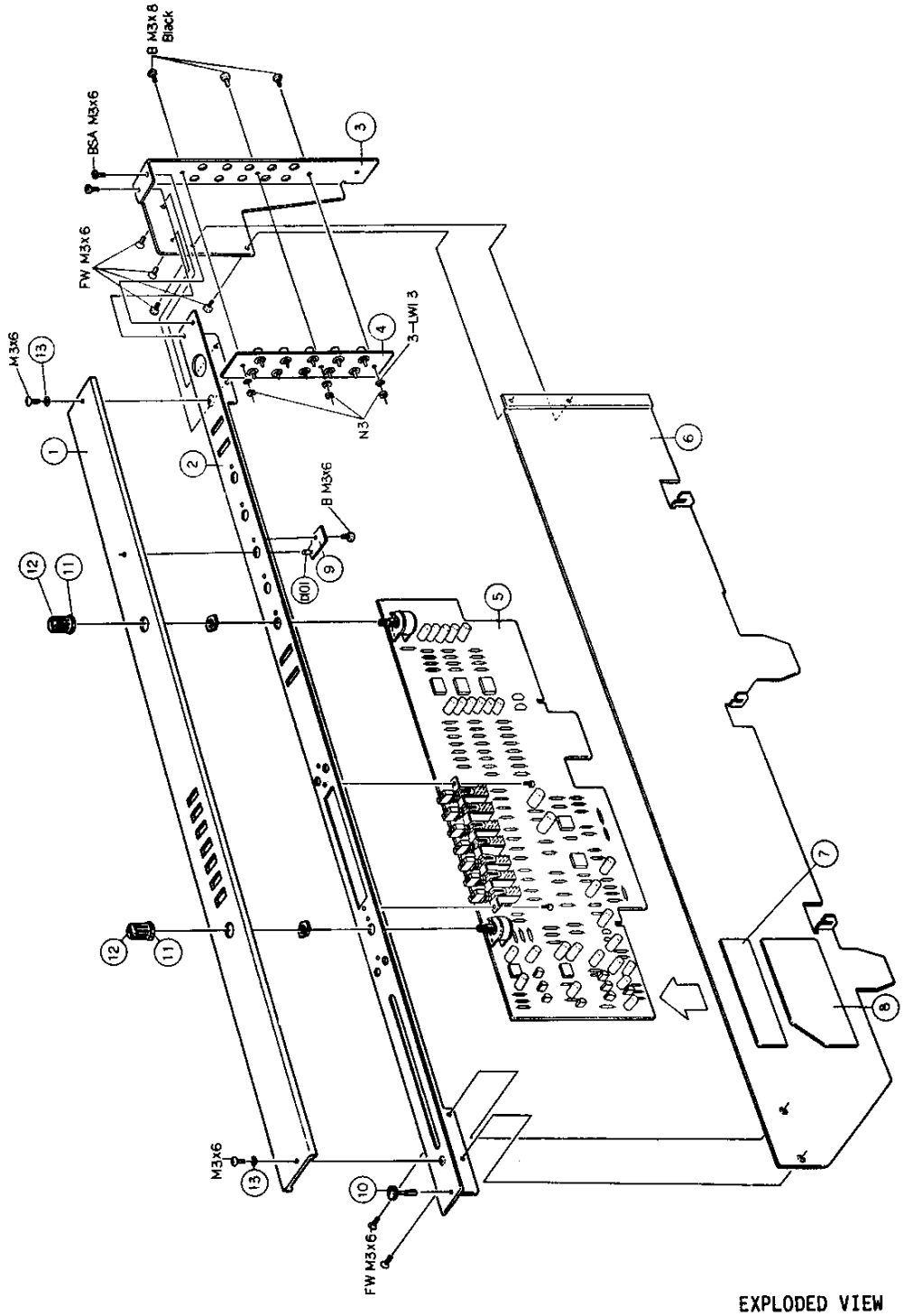

EXPLODED VIEW
Control room monitor
module (M-305A)
REV. ____

Title	Control Room Monitor Module	Assembly No. 60854000
Ref. No.	Description	Parts No.
D101	LED, SLP-114B (red)	60483340
1	Panel, dress, control room monitor	60362411
2	Chassis assembly	60374551
3	Panel, connector, CR monitor	60374670
4	Board, RCA jack	60523070
5	Control room amplifier PCB assembly	60854100
6	Plate, shield	60374710
7	Insulator A, sheet	60530390
8	" B, "	60530300
9	PCB,LED	60504671
10	Captive screw	60030730
11	Knob, B-15S-2	60060531
12	Cap, knob, B-15S-2, 505 (ivory)	60060541
13	Washer, W3¢	60030680

PARTS LIST
Control Room Monitor Module
(Model 305A)
REV._____

Model 305B Studio Monitor Module

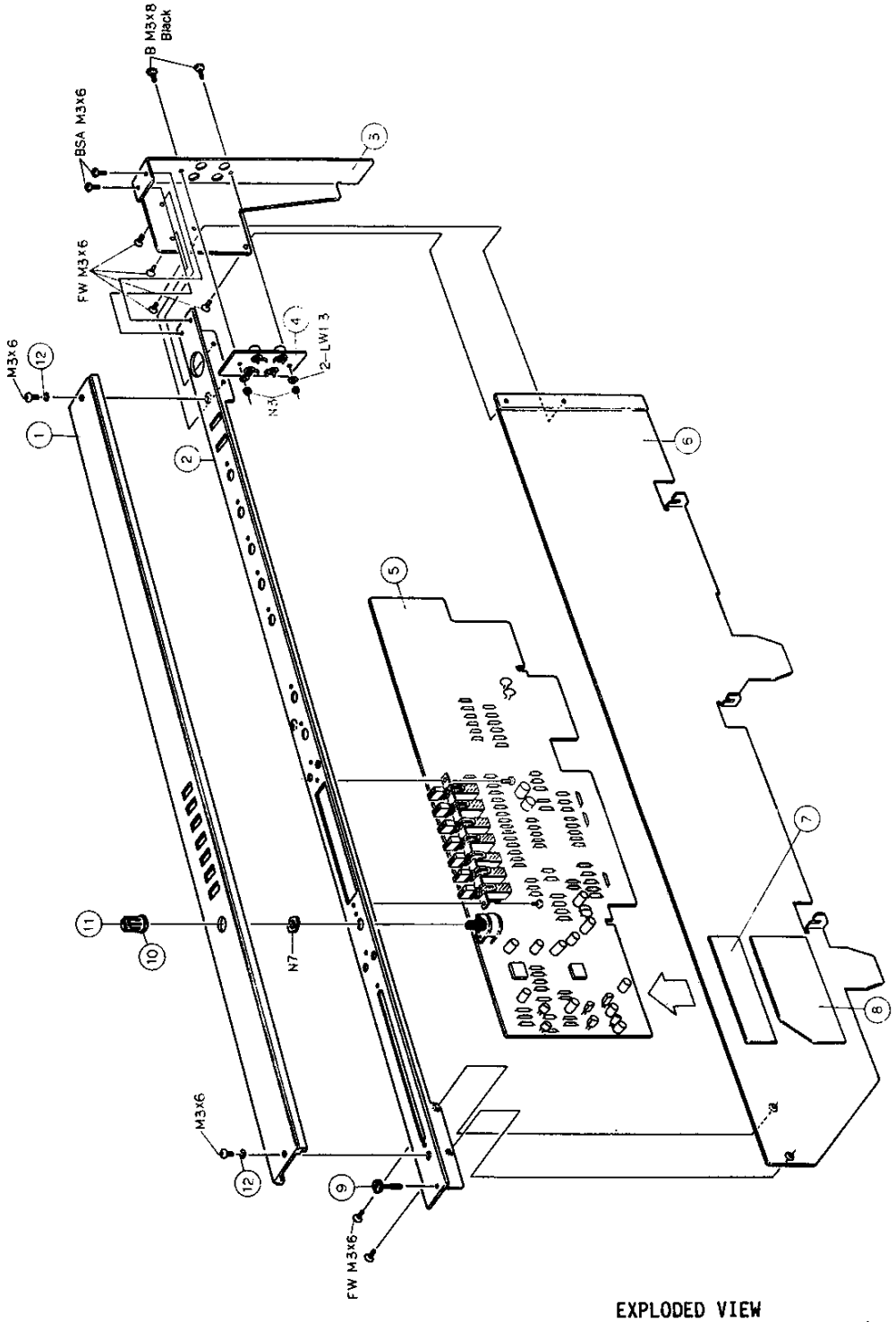

EXPLODED VIEW
Studio monitor module (M-305B)
REV. _____

PARTS LIST

Title	Studio Monitor Module	Assembly No. 60854010
Ref. No.	Description	Parts No.
1	Panel, dress, studio monitor	60362421
2	Chassis assembly	60374551
3	Panel, connector, studio monitor	60374660
4	Board, RCA jack	60523050
5	Studio monitor amplifier PCB assembly	60854110
6	Plate, shield	60374710
7	Insulator A, sheet	60530290
8	" B, "	60530300
9	Captive screw	60030730
10	Knob, B-15S-2	60060531
11	Cap, knob, B-15S-2, 505 (ivory)	60060541
12	Washer, W3¢	60030680

PARTS LIST
Studio Monitor Module
(Model 305B)
REV._____

Model 306 Power Supply Module

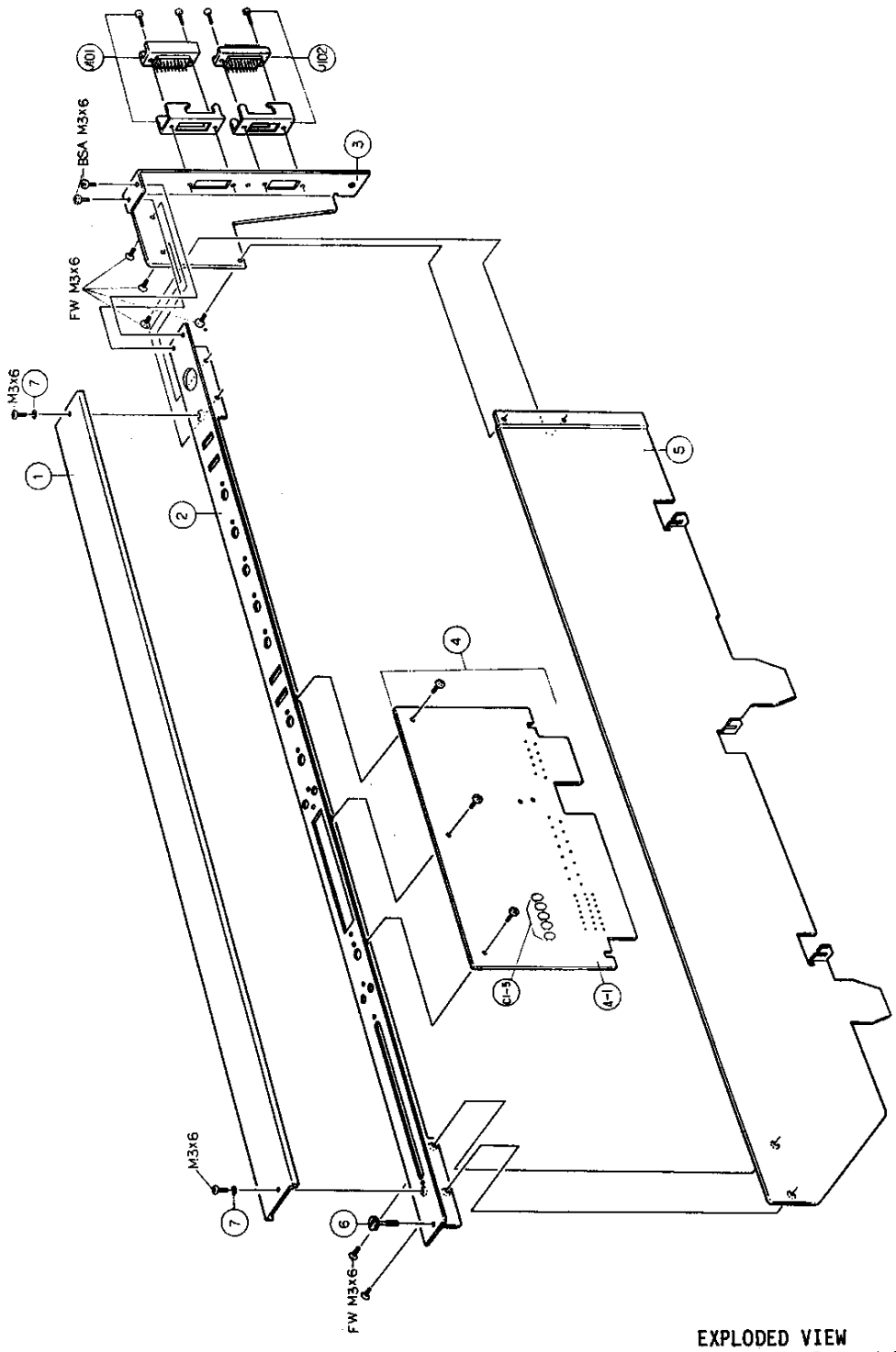

EXPLODED VIEW
Power supply module (M-306)
REV. _____

PARTS LIST

Title	Power Supply Module	Assembly No. 60854040
Ref. No.	Description	Parts No.
J101	Connector, multi, 20PCN, P-1620BA-STA (male)	60363441
J102	" , " , 24PCN, S-1624A-STA (female)	60523190
C1-5	Capacitor, ceramic, ECK-D-05-103Z, 0.01/50V	60440050
1	Panel, dress	60363441
2	Chassis assembly	60374750
3	Panel, connector, power supply module	60374691
4	PCB assembly	60854200
5	Plate, shield	60374710
6	Captive screw	60030370
7	Washer, W3¢	60030680

PARTS LIST
Power Supply Module
(Model 306)
REV._____

Model 307 Filler Module

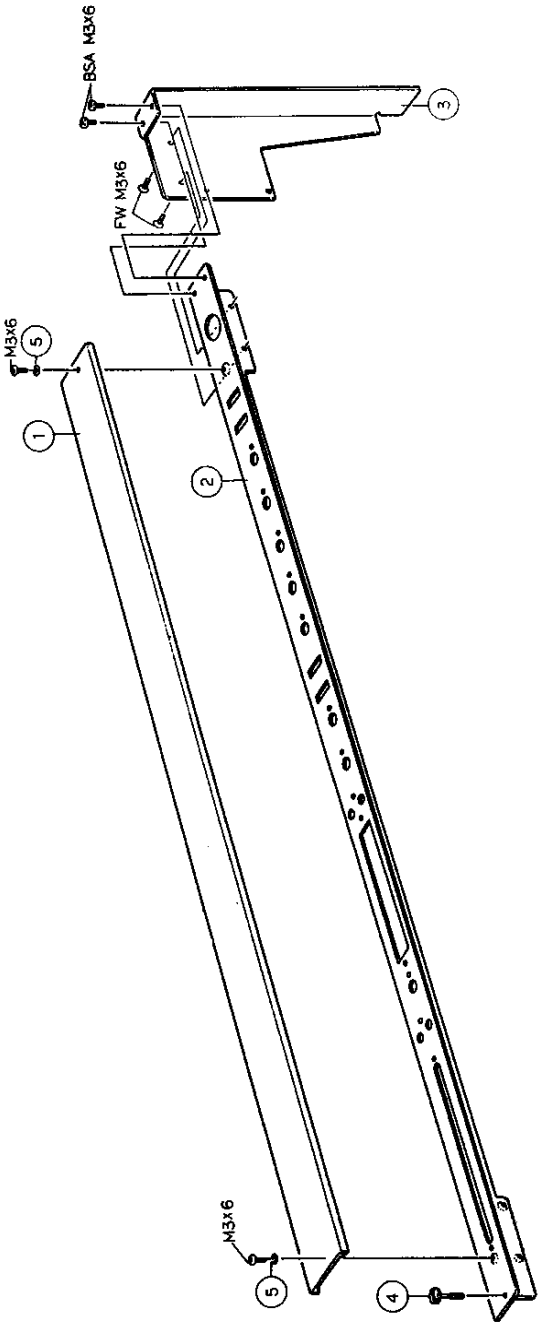

EXPLODED VIEW
Filler module (M-307)
REV. ____

PARTS LIST

Title	Filler Module	Assembly No. 60854030
Ref. No.	Description	Parts No.
1	Dress panel	60362441
2	Chassis	60374561
3	Rear panel	60374700
4	Captive screw	60030730
5	Washer, W3¢	60030680

PARTS LIST
Filler Module
(Model 307)
REV._____

PARTS LIST

Title	Input Amplifier PCB Assembly	Assembly No. 6085 4060
Ref. No.	Description	Parts No.
1	PCB, input amplifier	6050 4653
2	PCB, switch	6050 4660
U1-5	Integrated circuit,	6048 6070
Q1	Transistor, 2SA725-F	6048 0520
Q2,3	FET, 2SK68-A	6048 0930
Q4	Transistor, 2SA725-F	6048 0520
Q5	" , 2SC1312Y-G	6048 0450
Q6	" , 2SA725-F	6048 0520
Q7	" , 2SC1312Y-G	6048 0450
Q8	" , 2SA725-F	6048 0520
D1-8	Diode, 1S953	5042 2720
S1	Switch, lever, SCR522	6051 8080
S2-4	" , " , SCR523	6051 8090
S5	" , push	6051 4330
R101	Potentiometer, trimmer, SR19R, 10Kohm, taper B	5053 3480
R201	" , rotary, single, 10Kohm, taper C	6042 1230
R202,3	" , " , " , 20Kohm, taper J	6042 1221
R204-7	" , " , " , 10Kohm, taper G	6042 1210
R208	" , " , dual , 5Kohm, taper A, C	6042 1200
T1	Transformer, MIC	6046 5162
	Binder, SK, SKB-2M	6049 9080
R1	Resistor, carbon,FCR25, 47Kohm	
R2	" , " , " , 100 ohm	
R3	" , " , " , 1Kohm	
R4	" , " , " , 1Kohm	
R5	" , " , " , 240 ohm	
R6	" , " , " , 12Kohm	
R7	" , " , " , 4.7Kohm	
R8	" , " , " , 4.7Kohm	
R9	" , " , " , 100Kohm	
R10	" , " , " , 470 ohm	
R11	" , " , " , 470 ohm	
R12	" , " , " , 100 ohm	
R13	" , " , " , 15Kohm	

PARTS LIST
Input Amplifier PCB Assembly
(Model 301)
REV._____

PARTS LIST

Title	Power Supply Unit (Model PS-15)	Assembly No. 6085 4050
Ref. No.	Description	Parts No.
T101	Transformer, power, DM	6046 0900
T101	" , " , UL	6046 0870
T101	" , " , CEE	6046 0880
T101	" , " , EX	6046 0890
Z101	Spark Killer, 0.033+120 ohm	5052 9060
Z102	" " , "	5052 9060
Z101	Spark Killer, 0.033+120 ohm	5052 9110
Z102	" " , "	5052 9110
Z101	Spark Killer, 0.033+120 ohm	5052 9080
Z102	" " , "	5052 9080
Q4,5,6	Transistor, 2SD 111	6048 0700
U4	Integrated circuit, FS7815M	6048 6150
S101	Switch, power, SDE45	6051 8070
PL1	LED, ST-5052	6048 3300
D1,2,3	Diode, S4VB20	6048 3550
J101	Outlet, AC, 2P, DM	5043 2950
J101	Connector, power receptacle (UL,CSA, CEE, BS, SAA)	6052 2150
J102	" , cannon, XLR 2-32	6052 3120
J103	" , 20P, S-1620A-STA (female)	6052 1315
1	Cover, top	6037 4811
2	Spacer	6003 0700
3	Heat sink	6037 4841
4	Protecting cover, transistor	6053 0150
5	Blinding board	6037 4830
6	Power supply PCB assembly	6085 4130
7	Panel, side (right)	6037 4800-01
8	Panel, side (left)	6037 4800-02
9	Side plate, chassis (right)	6037 4790-01
10	Side plate, chassis (left)	6037 4790-02
11	Shaft	6003 0710
12	Cover, bottom	6037 4821
13	Bumper, rubber, ¢15	6038 6810
14	Panel, connector	6037 4851
15	Panel, dress	6036 2461

PARTS LIST
Power Supply Unit
(Model PS-15)
REV._____

Title	Power Supply Unit (Model 15 PS-15)	Parts No.
16	Cable, w/connector, power	6049 3110
17	Handle	6006 0600
18	Washer, panel handle	6003 0720
19	Terminal, ground	5045 4071
20	Chassis, main	6037 4773
21	Bracket, bottom cover support	6037 5560
22	Bracket, top cover support	6037 5550
23	Panel, transformer	6037 4780

PARTS LIST
Power Supply Unit
(Model PS-15)
REV._____

Ref. No.	Description	Parts No.
R14	Resistor, carbon, FCR¼, 1.5Kohm	
R15	" , " , " , 1Mohm	
R16	" , " , " , 12Kohm	
R17	" , " , " , 75ohm	
R18	" , " , " , 39ohm	
R19	" , " , " , 22Kohm	
R20	" , " , " , 10 ohm	
R21	" , " , " , 10 ohm	
R22	" , " , " , 100 ohm	
R23	" , " , " , 100Kohm	
R24	" , " , " , 4.7Kohm	
R25	" , " , " , 470Kohm	
R26	" , " , " , 560 ohm	
R27	" , " , " , 15Kohm	
R28	" , " , " , 9.1Kohm	
R29	" , " , " , 10Kohm	
R30	" , " , " , 1.8Kohm	
R31	" , " , " , 4.7Kohm	
R32	" , " , " , 33Kohm	
R33	" , " , " , 2.2Kohm	
R34	" , " , " , 1Kohm	
R35	" , " , " , 470Kohm	
R36	" , " , " , 220Kohm	
R37	" , " , " , 10Kohm	
R38	" , " , " , 680 ohm	
R39	" , " , " , 1Kohm	
R40	" , " , " , 100Kohm	
R41	" , " , " , 100Kohm	
R42	" , " , " , 2.7Kohm	
R43	" , " , " , 2.7Kohm	
R44	" , " , " , 100Kohm	
R45	" , " , " , 6.8Kohm	
R46	" , " , " , 15Kohm	
R47	" , " , " , 100 ohm	
R48-54	" , " , " , 22Kohm	
R55	" , " , " , 470 ohm	

PARTS LIST
Input Amplifier PCB Assembly
(Model 301)
REV._____

Ref. No.	Description	Parts No.
R56	Resistor, carbon, FCR $\frac{1}{4}$, 120Kohm	
R57	" , " , " , 470 ohm	
R58	" , " , " , 120Kohm	
R59	" , " , " , 470 ohm	
R60	" , " , " , 120Kohm	
R61	" , " , " , 470 ohm	
R62	" , " , " , 120Kohm	
R63	" , " , " , 470 ohm	
R64	" , " , " , 120Kohm	
R65	" , " , " , 470 ohm	
R66	" , " , " , 330 ohm	
R67	" , " , " , 680 ohm	
R68	" , " , " , 330 ohm	
C1	Capacitor, electrolytic, 25VB4.7, 4.7/25V	5055 4530
C2	" , mylar, CQ92MC1H102K, 0.001/50V	6044 5160
C3	" , dipped mica, 15P/50V	6044 0170
C4	" , " " , "	6044 0170
C5	" , electrolytic, 16VB10, 10/16V	5055 4050
C6	" , polystyrene, CQ09SC1H331K, 330P	5054 3340
C7	" , electrolytic, 16VB10, 10/16V	5055 4050
C8	" , ceramic, ECK-D-05-103Z, 0.01/50V	6044 0050
C9,10	" , electrolytic, 16VB220, 220/16V	5055 4390
C11	" , " , 10VB47, 47/10V	6043 0180
C12	" , " , 2.5VB4.7, 4.7/25V	5055 4530
C13	" , " , 50VB1, 1/50V	5055 4540
C14	" , " , 25VB4.7, 4.7/25V	5055 4530
C15	" , " , 16VB10, 10/16V	5055 4050
C16	" , " , 10VB47, 47/10V	6043 0180
C17	" , mylar, CQ92MC1H223K, 0.022/50V	6044 5390
C18	" , dipped tantalum, SSG35-R68, 0.68/35V	6043 1980
C19	" , " " , SSG35-R15, 0.15/35V	6043 2010
C20	" , mylar, CQ92MC1H103K, 0.01/50V	6044 5370

PARTS LIST
Input Amplifier PCB Assembly
(Model 301)
REV._____

Ref. No.	Description	Parts No.
C21	Capacitor, mylar, CQMC1H332K, 0.0033/50V	6044 5190
C22	" , dipped tantalum, SSG35-R15, 0.15/35V	6043 2010
C23	" , mylar, CQ92MC1H563K, 0.056/50V	6044 7370
C24	" , " , CQ92MC1H332K, 0.0033/50V	6044 5190
C25	" , " , CQ92MC1H473K, 0.047/50V	6044 5410
C26	" , " , CQ92MC1H472K, 0.0047/50V	6044 5200
C27	" , " , CQ92MC1H102K, 0.001/50V	6044 5160
C29	" , " , CQ92MC1H273K, 0.027/50V	6044 7350
C30	" , " , CQ92MC1H332K, 0.0033/50V	6044 5190
C31	" , polystyrene, CQ09SC1H101K, 100P/50V	5054 3400
C32	" , polystyrene, CQ09SC1H471K, 470P/50V	5054 3130
C33	" , mylar, CQ92MC1H223, 0.022/50V	6044 5390
C34,35	" , electrolytic, 25VB/10, 10/25V	5055 4040
C36-38	" , ceramic, ECK-D-05-103Z, 0.01/50V	6044 0050

PARTS LIST
Input Amplifier PCB Assembly
(Model 301)
REV._____

PARTS LIST

Title	Buss Master Amplifier PCB Assembly	Assembly No. 6085 4070
Ref. No.	Description	Parts No.
1	PCB, buss master amplifier	6050 4682
U1-6	Integrated circuit, 4558DF	6048 6070
S1,2	Switch, lever, SLR523	6051 8090
S3	Switch, push	6051 4340
R101	Potentiometer, trimmer, single, 20Kohm, taper S	6042 1221
R102	" , " , dual , 5Kohm, taper A,C	6042 1200
R103	" , " , LEV-4R, 10Kohm, taper C	6041 2120
R104	" , " , single, 20Kohm, taper S	6042 1221
R105	" , " , dual, 5Kohm, taper A,C	6042 1200
R106	" , " , LEV-4R, 10Kohm, taper C	6041 2120
R107	" , " , single, 20Kohm, taper A	6042 1240
R208	" , rotary , single, 20Kohm, taper A	6042 1240
R1	Resistor, carbon, FCR25, 22Kohm	
R2	" , " , " , 2Kohm	
R3	" , " , " , 22Kohm	
R4	" , " , " , 22Kohm	
R5	" , " , " , 100 ohm	
R6	" , " , " , 47Kohm	
R7	" , " , " , 1Kohm	
R8	" , " , " , 100Kohm	
R9	" , " , " , 100Kohm	
R10	" , " , " , 6.8Kohm	
R11	" , " , " , 15Kohm	
R12	" , " , " , 100 ohm	
R13	" , " , " , 100Kohm	
R14	" , " , " , 220Kohm	
R15	" , " , " , 22Kohm	
R16	" , " , " , 100Kohm	
R17	" , " , " , 220Kohm	
R18	" , " , " , 22Kohm	
R19	" , " , " , 47Kohm	
R20	" , " , " , 100Kohm	

PARTS LIST
Buss Master Amplifier PCB Assembly
(Model 302)
REV._____

Ref. No.	Description	Parts No.
R21	Resistor, carbon, FCR25, 47Kohm	
R22	" , " , " , 100Kohm	
R23	" , " , " , 47Kohm	
R24	" , " , " , 47Kohm	
R25	" , " , " , 1Kohm	
R26	" , " , " , 100Kohm	
R27	" , " , " , 100Kohm	
R28	" , " , " , 10Kohm	
R29	" , " , " , 15Kohm	
R30	" , " , " , 47Kohm	
R31	" , " , " , 22Kohm	
R32	" , " , " , 47Kohm	
R33	" , " , " , 47Kohm	
R34	" , " , " , 22Kohm	
R35	" , " , " , 47Kohm	
R36	" , " , " , 100Kohm	
R37	" , " , " , 6.8Kohm	
R38	" , " , " , 15Kohm	
R39	" , " , " , 22Kohm	
R40	" , " , " , 22Kohm	
R41	" , " , " , 47Kohm	
R42	" , " , " , 100Kohm	
R43	" , " , " , 6.8Kohm	
R44	" , " , " , 15Kohm	
R45	" , " , " , 22Kohm	
R46	" , " , " , 22Kohm	
R47	" , " , " , 47Kohm	
R48	" , " , " , 47Kohm	
R49	" , " , " , 22Kohm	
C1	Capacitor, electrolytic, 16VB10, 10/16V	5055 4050
C2	" , " , 50VB1, 1/50V	5055 4540
C3	" , " , 16VB10, 10/16V	5055 4050
C4	" , " , 25VB4.7, 4.7/25V	5055 4530
C5	" , " , 25VB4.7, 4.7/25V	5055 4530

PARTS LIST
Buss Master Amplifier PCB Assembly
(Model 302)
REV_____

Ref. No.	Description	Parts No.
C6	Capacitor, electrolytic, 16VB10, 10/16V	5055 4050
C7	" , " , 16VB10, 10/16V	5055 4050
C8	" , " , 25VB4.7, 4.7/25V	5055 4530
C9	" , " , 25VB4.7, 4.7/25V	5055 4530
C10	" , " , 25VB4.7, 4.7/25V	5055 4530
C11	" , " , 16VB10, 10/16V	5055 4050
C12	" , " , 25VB4.7, 4.7/25V	5055 4530
C13	" , " , 16VB10, 10/16V	5055 4050
C14	" , " , 25VB4.7, 4.7/25V	5055 4530
C15	" , " , 16VB10, 10/16V	5055 4050
C16	" , " , 25VB10, 10/25V	5055 4040
C17	" , " , 25VB10, 10/25V	5055 4040
C18-21	" , ceramic, ECK-D-05-103Z, 0.01/50V	6044 0050
C22	" , electrolytic, 16VB10, 10/16V	5055 4050
C23	" , " , 16VB10, 10/16V	5055 4050

PARTS LIST
Buss Master Amplifier PCB Assembly
(Model 302)
REV._____

PARTS LIST

Title	Aux A Amplifier PCB Assembly	Assembly No. 6085 4080
Ref. No.	Description	Parts No.
1	PCB, Aux A Amplifier	6050 4692
U1-11	Integrated circuit	6048 6070
S1	Switch, slide, SSA042	6051 6160
S3	Switch, push	6051 4350
D1-15	Diode, 1S953	5042 2720
R101	Potentiometer, rotary , dual, 20Kohm, taper A,C	6042 1180
R102	" , " , LEV-4R, 10Kohm, taper C	6041 2120
R103	" , " , single, 10Kohm, taper A	6042 1170
R201	" , trimmer, 10ϕ, SR19R, 4.7Kohm, taper B	5053 3460
R202	" , " , 10ϕ, SR19R, 2.2Kohm "	5053 3640
R203	" , " , 10ϕ, SR19R, 4.7Kohm "	5053 3460
R204	" , " , 10ϕ, SR19R, 2.2Kohm "	5053 3640
R205	" , " , 10ϕ, SR19R, 4.7Kohm "	5053 3460
R206	" , " , 10ϕ, SR19R, 2.2Kohm "	5053 3640
R207	" , " , 10ϕ, SR19R, 4.7Kohm "	5053 3460
R208	" , " , 10ϕ, SR19R, 2.2Kohm "	5053 3640
R209	" , " , 10ϕ, SR19R, 4.7Kohm "	5053 3460
R210	" , " , 10ϕ, SR10R, 2.2Kohm "	5053 3640
Q1-5	Transistor, 2SA697D	6048 0360
R1	Resistor, carbon, FCR25, 100Kohm	
R2	" , " , " , 1Kohm	
R3	(deleted)	
R4	" , " , " , 15Kohm	
R5	" , " , " , 10Kohm	
R6	" , " , " , 330 ohm	
R7	" , " , " , 47Kohm	
R8	" , " , " , 100Kohm	
R9	" , " , " , 1Kohm	
R10	(deleted)	
R11	" , " , " , 15Kohm	
R12	" , " , " , 10Kohm	
R13	" , " , " , 330 ohm	
R14	" , " , " , 47Kohm	
R15	" , " , " , 100Kohm	
R16	" , " , " , 1Kohm	

PARTS LIST
Aux A Amplifier PCB Assembly
(Model 303A)
REV._____

Ref. No.	Description	Parts No.
R17		
R18	Resistor, carbon, FCR25, 15Kohm	
R19	" , " , " , 10Kohm	
R20	" , " , " , 330 ohm	
R21	" , " , " , 47Kohm	
R22	" , " , " , 100Kohm	
R23	" , " , " , 1Kohm	
R24	(deleted)	
R25	" , " , " , 15Kohm	
R26	" , " , " , 10Kohm	
R27	" , " , " , 330 ohm	
R28	" , " , " , 47Kohm	
R29	" , " , " , 1Kohm	
R30	" , " , " , 5.1Kohm	
R31	" , " , " , 18Kohm	
R32	" , " , " , 33Kohm	
R33	" , " , " , 8.2Kohm	
R34	" , " , " , 220Kohm	
R35	" , " , " , 33Kohm	
R36	" , " , " , 1Kohm	
R37	" , " , " , 470Kohm	
R38	" , " , " , 10Kohm	
R39	" , " , " , 680 ohm	
R40	" , " , " , 3.3Kohm	
R41	" , " , " , 1Kohm	
R42	" , " , " , 5.1Kohm	
R43	" , " , " , 18Kohm	
R44	" , " , " , 33Kohm	
R45	" , " , " , 8.2Kohm	
R46	" , " , " , 220Kohm	
R47	" , " , " , 33Kohm	
R48	" , " , " , 1Kohm	
R49	" , " , " , 470Kohm	
R50	" , " , " , 10Kohm	
R51	" , " , " , 680 ohm	
R52	" , " , " , 3.3Kohm	

PARTS LIST
Aux A Amplifier PCB Assembly
(Model 303A)
REV._____

Ref. No.	Description	Parts No.
R53	Resistor, carbon, FCR25, 1Kohm	
R54	" , " , " , 5.1Kohm	
R55	" , " , " , 18Kohm	
R56	" , " , " , 33Kohm	
R57	" , " , " , 8.2Kohm	
R58	" , " , " , 220Kohm	
R59	" , " , " , 33Kohm	
R60	" , " , " , 1Kohm	
R61	" , " , " , 470Kohm	
R62	" , " , " , 10Kohm	
R63	" , " , " , 680 ohm	
R64	" , " , " , 33Kohm	
R65	" , " , " , 1Kohm	
R66	" , " , " , 5.1Kohm	
R67	" , " , " , 18Kohm	
R68	" , " , " , 33Kohm	
R69	" , " , " , 8.2Kohm	
R70	" , " , " , 220Kohm	
R71	" , " , " , 33Kohm	
R72	" , " , " , 1Kohm	
R73	" , " , " , 470Kohm	
R74	" , " , " , 10Kohm	
R75	" , " , " , 680 ohm	
R76	" , " , " , 3.3Kohm	
R77	(deleted)	
R78	"	
R79	"	
R80	"	
R81	"	
R82	Resistor, carbon, FCR25, 22Kohm	
R83	" , " , " , 10Kohm	
R84	" , " , " , 10Kohm	
R85	" , " , " , 22Kohm	
R86	" , " , " , 47Kohm	
R87	" , " , " , 10Kohm	
R88	" , " , " , 10Kohm	
R89	" , " , " , 47Kohm	
R90	" , " , " , 47Kohm	

PARTS LIST
Aux A Amplifier PCB Assembly
(Model 303A)
REV._____

Ref. No.	Description	Parts No.
R91	Resistor, carbon, FCR25, 470Kohm	
R92	" , " , " , 100 ohm	
R93	" , " , " , 47Kohm	
R94	" , " , " , 120Kohm	
R95	" , " , " , 1Kohm	
R96	" , " , " , 100Kohm	
R97	" , " , " , 6.8Kohm	
R98	" , " , " , 15Kohm	
R99	" , " , " , 22Kohm	
R100	" , " , " , 8.2Kohm	
R101	" , " , " , 33Kohm	
R102	" , " , " , 47Kohm	
R103	" , " , " , 100 ohm	
R104	" , " , " , 8.2Kohm	
R105	" , " , " , 6.8Kohm	
R106	" , " , " , 3.3Kohm	
R107	" , " , " , 22Kohm	
R108	" , " , " , 22Kohm	
R109	" , " , " , 47Kohm	
R110	" , " , " , 33Kohm	
R111	" , " , " , 8.2Kohm	
R112	" , " , " , 220Kohm	
R113	" , " , " , 470Kohm	
R114	" , " , " , 1Kohm	
R115	" , " , " , 33Kohm	
R116	" , " , " , 10Kohm	
R117	" , " , " , 680 ohm	
R118	" , " , " , 10Kohm	
R119	" , " , " , 10Kohm	
C1-4	Capacitor, electrolytic, 10VB22, 22/10V	6043 0160
C5	" , " , 25VB4.7, 4.7/25V	5055 4530
C6	" , " , 50VB1, 1/50V	5055 4540
C7	" , " , 25VB4.7, 4.7/25V	5055 4530
C8	" , " , 25VB4.7, 4.7/25V	5055 4530
C9	" , " , 50VB1, 1/50V	5055 4540
C10	" , " , 25VB4.7, 4.7/25V	5055 4530

PARTS LIST
Aux A Amplifier PCB Assembly
(Model 303A)
REV._____

Ref. No.	Description	Parts No.
C11	Capacitor, electrolytic, 25VB4.7, 4.7/25V	5055 4530
C12	" , " , 50VB1, 1/50V	5055 4540
C13	" , " , 25VB4.7, 4.7/25V	5055 4530
C14	" , " , 25VB4.7, 4.7/25V	5055 4530
C15	" , " , 50VB1, 1/50V	5055 4540
C16	" , " , 25VB4.7, 4.7/25V	5055 4530
C17	(deleted)	
C18-20	" , " , 16VB10, 10/16V	5055 4050
C21	" , " , 25VB4.7, 4.7/25V	5055 4530
C22	" , " , 16VB10, 10/16V	5055 4050
C23	" , " , 16VB10, 10/16V	5055 4050
C24-27	" , ceramic, ECK-D-05-103Z, 0.01/50V	6044 0050
C28	" , electrolytic, 25VB10, 10/25V	5055 4040
C29	" , " , 25VB10, 10/25V	5055 4040
C30	" , " , 16VB10, 10/16V	5055 4050
C31	" , " , 25VB4.7, 4.7/25V	5055 4530
C32	" , " , 25VB4.7, 4.7/25V	5055 4530
C33	" , " , 50VB1, 1/50V	5055 4540

PARTS LIST
Aux A Amplifier PCB Assembly
(Model 303A)
REV._____

Ref. No.	Description	Parts No.
R11	Resistor, carbon, FCR25, 1ohm	
R12	" , " , " , 1ohm	
R13	" , " , " , 1Kohm	
R14	" , " , " , 390Kohm	
R15	" , " , " , 39Kohm	
R16	" , " , " , 15Kohm	
R17	" , " , " , 3.9Kohm	
R18	" , " , " , 1.5Kohm	
R19-1	" , " , " , 910 ohm	
R19-2	" , " , " , 150 ohm	
R20	" , " , " , 390Kohm	
R21	" , " , " , 39Kohm	
R22	" , " , " , 15Kohm	
R23	" , " , " , 3.9Kohm	
R24	" , " , " , 1.5Kohm	
R25-1	" , " , " , 910 ohm	
R25-2	" , " , " , 150 ohm	
R26	" , " , " , 390Kohm	
R27	" , " , " , 39Kohm	
R28	" , " , " , 15Kohm	
R29	" , " , " , 3.9Kohm	
R30	" , " , " , 1.5Kohm	
R31-1	" , " , " , 910 ohm	
R31-2	" , " , " , 150 ohm	
R32	" , " , " , 2.7Kohm	
R33	" , " , " , 1Kohm	
R34	" , " , " , 1Kohm	
R35	" , " , " , 2.7Kohm	
R36	" , " , " , 390 ohm	
R37	" , " , " , 10Kohm	
R38	" , " , " , 6.8Kohm	
R39	" , " , " , 150Kohm	
R40	" , " , " , 1Kohm	
R41	" , " , " , 100Kohm	
R42	(deleted)	
R43	" , " , " , 39Kohm	
R44	" , " , " , 47Kohm	

PARTS LIST
Talkback Amplifier PCB Assembly
(Model 304)
REV._____

Ref. No.	Description	Parts No.
R45	Resistor, carbon, FCR25, 1Kohm	
R46	" , " , " , 100Kohm	
R47	" , " , " , 5.6Kohm	
R48	" , " , " , 39Kohm	
R49	" , " , " , 47Kohm	
R50	" , " , " , 1Kohm	
R51	" , " , " , 100Kohm	
R52	" , " , " , 5.6Kohm	
R53	" , " , " , 39Kohm	
R54	" , " , " , 47Kohm	
R55	" , " , " , 47Kohm	
R56	" , " , " , 1Kohm	
R57	" , " , " , 100Kohm	
R58	" , " , " , 100Kohm	
R59	" , " , " , 150Kohm	
R60	" , " , " , 56Kohm	
R61	" , " , " , 18Kohm	
R62	" , " , " , 220 ohm	
R63	" , " , " , 2.2Kohm	
R64	" , " , " , 100 ohm	
R65	" , " , " , 220 ohm	
R66	" , " , " , 390 ohm	
R67	" , " , " , 1.5Kohm	
R68	" , " , " , 1.8ohm	
R69	" , " , " , 1.8ohm	
R70	" , " , " , 1Kohm	
R71	" , " , " , 100Kohm	
R72	" , " , " , 18Kohm	
R73	" , " , " , 220 ohm	
R74	" , " , " , 2.2Kohm	
R75	" , " , " , 100 ohm	
R76	" , " , " , 220 ohm	
R77	" , " , " , 390 ohm	
R78	" , " , " , 1.5Kohm	
R79	" , " , " , 1.8ohm	
R80	" , " , " , 1.8ohm	

PARTS LIST
Talkback Amplifier PCB Assembly
(Model 304)
REV._____

Ref. No.	Description	Parts No.
R81	Resistor, carbon, FCR25, 1Kohm	
R82	" , " , " , 1Kohm	
R83	" , " , " , 1Kohm	
R84	" , " , " , 4.7Kohm	
R85	" , " , " , 39Kohm	
R86	" , " , " , 6.8Kohm	
R87	" , " , " , 47Kohm	
R88	" , " , " , 15Kohm	
R89	" , " , " , 33Kohm	
R90	" , " , " , 100Kohm	
R91	" , " , " , 15Kohm	
R92	" , " , " , 33Kohm	
R93	" , " , " , 100Kohm	
R94-97	" , " , " , 100 ohm	
R98	" , " , " , 1Kohm	
R99	" , " , " , 1Kohm	
C1	Capacitor, electrolytic, 25VB4.7, 4.7/25V	5055 4530
C2	" , " , 10VB47, 47/10V	6043 0180
C3	" , " , 16VB47, 47/16V	6043 1890
C4	" , " , 10VB47, 47/10V	6043 0180
C5	" , polystyrene , CQ09SCIH221K, 220P/50V	5054 3420
C6	" , electrolytic, 16VB470, 470/16V	5055 4400
C7-9	" , mylar, CQ92MCIH103K, 0.01/50V	6044 5370
C10	" , electrolytic, 10VB22, 22/10V	6043 0160
C11-13	" , " , 25VB4.7, 4.7/25V	5055 4530
C14	" , " , 50VB1, 1/50V	5055 4540
C15	" , " , 25VB4.7, 4.7/25V	5055 4530
C16	" , " , 25VB4.7, 4.7/25V	5055 4530
C17-19	" , " , 10VB47, 47/10V	6043 0180
C20	" , polystyrene , CQ09SCIH681K, 680P/50V	5054 3430
C21	" , electrolytic, 6.3VB470, 470/6.3V	5055 4600
C22	" , " , 25VB4.7, 4.7/25V	5055 4530
C23	" , " , 10VB47, 47/10V	6043 0180
C24	" , " , 10VB47, 47/10V	6043 0180
C25	" , polystyrene , CQ09SCIH681K, 680P/50V	5054 3430

PARTS LIST
Talkback Amplifier PCB Assembly
(Model 304)
REV._____

Ref. No.	Description	Parts No.
C26	Capacitor, electrolytic, 6.3VB470, 470/6.3V	5055 4600
C27	" , " , 25VB10, 10/25V	5055 4040
C28	" , " , 25VB10, 10/25V	5055 4040
C29-32	" , ceramic, 0.01/50V	6044 0050
C33	" , electrolytic, 25VB10, 10/25V	5055 4040
C34	" , ceramic, 0.01/50V	6044 0050
C35	" , electrolytic, 25VB10, 10/25V	5055 4040
C36-38	" , ceramic, 0.01/50V	6044 0050
C39	" , electrolytic, 25VB10, 10/25V	5055 4040
C40	" , " , 25VB10, 10/25V	5055 4040
C41-43	" , " , 50VB1, 1/50V	5055 4540
C44	" , mylar, CQ92MCIH102K, 1000P/50V	6044 5160

PARTS LIST
Talkback Amplifier PCB Assembly
(Model 304)
REV._____

Ref. No.	Description	Parts No.
R86	Resistor, carbon, FCR25, 47Kohm	
R87	" , " , " , 10Kohm	
R88	" , " , " , 10Kohm	
R89	" , " , " , 47Kohm	
R90	" , " , " , 47Kohm	
R91	" , " , " , 470Kohm	
R92	" , " , " , 100 ohm	
R93	" , " , " , 47Kohm	
R94	" , " , " , 120Kohm	
R95	" , " , " , 1Kohm	
R96	" , " , " , 100Kohm	
R97	" , " , " , 6.8Kohm	
R98	" , " , " , 15Kohm	
R99	" , " , " , 22Kohm	
R100	" , " , " , 8.2Kohm	
R101	" , " , " , 33Kohm	
R102	" , " , " , 47Kohm	
R103	" , " , " , 100 ohm	
R104	" , " , " , 8.2Kohm	
R105	" , " , " , 6.8Kohm	
R106	" , " , " , 3.3Kohm	
R107	" , " , " , 22Kohm	
R108	(deleted)	
R109	(deleted)	
R110	Resistor, carbon, FCR25, 33Kohm	
R111	" , " , " , 8.2Kohm	
R112	" , " , " , 220Kohm	
R113	" , " , " , 470Kohm	
R114	" , " , " , 1Kohm	
R115	" , " , " , 33Kohm	
R116	" , " , " , 10Kohm	
R117	" , " , " , 680 ohm	
R118	" , " , " , 10Kohm	
R119	" , " , " , 10Kohm	

PARTS LIST
Aux B Amplifier PCB Assembly
(Model 303B)
REV._____

Ref. No.	Description	Parts No.
R51	Resistor, carbon, FCR25, 680 ohm	
R52	" , " , " , 3.3Kohm	
R53	" , " , " , 1Kohm	
R54	" , " , " , 5.1Kohm	
R55	" , " , " , 18Kohm	
R56	" , " , " , 33Kohm	
R57	" , " , " , 8.2Kohm	
R58	" , " , " , 220Kohm	
R59	" , " , " , 33Kohm	
R60	" , " , " , 1Kohm	
R61	" , " , " , 470Kohm	
R62	" , " , " , 10Kohm	
R63	" , " , " , 680 ohm	
R64	" , " , " , 3.3Kohm	
R65	" , " , " , 1Kohm	
R66	" , " , " , 5.1Kohm	
R67	" , " , " , 18Kohm	
R68	" , " , " , 33Kohm	
R69	" , " , " , 8.2Kohm	
R70	" , " , " , 220Kohm	
R71	" , " , " , 33Kohm	
R72	" , " , " , 1Kohm	
R73	" , " , " , 470Kohm	
R74	" , " , " , 10Kohm	
R75	" , " , " , 680 ohm	
R76	" , " , " , 3.3Kohm	
R77	" , " , " , 15Kohm	
R78	" , " , " , 39Kohm	
R79	" , " , " , 47Kohm	
R80	" , " , " , 6.8Kohm	
R81	" , " , " , 4.7Kohm	
R82	" , " , " , 22Kohm	
R83	" , " , " , 10Kohm	
R84	" , " , " , 10Kohm	
R85	" , " , " , 22Kohm	

PARTS LIST
Aux B Amplifier PCB Assembly
(Model 303B)
REV._____

Ref. No.	Description	Parts No.
C1-4	Capacitor, electrolytic, 10VB22, 22/10V	6043 0160
C5	" , " , 25VB4.7, 4.7/25V	5055 4530
C6	" , " , 50VB1, 1/50V	5055 4540
C7	" , " , 25VB4.7, 4.7/25V	5055 4530
C8	" , " , 25VB4.7, 4.7/25V	5053 4530
C9	" , " , 50VB1, 1/50V	5055 4540
C10	" , " , 25VB4.7, 4.7/25V	5055 4530
C11	" , " , 25VB4.7, 4.7/25V	5055 4530
C12	" , " , 50VB1, 1/50V	5055 4540
C13	" , " , 25VB4.7, 4.7/25V	5055 4530
C14	" , " , 25VB4.7, 4.7/25V	5055 4530
C15	" , " , 50VB1, 1/50V	5055 4540
C16	" , " , 25VB4.7, 4.7/25V	5055 4530
C17	" , " , 25VB4.7, 4.7/25V	5055 4530
C18-20	" , " , 16VB10, 10/16V	5055 4050
C21	" , " , 25VB4.7, 4.7/25V	5055 4530
C22	" , " , 16VB10, 10/16V	5055 4050
C23	" , " , 16VB10, 10/16V	5055 4050
C24-27	" , ceramic, ECK-D-05-103Z, 0.01/50V	6044 0050
C28	" , electrolytic, 25VB10, 10/25V	5055 4050
C29	" , " , 25VB10, 10/25V	5055 4050
C30	(deleted)	
C31	" , " , 25VB4.7, 4.7/25V	5055 4530
C32	" , " , 25VB4.7, 4.7/25V	5055 4530
C33	" , " , 50VB1, 1/50V	5055 4540

PARTS LIST
Aux B Amplifier PCB Assembly
(Model 303B)
REV._____

Talkback Amplifier PCB

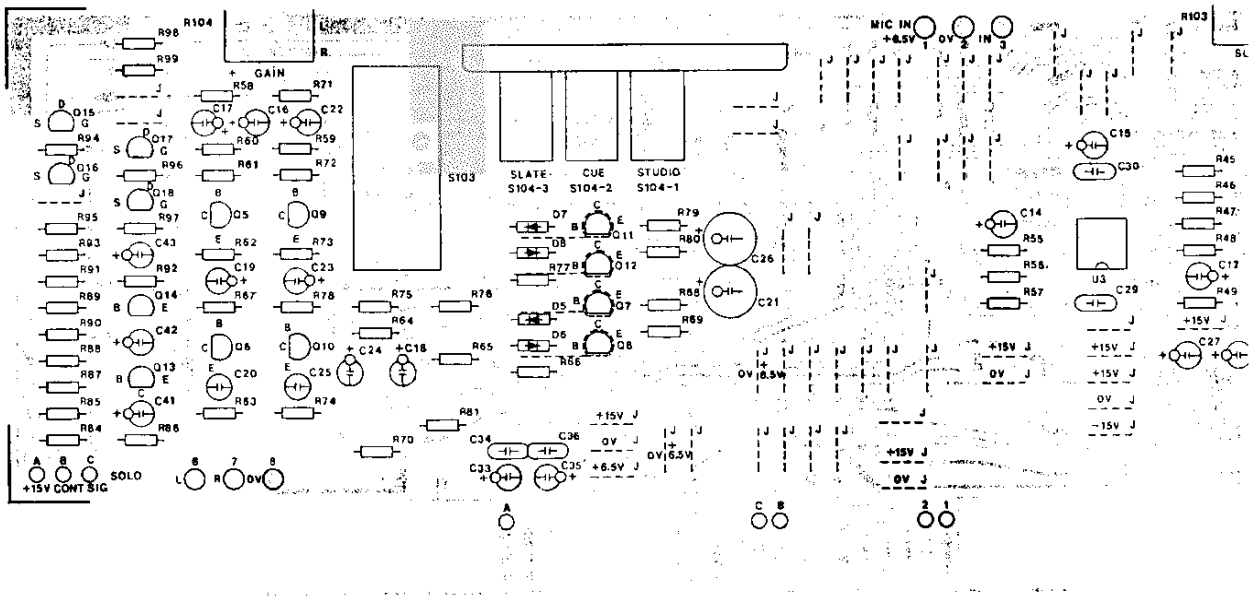

PARTS LIST

Title	Talkback Amplifier PCB Assembly	Assembly No. 6085 4120
Ref. No.	Description	Parts No.
1	PCB, talkback amplifier	6050 4732
U1-3	Integrated circuit, 4558D-F	6048 6070
Q1	Transistor, 2SA725F	6048 0520
Q2	" , 2SC1312Y-G	6048 0450
Q3	" , 2SD355	6048 0780
Q4	" , 2SB525	6048 0790
Q5	" , 2SA725F	6048 0520
Q6	" , 2SC1312Y-G	6048 0450
Q7	" , 2SD355	6048 0780
Q8	" , 2SB525	6048 0790
Q9	" , 2SA725F	6048 0520
Q10	" , 2SC1312Y-G	6048 0450
Q11	" , 2SD355	6048 0780
Q12	" , 2SB525	6048 0790
Q13	" , 2SC1312Y-G	6048 0450
Q14	" , 2SC1312Y-G	6048 0450
Q15-18	FET, 2N5462	6048 0710
S_{103}^{101}	Switch, lever, SLR523	6051 8090
S102	Switch, rotary, SRZ V-04-6-N	6051 0740
S104	Switch, push	6051 4370
D1-8	Diode, IS953	5042 2720
R101-3	Potentiometer, rotary, single, 10Kohm, taper A	6042 1170
R104	" , " , dual, 10Kohm, taper A,A	6042 1160
	Heat sink, TES-5	6037 5070

R1	Resistor, carbon, FCR25, 1Kohm
R2	" , " , " , 150Kohm
R3	" , " , " , 56Kohm
R4	" , " , " , 18Kohm
R5	" , " , " , 150 ohm
R6	" , " , " , 4.7Kohm
R7	" , " , " , 220 ohm
R8	" , " , " , 270 ohm
R9	" , " , " , 100 ohm
R10	" , " , " , 1Kohm

PARTS LIST
Talkback Amplifier PCB Assembly
(Model 304)
REV._____

PARTS LIST

Title	Aux B Amplifier PCB Assembly	Assembly No. 6085 4090
Ref. No.	Description	Parts No.
1	PCB, Aux B Amplifier	6050 4692
U1-11	Integrated circuit, 4558D-F	6048 6070
Q1-5	Transistor, 2SA697D	6048 0360
Q6	" , 2SC1312Y-G	6048 0450
D1-15	Diode, 1S953	5042 2720
S1	Switch, slide, SSA-042	6051 6160
S2	" , rotary, SRG-R042	6051 0730
S3	" , slide	6051 4350
R101	Potentiometer, rotary , dual, 20Kohm, taper A,C	6042 1180
R102	" , trimmer, LEV-4R, 10Kohm, taper C	6041 2120
R201	" , , 10ϕSR19R, 4.7Kohm, taper B	5053 3460
R202	" , " , 10ϕSR19R, 2.2Kohm, "	5053 3460
R203	" , " , 10ϕSR19R, 4.7Kohm, "	5053 3460
R204	" , " , 10ϕSR19R, 2.2Kohm, "	5053 3460
R205	" , " , 10ϕSR19R, 4.7Kohm, "	5053 3460
R206	" , " , 10ϕSR19R, 2.2Kohm, "	5053 3460
R207	" , " , 10ϕSR19R, 4.7Kohm, "	5053 3460
R208	" , " , 10ϕSR19R, 2.2Kohm, "	5053 3460
R209	" , " , 10ϕSR19R, 4.7Kohm, "	5053 3460
R210	" , " , 10ϕSR19R, 2.2Kohm, "	5053 3460
R1	Resistor, carbon, FCR25, 100Kohm	
R2	" , " , " , 1Kohm	
R3	(deleted)	
R4	" , " , " , 15Kohm	
R5	" , " , " , 10Kohm	
R6	" , " , " , 330 ohm	
R7	" , " , " , 47Kohm	
R8	" , " , " , 100Kohm	
R9	" , " , " , 1Kohm	
R10	(deleted)	
R11	" , " , " , 15Kohm	
R12	" , " , " , 10Kohm	
R13	" , " , " , 330 ohm	
R14	" , " , " , 47Kohm	
R15	" , " , " , 100Kohm	

PARTS LIST
Aux B Amplifier PCB Assembly
(Model 303B)
REV._____

Ref. No.	Description	Parts No.
R16	Resistor, carbon, FCR25, 1Kohm	
R17	(deleted)	
R18	" , " , " , 15Kohm	
R19	" , " , " , 10Kohm	
R20	" , " , " , 330 ohm	
R21	" , " , " , 47Kohm	
R22	" , " , " , 100Kohm	
R23	" , " , " , 1Kohm	
R24	(deleted)	
R25	" , " , " , 15Kohm	
R26	" , " , " , 10Kohm	
R27	" , " , " , 330 ohm	
R28	" , " , " , 47Kohm	
R29	" , " , " , 1Kohm	
R30	" , " , " , 5.1Kohm	
R31	" , " , " , 18Kohm	
R32	" , " , " , 33Kohm	
R33	" , " , " , 8.2Kohm	
R34	" , " , " , 220Kohm	
R35	" , " , " , 33Kohm	
R36	" , " , " , 1Kohm	
R37	" , " , " , 470Kohm	
R38	" , " , " , 10Kohm	
R39	" , " , " , 680 ohm	
R40	" , " , " , 3.3Kohm	
R41	" , " , " , 1Kohm	
R42	" , " , " , 5.1Kohm	
R43	" , " , " , 18Kohm	
R44	" , " , " , 33Kohm	
R45	" , " , " , 8.2Kohm	
R46	" , " , " , 220Kohm	
R47	" , " , " , 33Kohm	
R48	" , " , " , 1Kohm	
R49	" , " , " , 470Kohm	
R50	" , " , " , 10Kohm	

PARTS LIST
Aux B Amplifier PCB Assembly
(Model 303B)
REV._____

Ref. No.	Description	Parts No.
C14	(deleted)	
C15	Capacitor, electrolytic, 35T2200, 2200/35V	6043 1260
C16	" , " , 35T2200, 2200/35V	6043 1260
C17	(deleted)	
C18	" , dipped tantalum, SSG50-R33, 0.33/35V	6043 2320
C19	" , electrolytic, 25VB22, 22/25V	6043 0400
C20	" , ceramic, ECK-D-05-103Z, 0.01/50V	6044 0050
C21	(deleted)	
C22	" , electrolytic, 35T2200, 2200/35V	6043 1260
C23	" , dipped tantalum, SSG50-R33, 0.33/35V	6043 2320
C24	" , " " , SSG50-R33, 0.33/35V	6043 2320
C25	" , electrolytic, 25VB22, 22/25V	6043 0400
C26	" , ceramic, ECK-D-05-103Z, 0.01/50V	6044 0050
C27	(deleted)	
C28	(deleted)	

PARTS LIST
Power Supply PCB Assembly
(Model PS15)
REV._____

PARTS LIST

Title	Control Room Monitor Amplifier PCB Ass'y	Assembly No. 6085 4100
Ref. No.	Description	Parts No.
1	PCB, monitor, amplifier	6050 4712
U1-7	Integrated circuit, 4558D	6048 6070
Q1,2	Transistor, 2SC1312Y-G	6048 0450
Q3-8	FET, 2N5462	6048 0710
Q9,10	Transistor, 2SC1312Y-G	6048 0450
S1	Switch, push	6051 4360
R101	Potentiometer, rotary , dual, 10Kohm, taper A,A	6042 1160
R102	" , " , single, 10Kohm, taper A	6042 1170
R1-14	Resistor, carbon, FCR25, 22Kohm	
R15-17	" , " , " , 220Kohm	
R18	" , " , " , 22Kohm	
R19	" , " , " , 33Kohm	
R20	" , " , " , 680 ohm	
R21	" , " , " , 100 ohm	
R22	" , " , " , 47Kohm	
R23	" , " , " , 220Kohm	
R24	" , " , " , 22Kohm	
R25	(deleted)	
R26	(deleted)	
R27	" , " , " , 100 ohm	
R28	" , " , " , 47Kohm	
R29	" , " , " , 100Kohm	
R30	" , " , " , 39Kohm	
R31	" , " , " , 6.8Kohm	
R32	" , " , " , 47Kohm	
R33	" , " , " , 4.7Kohm	
R34	" , " , " , 7.5Kohm	
R35	" , " , " , 33Kohm	
R36	" , " , " , 47Kohm	
R37	" , " , " , 15Kohm	
R38	" , " , " , 47Kohm	
R39	" , " , " , 33Kohm	
R40	" , " , " , 5.6Kohm	

PARTS LIST
Control Room Monitor Amplifier
PCB Assembly (Model 305A)
REV._____

Ref. No.	Description	Parts No.
R41	Resistor, carbon, FCR25, 100 ohm	
R42	" , " , " , 100 ohm	
R43	" , " , " , 100 ohm	
R44	" , " , " , 15Kohm	
R45	" , " , " , 220Kohm	
R46	" , " , " , 390Kohm	
R47	" , " , " , 100 ohm	
R48	" , " , " , 47Kohm	
R49	" , " , " , 5.6Kohm	
R50	" , " , " , 100 ohm	
R51	" , " , " , 100 ohm	
R52	" , " , " , 15Kohm	
R53	" , " , " , 220Kohm	
R54	" , " , " , 390Kohm	
R55	" , " , " , 100 ohm	
R56	" , " , " , 47Kohm	
R57	" , " , " , 100 ohm	
R58	" , " , " , 1Kohm	
R59	" , " , " , 100Kohm	
R60	" , " , " , 47Kohm	
R61	" , " , " , 1Kohm	
R62	" , " , " , 100Kohm	
R63	" , " , " , 47Kohm	
R64	" , " , " , 1Kohm	
R65	" , " , " , 100Kohm	
R66	" , " , " , 47Kohm	
R67	" , " , " , 1Kohm	
R68	" , " , " , 100Kohm	
R69	" , " , " , 47Kohm	
R70	" , " , " , 1Kohm	
R71	" , " , " , 100Kohm	
R72	" , " , " , 47Kohm	
R73	" , " , " , 1Kohm	
R74	" , " , " , 100Kohm	
R75	" , " , " , 47Kohm	

PARTS LIST
Control Room Monitor Amplifier
PCB Assembly(Model 305A)
REV._____

Ref. No.	Description	Parts No.
R76	Resistor, carbon, FCR25, 220Kohm	
R77	" , " , " , 5.6Kohm	
R78	" , " , " , 100 ohm	
R79	" , " , " , 390Kohm	
R80	" , " , " , 100 ohm	
R81	" , " , " , 390Kohm	
R82	" , " , " , 100 ohm	
R83	" , " , " , 39Kohm	
R84	" , " , " , 6.8Kohm	
R85	" , " , " , 47Kohm	
R86	" , " , " , 330 ohm	
R87	" , " , " , 15Kohm	
R88	" , " , " , 330 ohm	
R89	" , " , " , 33Kohm	
R90	" , " , " , 22Kohm	
C1	Capacitor, electrolytic, 25VB4.7, 4.7/25V	5055 4530
C2	" , " , 25VB4.7, 4.7/25V	5055 4530
C3-5	" , " , 50VB1, 1/50V	5055 4540
C6	" , " , 25VB4.7, 4.7/25V	5055 4530
C7	" , " , 10VB22, 22/10V	6043 0160
C8	" , " , 16VB10, 10/16V	5055 4050
C9	" , " , 25VB4.7, 4.7/25V	5055 4530
C10	" , " , 10VB22, 22/10V	6043 0160
C11	" , " , 16VB10, 10/16V	5055 4050
C12	" , " , 25VB10, 10/25V	5055 4040
C13	" , " , 25VB10, 10/25V	5055 4040
C14-17	" , ceramic, ECK-05-D-103Z, 0.01/50V	6044 0050
C18	" , electrolytic, 50VB1, 1/50V	5055 4540
C19	" , " , 25VB4.7, 4.7/25V	5055 4530
C20	" , " , 50VB1, 1/50V	5055 4540
C21	" , " , 25VB4.7, 4.7/25V	5055 4530
C22	" , " , 50VB1, 1/50V	5055 4540
C23	" , " , 25VB4.7, 4.7/25V	5055 4530
C24	" , " , 50VB1, 1/50V	5055 4540
C25	" , " , 25VB4.7, 4.7/25V	5055 4530

PARTS LIST
Control Room Monitor Amplifier
PCB Assembly (Model 305A)
REV._____

Ref. No.	Description	Parts No.
C26	Capacitor, electrolytic, 50VB1, 1/50V	5055 4540
C27	" , " , 25VB4.7, 4.7/25V	5055 4530
C28	" , " , 50VB1, 1/50V	5055 4540
C29	" , " , 25VB4.7, 4.7/25V	5055 4530
C30	" , " , 25VB4.7, 4.7/25V	5055 4530
C31	" , ceramic, ECK-D-05-103Z, 0.01/50V	6044 0050
C32	" , electrolytic, 25VB10, 10/25V	5055 4040
C33	" , " , 50VB1, 1/50V	5055 4540
C34	" , " , 50VB1, 1/50V	5055 4540

PARTS LIST
Control Room Monitor Amplifier
PCB Assembly (Model 305A)
REV._____

PARTS LIST

Title	Power Supply PCB Assembly	Assembly No. 6085 4130
Ref. No.	Description	Parts No.
1	PCB, power supply	6050 4752
U1,2	Integrated circuit, FS7815M	6048 6150
U3	" " , FS7805M	6048 6140
Q1-3	Transistor, 2SB524-D	6048 0490
D1-6	Diode, 1S953	5042 2720
D4	Diode, S2VB20	6048 3540
F1-3	Fuse, 5A, 250V	5142 1150
F1-3	Fuse, 5A, 250V	5142 1740
F1-3	Fuse, 5A, 250V	5142 2130
F4	Fuse, 2.5A, 250V	5142 1140
F4	Fuse, 2.5A, 250V	5142 1710
F4	Fuse, 2.5A, 250V	5142 2100
F1-4	Holder, fuse (UL, CSA, DM)	5041 2370
	Holder, fuse (CEE)	5142 0870
R1	Resistor, carbon, FCR25, 100 ohm	
R2	" , " , " , 100 ohm	
R3	" , " , " , 100 ohm	
R4	" , " , " , 220 ohm	
C1	Capacitor, electrolytic, 35T2200, 2200/35V	6043 1260
C2	" , " , 35T2200, 2200/35V	6043 1260
C3	(deleted)	
C4	" , dipped tantalum, SSG50-R33, 0.33/35V	6043 2320
C5	" , electrolytic	6043 0400
C6	" , ceramic, ECK-05-D-103Z, 0.01/50V	6044 0050
C7	(deleted)	
C8	" , electrolytic, 35T2200, 2200/35V	6043 1260
C9	" , " , 35T2200, 2200/35V	6043 1260
C10	(deleted)	
C11	" , dipped tantalum, SSG50-R33, 0.33/35V	6043 2320
C12	" , electrolytic, 25VB22, 22/25V	6043 0400
C13	" , ceramic, ECK-D-05-103Z, 0.01/50V	6044 0050

PARTS LIST
Power Supply PCB Assembly
(Model PS15)
REV._____