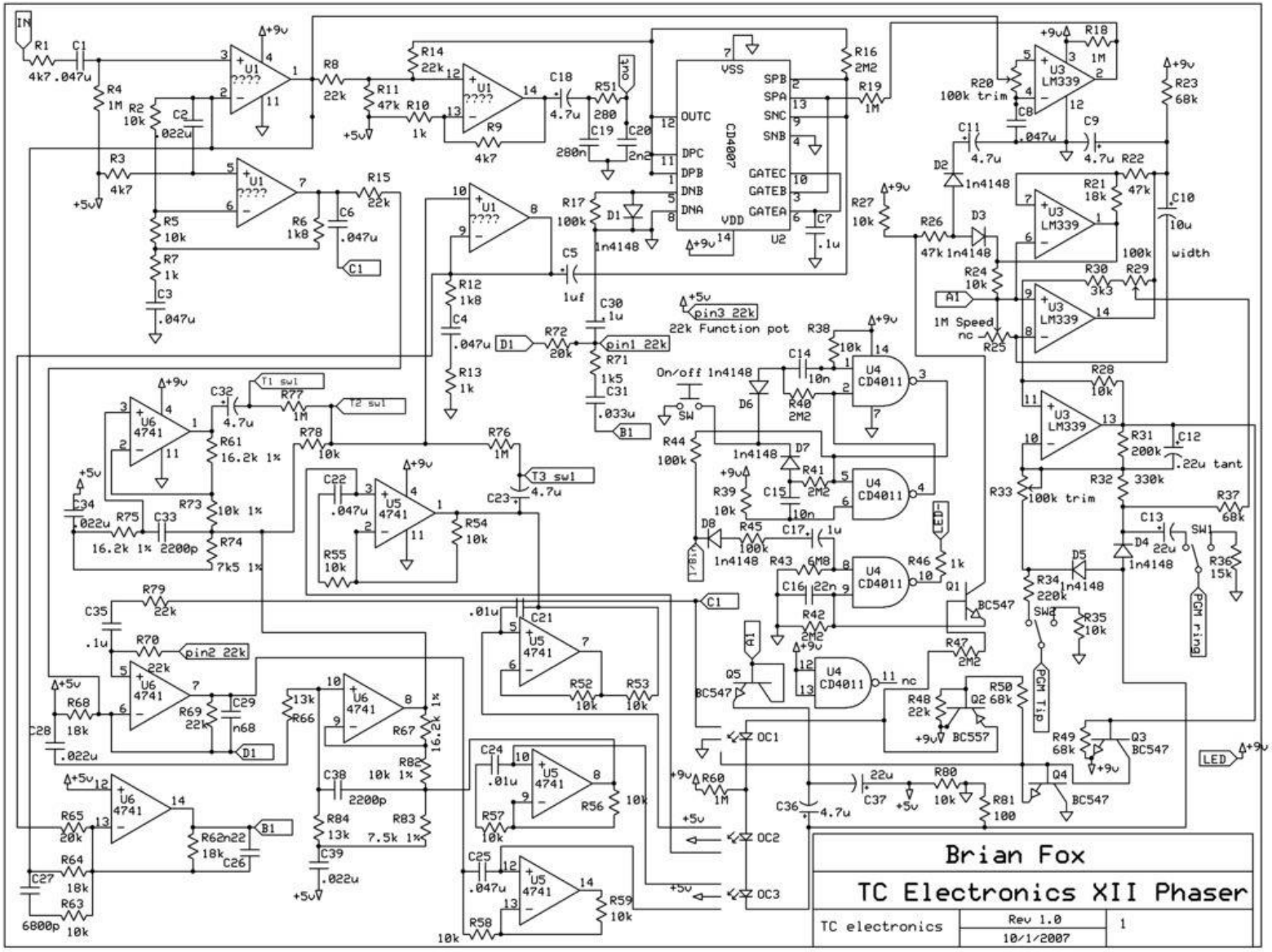
Brian Fox
TC Electronics XII Phaser
TC electronics
Rev 1.0
10/1/2007
1
CD4007
U2
VSS
SPB
SPA
SNC
SNB
OUTC
DPC
DPB
DNB
DNA
VDD
GATEC
GATEB
GATEA
22k Function pot
On/off 1n4148
1M Speed
width
PGM ring
PGM Tip
LED
IN
OC1
OC2
OC3