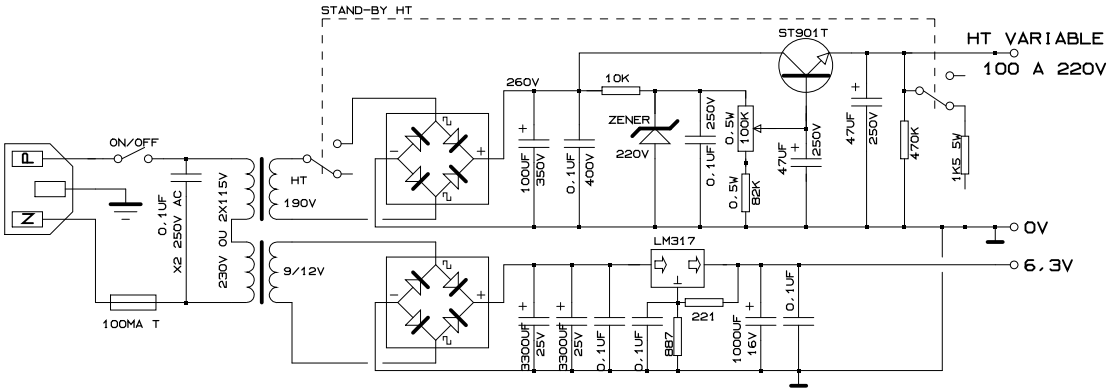
STAND-BY HT
ST901T
HT VARIABLE
100 A 220V
260V
10K
ZENER
220V
ON/OFF
P
N
0.1UF
X2 250V AC
230V 0U 2X115V
HT
190V
9/12V
100MA T
100UF
350V
0.1UF
400V
0.1UF
250V
0.5W
100K
0.5W
82K
47UF
250V
47UF
250V
470K
1K5 5W
0V
6.3V
LM317
221
3300UF
25V
3300UF
25V
0.1UF
0.1UF
887
1000UF
16V
0.1UF