PANEL DIAGRAM

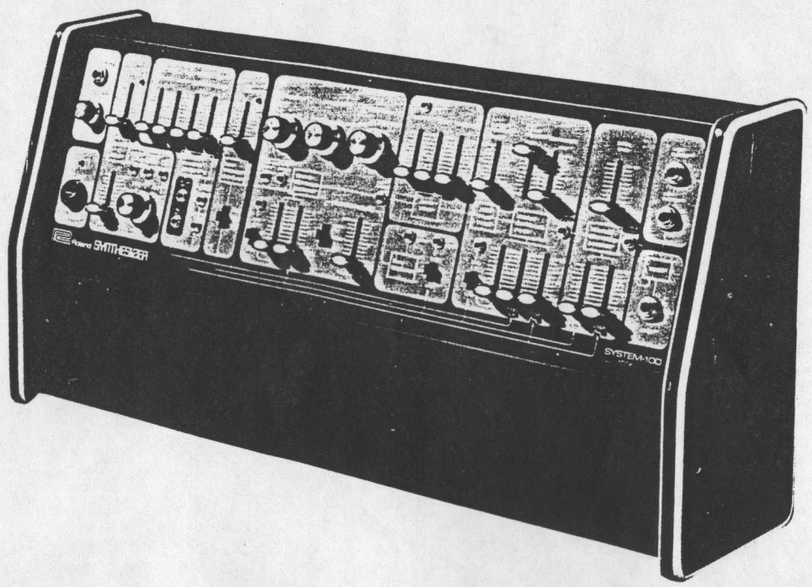

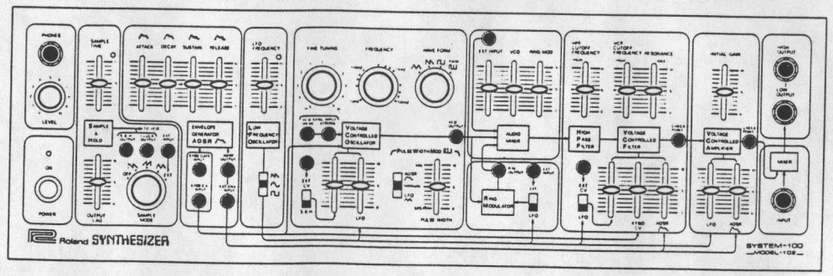

CONTENTS

		Page
1.	SPECIFICATIONS	2
2.	PANEL DIAGRAM	4
3.	DISASSEMBLY	5
4.	GENERAL LAYOUT	6
5.	CIRCUIT DESCRIPTION	7
6.	GENERAL BLOCK DIAGRAM	9
7.	SEMICONDUCTOR ELECTRODES	9
8.	PRINTED CIRCUIT BOARD ASSEMBLY PARTS LIST AND CIRCUIT DIAGRAMS	10
	8-1. VCO-5 VCO BOARD	10
	8-2. OP-28 VCF-VCA BOARD	12
	8-3. OP-29 RING BOARD	14
	8-4. PS-22, PS-24 POWER SUPPLY BOARD	16
9.	WIRING DIAGRAMS	17
10.	ADJUSTMENTS	18
11.	PARTS LIST	31
12.	PARTS PICTURE	35

MODEL-102

1. VCO (Voltage Controlled Oscillator)

Frequency Range:	3 Hz – 40 KHz
VCO Output:	10 Vp-p
VCO Sync. Input:	Strong and Weak

CONTROLS

Waveforms:	Triangular, Sawtooth, Square, Pulse (Pulse Width Controlled)
Frequency:	10 Hz – 10 KHz (at A2 key) continuously variable
Fine Tuning:	1 oct.
Pulse Width:	5% – 50% (Manual, ADSR, LFO)
Ext. CV or S/H:	1V/oct.
LFO	

2. RING MODULATOR

Ext. Input:	10Vp-p
Ring Modulator Output:	10Vp-p

3. AUDIO MIXER

Ext. Input Impedance:	more than 50KΩ

CONTROLS

VCO, Ring Modulator, Ext. Input

4. HIGH PASS FILTER

HPF Cutoff Frequency:	10 Hz – 10 KHz

5. VCF (Voltage Controlled Filter)

Cutoff Frequency Range:	20 Hz – 100 KHz

CONTROLS

VCF Cutoff Frequency:	20 Hz – 20 KHz
Resonance:	0 – self oscillation
LFO/Ext. CV:	1V/oct.
KYBD CV	
ADSR	

6. VCA (Voltage Controlled Amplifier)

CONTROLS

Initial Gain
LFO
ADSR

7. ENVELOPE GENERATOR (ADSR)

KYBD Gate Input:	+14 from MODEL 101
KYBD CV Input:	1V/oct. from MODEL 101
ADSR Output:	+6V (contour peak)
Env. Input:	+6V (contour peak)

CONTROLS

Attack Time:	0.4 msec –3 sec.
Decay Time:	0.8 msec –6 sec.
Sustain Level:	0 – 100% (contour peak)
Release Time:	0.8 msec –6 sec.

8. LFO (Low Frequency Oscillator)

Wave Form:	Sawtooth, Sine, Square

CONTROL

LFO Frequency:	0.15 Hz, –25 Hz

9. SAMPLE AND HOLD

Ext. Input:	10Vp.p
S/H Output:	
Clock Output:	± 14.V

CONTROLS

Sample Mode:	OFF, Sawtooth, Reverse Sawtooth, Triangular, Ext. Input
Sample Time:	0.6 Hz – 125 Hz
Output Lag:	0 –2 sec.

10. OUTPUT MIXER

Input:	6Vp-p max.
Input Impedance:	50K ohm

11. AUDIO SIGNAL OUTPUT

High Output:	3Vp-p with 1K-ohm output impedance.
Low Output:	0.3Vp-p with 1K-ohm output impedance.

12. HEADPHONE OUTPUT

0.3V max. into standard 8-ohm stereo headphones.

13. DIMENSIONS AND WEIGHT

Overall Size:	610 mm wide, 155 mm deep, 305 mm high.
Net Weight:	7.5 Kg

14. POWER REQUIREMENTS

100 –120V 50 –60 Hz
220 – 250V 50 –60 Hz

15. POWER CONSUMPTION

10W max.

GENERAL LAYOUT

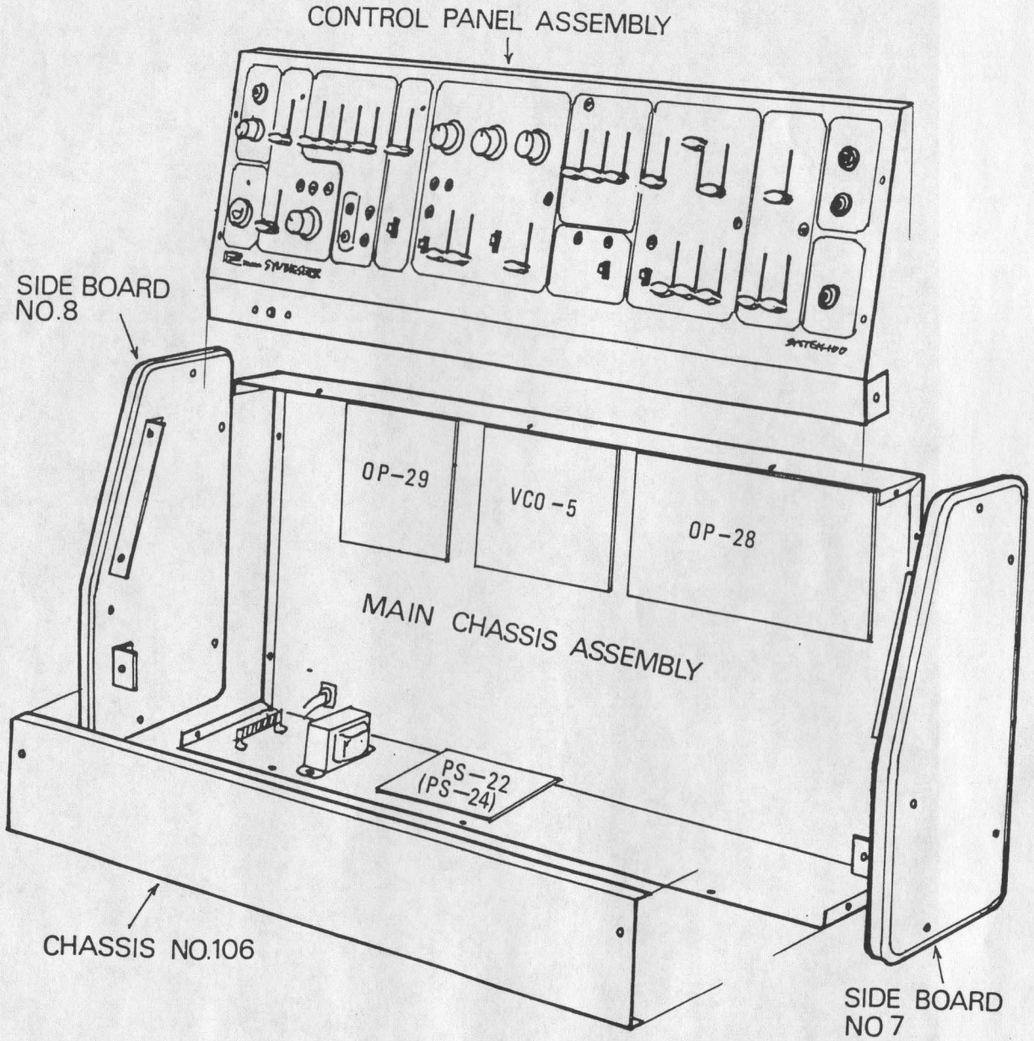

DISASSEMBLY

System-100, Model-102 can be disassembled in the following steps when necessary for checking and readjustment.
The power cord must be disconnected from the power source before proceeding with disassembly.
Remove the 5 screws on the lower front chassis.
Remove the 7 front panel screws and also loosen the 10 side board screws. The panel can be opened by pulling the top of the panel.
Use a string through the screw holes to keep the frnt panel from falling too far forward.

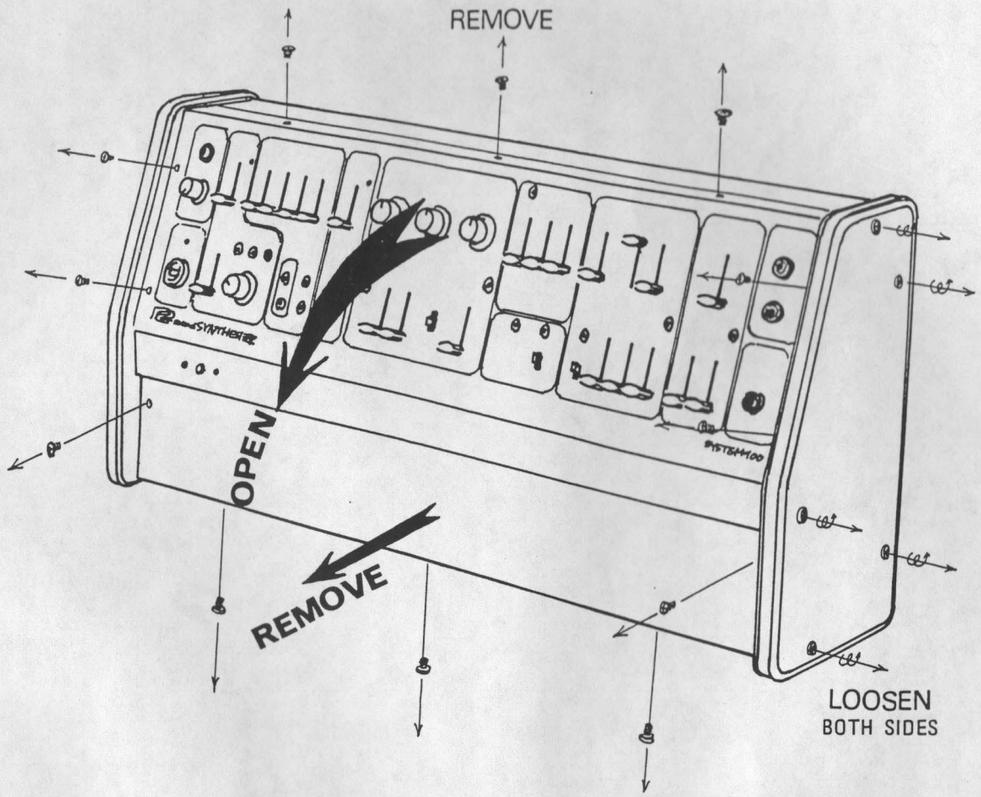

DESCRIPTION of PCB(Printed Circuit Board) ASSEMBLY

Since the circuits of the Model 102 are similar to or the same as the Model 101 circuits, refer to the Model 101 section of this manual (pp. 7, 8) for circuit descriptions not given below.

1. VCO BOARD ASSEMBLY (VCO-5)

1-1. SAMPLE and HOLD
This circuit takes the periodic samples of voltage levels from the LFO waveforms or external source to produce different patterns of up and down voltage steps.

2. VCF VCA BOARD ASSEMBLY (OP-28)

3. RING BOARD ASSEMBLY (OP-29)

3-1. RING MOD is a device which makes use of the double balanced modulation by an IC.
The RING MODULATOR is a balanced multiplier which supresses the two input frequencies but passes both the sum and difference frequencies of the inputs.

3-2. The CLOCK OSC determines the sample timing of the Sample and Hold circuit.

3-3. The LAG is a variable RC time constant for rounding off the sharp edges of the Sample and Hold output waveform.

3-4. The INVERTER is used to invert the LFO waveform for use in the Sample and Hold circuit.

3-5. The VCO SYC function uses an external pulse (usually the square wave output of the Model 101 VCO SYNC OUT jack) to synchronize the Model 102 VCO to an external source.

4. POWER SUPPLY BOARD ASSEMBLY (PS-22, PS-24)

This assembly is a voltage regulator circuit which provides constant voltages of +14V and –14V.
Note: The PS-22 board is for 100V – 120V, while the PS-24 board is for 220V – 250V.
Fuse 0.5A, Fuse Holder TF-758, of Label No. 69, are used on PS-24 alone.
For PS-22, use a jumper wire on the Fuse Holder.

GENERAL BLOCK DIAGRAM

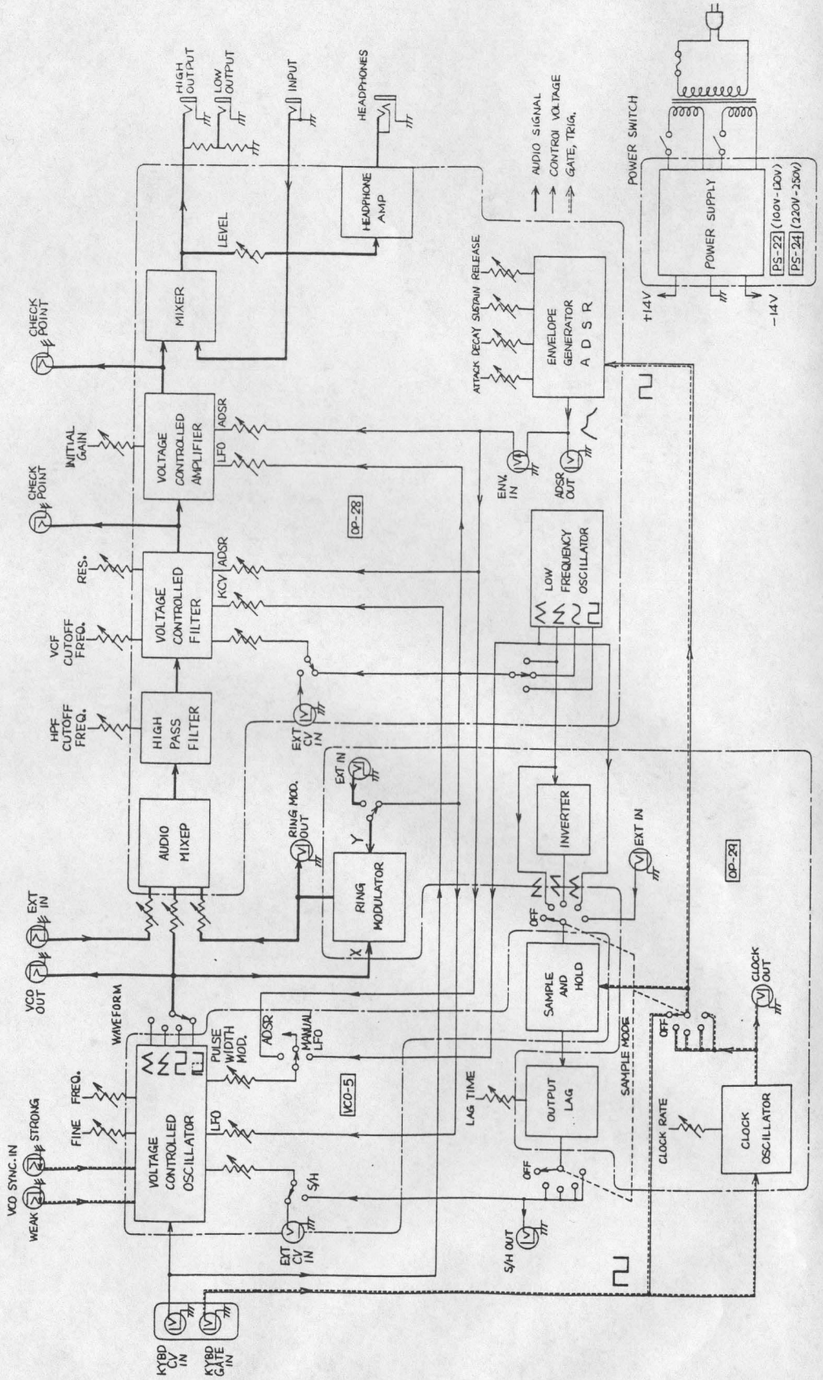

SEMICONDUCTOR ELECTRODES (TOP VIEW)

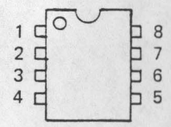

CA1458(G)

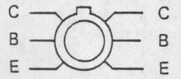

ITS1276

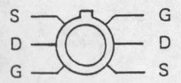

E-412
(ITS30546)

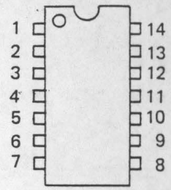

723CN

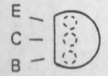

2SA733(Q)
2SC945(Q)
2SC828(R)

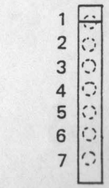

TA7136P

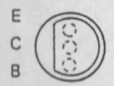

2SC1000(GR)

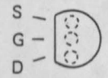

2SK30A(Y)
2SK30A(GR)

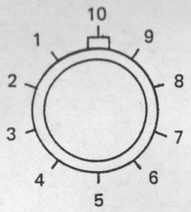

μA726

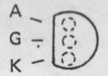

N13T1

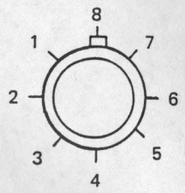

TA7504M
301AH
CA3080
CA3130

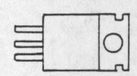

2SD234(O)

VCO-5 VCO BOARD ASSEMBLY PARTS LAYOUT (152-005)

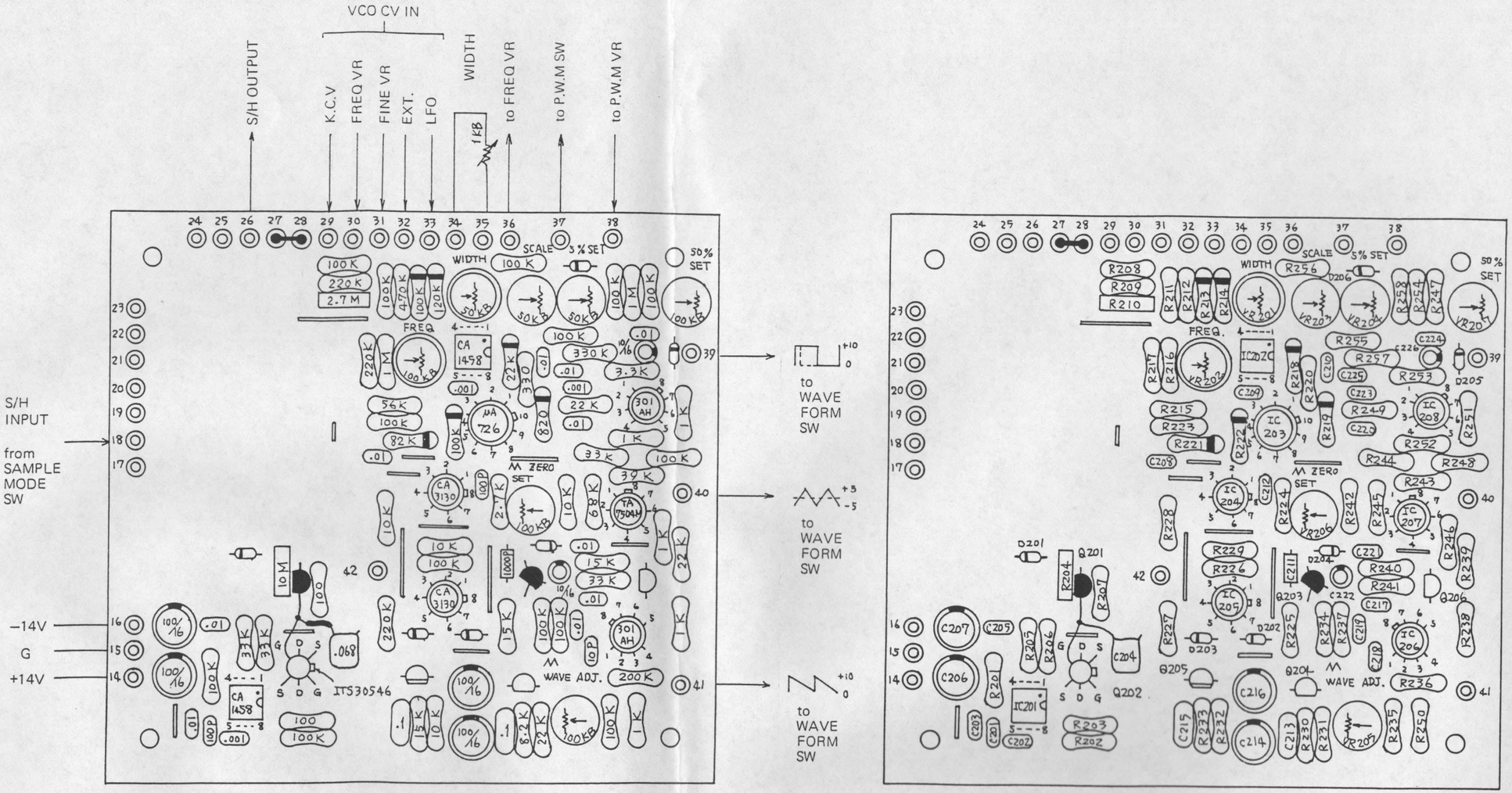

: Metal Film Type

: Carbon Type

: Polystyene Film Capacitor

: 2SK30A (GR)

: 2SA733 (Q)

: 2SC945 (Q)

: 1S2473

: Metal Film Resistor (± 1%)

VCO-5 VCO BOARD CIRCUIT DIAGRAM

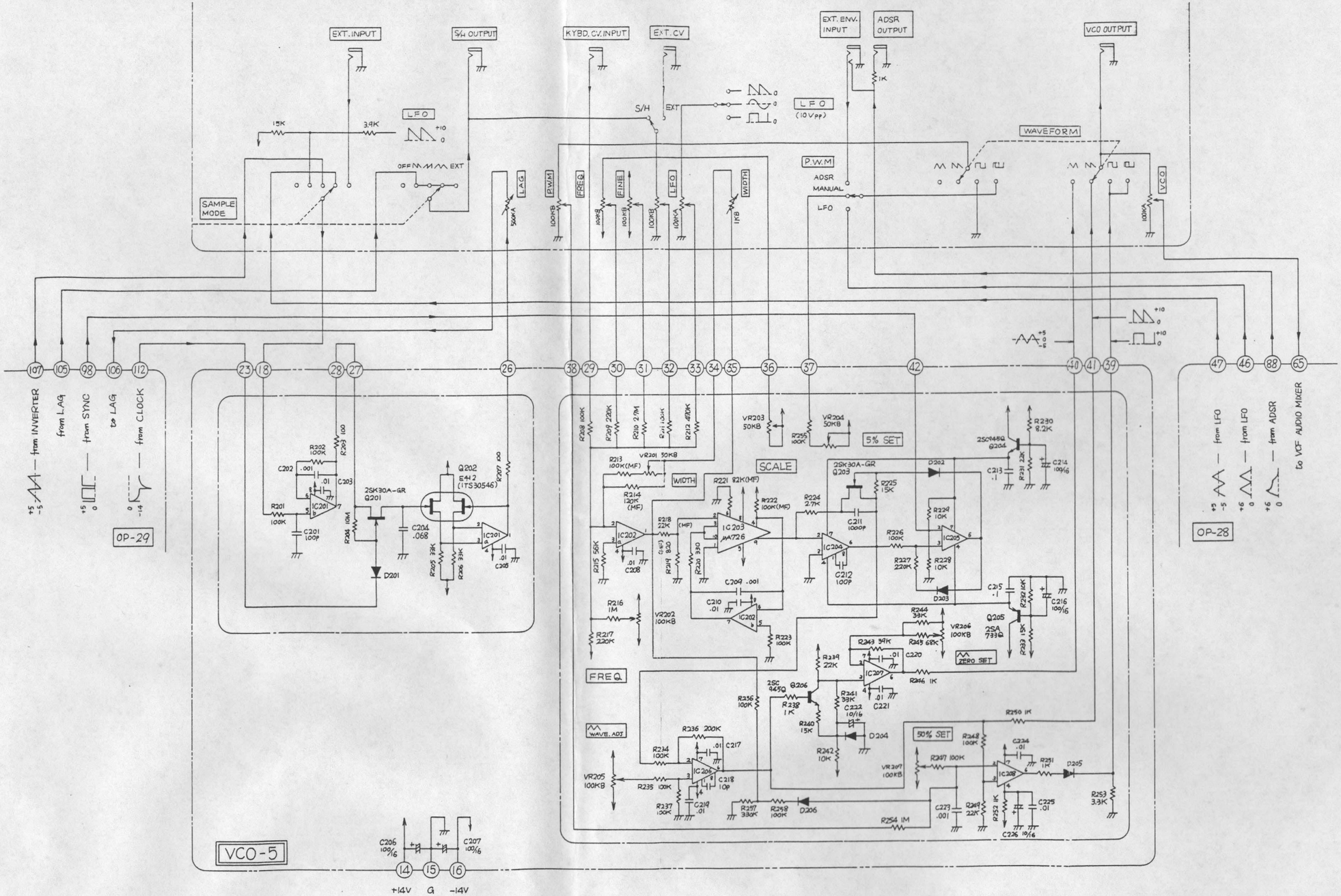

NOTES: IC201, 202 ..... CA1458G
IC204, 205 ..... CA3130
IC206, 208 ..... 301AH
IC207 ..... TA7504M
(MF): Metal Oxide Film Resistor.
ALL DIODES ARE 1S2473

OP-28 VCF·VCA BOARD CIRCUIT DIAGRAM

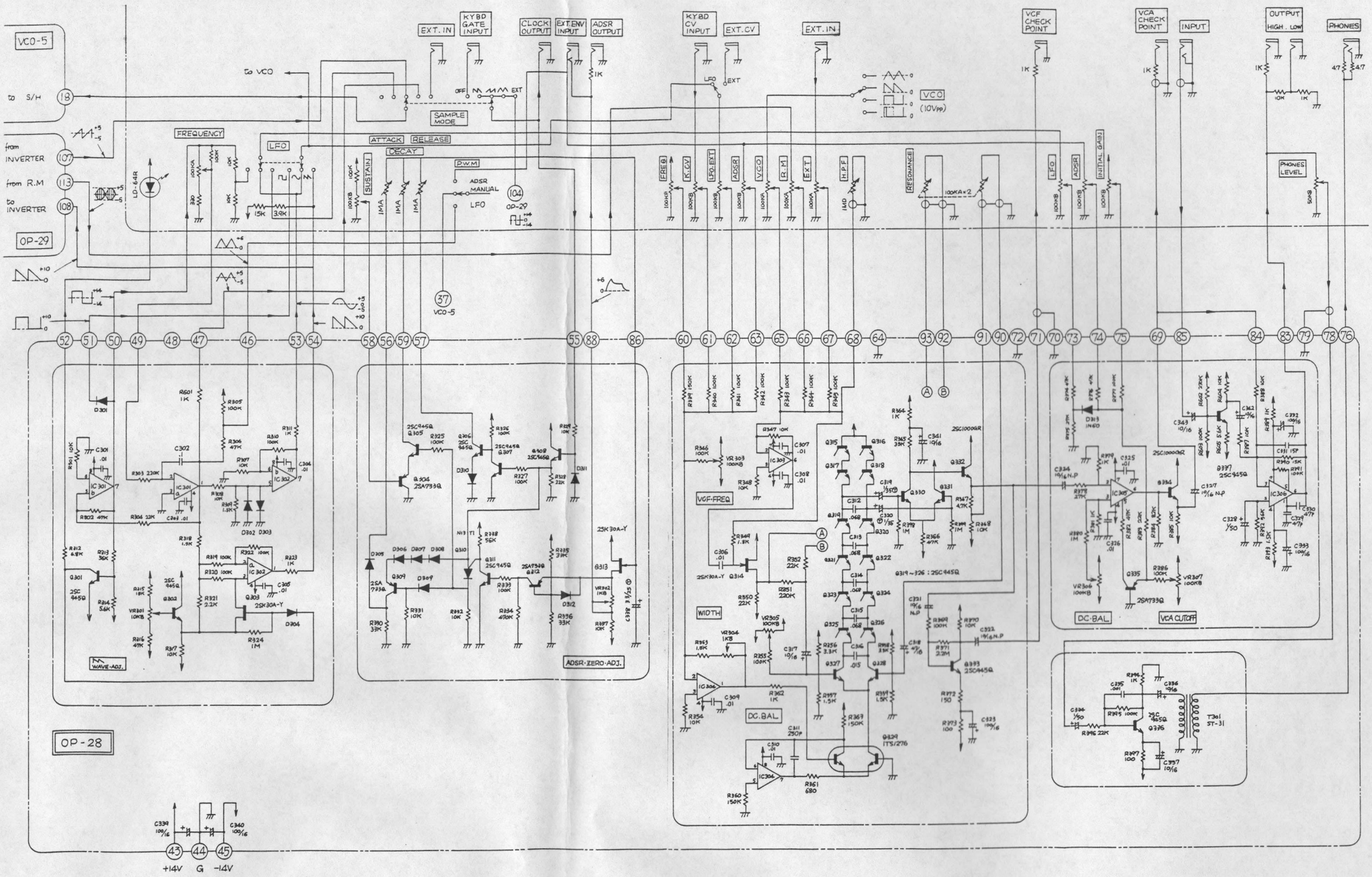

NOTES:

Q315-318	2SC945Q (SELECTED VCF)
Q327, 328, 330, 331	2SC1000GR (SELECTED hfe)
IC301, 302, 304	CA1458G
IC303	TA7504M
IC305	CA3080 (SELECTED C)
IC306	TA7136P

Ⓣ : Tantalum Capacitor
ALL DIODES ARE 1S2473
UNLESS OTHERWISE SPECIFIED

OP-27 VCF VCA BOARD ASSEMBLY PARTS LAYOUT (149-027)

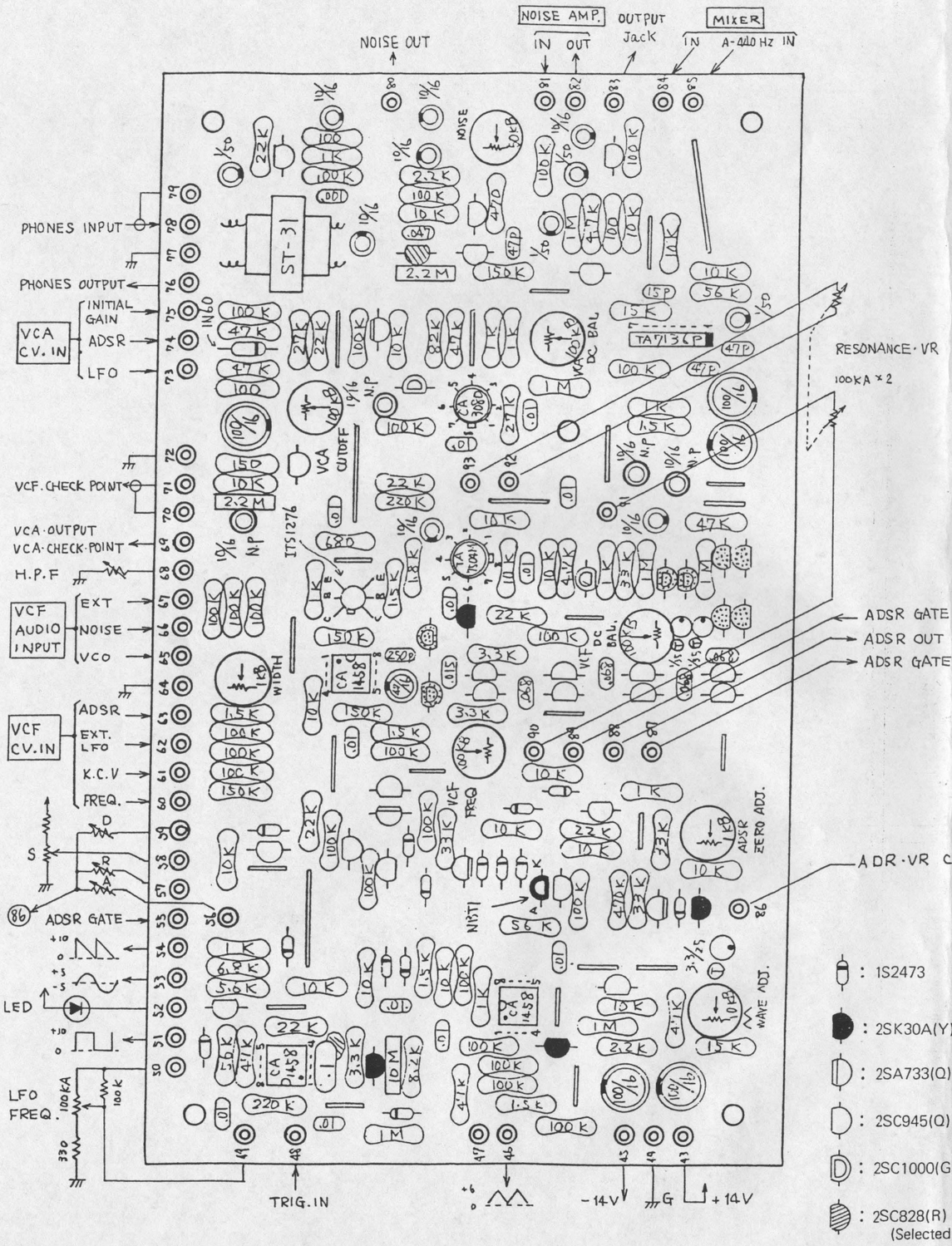

OP-29 RING BOARD ASSEMBLY PARTS LAYOUT (149-029)

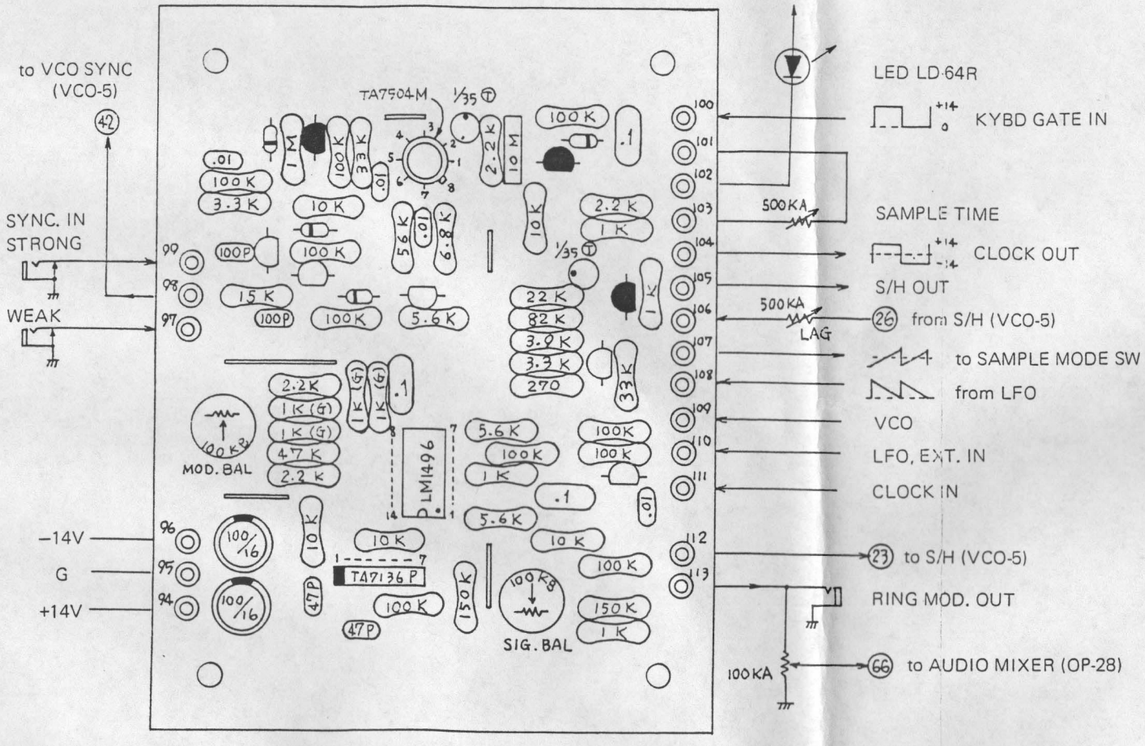

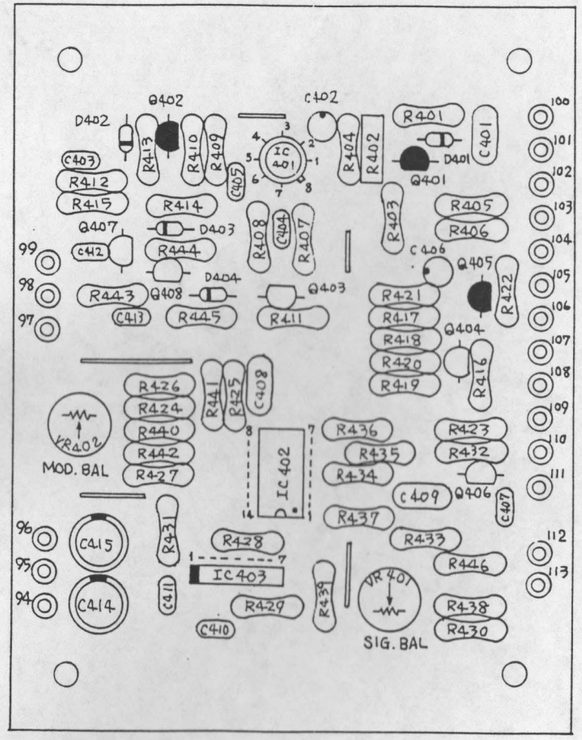

: 1S2473

: 2SK30A (GR)

: 2SC945 (Q)

Ⓣ : Tantalum Capacitor

(G) : 1/4R ± 2%

OP-29 RING BOARD CIRCUIT DIAGRAM

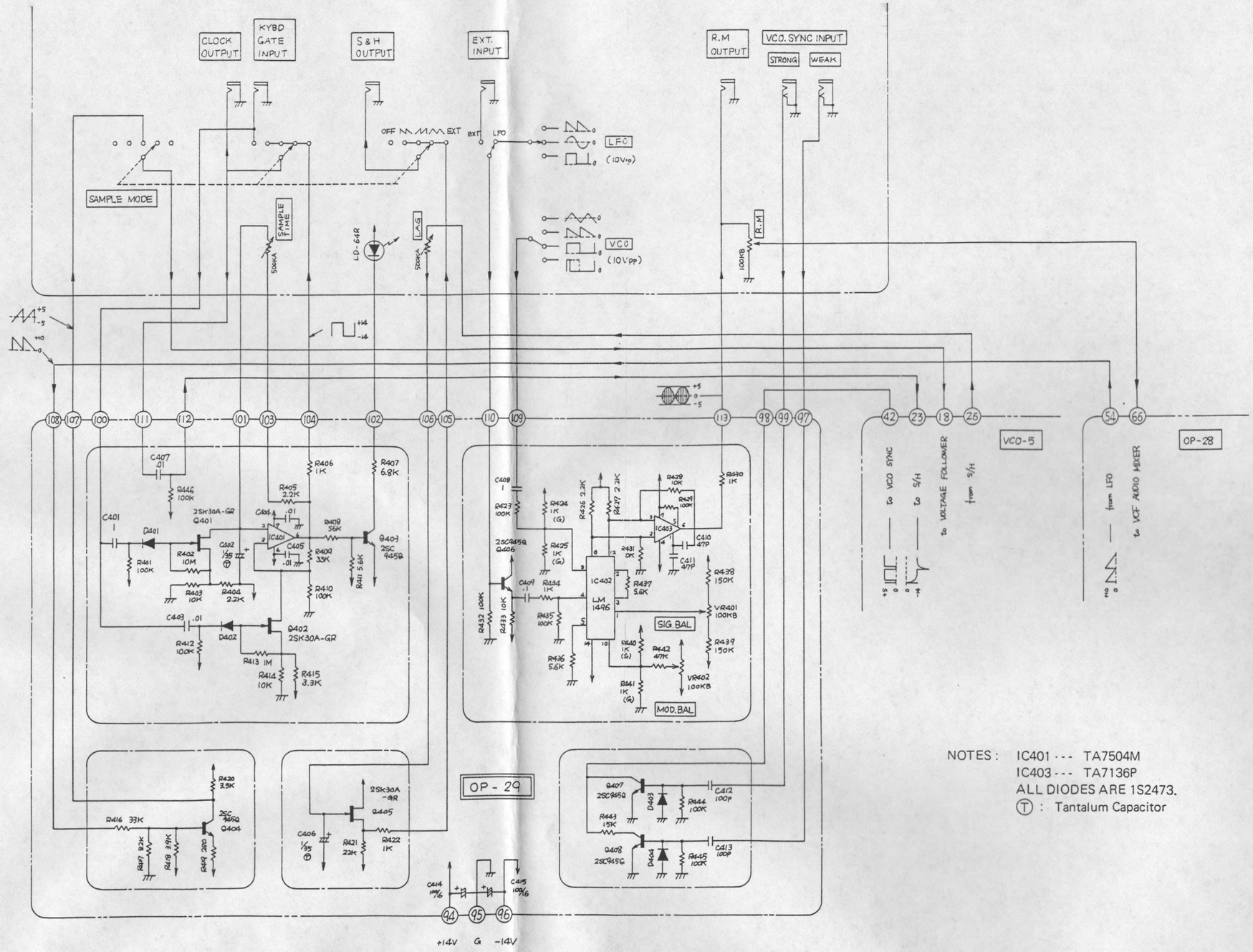

NOTES : IC401 --- TA7504M
IC403 --- TA7136P
ALL DIODES ARE 1S2473.
Ⓣ : Tantalum Capacitor

PS-22 PS-24 Power Supply Board Assy Parts Layout

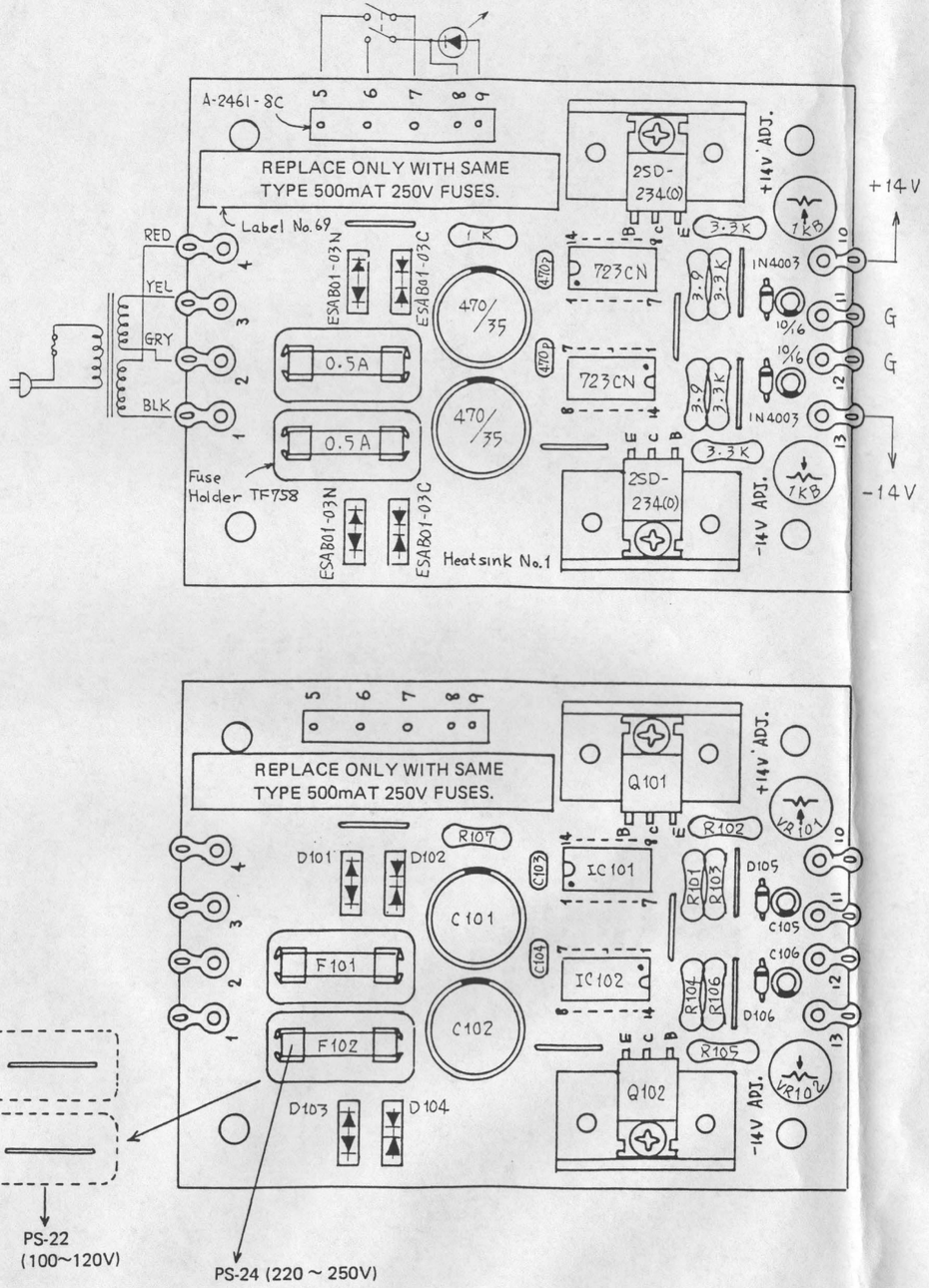

Circuit Diagram

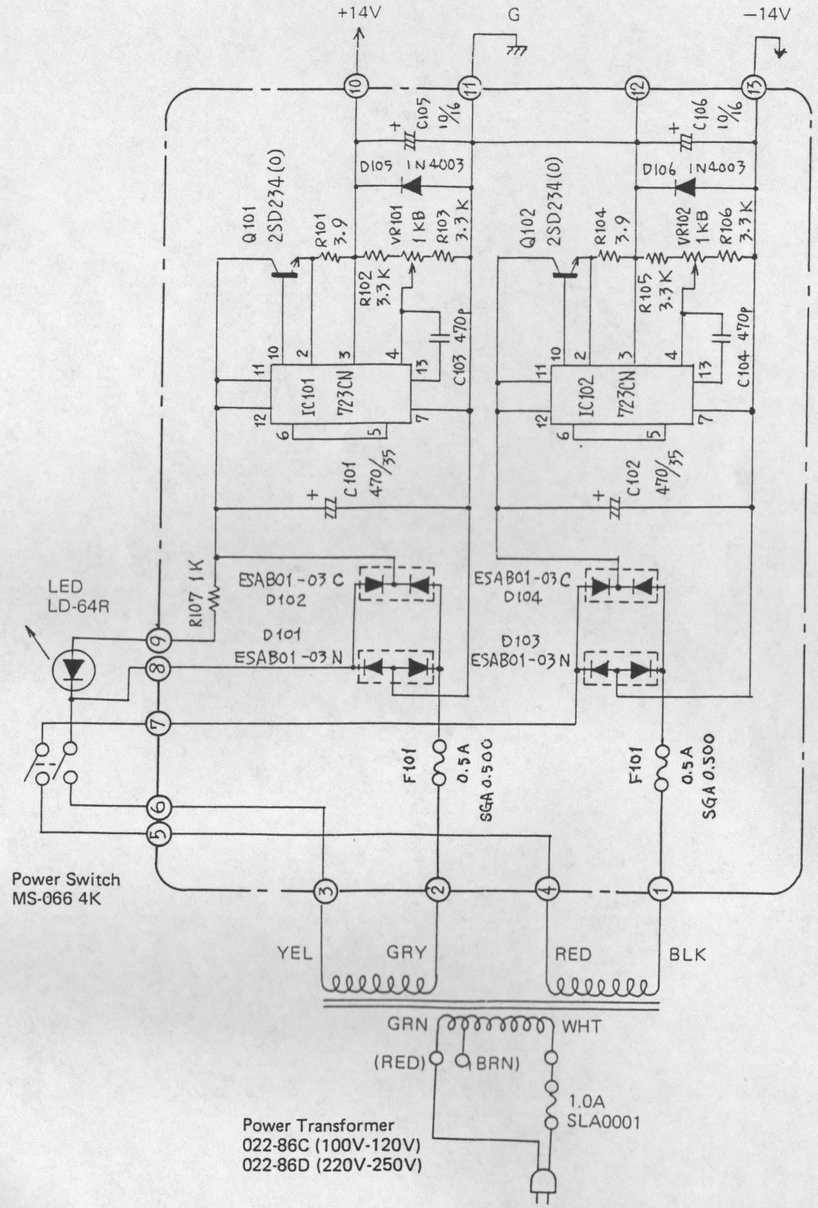

WIRING DIAGRAM

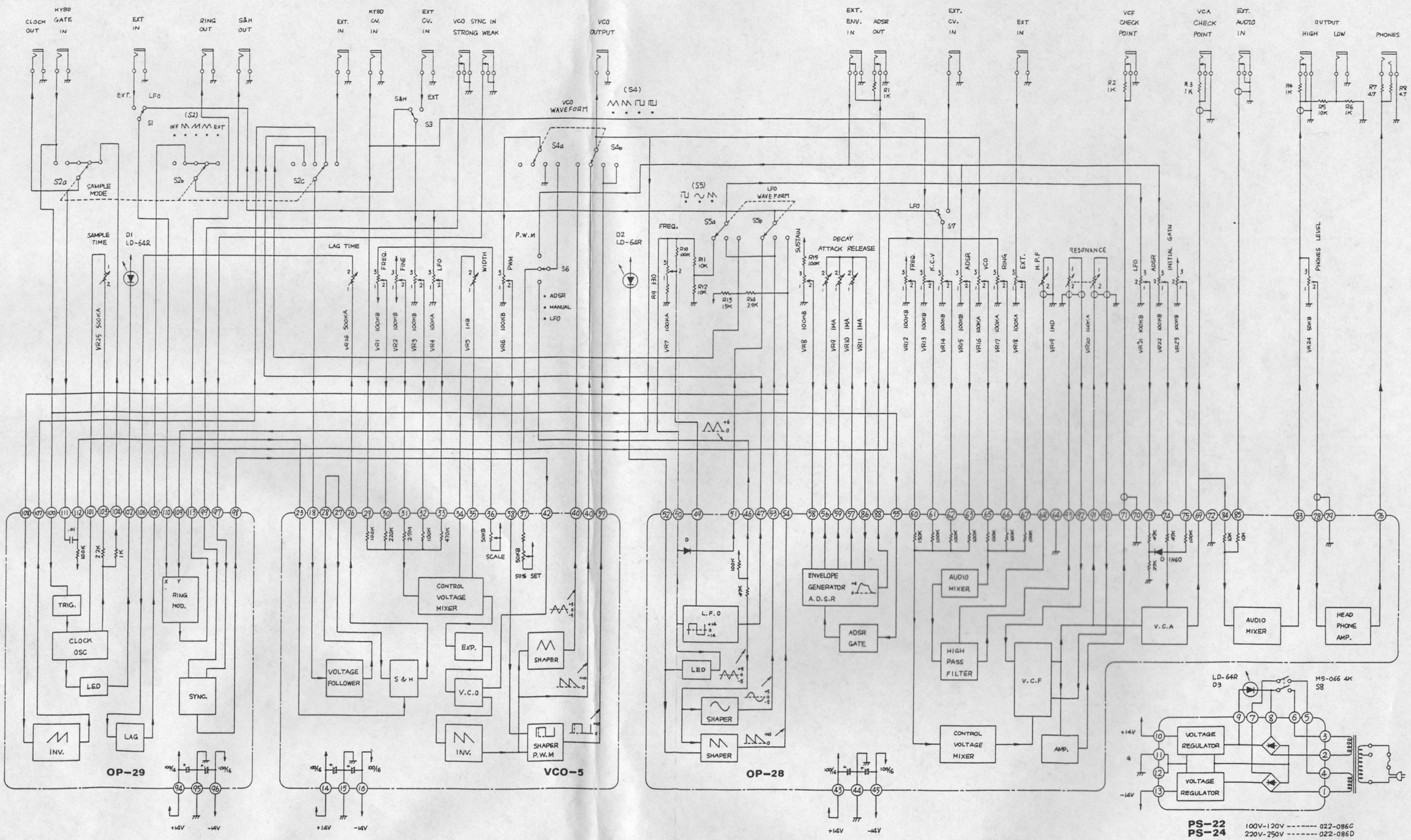

SYSTEM 100, MODEL 102 ADJUSTMENT PROCEDURES

1. **Power supply Voltage Adjustment:**

   a) Connect 2 Digital Voltmeter to Terminal "10" of the Power Circuit Board (PS-22, PS-24), and adjust VR101 (+14V ADJ.) for +14V

   b) Adjust VR102 (−14V ADJ.) for −14V at Terminal "13".

   c) Tolerance: 14V ± 100 mV.

   d) Digital Voltmeter should have:

   Resolution voltage . . . . . down to DC 10 mV or more
   Input Impedance . . . . . 1 Mohm or more

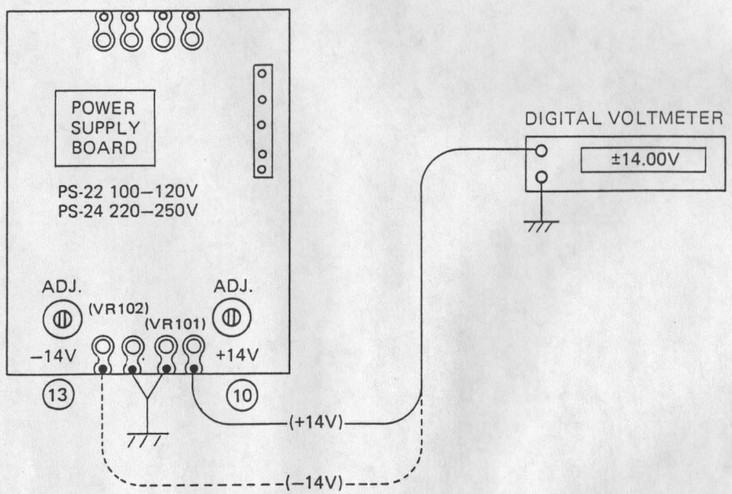

LFO Waveform Adjustment:

a) Connect the Oscilloscope to Terminal "54" of the VCF-VCA Board (OP-28), and adjust VR301 (⩘ wave ADJ.) for a Sawtooth wave.

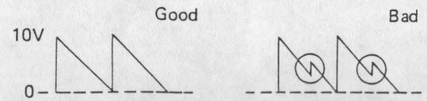

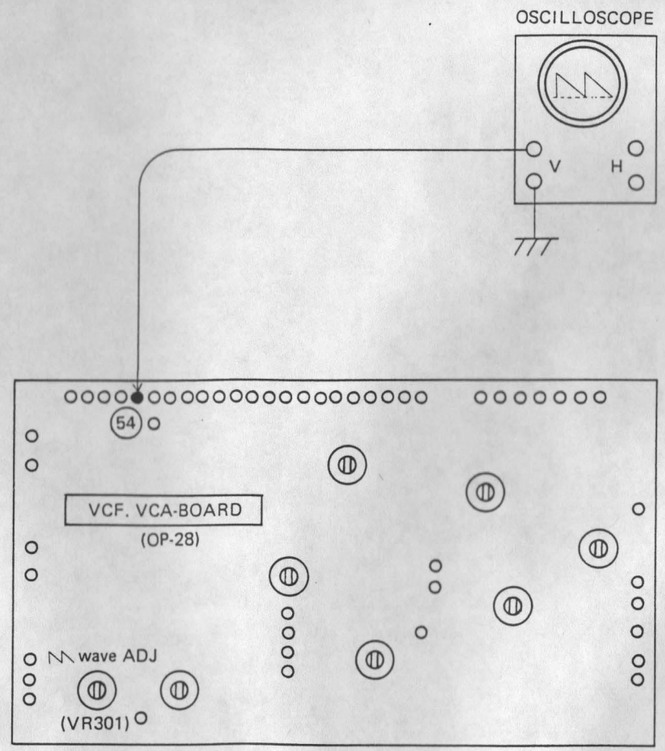

ADSR Zero Adjustment:

a) Set the controls of the Control Panel as illustrated below:

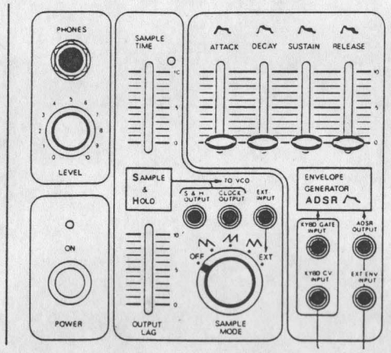

(102)

b) Connect an Oscilloscope or Digital Voltmeter to Terminal "88" or the ADSR OUTPUT JACK and adjust VR302 (ADSR Zero ADJ.) for 0V.

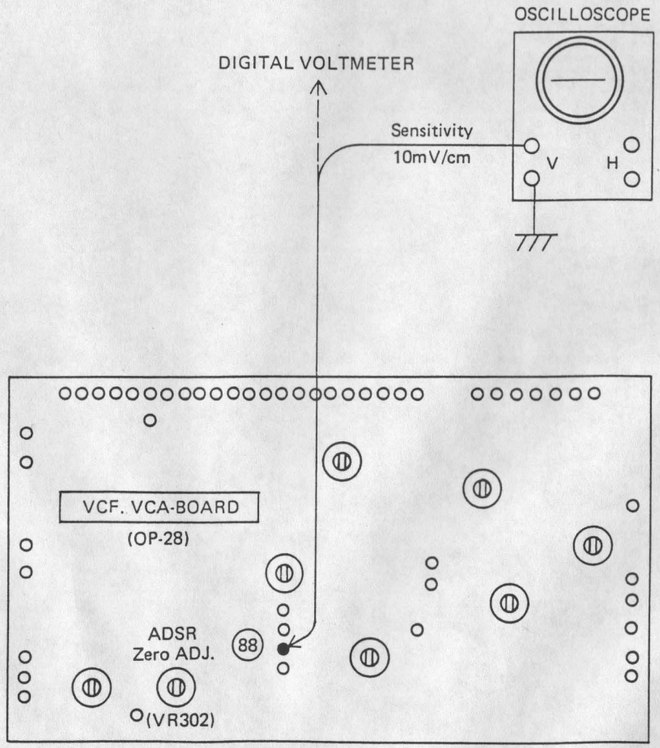

RING MOD Adjustment:

a) Set the controls of the control panel as illustrated below:

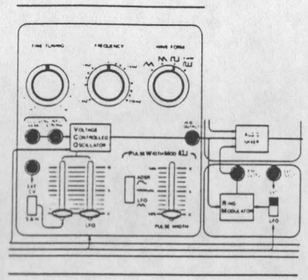

b) Connect the Oscilloscope to terminal "113" or the RING OUTPUT jack and adjust VR-401 (SIG BAL) for minimum output.

c) Allowable voltage limit; . . . . . under 100 mV

d) Reset the controls as illustrated bellow:

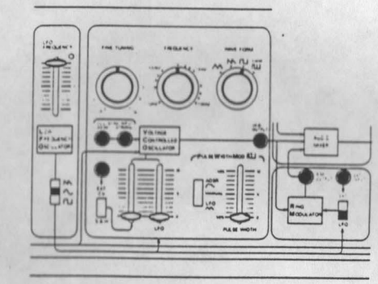

e) Adjust VR-402 (MOD BAL) for uniform waveform and amplitude.

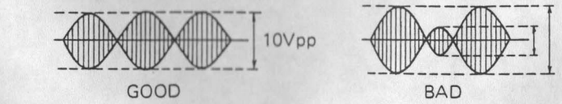

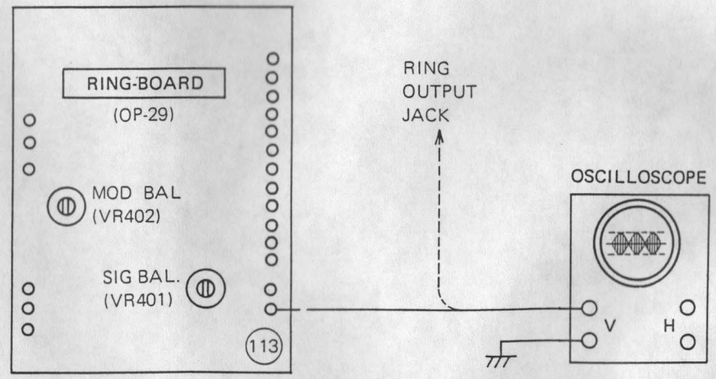

VCO ADJUSTMENT

1. Triangular (⩘) Wave Form Adjustment:

a) Set the Control Panel as shown below.

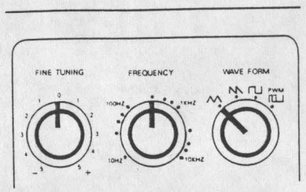

b) Connect the Oscilloscope to Terminal "40" or the VCO OUTPUT JACK, and adjust VR205 (⩘ WAVE ADJ.) for the triangular waveform.

c) Then, adjust VR206 (⩘ ZERO SET) so as to balance this output waveform on 0V.

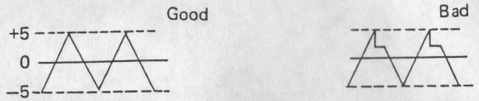

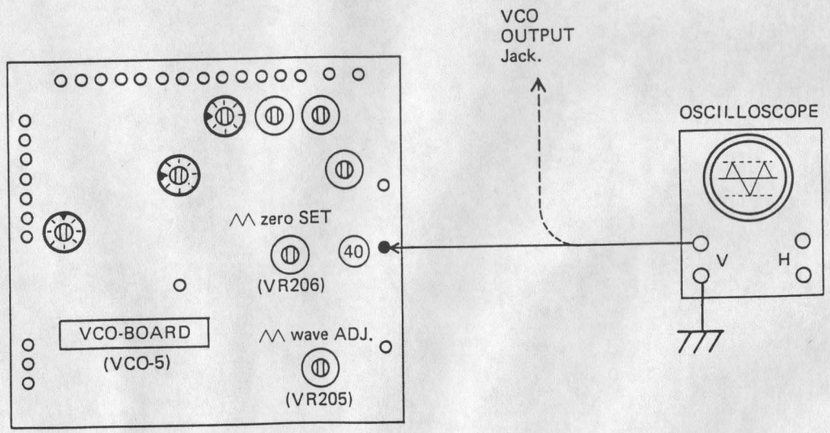

2. Square (⊓⊔) Wave Adjustment:

a) Set the Control Panel as shown below.

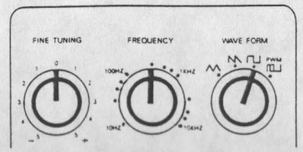

b) Connect the Oscilloscope to Terminal "39" or the VCO OUTPUT JACK on the VCO Board (VCO-5), and adjust VR207 (⊓⊔ 50% SET) for a 50% – 50% square wave.

c) Re-set the Control Panel as shown below.

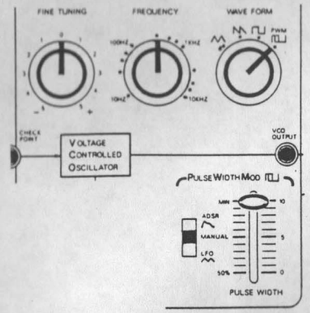

d) With the same connection as in b) above, adjust VR204 (⊓⊔ 5% SET) for a 5% – 95% square wave.

e) Check that the wave form does not disappear when the front panel FREQUENCY control is turned from 10 Hz to 10 KHz.

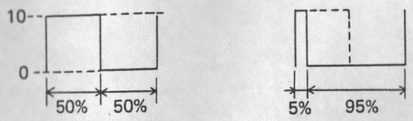

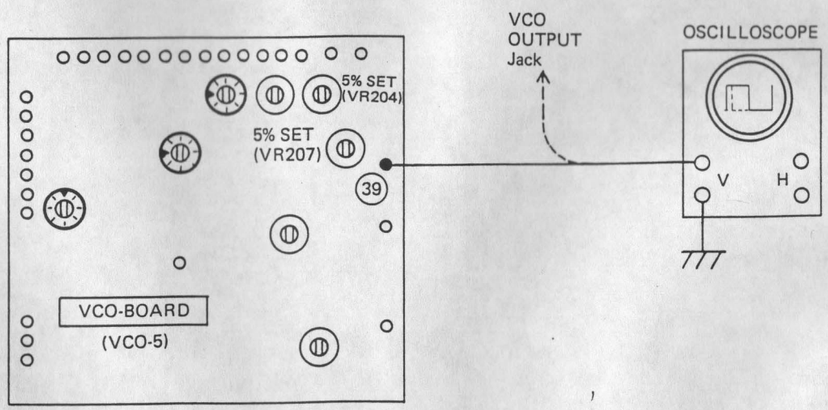

3. VCO WIDTH Adjustment:

a) Set the Control Panel as shown below.

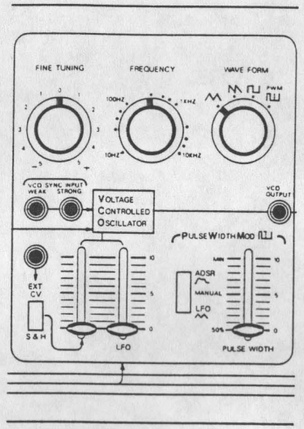

(102)

b) Connect the Oscilloscope or Frequency Counter to Terminal "40" or the VCO OUTPUT JACK, and adjust VR201 (WIDTH) so that the frequency generations on Keys F1, F2, F3, and F4, become all octave relations with each other.

c) When tuned with a Tuner, use VR202 (FREQ.) for adjustment of the frequency of Key F1.

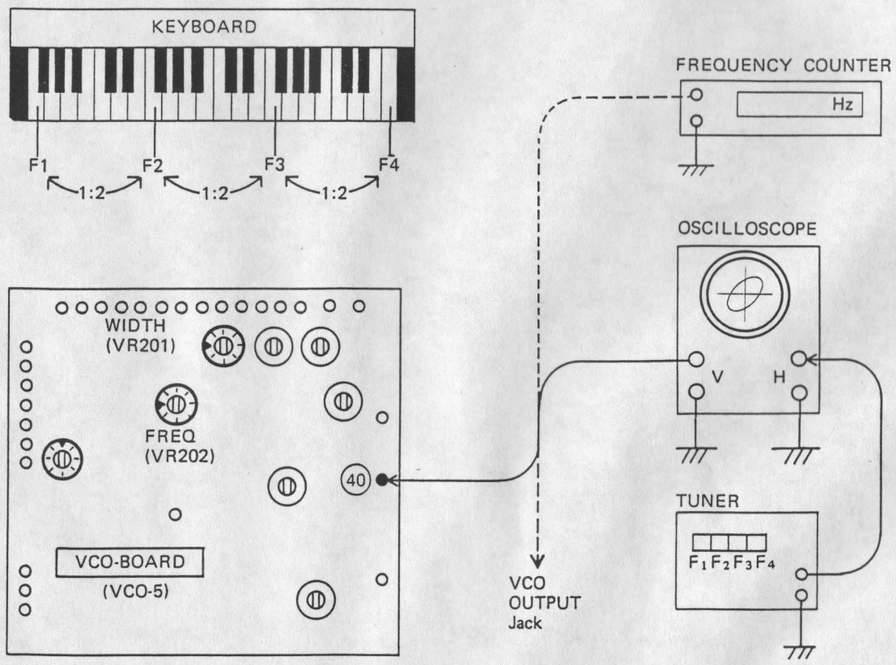

4. VCO FREQ. Adjustment:

a) Set the Control Panel as shown below.

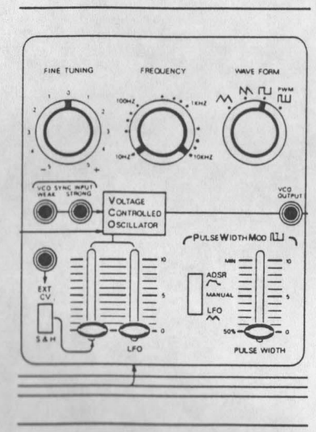

(102)

b) Connect the Oscilloscope or Frequency Counter to Terminal "39" or the VCO OUTPUT JACK. With the front panel FREQUENCY control set at "10Hz", adjust VR202 (FREQ.) so that the A2 key on the keyboard produces 10Hz (100ms).

c) In the same manner, adjust VR203 (SCALE) so as to have 10 KHz (100 μs) when the FREQUENCY control is at "10 KHz".

d) Repeat the above b) and c) until the frequency output matches the "10 Hz" and "10 KHz" indications)

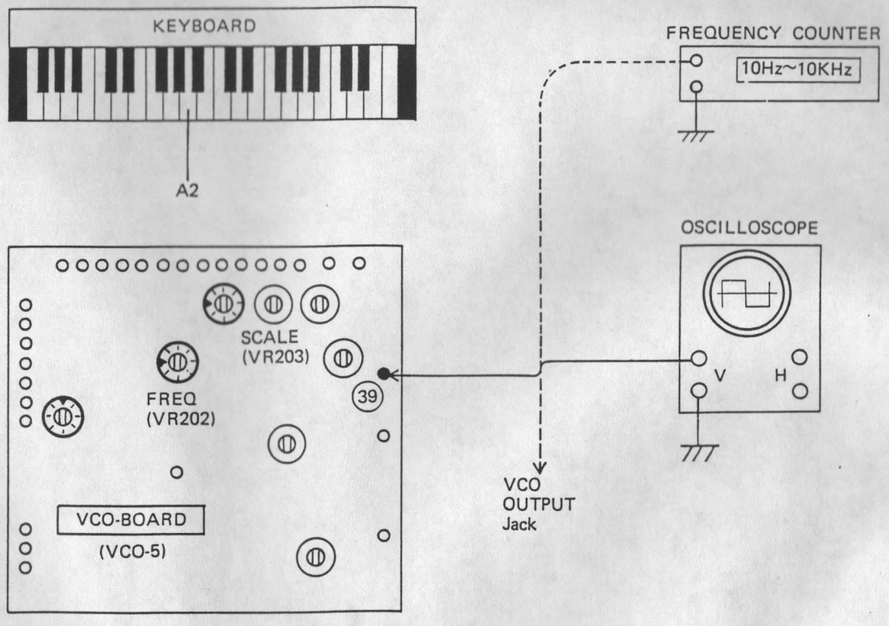

VCF ADJUSTMENT

1. VCF DC BAL Adjustment:

a) Set the Control Panel as shown below.

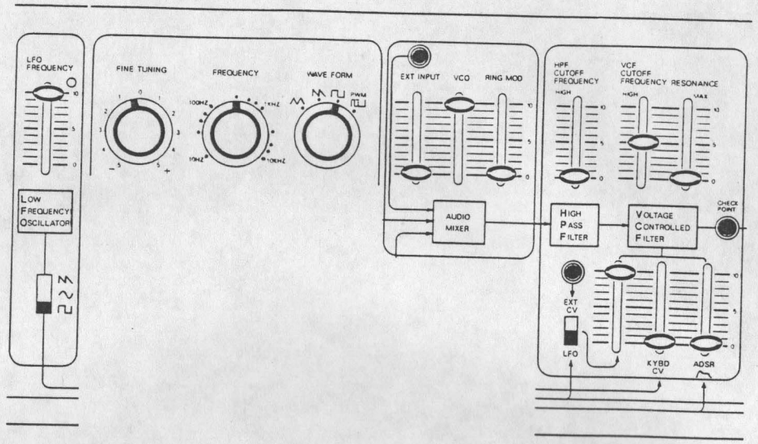

b) Connect the Oscillscope to Terminal "71" or the VCF CHECK POINT JACK on the VCF VCA Board, and adjust VR305 (VCF DC BAL) so the output waveform is symmetrical.

c) Check that waveform remains balanced when the CUTOFF-FREQ. control is moved between 10 and 0.

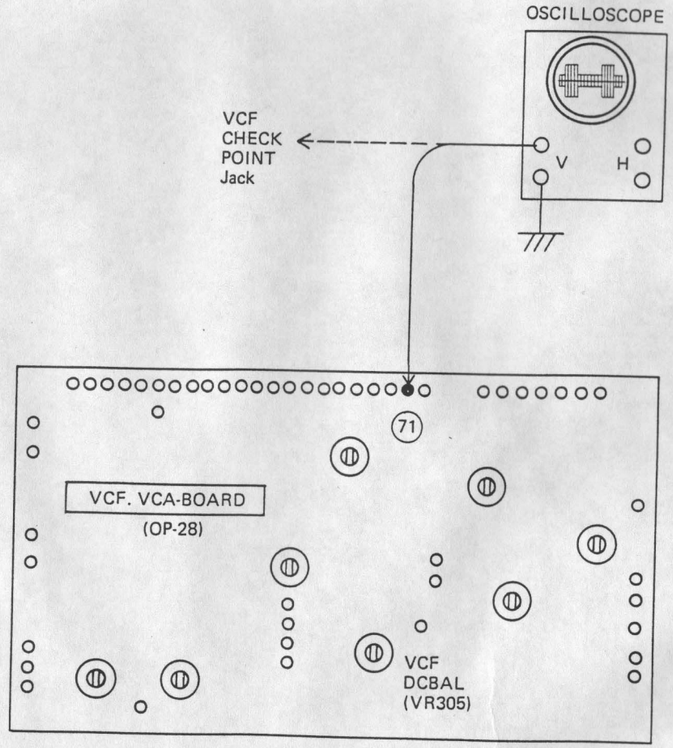

2. VCF WIDTH Adjustment:

a) Set the Control Panel as shown below.

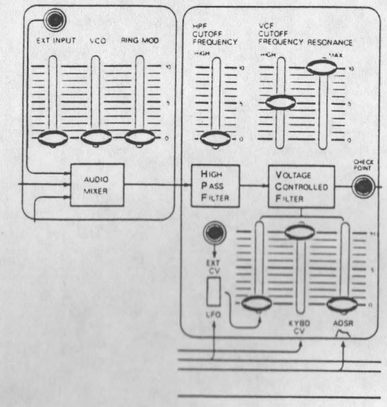

b) Connect the Oscilloscope to Terminal "71" or the VCF CHECK POINT JACK, and adjust VR304 (WIDTH) so that the frequency generations of Keys F1, F2, F3, and F4, are all in octave relationships with each other.

d) Check that such octave relations remain the same the front panel CUTOFF FREQ. control is moved between 10 and 0.

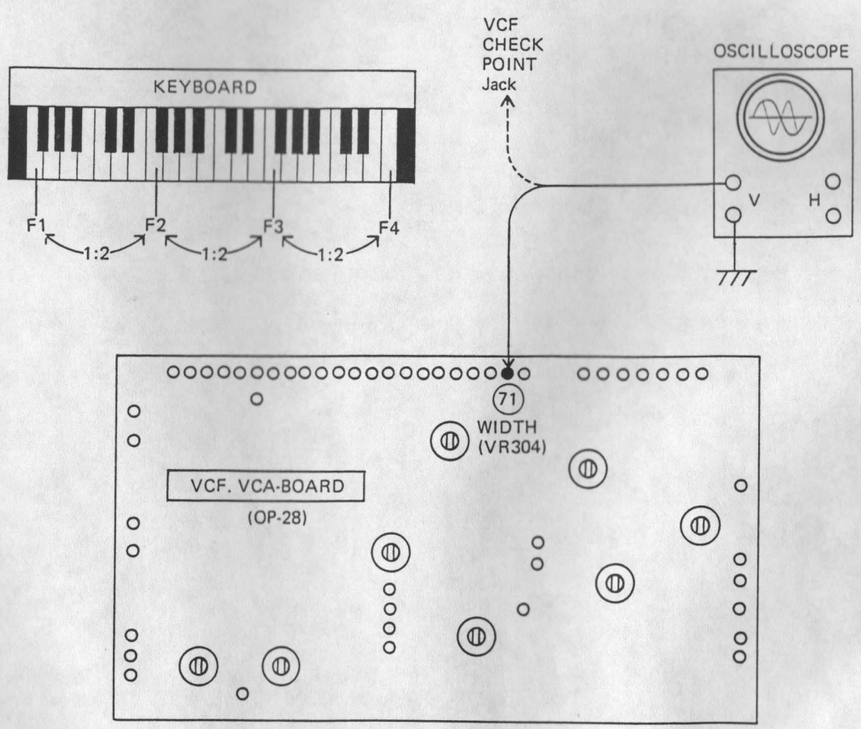

3. VCF FREQ. Adjustment:

a) Set the Control Panel as shown below.

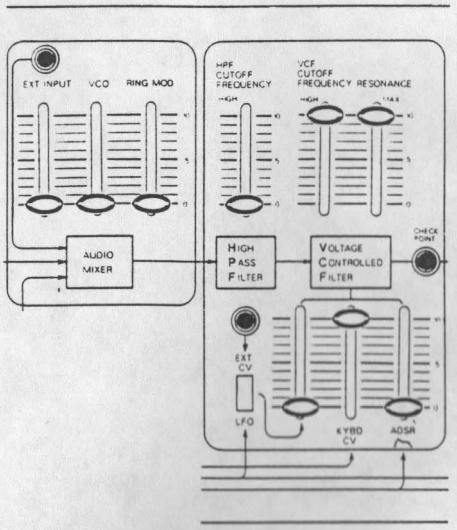

b) Connect the Oscilloscope to Terminal "71" or the VCF CHECK POINT JACK on the VCF-VCA Board (OP-28), and adjust VR303 (VCF-FREQ.) so the frequency produced by Key F1 is 20 KHz (50 μs)

c) Adjustment as above may sometimes disturb the VCF WIDTH Adjustment as done in (2) above. Repeat, therefore, both adjustments of (2) and (3) until both WIDTH and FREQ. are correct.

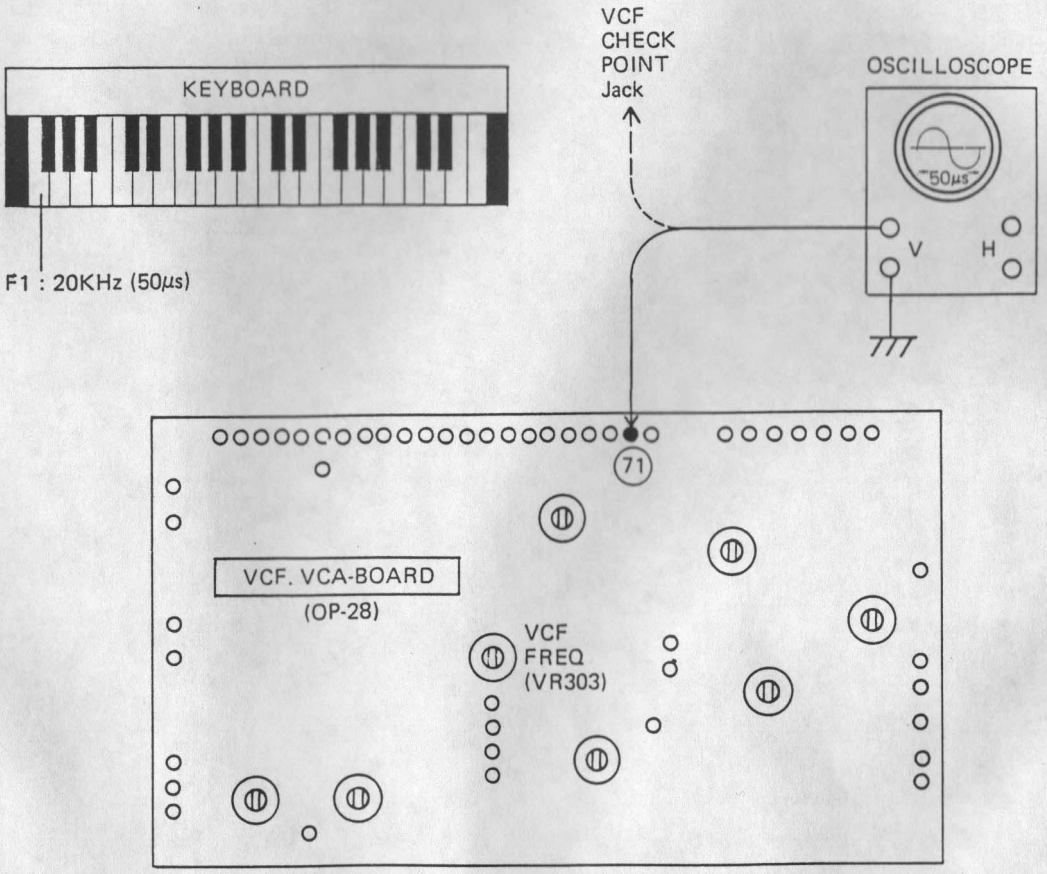

VCA ADJUSTMENT

1. VCA CUTOFF Adjustment:

a) Set the Control Panel as shown below.

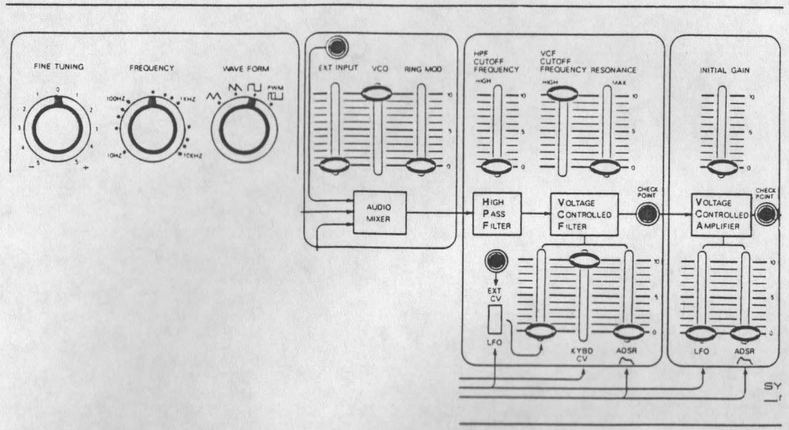

b) Connect the Oscilloscope to Terminal "69" or the VCA CHECK POINT JACK on the VCF VCA Board (OP-28), and set VR307 (VCA CUTOFF) at the point where the output wave form just dissappears.

c) Check that, when the INITIAL GAIN on the Control Panel is moved to "10", the output voltage is within 2 – 3 Vp-p.

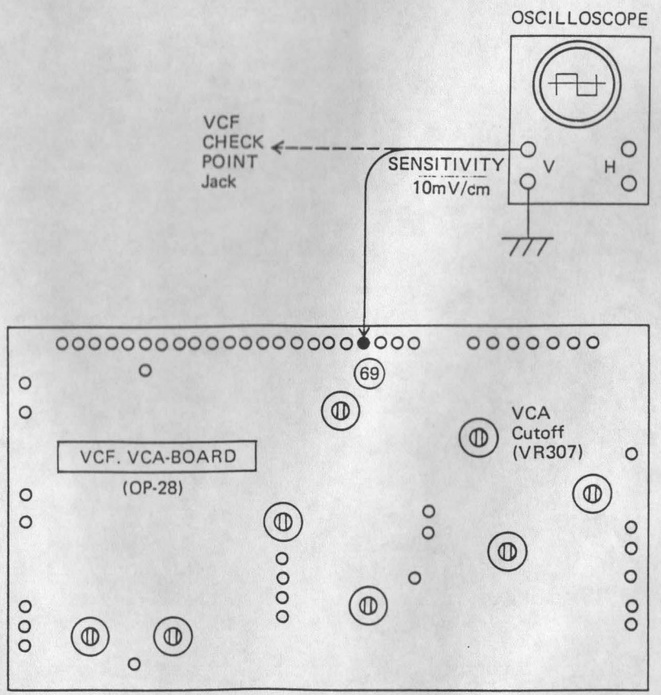

2. VCA DC BAL Adjustment:

a) Set the Control Panel as shown below.

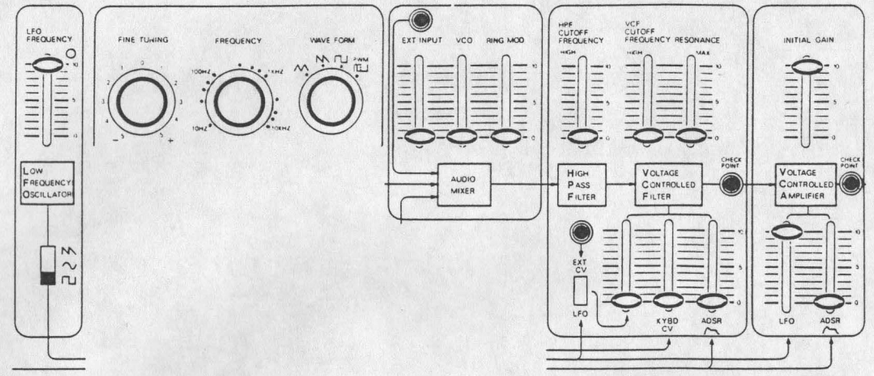

b) Connect the Oscilloscope to Terminal "69" or VCA CHECK POINT JACK on the VCF VCA Board (OP-28), and adjust VR306 (VCA DC BAL) for minimum "click" at the output.

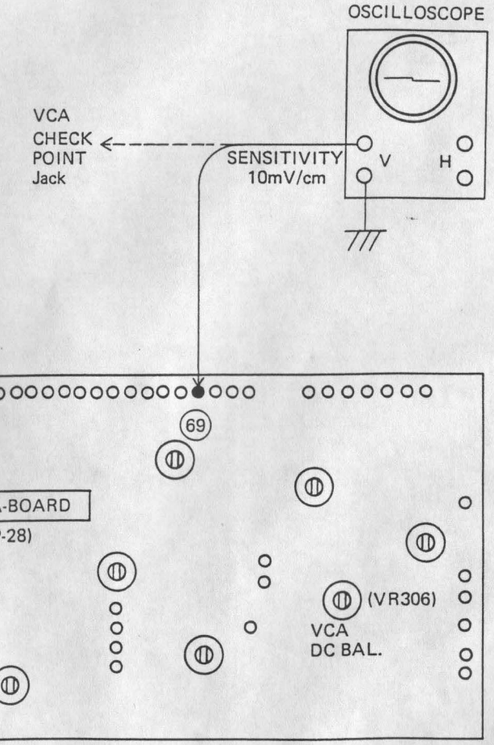

SYSTEM-100 MODEL-102 PARTS LIST

VCO-5 VCO Board Assembly (152-005)

052-134C	Printed Circuit Board No. 134C				
020-025	IC	CA3130			
020-024	IC	301AH			
020-052	IC	CA1458G			
020-010	IC	TA7504M			
020-032	IC	μA726			
017-013	Transistor	2SC945 (Q)			
017-012	Transistor	2SA733 (Q)			
017-016	FET	2SK30A (GR)			
017-036	FET	E412 (17S30546)			
018-014	Diode	1S2473			
028-006	Trimmer Potentiometer	50KΩ (B)	EVL-R4XA0054B		
028-007	Trimmer Potentiometer	100KΩ (B)	EVL-R4XA0015B		
029-108	Trimmer Potentiometer	50KΩ (B)	PNB-04C3A-503H		
029-109	Trimmer Potentiometer	100KΩ (B)	PNB-04C3A-104H		
044-025	Resistor	100Ω	1/4W	± 5%	
044-031	Resistor	330Ω	1/4W	± 5%	
044-037	Resistor	1KΩ	1/4W	± 5%	
044-041	Resistor	2.7KΩ	1/4W	± 5%	
044-042	Resistor	3.3KΩ	1/4W	± 5%	
044-047	Resistor	8.2KΩ	1/4W	± 5%	
044-048	Resistor	10KΩ	1/4W	± 5%	
044-050	Resistor	15KΩ	1/4W	± 5%	
044-052	Resistor	22KΩ	1/4W	± 5%	
044-054	Resistor	33KΩ	1/4W	± 5%	
044-055	Resistor	39KΩ	1/4W	± 5%	
044-057	Resistor	56KΩ	1/4W	± 5%	
044-058	Resistor	68KΩ	1/4W	± 5%	
044-060	Resistor	100KΩ	1/4W	± 5%	
044-082	Resistor	200KΩ	1/4W	± 5%	
044-064	Resistor	220KΩ	1/4W	± 5%	
044-066	Resistor	330KΩ	1/4W	± 5%	
044-068	Resistor	470KΩ	1/4W	± 5%	
044-072	Resistor	1MΩ	1/4W	± 5%	
044-167	Resistor	2.7MΩ	1/2W	± 10%	
044-599	Resistor	10MΩ	1/2W	± 10%	
044-829	Resistor	820Ω	CRB-1/4FX	± 10%	
044-840	Resistor	22KΩ	CRB-1/4FX	± 10%	
044-845	Resistor	82KΩ	CRB-1/4FX	± 10%	
044-846	Resistor	100KΩ	CRB-1/4FX	± 10%	
044-847	Resistor	120KΩ	CRB-1/4FX	± 10%	
037-001	Capacitor	10pF	50V	± 10%	Ceramic
037-006	Capacitor	100pF	50V	± 10%	Ceramic
035-005	Capacitor	0.001μF	50V	± 10%	Mylar
035-016	Capacitor	0.01μF	50V	± 10%	Mylar
035-026	Capacitor	0.068μF	50V	± 10%	Mylar
035-028	Capacitor	0.1μF	50V	± 10%	Mylar
035-137	Capacitor	1000pF	100V	± 10%	Polystyrene
032-033	Capacitor	10μF	16V	±	Electrolytic
032-037	Capacitor	100μF	16V	±	Electrolytic

OP-28 VCF-VCA Board Assembly (149-028)

05 052-135A	Printed Circuit Board No. 135A				
020-052	IC	CA1458G			
020-015	IC	CA3080	Selected VCA		
020-010	IC	TA7504M			
020-027	IC	TA7136P			
020-021	IC	ITS1276			
017-013	Transistor	2SC945 (Q)			
017-047	Transistor	2SC945 (Q)	Selected VCF		
017-003	Transistor	2SC1000 (GR)			
017-048	Transistor	2SC1000 (GR)	Selected hfe		
017-012	Transistor	2SA733 (Q)			
017-014	FET	2SK30A (Y)			
017-018	PUT	N13T1			
018-014	Diode	1S2473			
018-027	Diode	1N60			
022-077	Output Transformer	ST-31			
028-002	Trimmer Potentiometer	1KΩ (B)	EVL-R4XA0013B		
028-004	Trimmer Potentiometer	10KΩ (B)	EVL-R4XA0014B		
028-007	Trimmer Potentiometer	100KΩ (B)	EVL-R4XA0015B		
044-025	Resistor	100Ω	1/4W	± 5%	
044-027	Resistor	150Ω	1/4W	± 5%	
044-035	Resistor	680Ω	1/4W	± 5%	
044-037	Resistor	1KΩ	1/4W	± 5%	
044-038	Resistor	1.5KΩ	1/4W	± 5%	
044-039	Resistor	1.8KΩ	1/4W	± 5%	
044-040	Resistor	2.2KΩ	1/4W	± 5%	
044-042	Resistor	3.3KΩ	1/4W	± 5%	
044-044	Resistor	4.7KΩ	1/4W	± 5%	
044-045	Resistor	5.6KΩ	1/4W	± 5%	
044-046	Resistor	6.8KΩ	1/4W	± 5%	
044-048	Resistor	10KΩ	1/4W	± 5%	
044-050	Resistor	15KΩ	1/4W	± 5%	
044-052	Resistor	22KΩ	1/4W	± 5%	
044-053	Resistor	27KΩ	1/4W	± 5%	
044-054	Resistor	33KΩ	1/4W	± 5%	
044-056	Resistor	47KΩ	1/4W	± 5%	
044-057	Resistor	56KΩ	1/4W	± 5%	
044-059	Resistor	82KΩ	1/4W	± 5%	
044-060	Resistor	100KΩ	1/4W	± 5%	
044-062	Resistor	150KΩ	1/4W	± 5%	
044-064	Resistor	220KΩ	1/4W	± 5%	
044-065	Resistor	270KΩ	1/4W	± 5%	
044-068	Resistor	470KΩ	1/4W	± 5%	
044-072	Resistor	1MΩ	1/4W	± 5%	
044-166	Resistor	2.2MΩ	1/2W	± 10%	
037-002	Capacitor	15pF	50V	± 10%	Ceramic
037-005	Capacitor	47pF	50V	± 10%	Ceramic
037-007	Capacitor	250pF	50V	± 10%	Mylar
035-001	Capacitor	0.001μF	50V	± 10%	Mylar
035-016	Capacitor	0.01μF	50V	± 10%	Mylar
035-018	Capacitor	0.015μF	50V	± 10%	Mylar
035-026	Capacitor	0.068μF	50V	± 10%	Mylar
035-028	Capacitor	0.1μF	50V	± 10%	Mylar

032-099	Capacitor	1μF	35V	±10%	Tantalum
032-107	Capacitor	3.3μF	25V	±10%	Tantalum
032-071	Capacitor	1μF	50V		Electrolytic
032-033	Capacitor	10μF	16V		Electrolytic
032-036	Capacitor	47μF	16V		Electrolytic
032-037	Capacitor	10μF	16V		Non Polarized

OP-29 Ring Board Assembly (149-029)

052-136A	Printed Circuit Board No. 136A				
020-026	IC	LM1496			
020-010	IC	TA7504M			
020-027	IC	TA7136P			
017-013	Transistor	2SC945 (Q)			
017-014	FET	2SK30A (GR)			
018-014	Diode	1S2473			
028-007	Trimmer Potentiometer	100KΩ (B)	EVL-R4XA0015B		
044-030	Resistor	270Ω	1/4W	±5%	
044-037	Resistor	1KΩ	1/4W	±5%	
044-040	Resistor	2.2KΩ	1/4W	±5%	
044-042	Resistor	3.3KΩ	1/4W	±5%	
044-043	Resistor	3.9KΩ	1/4W	±5%	
044-045	Resistor	5.6KΩ	1/4W	±5%	
044-046	Resistor	6.8KΩ	1/4W	±5%	
044-048	Resistor	10KΩ	1/4W	±5%	
044-049	Resistor	15KΩ	1/4W	±5%	
044-052	Resistor	22KΩ	1/4W	±5%	
044-054	Resistor	33KΩ	1/4W	±5%	
044-056	Resistor	47KΩ	1/4W	±5%	
044-057	Resistor	56KΩ	1/4W	±5%	
044-059	Resistor	82KΩ	1/4W	±5%	
044-060	Resistor	100KΩ	1/4W	±5%	
044-062	Resistor	150KΩ	1/4W	±5%	
044-072	Resistor	1MΩ	1/4W	±5%	
044-737	Resistor	1KΩ	1/4W	±2%	
044-599	Resistor	10MΩ	1/2W	±10%	
037-005	Capacitor	47pF	50V	±10%	Ceramic
037-006	Capacitor	100pF	50V	±10%	Ceramic
035-016	Capacitor	0.01μF	50V	±10%	Mylar
035-028	Capacitor	0.1μF	50V	±10%	Mylar
032-099	Capacitor	1μF	35V	±10%	Tantalum

PS-22 Power Supply Board Assembly (146-022) 100V-120V
PS-24 Power Supply Board Assembly (146-024) 220V-250V

052-133B	Printed Circuit Board No. 133B	
048-001	Heatsink	No.1
020-031	IC	723CN
017-010	Transistor	2SD234 (O)
018-028	Diode	ESA-B01-03C
018-029	Diode	ESA-B01-03N
018-022	Diode	1N4003

028-002	Trimmer Potentiometer		1KΩ (B)		EVL-R4XA0013B
044-008	Resistor	3.9Ω	1/4W	± 5%	
044-037	Resistor	1KΩ	1/4W	± 5%	
044-042	Resistor	3.3KΩ	1/4W	± 5%	
037-008	Capacitor	470pF	50V	± 10%	Ceramic
032-033	Capacitor	10μF	16V	± 10%	Electrolytic
032-068	Capacitor	470μF	35V		Electrolytic
010-038	Wafer Terminal	A-2461-8C			

PS-24 Only

012-003	Fuse Holder	TF-758		
008-024	Fuse (Midget)	0.5A	SGA 0.500	
076-069	Label No.69			

Control Panel Assembly

010-010	Housing Receptacle		A-2139-8	
042-015	Pin Terminal		2578T	
044-009	Resistor	4.7Ω	1/4W	± 5%
044-031	Resistor	330Ω	1/4W	± 5%
044-037	Resistor	1KΩ	1/4W	± 5%
044-043	Resistor	3.9KΩ	1/4W	± 5%
044-048	Resistor	10KΩ	1/4W	± 5%
044-050	Resistor	15KΩ	1/4W	± 5%
044-060	Resistor	100KΩ	1/4W	± 5%

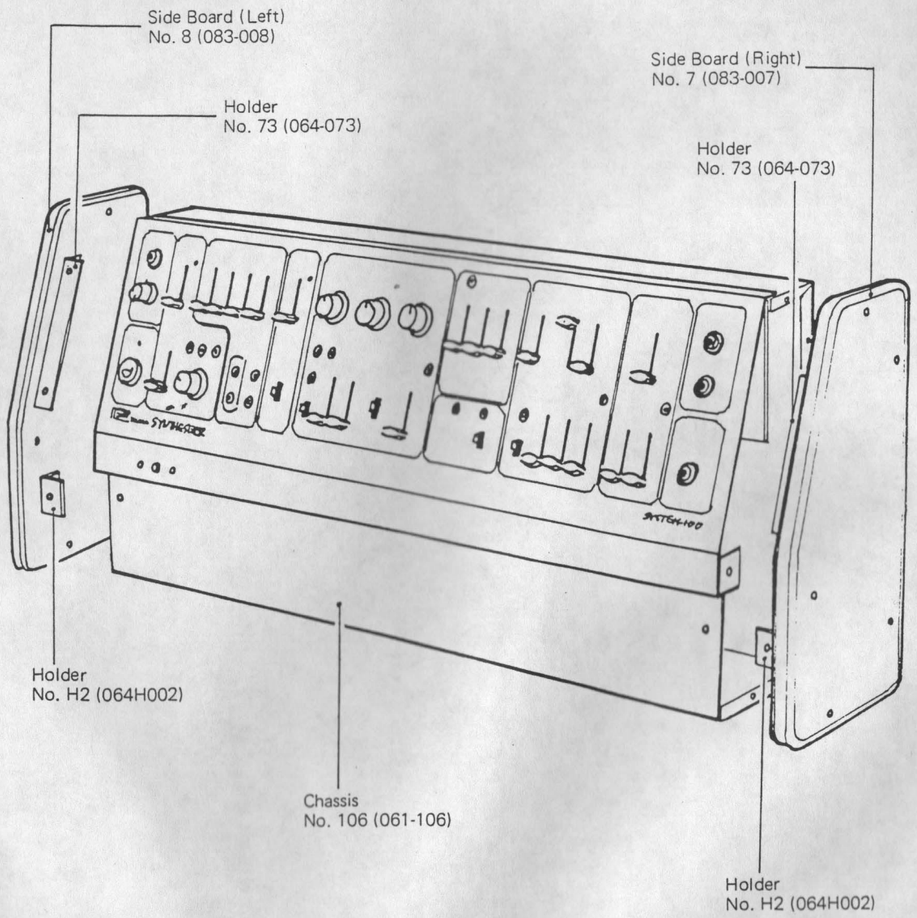

1976-10-30 SYSTEM100-102

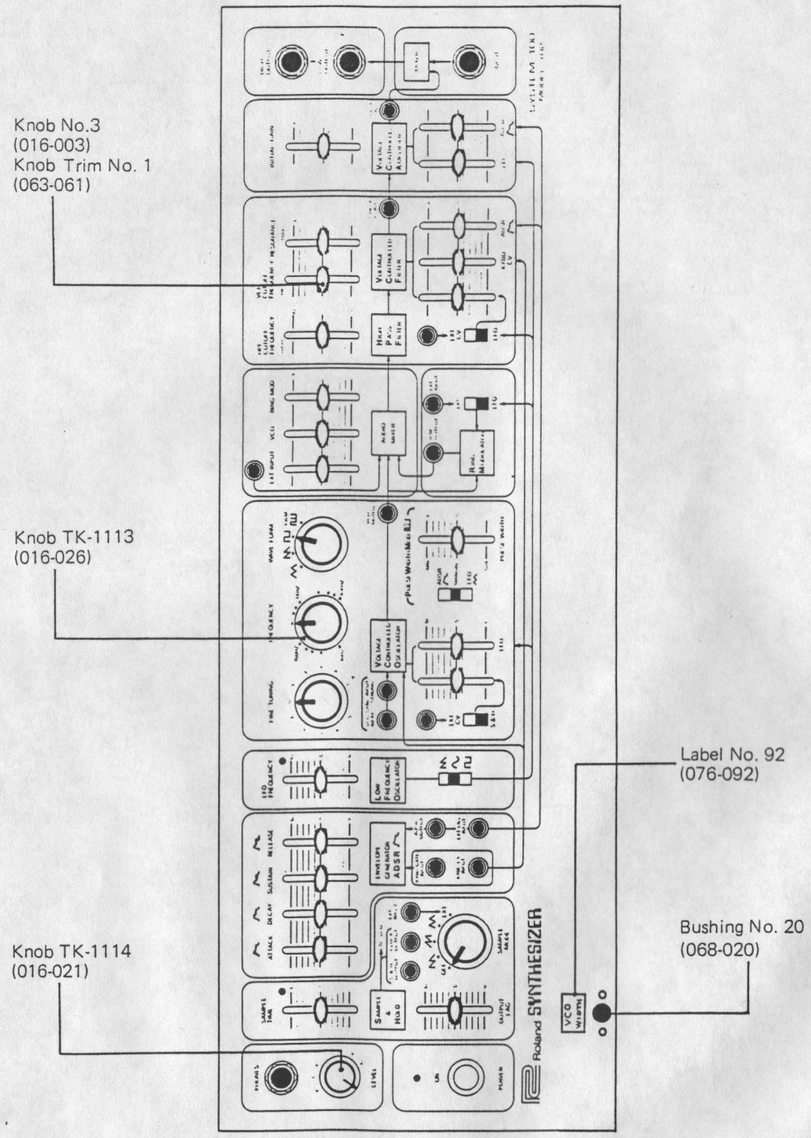

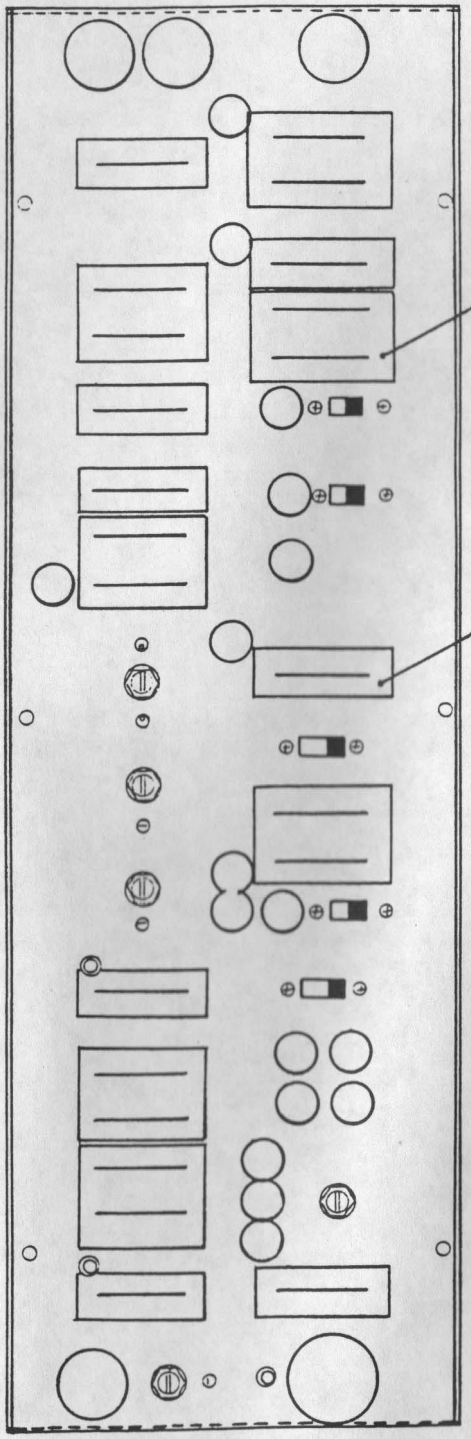
Cover No. 67
(065-067)
Cover No. 66
(065-066)

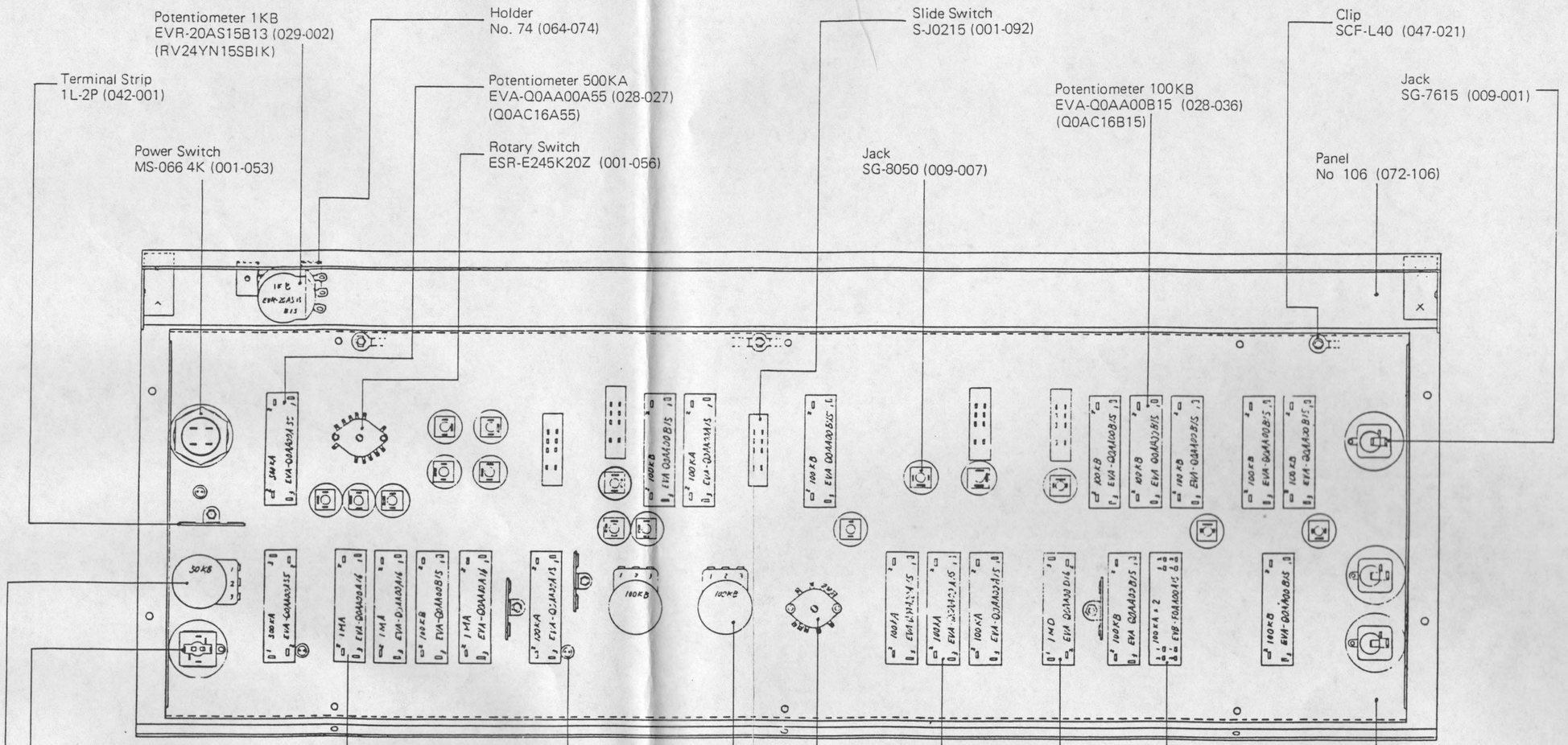
Potentiometer 1KB
EVR-20AS15B13 (029-002)
(RV24YN15SBIK)
Terminal Strip
1L-2P (042-001)
Power Switch
MS-066 4K (001-053)
Holder
No. 74 (064-074)
Potentiometer 500KA
EVA-Q0AA00A55 (028-027)
(Q0AC16A55)
Rotary Switch
ESR-E245K20Z (001-056)
Slide Switch
S-J0215 (001-092)
Jack
SG-8050 (009-007)
Potentiometer 100KB
EVA-Q0AA00B15 (028-036)
(Q0AC16B15)
Clip
SCF-L40 (047-021)
Jack
SG-7615 (009-001)
Panel
No 106 (072-106)
Potentiometer 1MA
EVA-Q0AA00A16 (028-028)
(Q0AC16A16)
Jack
LJ-039-1-6 (009-002)
Potentiometer 50KB
V24L5N15KC-B50KΩ (030-054)
(EVC B0AK15B54)
Bushing No. 20
(068-020)
Light Emitting Diode
LD-64R (019-004)
Potentiometer 100KB
V24L5N20KC-B100KΩ (030-055)
(EVC B0AK20B15)
Potentiometer 1MD
EVA-Q0AA0D16 (029-097)
(Q0AC16D16)
Potentiometer 100KA
EVA-Q0AA0A15 (028-025)
(Q0AC16A15)
Rotary Switch
ESR-E124K20Z (001-055)
Chassis
No. 104 (061-104)
Potentiometer 100KA x 2
EVB-F0A A00A15 (029-168)

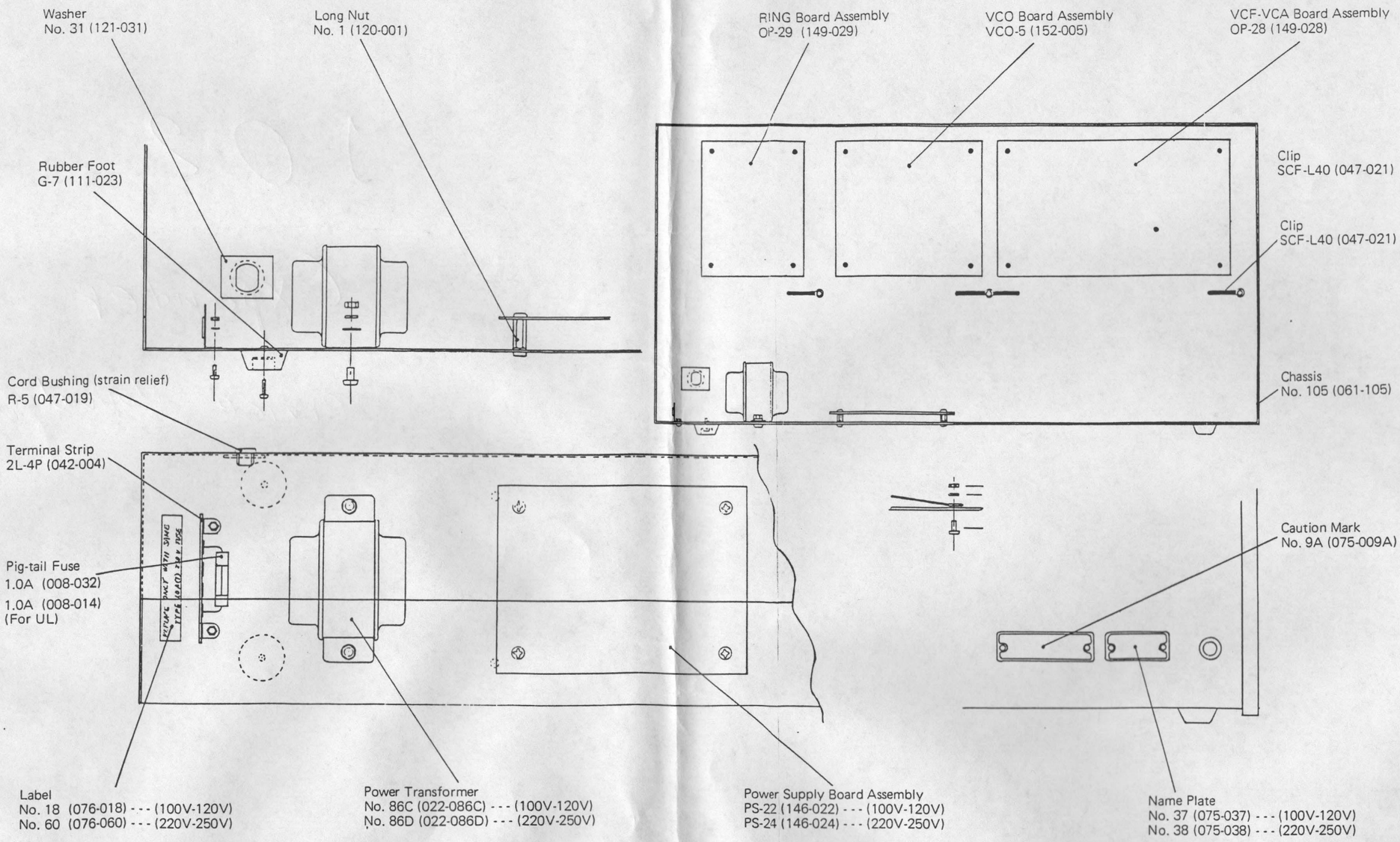
Washer
No. 31 (121-031)
Long Nut
No. 1 (120-001)
Rubber Foot
G-7 (111-023)
Cord Bushing (strain relief)
R-5 (047-019)
Terminal Strip
2L-4P (042-004)
Pig-tail Fuse
1.0A (008-032)
1.0A (008-014)
(For UL)
Label
No. 18 (076-018) - - - (100V-120V)
No. 60 (076-060) - - - (220V-250V)
Power Transformer
No. 86C (022-086C) - - - (100V-120V)
No. 86D (022-086D) - - - (220V-250V)
RING Board Assembly
OP-29 (149-029)
VCO Board Assembly
VCO-5 (152-005)
VCF-VCA Board Assembly
OP-28 (149-028)
Clip
SCF-L40 (047-021)
Clip
SCF-L40 (047-021)
Chassis
No. 105 (061-105)
Power Supply Board Assembly
PS-22 (146-022) - - - (100V-120V)
PS-24 (146-024) - - - (220V-250V)
Caution Mark
No. 9A (075-009A)
Name Plate
No. 37 (075-037) - - - (100V-120V)
No. 38 (075-038) - - - (220V-250V)