Syncussion-1

SERVICE MANUAL

FIRST EDITION

'80

by Pearl Japan

Pearl®

PEARL MUSICAL INSTRUMENT CO.

I N D E X

1. SPECIFICATIONS ——— 3

2. GENERAL PRECAUTIONS ——— 4

3. CIRCUIT OPERATION ——— 4～7

4. DISASSEMBLING
   - 4-1 CONTROL BOARD (SY-1) ——— 8
   - 4-2 DRUM UNIT (CU-1) ——— 9

5. PARTS LAYOUT
   - 5-1 SY-1M ——— 10
   - 5-2 SY-1S ——— 11
   - 5-3 SY-1J ——— 12

6. BLOCK DIAGRAM ——— 13

7. CIRCUIT DIAGRAM ——— 14

8. BASING DIAGRAM ——— 15

9. ADJUSTMENT PROCEDURE
   - 9-1 OSCILLATOR ADJUSTMENT ——— 16～19
   - 9-2 NOISE LEVEL ADJUSTMENT ——— 16～19

10. PARTS LIST ——— 19～20

11. ALTERED PARTS ——— 21

12. TROUBLE SHOOTING ——— 21

1. SPECIFICATIONS

* CONTROL BOARD (SY-1)

Input Sensitivity	200mV (Minus Peak)
Output Level	1Vp-p
Output Impedance	10kΩ
Power Supply	DC12V 300mA
Controls	OSC.MODE, TUNE, DECAY
	WIDTH, SWEEP (UP, OFF
	DOWN, SPEED, RANGE)
	L.F.O (⊓, OFF, ∿. SPEED, RANGE)
	S/H, OUTPUT, SENSE(CH.1, CH.2)
Input Jack	2
Foot Control Pedals	TUNE PEDAL (Option)
	MUTE PEDAL (Option)
Dimentions	320(W) x 95(H) x 200(D) m/m
Weight	2.5kg
Accessories	AC-ADAPTER, CONNECTION CORD x 3
	CARRYING CASE
Stand	N-1 Original Stand
Foot Control Jack	TUNE,MUTE

* DRUM UNIT (CU-1)

Wood Shell	8" x 4½"
Drum Head	Original Syncussion Head
Stand	773 Pearl Concert-Tom Stand
Colour	Black or White

2. GENERAL PRECATIONS

* When removing the chassis from the wooden cabinet, excersise suffieient care to avoid impairing the cabinet.

* When clearing the wooden cabinet and control panel surfaces, use a soft, dry cloth.
Never use paint thinners.

* Protect the instrument from excessive vibration or impact.

* Avoid installing the instrument in a place where it will be exposed to direct sunlight or subject to temperature and humidity extremes.

* Be sure to use supplied AC adaptor may result in malfunction or damege to the instrument.

* Connect the instrument at an AC outlet supplying the proper voltage.

3. CIRCUIT OPERATION

Voltage Controlled Oscillator (V.C.O)

The V. C. O. consists of a mirror integrator, comparator, current transfer switch, anti-logarithmic amplifier, and biasing circuit (Figure 1). The current transfer switch and anti-logarithmic amplifier are incorporated in the feedback loop of oscillator (comprised of the mirror integrator and comparator) to control the oscillation frequency according to the in and out current (I_M) to the Mirror integrator. The current transfer switch controls the current of the anti-logarithmic amplifier according to the comparator output. The bias circuit senses the threshold voltage of an inverter (integrated on a signal CMOS inverter chip) to provide proper bias voltage.

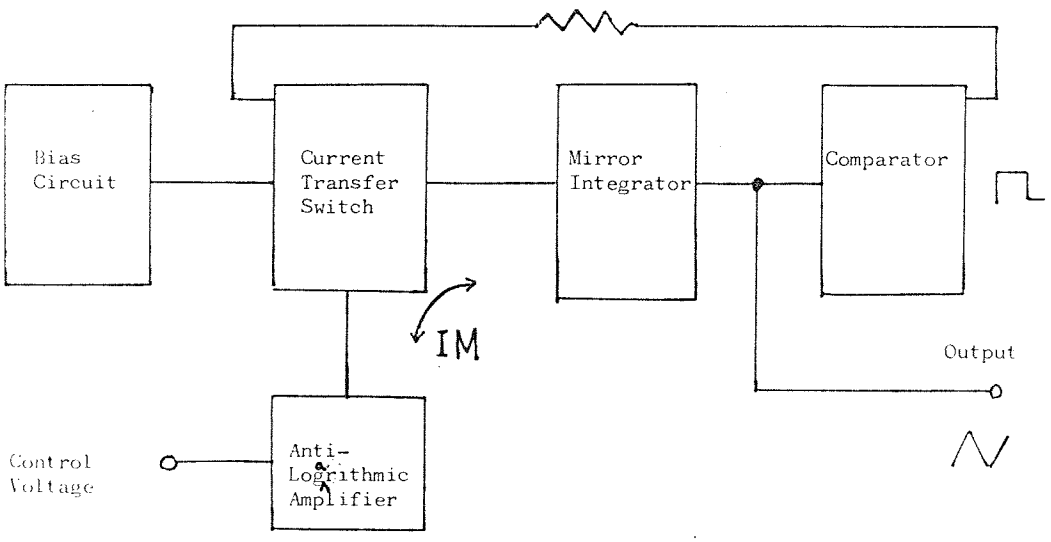

(Figure 1)

Voltage Control Filter (V. C. F.)

The V. C. F. consists of secondary low-pass filters (utilizing CMOS inverters and constaining two tandem primary low-pass filters), multipliers, anti-logarithmic amplifiers, and a bias circuit (Figure 2).

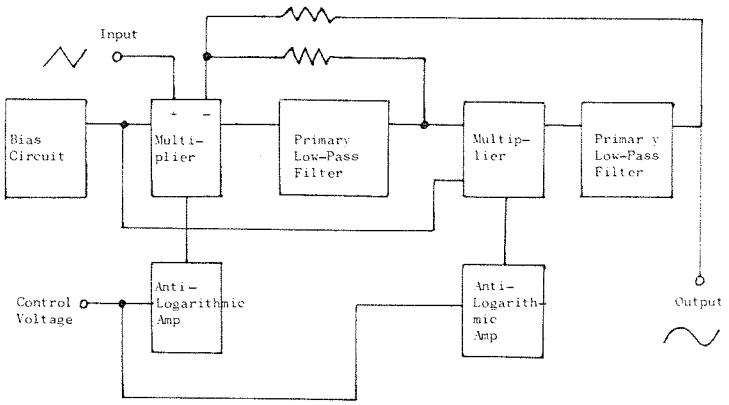

(Figure 2)

The cut-off frequency of the V. C. F. is controlled by a current control circuit comprised of the multiplier and anti-logarithmic amplifier. The input control voltage is coupled to the ant-logarithmic amplifier where it is converted into an expotential current output. The output of the anto-logarithmic amplifier then goes to the multiplier, where it is stepped up with the low-pass filter output.
The input control voltage can be regulated by the TUNE and WIDTH controls. In mode "E", the cut -off frequency of the V. C. F. is raised to a higher frequency.

Voltage Controlled Amplifier (V. C. A.)

The V. C. A. consists of a multiplier (comprised of a dual transistor, operational amplifier) and current mirror circuit. (Figure 3). The output of the V. C. A. contains the input signal multiplied by the control voltage.

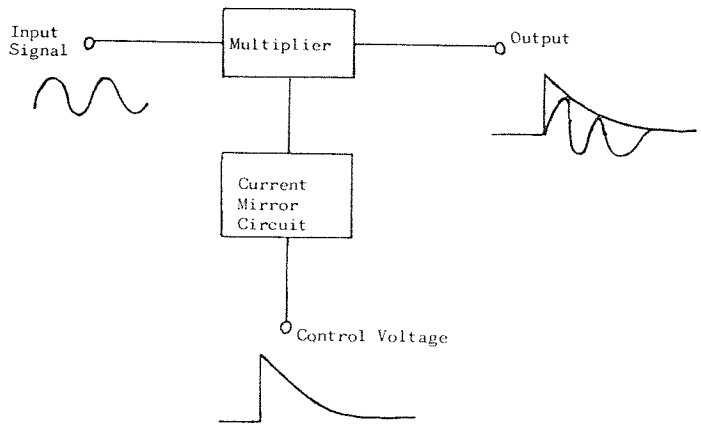

(Figure 3)

Low Frequency Oscillator (L. F. O.)

The L. F. O. consists of mirror integrator and comparator (Figure 4). The output of the L. F. O. is available in squre or triangular waveform. The frequency can be varied with the SPEED CONTROL adjustment.

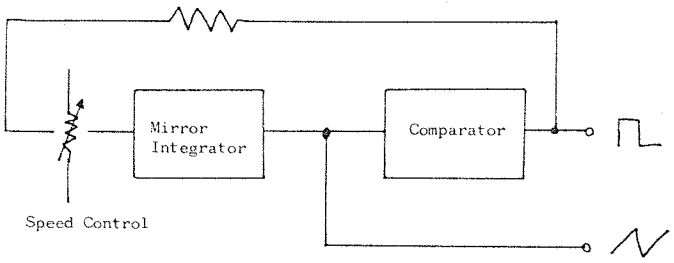

(Figure 4)

Sample and Hold Circuit (S/H)

The sample and hold circuit consists of operational amplifiers, and FET, and holding capacitor "Cs" (Figure 5). The input voltage is sampled at the triggering input timing gate of the switching FET, and is then helding capacitor "Cs" before being applied to the output buffer amplifier.

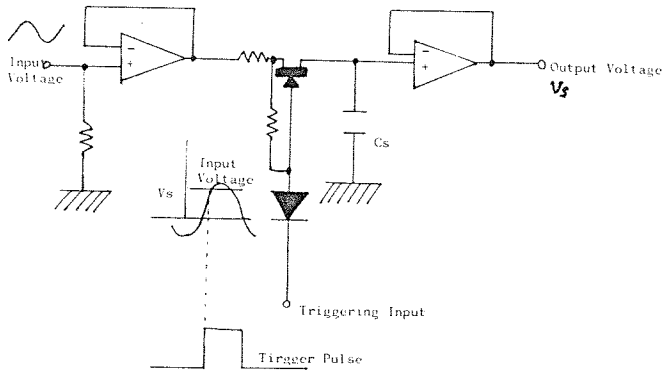

(Figure 5)

Input Circuit

The trigger signal output from the drum is coupled to a common-base amplifier in the input circuit, where it is amplified and used as an enveloped generator triggering pulse. The output of the common-base amplifier also goes to a monostable multivibrator, where it is converted into a triggering pulse with constant pulse width for the sample and hold and sweep circuits. The input sensitivity can be adjusted with the SENSE potentiometer (Figure 6). The envelope-generator triggering pulse levels vary with drum attack strength, thus providing adequate accent to the output.

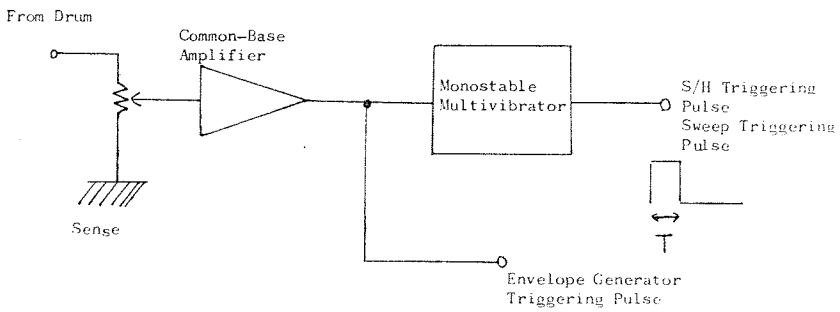

(Figure 6)

Power Supply

The input voltage of 12V DC is regulated into +8V by a three-terminal voltage regulator, and into -8V by a switching regulator (Figure 7).

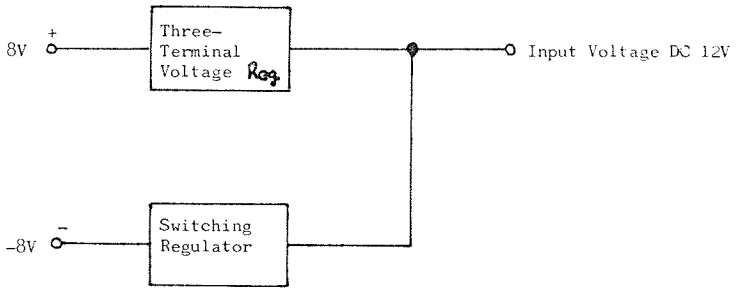

(Figure 7)

OSC.MODE

The outputs of a noise generator and two VCO's are coupled by the OSC.MODE circuit in various combinations controlled by the OSC.MODE switch (Figure 8).

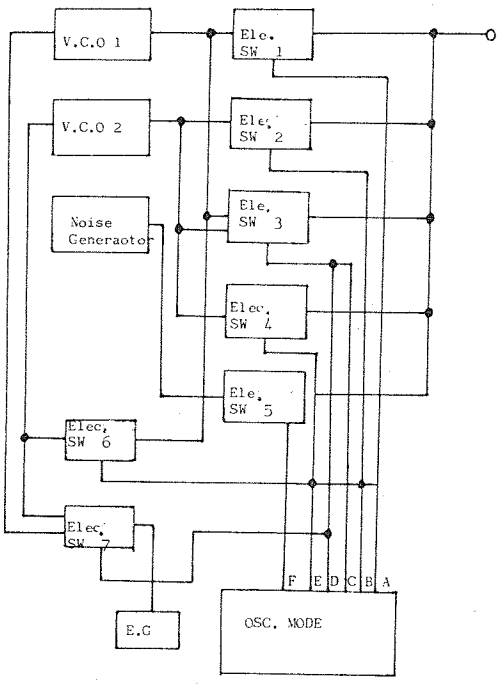

(Figure 8)

MODE A: Electro switch 1 is closed to pass VCO 1 output triangular waveform (Figure 8-1).

MODE B: Electro switch 2 and 6 are closed to pass VCO 2 output frequency-modulated by VCO 1 output (Figure 8-2).

MODE C: Electro switch 3 is closed to pass VCO 1 and VCO 2 outputs as shown in Figure 8-3.

MODE D: Electro switches 3 and 7 are closed to pass VCO 1 and VCO 2 outputs modulated by the envelope generator output.

MODE E: Electro switches 4 and 6 are closed to pass VCO 1 output. In this mode, VCO 2 puts out a saw-tooth waveform (Figure 8-4).

MODE F: Electro switch 5 is closed to pass the output of the white noise generator.

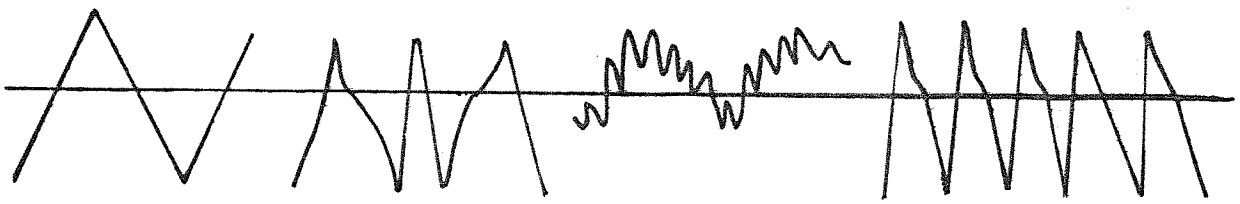

(Figure 8-1) (Figure 8-2) (Figure 8-3) (Figure 8-4)

(Figure 4-2) DRUM UNIT (CU-1)

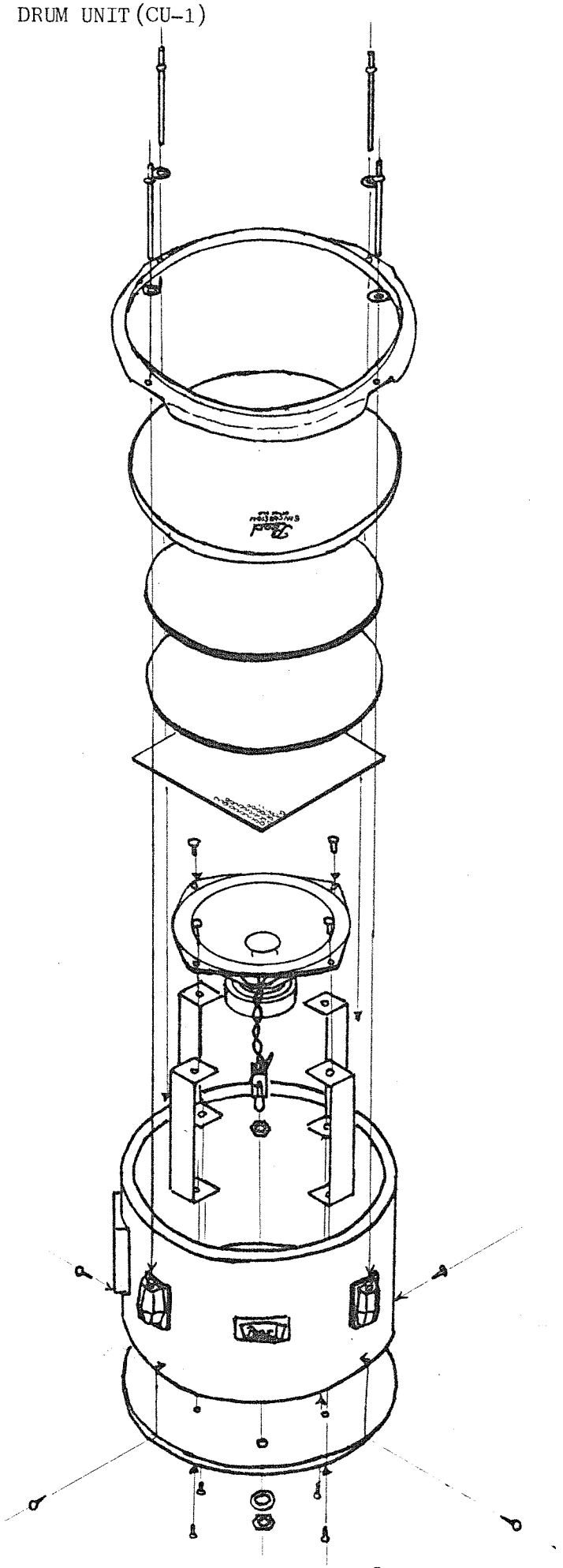

(Figure 5-3) SY-1J PARTS LAYOUT

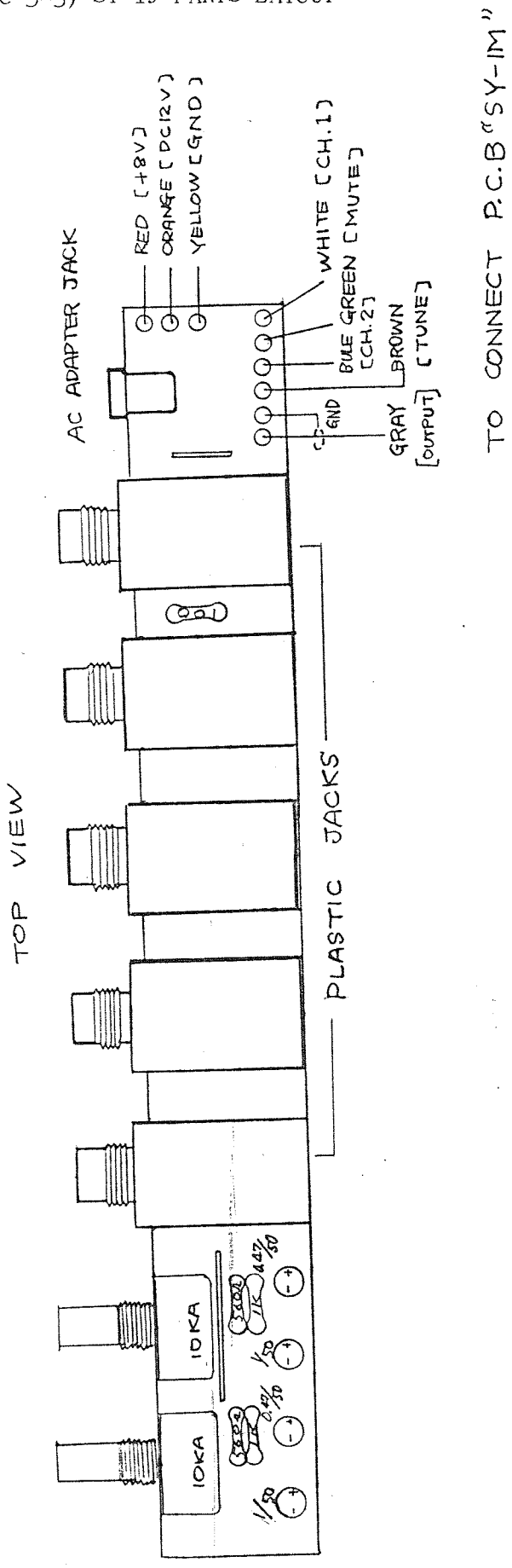

6. BLOCK DIAGRAM

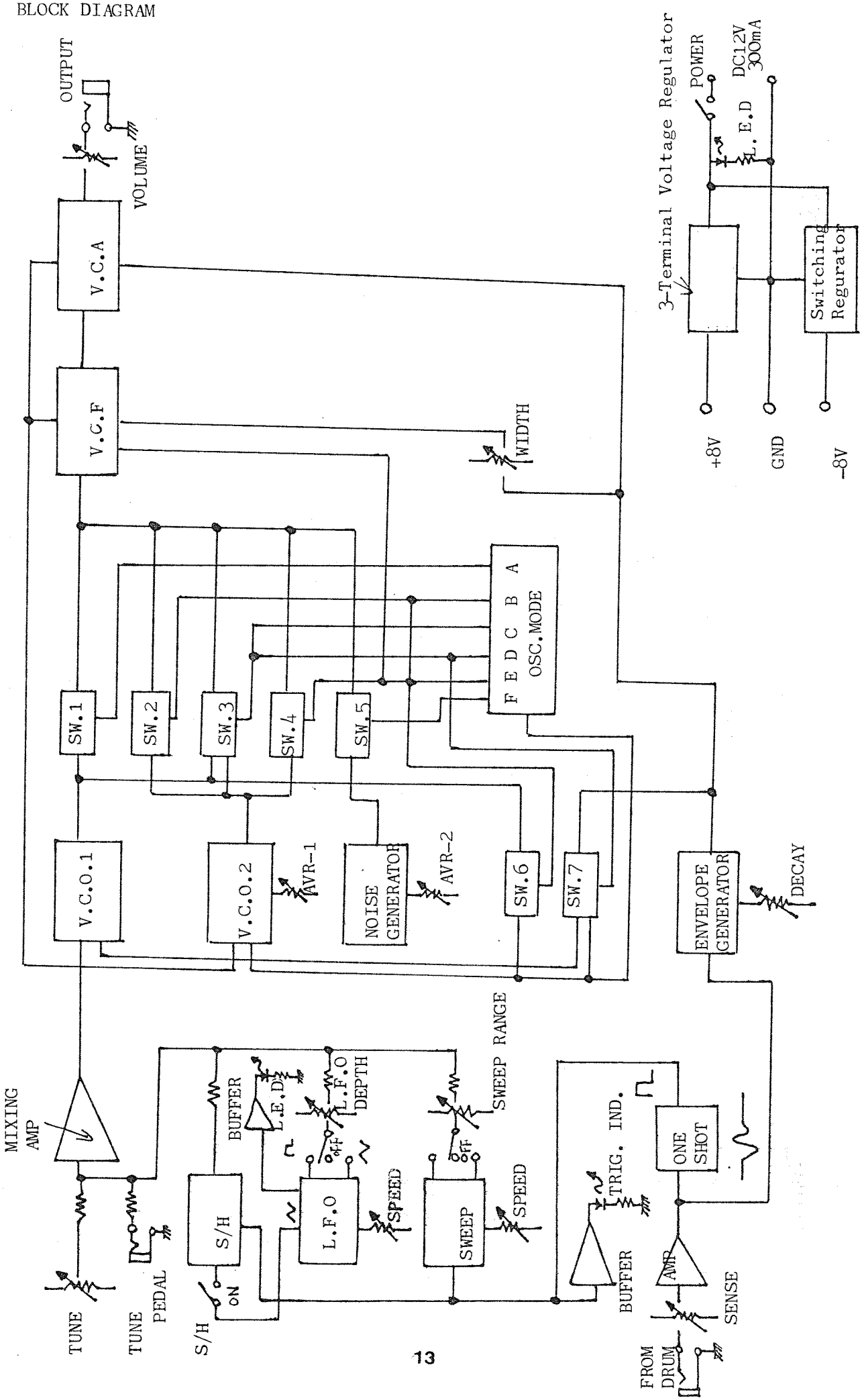

8. BASING DIAGRAM

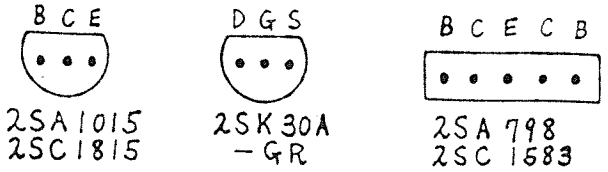

MC4558
MC1458
TL082

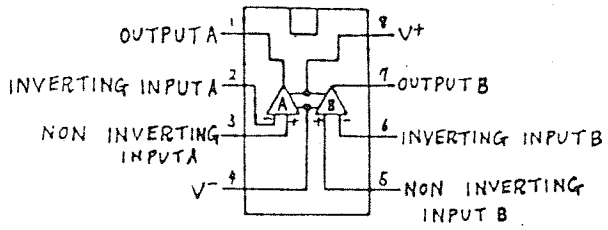

MC14069UB

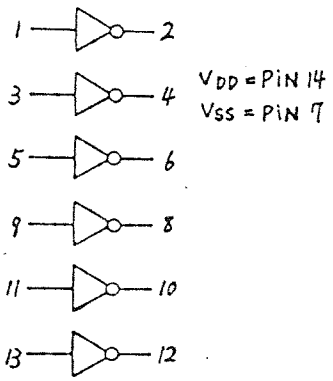

TL497

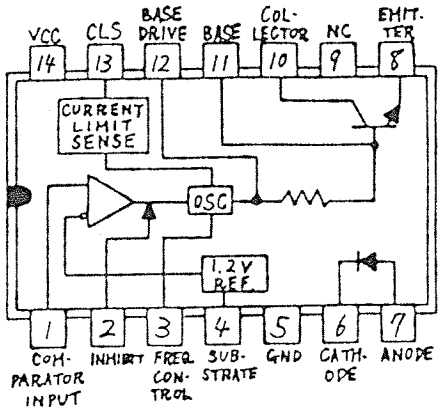

9. ADJUSTMENT PROCEDURE

[1] Oscillator Adjustment

1) Removing the control board from the wooden cabinet.

2) Plug the AC adaptor into a convenient AC outlet.
Connect the drum unit output to CH.1 input.
Set the control switches as follows:

OSC. MODE.....A
TUNE.....5
SWEEP.....OFF
L.F.O.....OFF
S/H.....OFF
POWER.....ON

(The DECAY and WIDTH VOLUME controls may be set to any position)

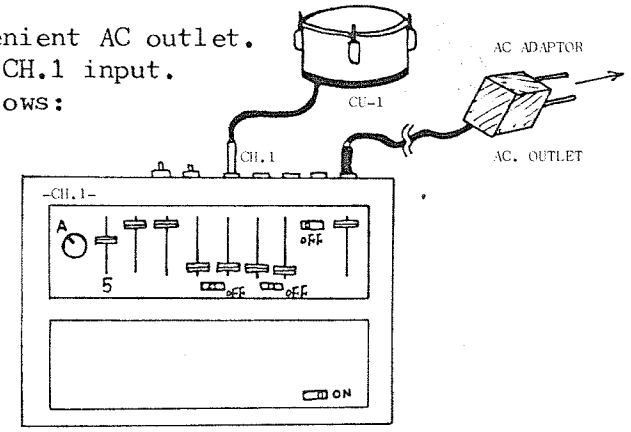

(Figure 9-1)

3) While viewing a frequency counter readout, adjust the VCO 1 output frequency to 440Hz by the TUNE control. The test point is POINT 1 in Figure 9-4. (For this adjustment, strike the drum at 2 to 3 second intervals.)

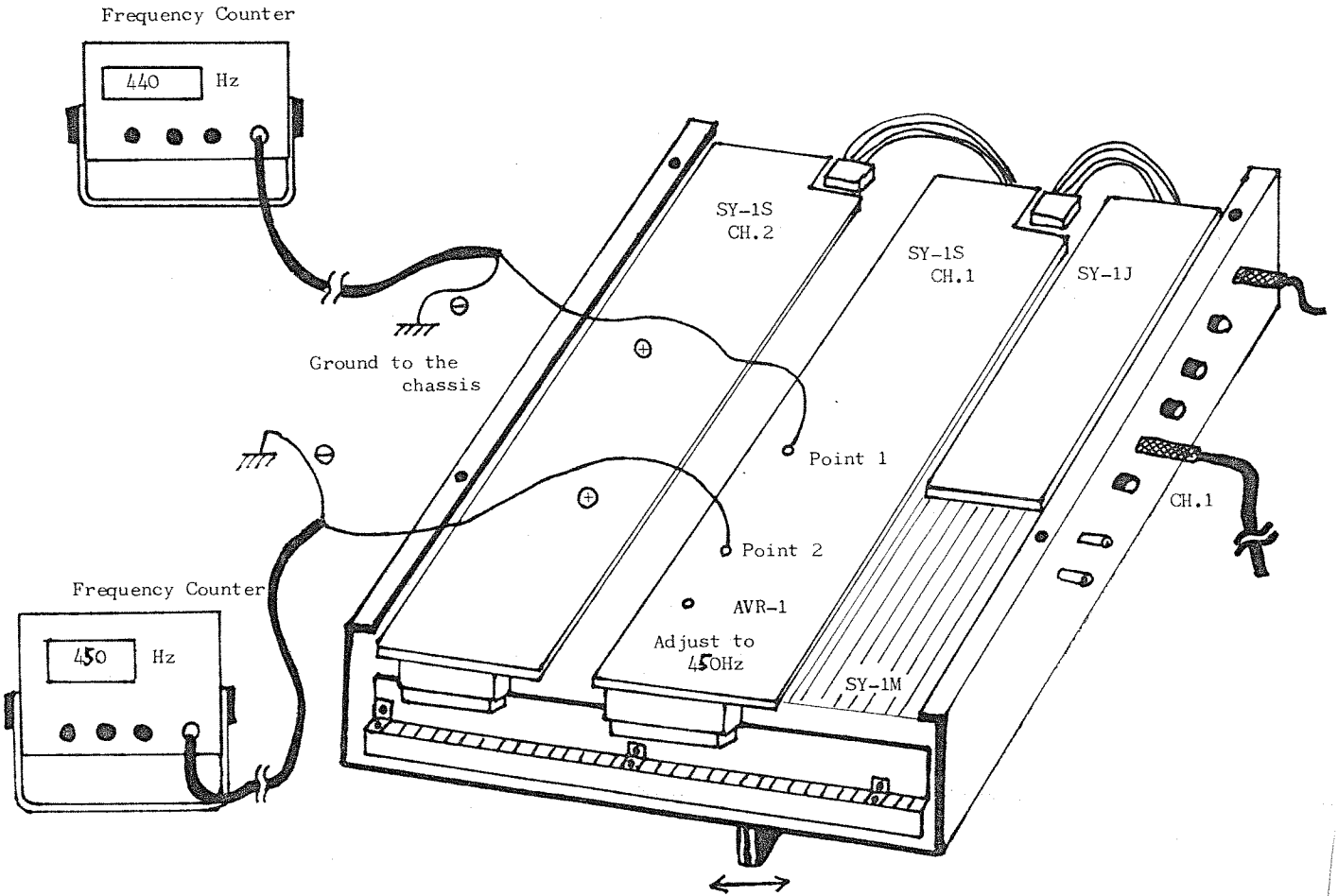

(Figure 9-2)

Adjust to 440Hz with moving a TUNE Control Knob.

Continued →

4) Connect the frequency counter to TEST POINT 2. Adjust VCO 2 output frequency to 450Hz by potentiometer VAR on PC board SY-1S.

5) Make the same adjustment for CH.2.

2 Noise Level Adjustment

Connect an oscilloscope to TEST POINT 3 (Figure 9-5). While viewing the oscilloscope, adjust the noise level to 2.5 Vp-p by potentiometer AVR-2 on PC board SY-1M.

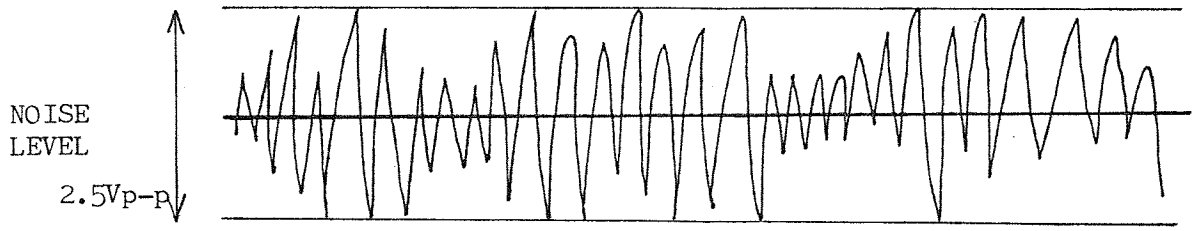

10. PARTS LIST

* CONTROL BOARD (SY-1)

Serial No.	Description	Model No.
1001	Gray Wooden Case	
1002	Metal Case	
1003	Print Circuit Board Assembly	SY-1M
1004	ditto	SY-1S
1005	ditto	SY-1J
1006	Connector Board	SY-1C
1007	IC	MC-1458
1008	IC	JRC-4558D
1009	IC	MC-14069B
1010	IC	TC-082
1011	IC	TL-497
1012	3-Terminal Voltage Regulator	7808
1013	Transister	2SA1015-Y
1014	ditto	2SC1815-Y
1015	ditto (Dual)	2SA789-G
1016	ditto	2SC1583-G
1017	ditto (Fet)	2SK30A-GR
1018	Light Emitting Diode	GL-3AR2
1019	Diode	1S-1588
1020	Choke Coil	TOKIN-125μH
1021	Slide SW.	SLE-2-2-B
1022	ditto	SLE-2-3-B
1023	Rotary SW.	2-6
1024	Potentiometer	15S-10KA
1025	ditto	SR-19R-100KB
1026	ditto (Slide)	15C-10KA
1027	ditto ditto	15C-100KA
1028	ditto	15C-100KB
1029	ditto	15C-500KA
1030	Plastic Jack	HLJ-0305-01-020
1031	AC-adaptor Jack	HEC-047-01-031
1032	Plastic Knob	MP-20
1033	ditto	TK-1134
1034	AC-Adaptor	DC12V-300mA
1035	Clip Connectors (SY-1M)	10P-SHVQ
1036	ditto	12P-SHVQ
1037	ditto	H-5P-SHF-A
1038	ditto (SY-1S)	B-10P-SHF-1AA
1039	ditto	B-12P-SHF-1AA
1040	ditto (SY-1J)	BS-5P-SHF-1AA
1041	Polystyrene Capacitor	100PF $\pm$5%
1042	ditto	1000PF $\pm$5%
1043	Tantalume Capacitor	0.47μF/16V
1044	ditto	2.2μF/16V

* DRUM UNIT (CU-1)

2001	Wood Shell	8" x $\frac{1}{4}$"
2002	Drum Head	Syncussion Ori. Head
2003	Bottom Cover	13LACK
2004	Panching Plate	
2005	Speaker (4")	SF-120-118
2006	Speaker Holdfast	
2007	Phone Jack	3P-Close

11. ALTERED PARTS

Block	Parts of Change	Description
SY-1M	R2	add 4.7K$\frac{1}{4}$R
	R65	from 33K$\frac{1}{4}$R to 3.3K$\frac{1}{4}$R
	C16	from 10/16V to 47/25V
SY-1S	Output of IC9	add 10/16V capacitor

12. TROUBLE SHOOTING

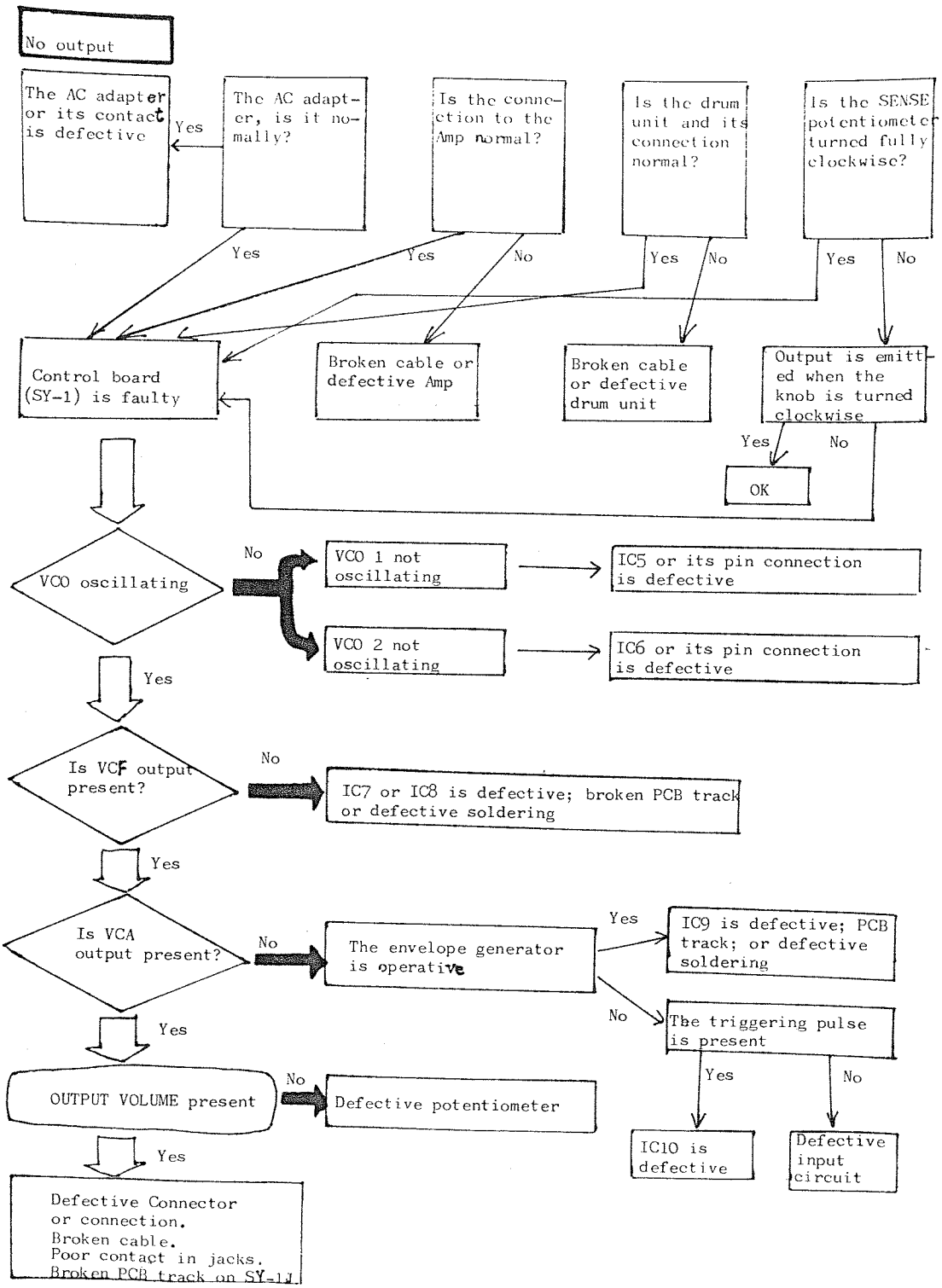

4. DISASSEMBLING

(FIgure 4-1)

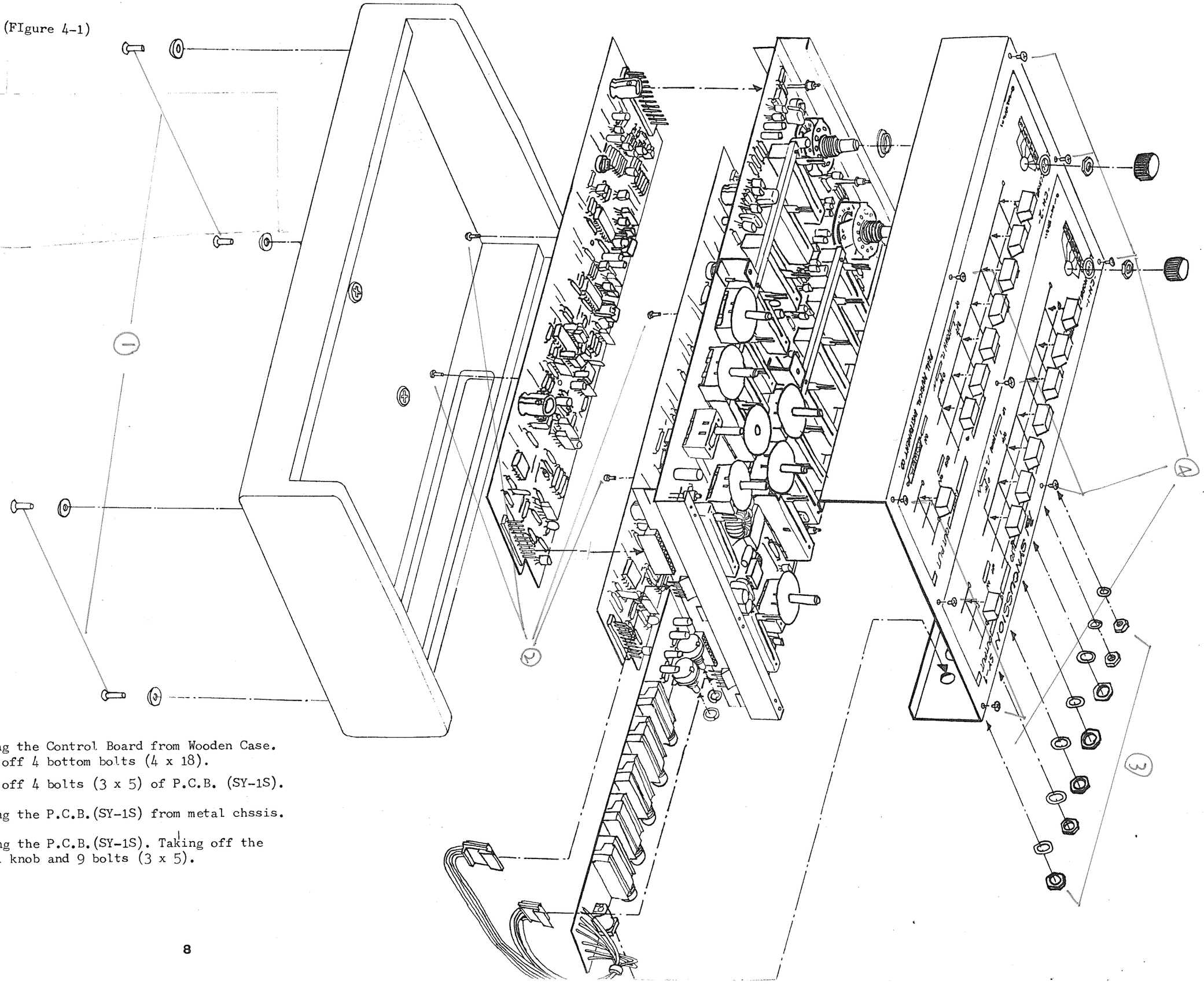

① Removing the Control Board from Wooden Case. Taking off 4 bottom bolts (4 x 18).

② Taking off 4 bolts (3 x 5) of P.C.B. (SY-1S).

③ Removing the P.C.B.(SY-1S) from metal chssis.

④ Removing the P.C.B.(SY-1S). Taking off the control knob and 9 bolts (3 x 5).

Pearl® **SYNCUSSION SY-1**

CIRCUIT DIAGRAM

(Only one channel except Power Suppy)

PRINTED CIRCUIT BOARD SY-1M

PRINTED CIRCUIT BOARD SY-1S (×2)

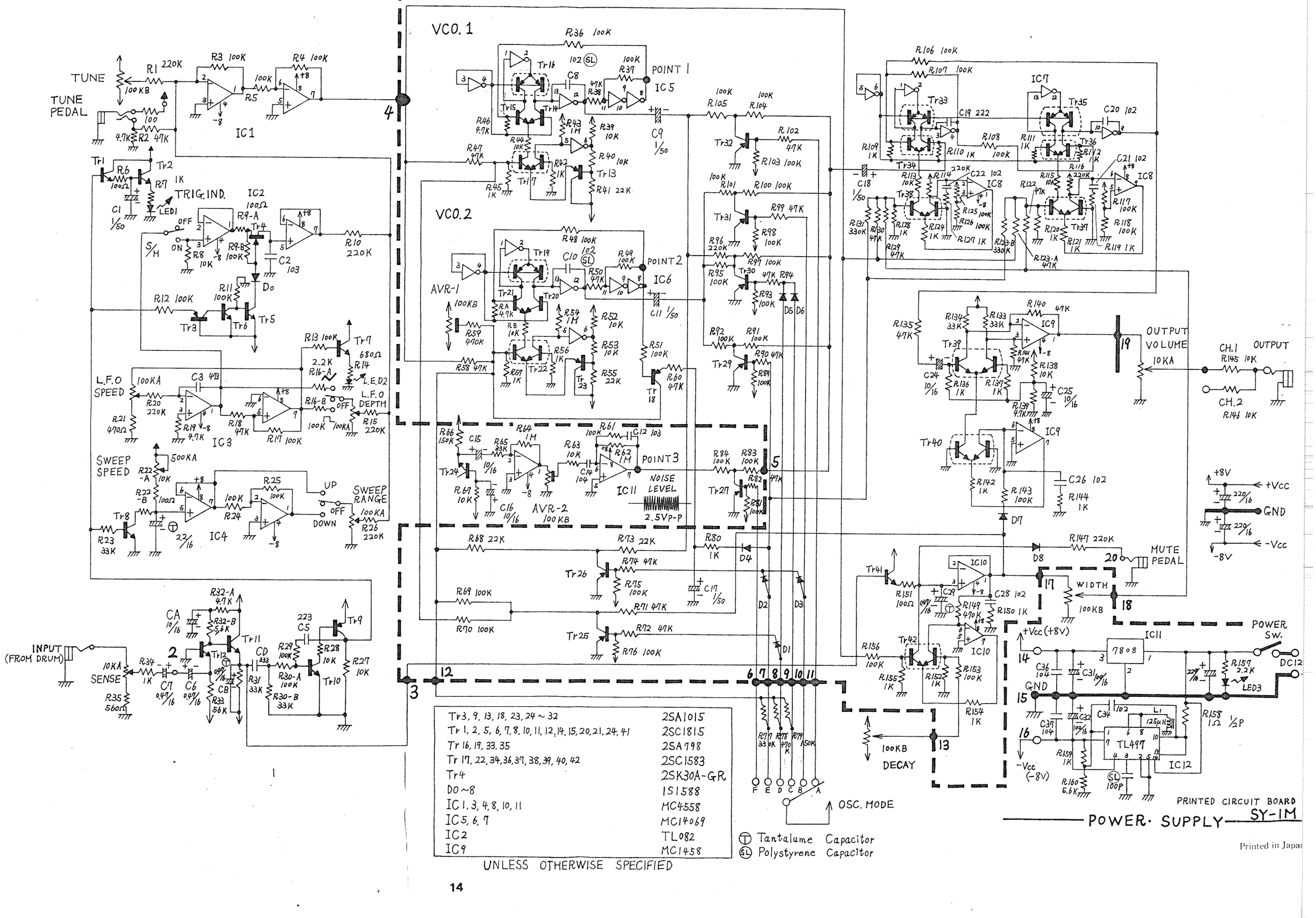

Tr3, 9, 13, 18, 23, 24 ~ 32	2SA1015
Tr 1, 2, 5, 6, 7, 8, 10, 11, 12, 14, 15, 20, 21, 24, 41	2SC1815
Tr 16, 19, 33, 35	2SA798
Tr 17, 22, 34, 36, 37, 38, 39, 40, 42	2SC1583
Tr4	2SK30A-GR
D0 ~ 8	1S1588
IC 1, 3, 4, 8, 10, 11	MC4558
IC 5, 6, 7	MC14069
IC2	TL082
IC9	MC1458

UNLESS OTHERWISE SPECIFIED

Ⓣ Tantalume Capacitor
Ⓢⓛ Polystyrene Capacitor

PRINTED CIRCUIT BOARD SY-1M

POWER · SUPPLY

Printed in Japan

5. PARTS LAYOUT
SY-1M

(Figure 5-1) SY-1M

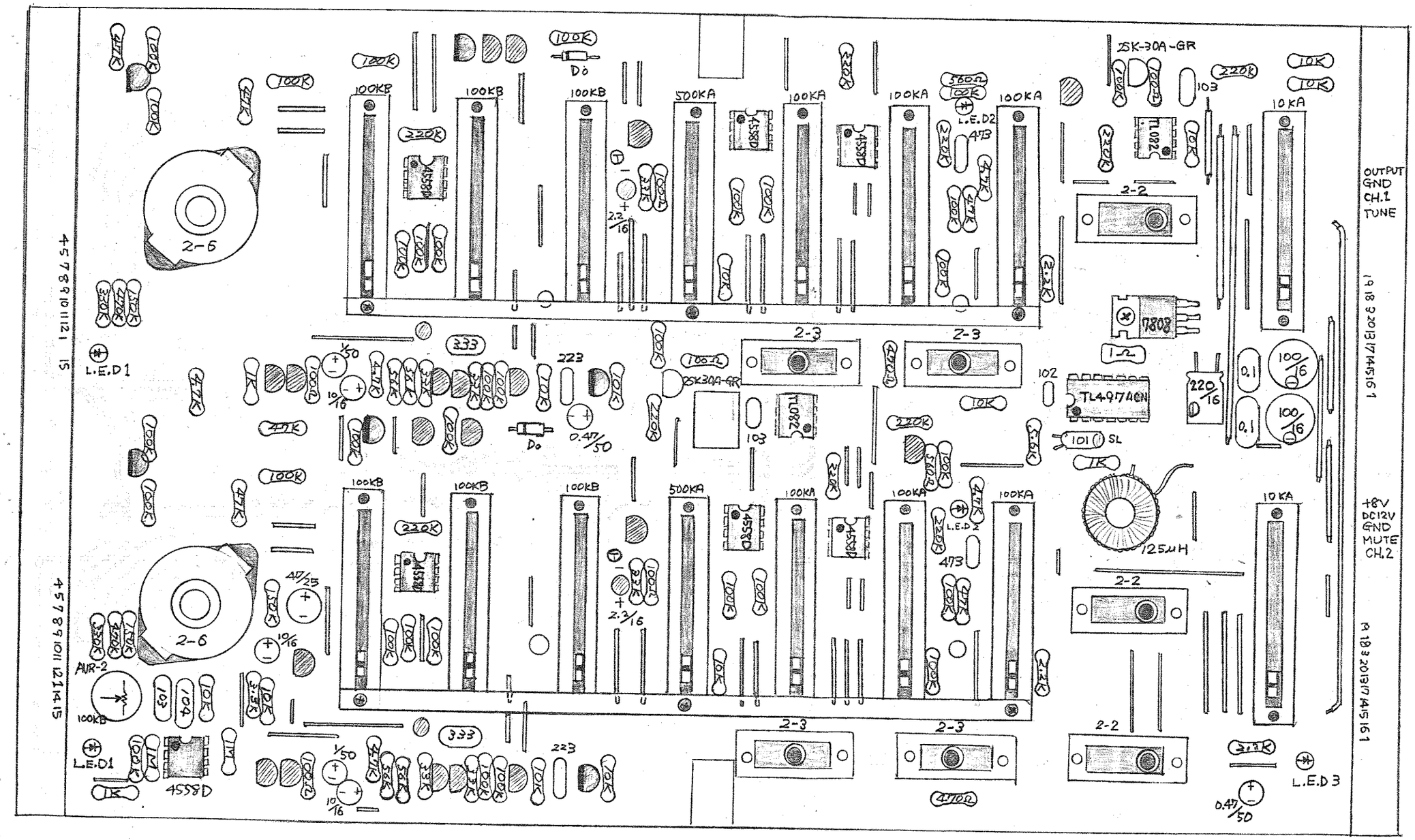

2SA1015-Y

2SC1815-Y

SL Polystyrene Capacitor

Ⓣ Tantalume Capacitor

TOP VIEW

(Figure 9-5)

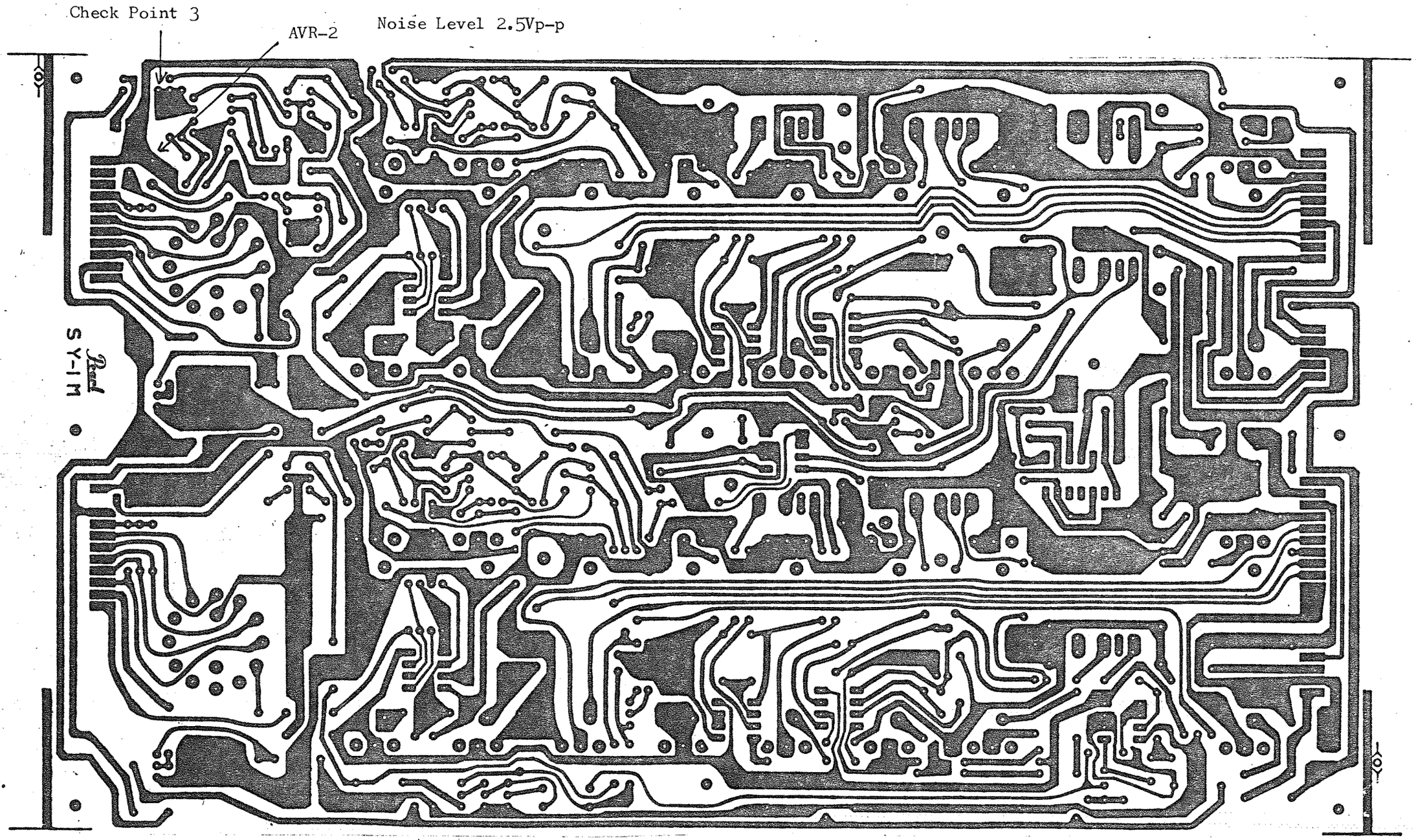

(figure 5-2) SY-1S

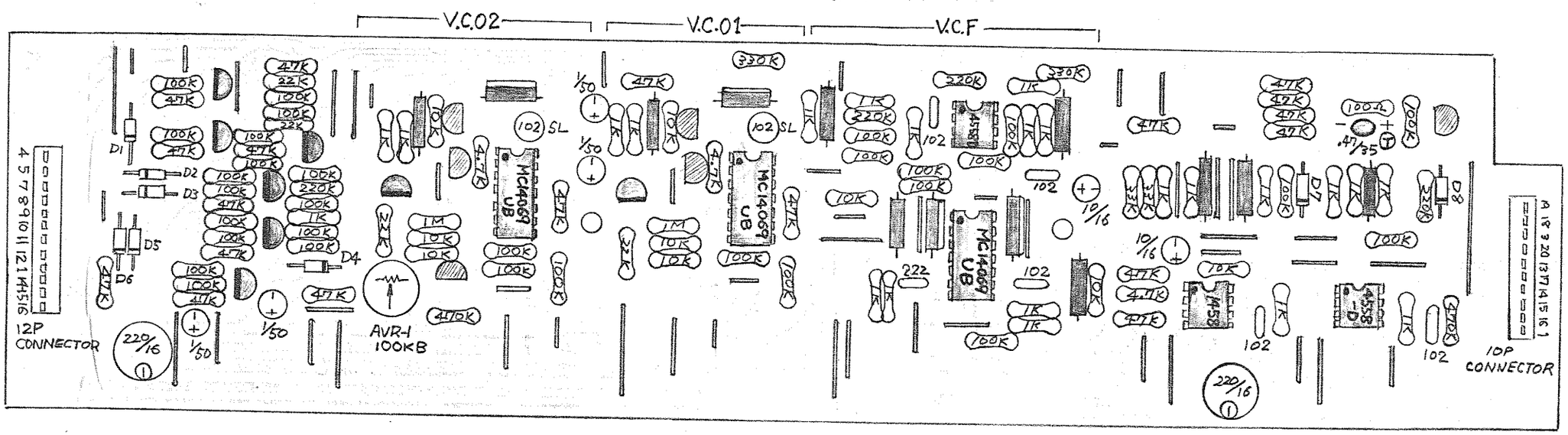

(Figure 9-4)

