Technical File

SC3-A



The Sy40 Platform

The technical files are confidential and the property of InnovaSON S.A.
Any copy, distribution or use needs our agreement – Please contact our technical support service.



WARNING: TO REDUCE THE RISK OF FIRE OR ELECTRIC SHOCK, DO NOT EXPOSE THIS APPLIANCE TO RAIN OR MOISTURE.



The Sy40 must be maintained by experienced, authorized & qualified technicians

The User Manual contains all the operational details and is a great help to verify customers complaint and to check for correct operation.



The Sy40 contains components that may be damaged by electrostatic Discharge.

Before any manipulation, all standard ESD precautions must be taken.

The technical files are confidential and the property of InnovaSON S.A.

Any copy, distribution or use needs our agreement – Please contact our technical support service.

I. Description P6

I.1 The Top and front of the Desk P7

I.2 The Rear of the Desk P7

II. The different modules P8

II.1 The channel control module P8

- *Disassembly of the channel control module* P8
- *Exchangeable parts on channel control module* P9

II.2 The Utilities module P10

- *Disassembly of the Utilities module* P10
- *Exchangeable parts on the Utilities module* P10

II.3 The Quadfad module P11

- *Disassembly of the Quadfad module* P11

A- To remove one of the six quadfads installed in the ModQ6 module P11

- *Connections available on the Quadfad* P13

Exchangeable parts on the Quadfad module P14

B- To remove the ModQ6 module P15

II.4 The ModQ6 module P17

- *Disassembly of the ModQ6 module* P17
- *Different parts integrated on the ModQ6 module* P18

II.5 The Sensplit modules P19

A- The sensplit slave P19

B- The sensplit Master P20

- *Location of the Sensplit master module* P20
- *Details about ribbon and power connectors of the Sensplit Master* P21

II.6 The motorized faders' PSU : NFS110-7612 P21

Location of the NFS110-7612 module P23

II.7 The Sensplits, Quadfad's logic and Labels' PSU : NLP40-7605 P23

Access to the NLP40-7605 module P24

II.8 The internal audio rack P24

A- The common Bus of the Audio rack P25

B- MC-64 communication and LED Vu-meters driving P25

C- The PSU of the audio rack : IN004A P26

D- The front LED panel of the audio rack : IN005A P27

II.9 The 48V powering : NLP110-9624 P27

Connectors and pins assignment P28

II.10 The PC module P28

Disassembly of the PC module P29

The PC board in details P30

The MIDI board in details P31

II.11 The PC's PSU and front LED of the PC: ACE-870T & IN005A P31

A- PC powering P31

PWS Connectors and pins assignment P32

B- The PC's INOO5A P32

II.12 The PWS distributor : IN012B P33

Connectors and pins assignment P33

II.13 The LCD Screen P34

Disassembly of the LCD module P34

Adjustment of the LCD module (picture setting and spinning hardness) P35

II.14 The Keyboard and mini-trackball P36

III. The air cooling : flow and powering P37

III.1 Air flow P37

III.2 Fans powering P37

IV. Cabling plans P39

IV.1 Power distribution from main voltage to others modules P39

IV.2 DC voltages distribution P40

IV.3 Cabling of the PC P41

IV.4 Vu-meters modules : cabling and powering P42

IV.5 Ribbons cabling : Sensplits, Quadfads and panels P43

Annexes P44

- *Common digital Bus1* P44
- *DC/DC converter IN004A* P45
- *Headphone, serial and parallel connections* P48
- *PC ribbons* P49
- *DC voltages cables* P50
- *Main Voltage cables* P51
- *Exchangeable parts and part-codes* P52
- *Sensplit Master programming* P53
- *Cool and silent Kit Sy40* P54

I. Description

is modular and integrates its own audio local rack located at the back of the console.

This local rack is able to receive **6 input or output audio modules**. The available slots are organized like following :

- **Slot A : Output module (XO-8D2, MO-8D3, DO-8X or DO-8A)**
- **Slot B : Input (SI-8D3, DI-8S or DI-8Src) or Output module**
- **Slot C : MC-64, controller and coax. Transmission/Reception module**
- **Slot D : DSP Sy40 or DSP Sy40-8**
- **Slot E : Input or Output module**
- **Slot F : Input or Output module**
- **Slot G : Input or Output module**
- **Slot H : Input or Output module**

Organization of the local audio rack

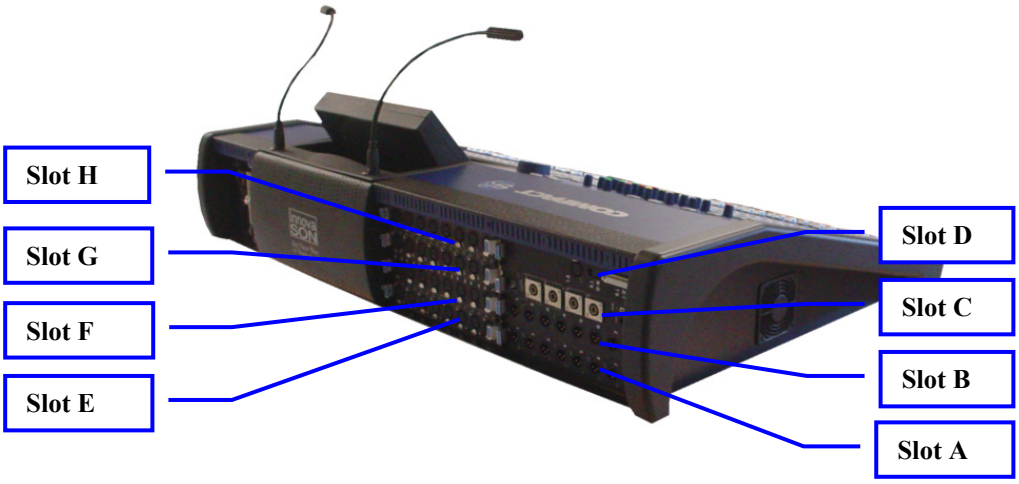

The integrated audio rack of the Sy40 has the same functioning and receives the same controller module (MC-64) than the Mix-Box which composes a Muxipaire or a Sy-80 platform. Please refer to the Muxipaire Service Manual to take knowledge about the different modules, their communication and the Bus1 functioning.

The technical files are confidential and the property of InnovaSON S.A.
Any copy, distribution or use needs our agreement – Please contact our technical support service.

I.1 The Top and front of the Desk

The picture 2 shows the different modules and connections available on the top and front of the Sy40. All of these modules are precisely described in this document, at the appropriate section of the ***chapter II***.

Top and front of the Desk

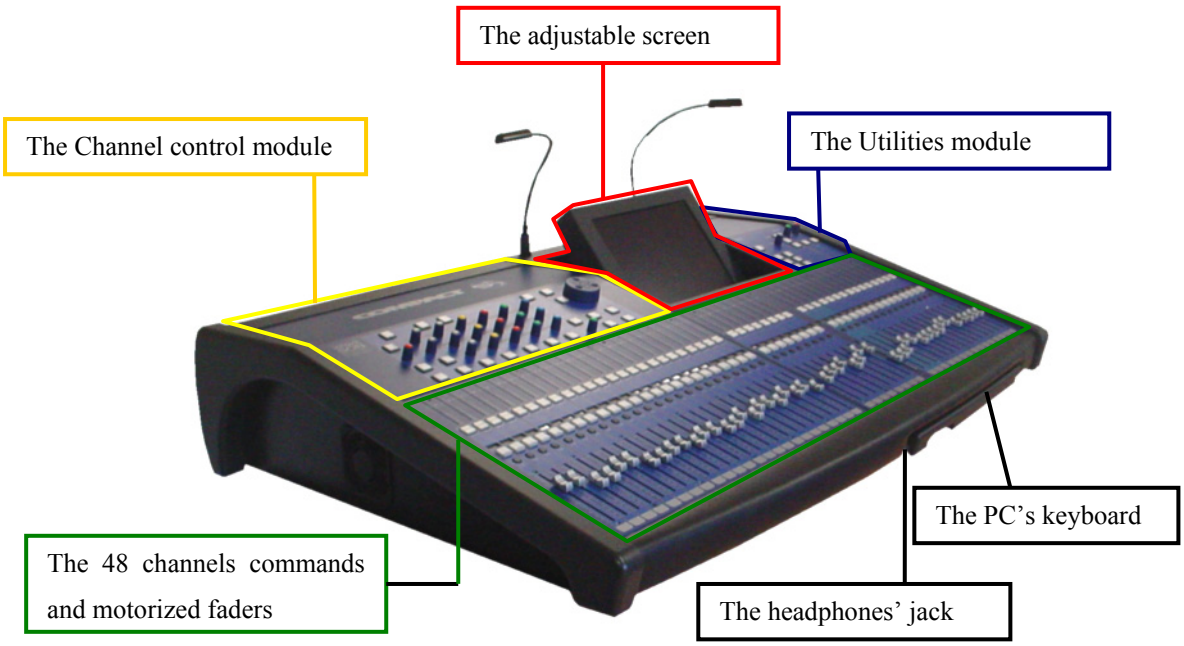

I.2 The Rear of the Desk

Rear of the Desk

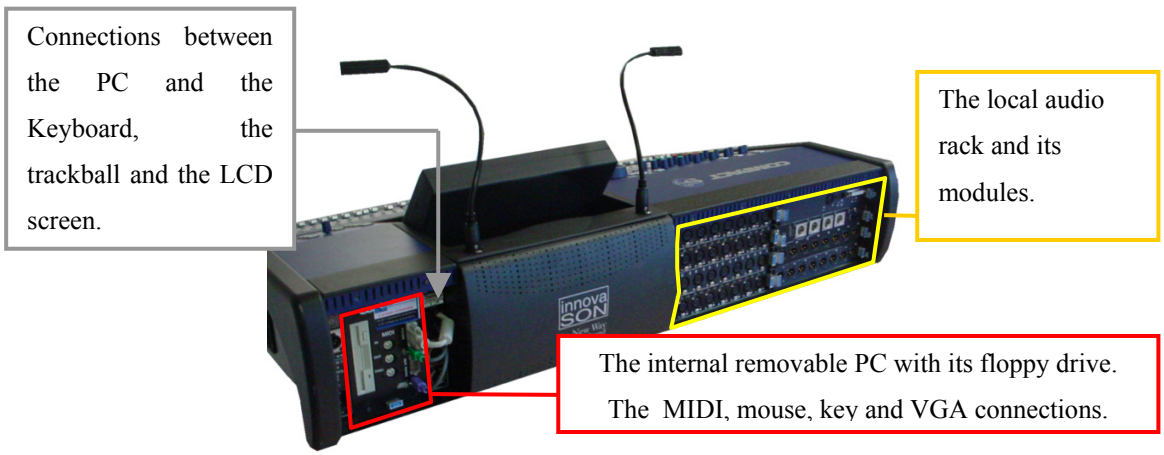

The technical files are confidential and the property of InnovaSON S.A.
Any copy, distribution or use needs our agreement – Please contact our technical support service.

II. The different modules

This chapter details the setting up of the elements composing the Sy40 surface control.

II.1 The channel control module

The channel control module is composed by a metallic panel equipped with two electronic boards. These boards are not available apart. In case of breakdown you'll have to replace the entire module.

Disassembly of the channel control module :

1- Remove the plastic screen contour. Use a little screw driver to remove the 6 screws.

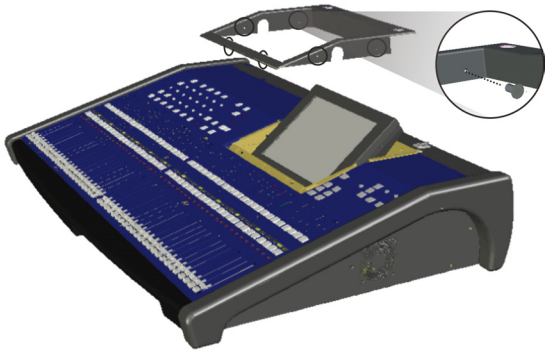

2- Remove all the screws (five on the back and one on the right front) in order to withdraw the module.

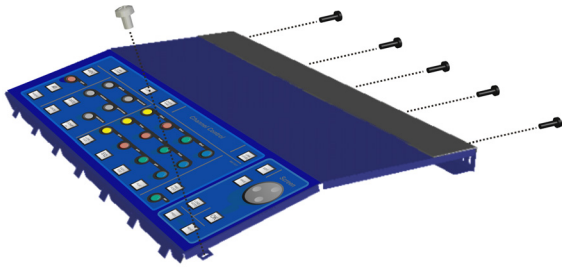

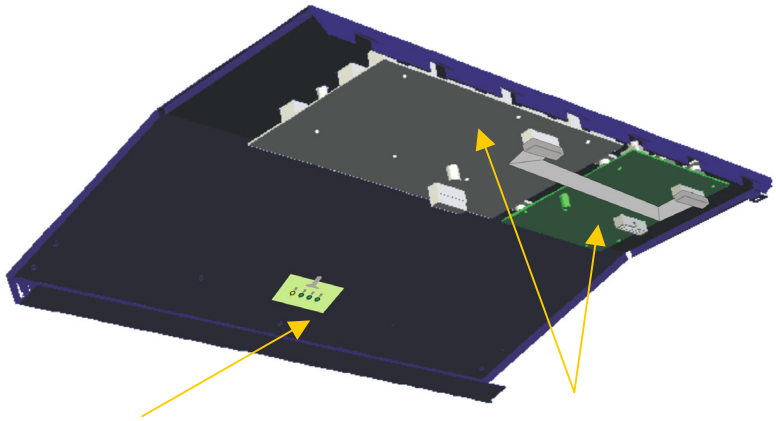

Front LED panel, see *section II.8D*

Electronic boards with coders and switchs

The technical files are confidential and the property of InnovaSON S.A.
Any copy, distribution or use needs our agreement – Please contact our technical support service.

Exchangeable parts on the channel control module :

Coder & Button



Designation	Part number
Rotaty coder	CRPT0002-000
Blue Pot Button	CXBT0001-000
Green Stickers	CXBT0020-000
Yellow "	CXBT0021-000
Red "	CXBT0022-000
Grey "	CXBT0023-000
Blue "	CXBT0024-000

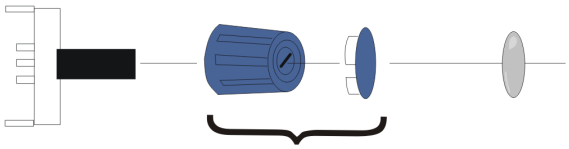

Rotary coder *Blue pot button* *Stickers cap*

Red Switch



Designation	Part number
Switch + LED	CPWT0003-000
Black adorner	CPWA0002-000
Cap	CPWA0001-000

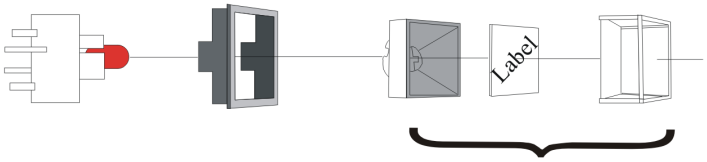

Switch *Adorner* *CAP*

Yellow Switch



Designation	Part number
Switch + LED	CPWT0001-000
Black adorner	CPWA0002-000
Cap	CPWA0001-000

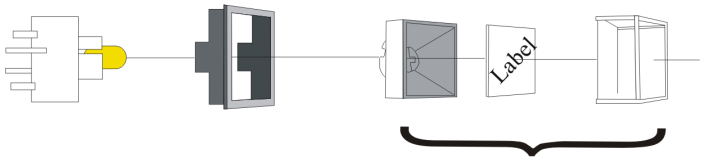

Switch *Adorner* *CAP*

Coder & Jog Button

Designation	Part number
Rotaty coder	CRPT0002-000
Blue Jog	MT0002-001-01

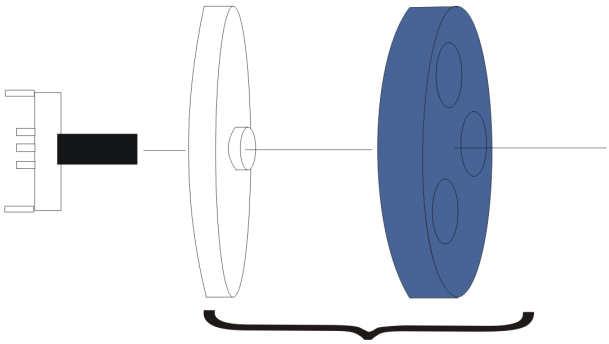

Rotary coder *Blue Jog*

The technical files are confidential and the property of InnovaSON S.A.
Any copy, distribution or use needs our agreement – Please contact our technical support service.

II.2 The Utilities module

The Utilities module is composed by a metallic panel equipped with one electronic boards. This board is not available apart. In case of breakdown you'll have to replace the entire module.

Disassembly of the Utilities module :

1- Remove the plastic screen contour. Use a little screw driver to remove the 6 screws.

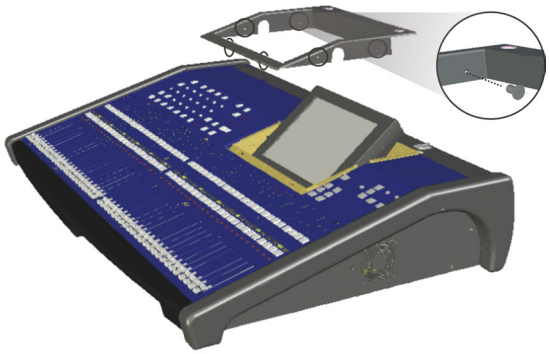

2- Remove all the screws (2 on the back and one on the left front) in order to withdraw the module.

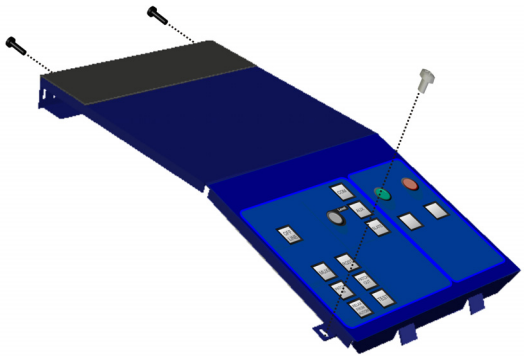

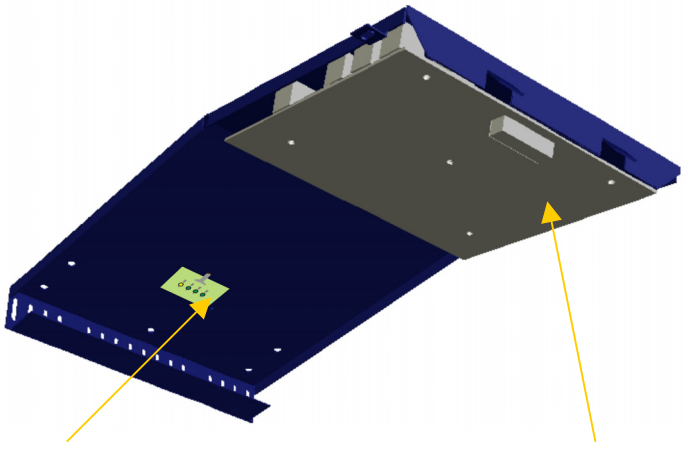

Front LED panel, see section II.10B

Electronic board with coders and switchs

Exchangeable parts on the Utilities module :

See the exchangeable parts of the Channel Control module (***section II.1***).

The technical files are confidential and the property of InnovaSON S.A.
Any copy, distribution or use needs our agreement – Please contact our technical support service.

II.3 The Quadfad module

The quadfad is a module providing for 4 channels :

- A motorized ALPS 100mm Fader
- A set of switches for the SELECT – MUTE – CUE functions
- A four characters label for the driven channel identification.

Disassembly of the Quadfad module :

A- To remove one of the six quadfads installed in the ModQ6 module :

1- Remove the 24 plastics caps (on the left or right module depending of your need).

2- Remove the 4 Philips screws of the ModQ6' blue panel.

3- Remove the 3 Hex screws of the ModQ6' blue panel.

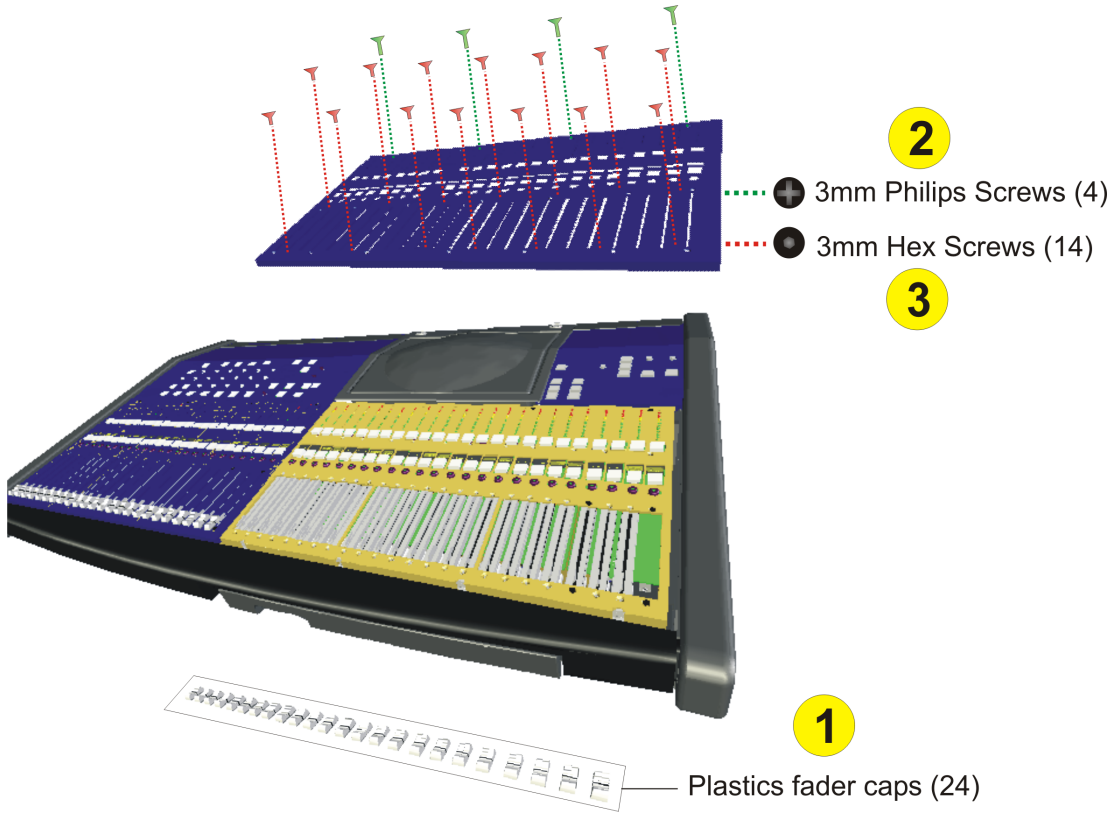

The technical files are confidential and the property of InnovaSON S.A.
Any copy, distribution or use needs our agreement – Please contact our technical support service.

4- Remove the screws concerning the Quadfad that you want to pick.

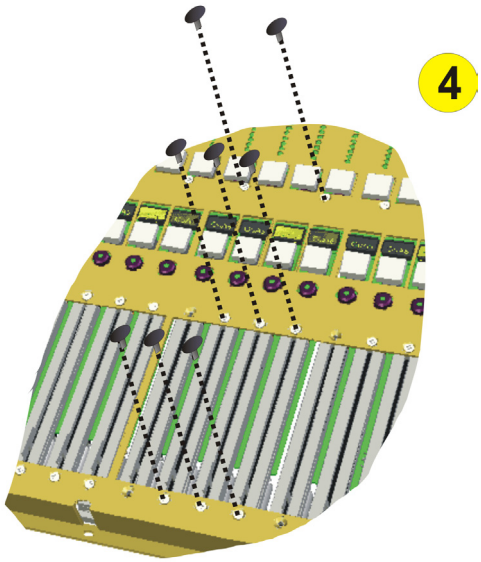

5- Rotate the Quadfad

6- Pull the Quadfad and disconnect its ribbon and the PSU connector

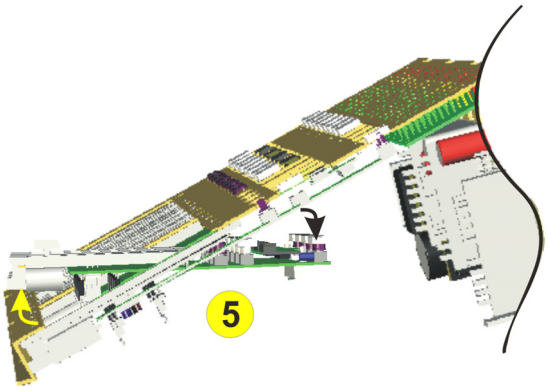

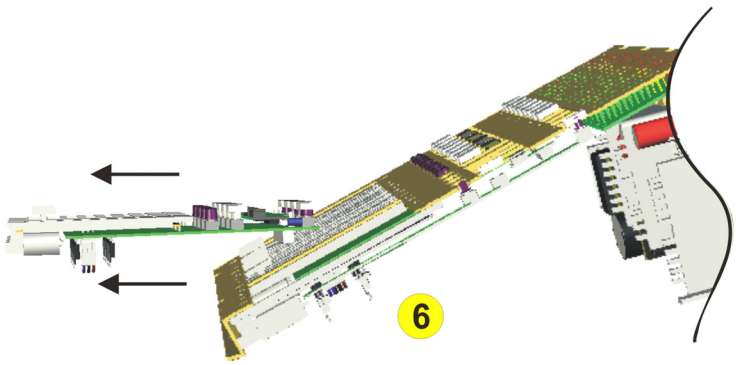

The technical files are confidential and the property of InnovaSON S.A.
Any copy, distribution or use needs our agreement – Please contact our technical support service.

Connections available on the Quadfad :

The Quadfad is equipped by 2 connectors, one Molex for the 4 motorized faders powering and one ribbon for the logic and labels powering as well as the communication data with the Sensplit slave or master (depending of its location in the ModQ6 module).

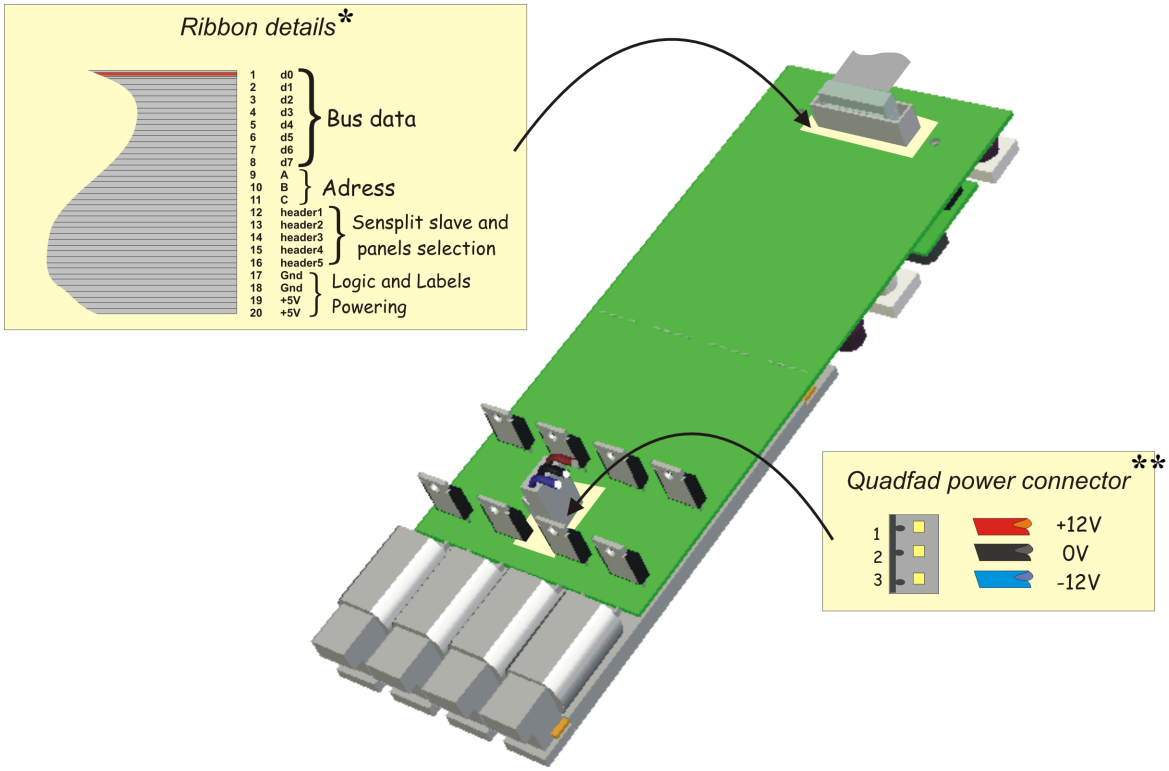

We strongly recommend to disconnect first the ribbon and at last the power connector.

- **See the* ***section IV.5*** *regarding the ribbon cabling of the Quadfads in the ModQ6*
- *** See the* ***section II.5*** *regarding the NFS110-7612 power supply modules.*

The technical files are confidential and the property of InnovaSON S.A.
Any copy, distribution or use needs our agreement – Please contact our technical support service.

Exchangeable parts on the Quadfad module:

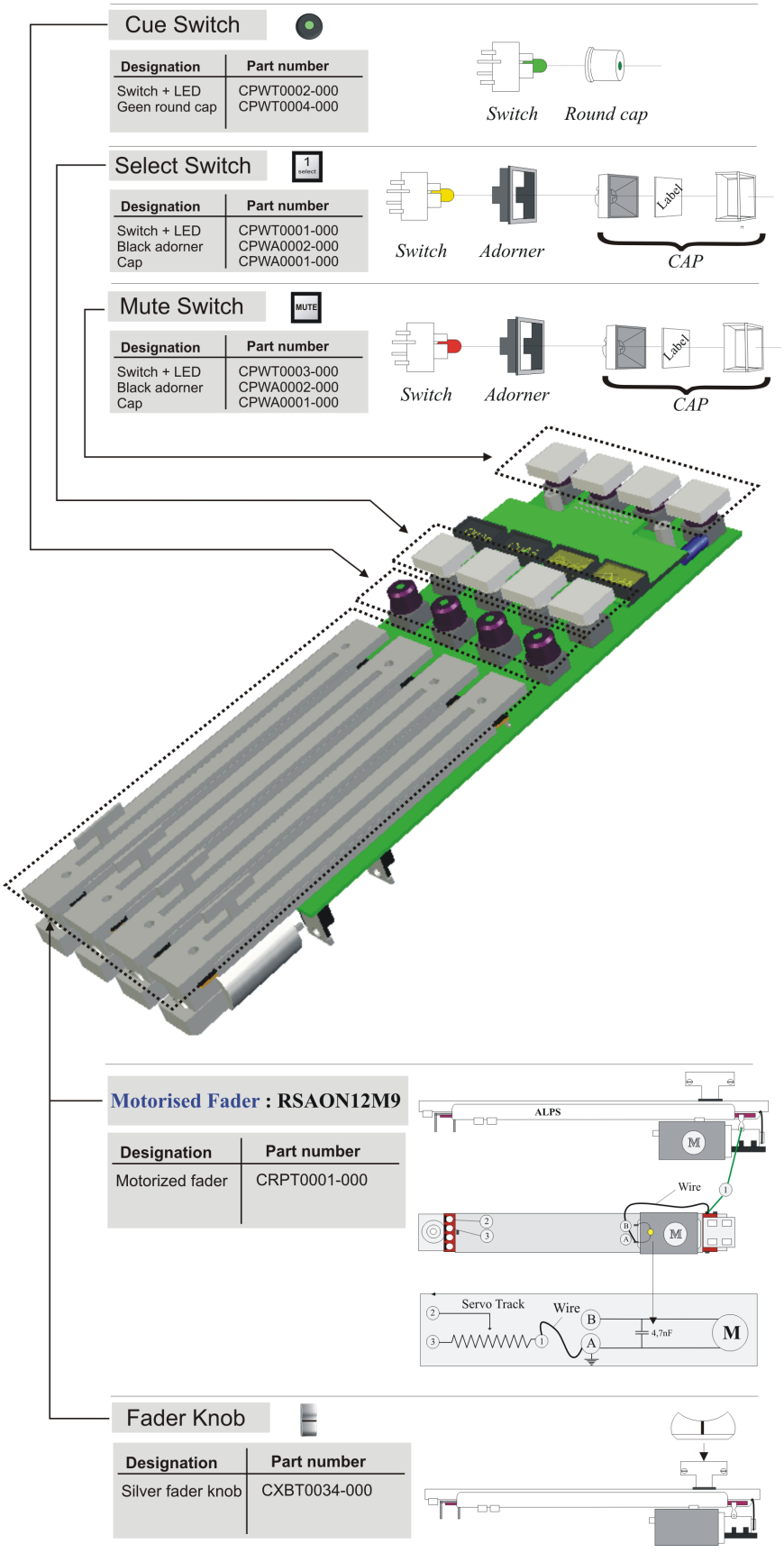

The technical files are confidential and the property of InnovaSON S.A.
Any copy, distribution or use needs our agreement – Please contact our technical support service.

B- To remove the ModQ6 module :

The ModQ6 module is a metallic chassis which support 6 Quadfad modules. You can remove this module to replace quickly all the Quadfads modules (ie : for a breakdown investigation or a quick repair) or to investigate about the NFS110-7612 PSU.

Independently to the module that you want to reach, you'll have to remove the Channel control and the Utilities module.

- *To remove the Channel Control module :* ***see section II.1***
- *To remove the Utilities module :* ***see section II.2***

In the following example we'll see all the step regarding the disassembly of the right ModQ6 module, the same steps are to be followed for the left one.

1- Remove the 4 bottom cruciform screws (4 screws for each ModQ6).
2- Remove the 2 side cruciform screws.

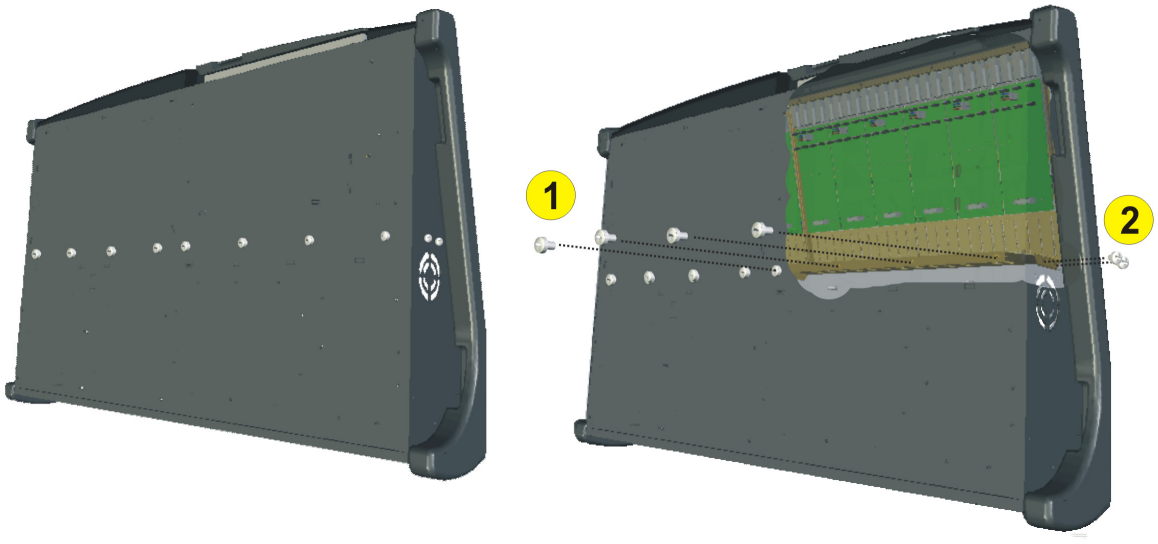

The technical files are confidential and the property of InnovaSON S.A.
Any copy, distribution or use needs our agreement – Please contact our technical support service.

3- Remove the 2 screws which tighten the both ModQ6 modules.
4- Disconnect the 2 ribbon connectors (one connecting the Sensplit slave to the Sensplit master and one connecting one of the 6 Quadfad directly to the Sensplit master).
5- Disconnect the 5V connector (for the Sensplit Slave) and the Main voltage connector (for the motorized faders' PSU).

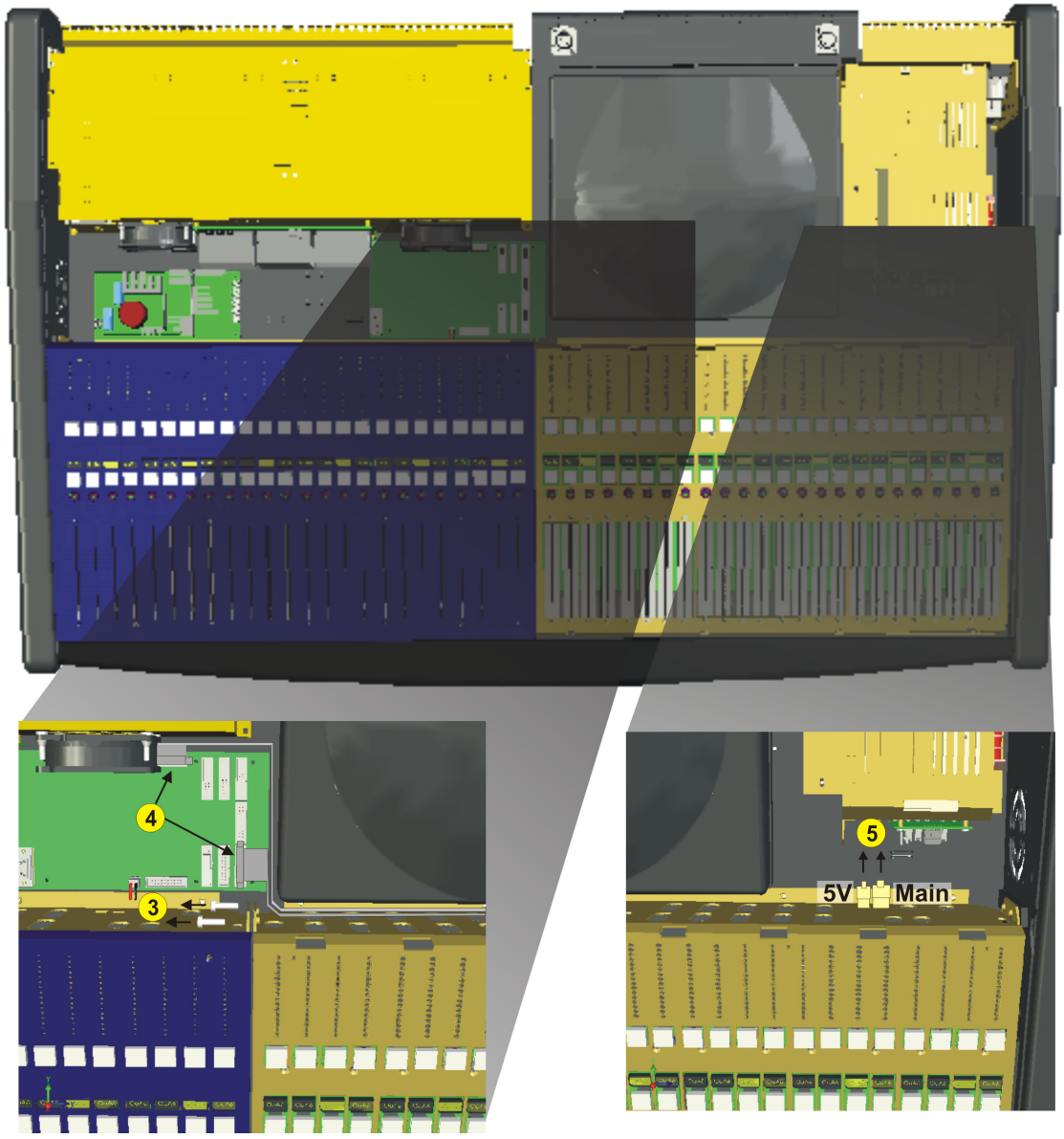

The technical files are confidential and the property of InnovaSON S.A.
Any copy, distribution or use needs our agreement – Please contact our technical support service.

6- Remove the 4 frontal screws.

7- Be sure that all the previously connectors are disconnected and pull the module to remove it from the chassis.

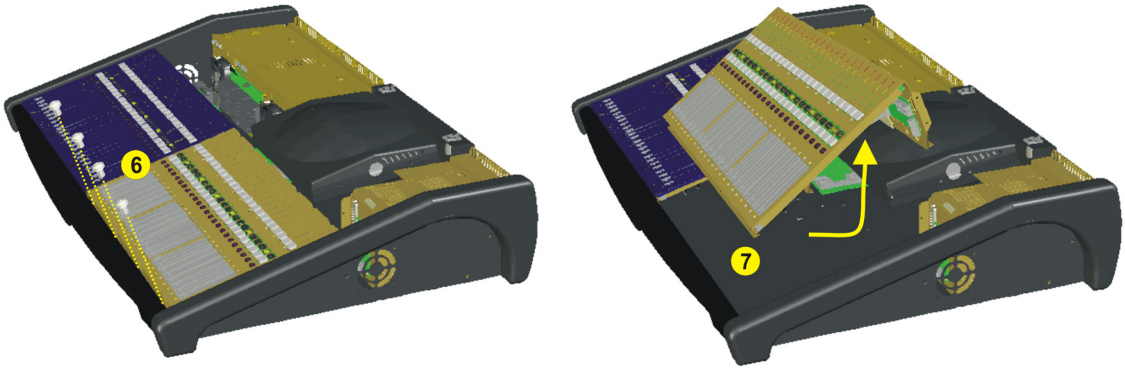

II.4 The ModQ6 module

The ModQ6 module is composed by a metallic chassis, 6 Quadfads modules, 1 Sensplit slave, 2 PSU (one providing +12V and the other providing –12V) and the vu-meters bargraph.

Disassembly of the ModQ6 module :

▶ *see the **part B of the section II.2** to take the knowledge regarding the disassembly of the ModQ6.*

The technical files are confidential and the property of InnovaSON S.A.
Any copy, distribution or use needs our agreement – Please contact our technical support service.

Different parts integrated on the ModQ6 module :

The following drawing shows the available and removable parts from the chassis.

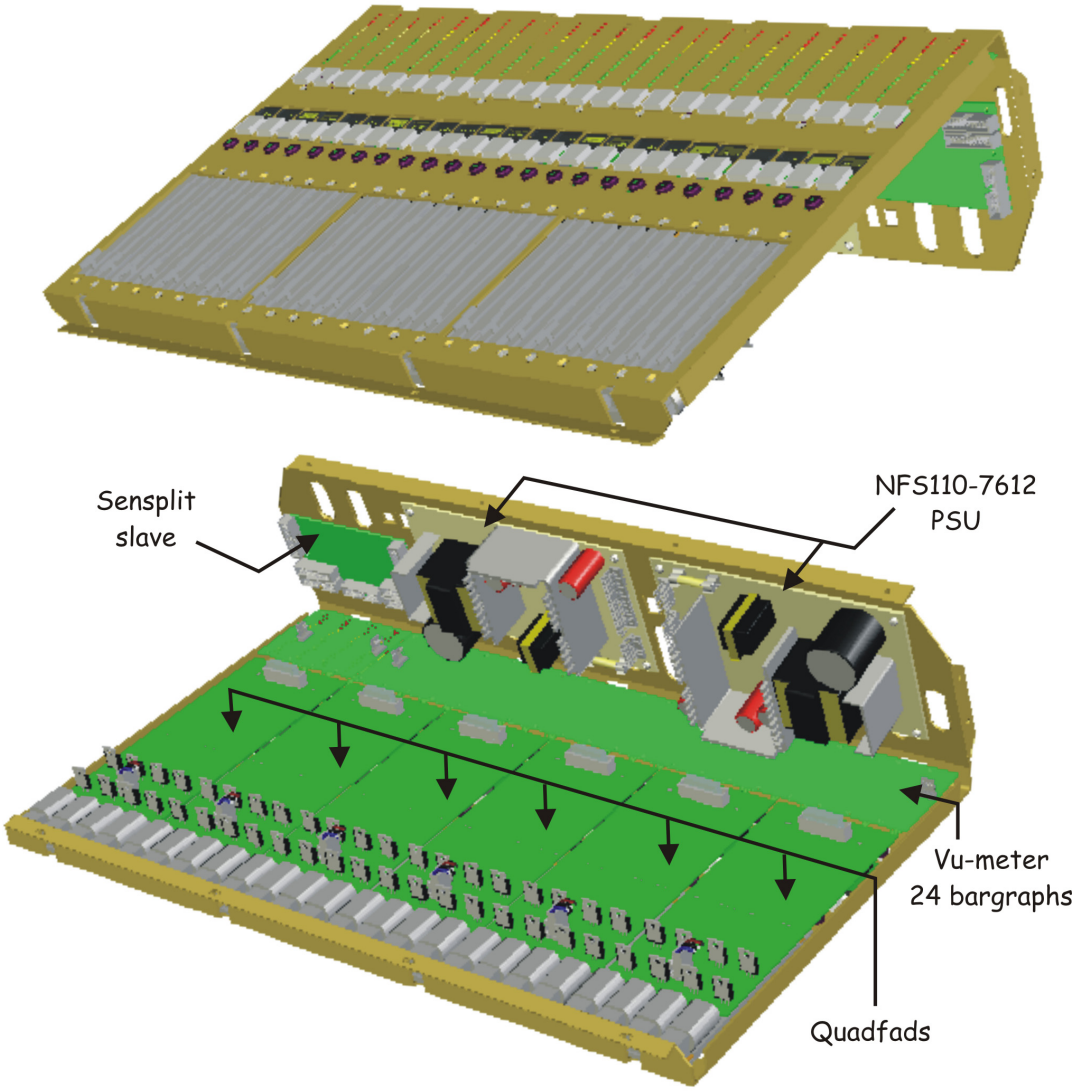

The technical files are confidential and the property of InnovaSON S.A.
Any copy, distribution or use needs our agreement – Please contact our technical support service.

II.5 The Sensplit modules

The Sensplit modules allow the addressing and the communication between all the controllers of the desk and the internal PC of the console, thru the serial RS232 port.

A- The sensplit slave :

The Sensplit slave distribute to 5 Quadfads the data coming from, and sending to, one ribbon cable of the Sensplit Master.

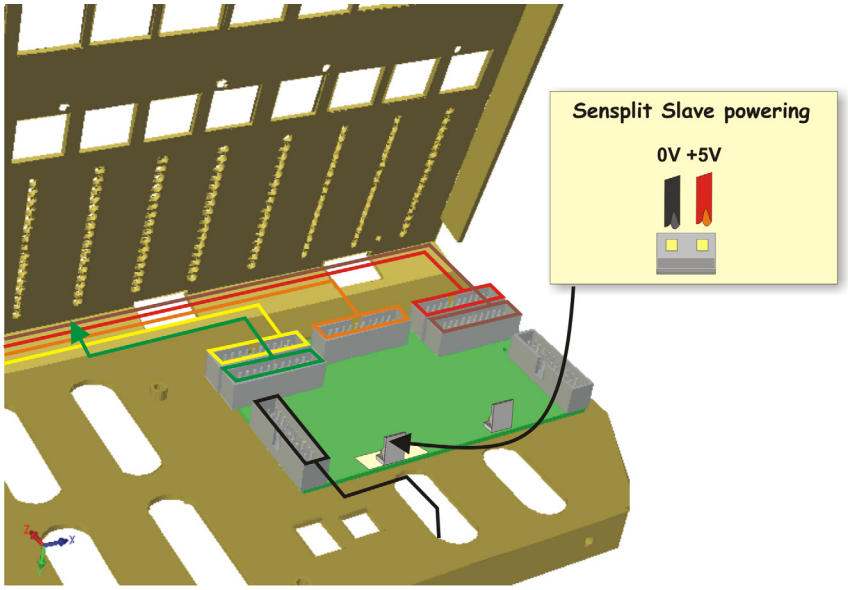

Ribbon to the 1st quadfad of the ModQ6
Ribbon to the 2nd quadfad of the ModQ6
Ribbon to the 3rd quadfad of the ModQ6
Ribbon to the 4th quadfad of the ModQ6
Ribbon to the 5th quadfad of the ModQ6
Ribbon to the Sensplit Master

Nota : The 6th Quadfad of the ModQ6 (last Quadfad of the left module and first Quadfad of the right module) is directly connected to the Sensplit Master. See section for more details.

Find the complete ribbon distribution schematic to the section IV.5

The technical files are confidential and the property of InnovaSON S.A.
Any copy, distribution or use needs our agreement – Please contact our technical support service.

B- The sensplit Master :

The Sensplit Master (or AM186 module) scan all the coders, faders and switchs of the desk and convert their status to serial data destined to the RS-232 PC interface. This module is able to drive up to 3 Sensplit Slave, 2 panels (Channel control and Utilties), and 5 directly connected quadfads. For the Sy40 only 2 Sensplit Slave and 2 directly connected Quadfads are used (12 Quadfads in totality).

▶ *Find the complete ribbon distribution schematic to the **section IV.5***

Location of the Sensplit master module :

As it is shown on the following drawing the Sensplit Master is located under the Channel Control panel.

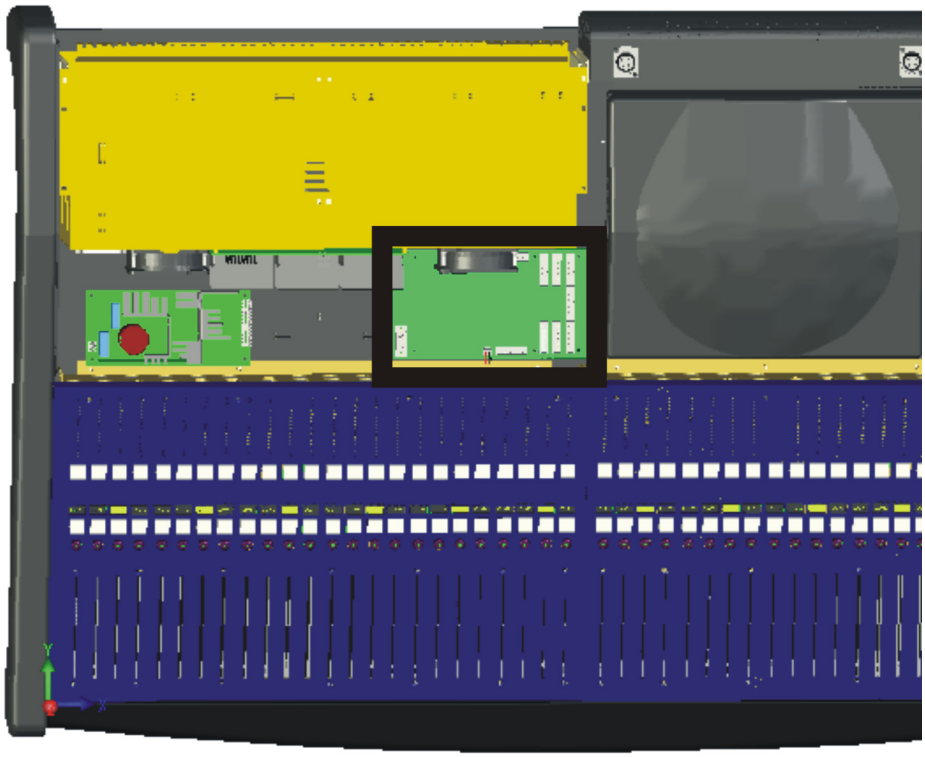

The technical files are confidential and the property of InnovaSON S.A.
Any copy, distribution or use needs our agreement – Please contact our technical support service.

Details about ribbon and power connectors of the Sensplit Master :

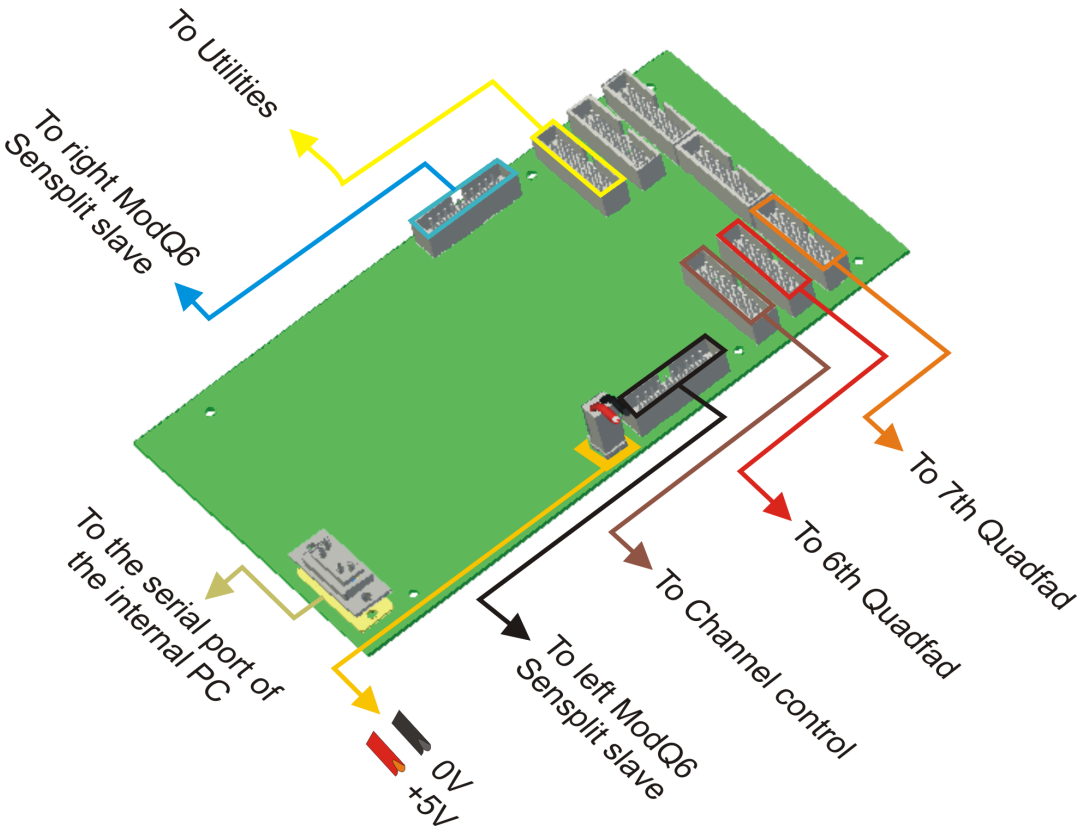

*Find the complete ribbon distribution schematic to the **section IV.5***

II.6 The motorized faders' PSU : NFS110-7612

Two NFS110-7612 are used to provide +12 and –12V for up to 6 Quadfads. Both are installed in the ModQ6 module and cabled in serial, as it is shown below.

These PSU have the particularity to keep high voltage in its capacitor for a very long time after they have been disconnected, so take care of it during their handling….

The technical files are confidential and the property of InnovaSON S.A.
Any copy, distribution or use needs our agreement – Please contact our technical support service.

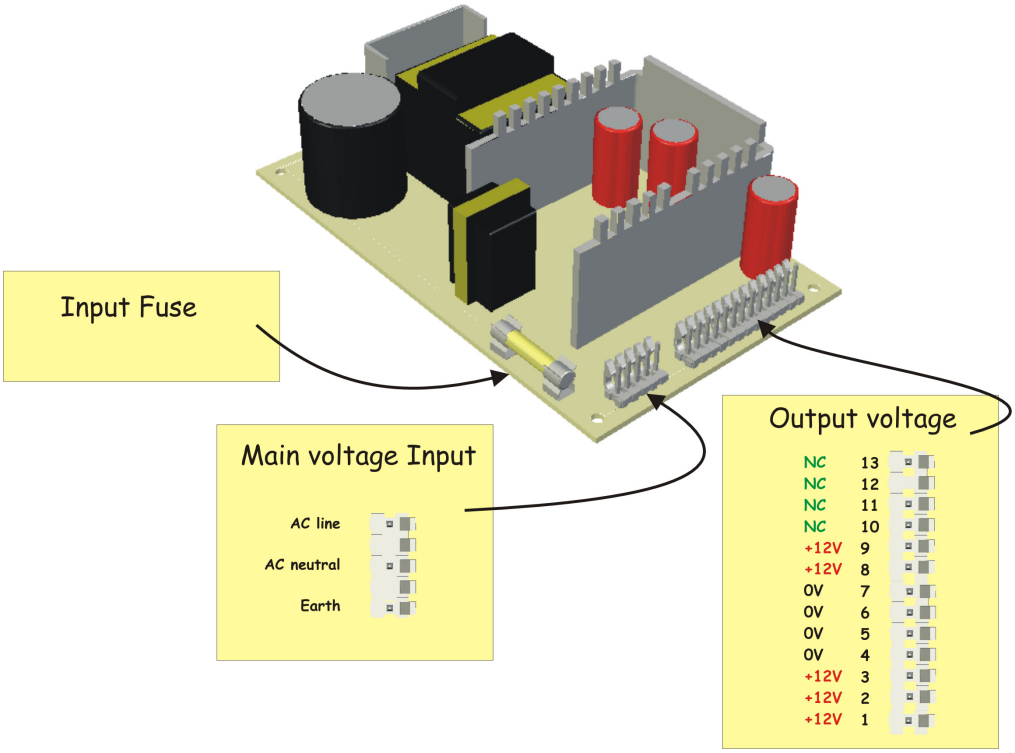

Serial cabling of both NFS110-7612 modules:

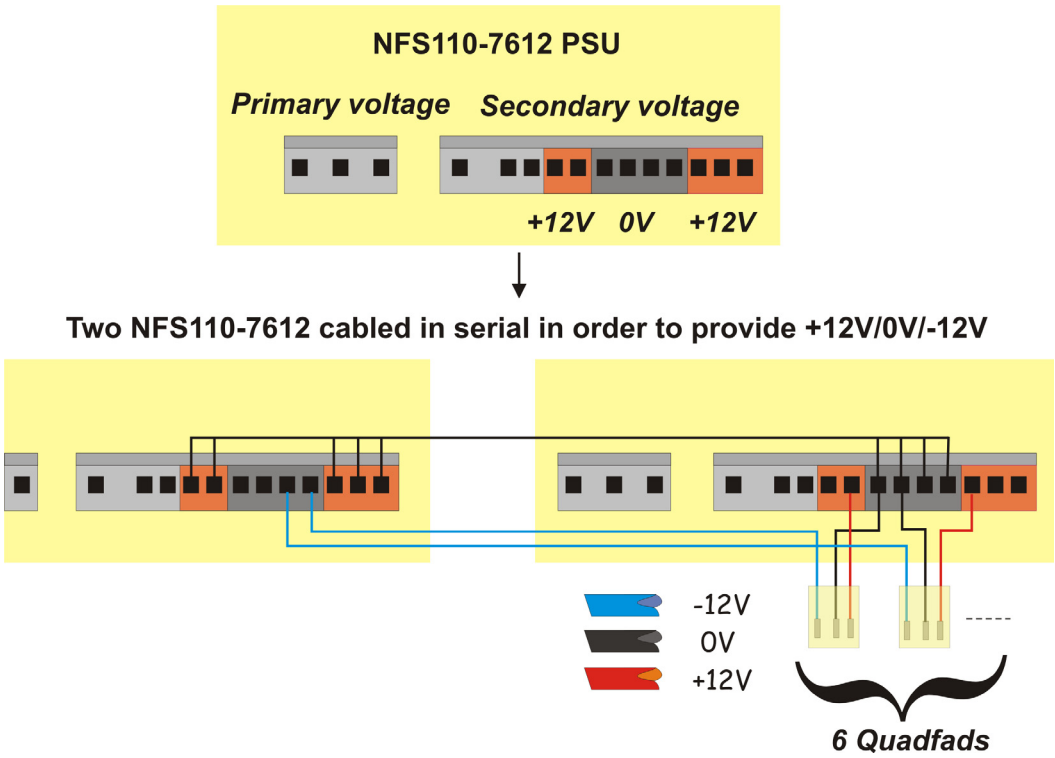

The technical files are confidential and the property of InnovaSON S.A.
Any copy, distribution or use needs our agreement – Please contact our technical support service.

Location of the NFS110-7612 module :

The drawing below shows where the modules are located in each ModQ6.

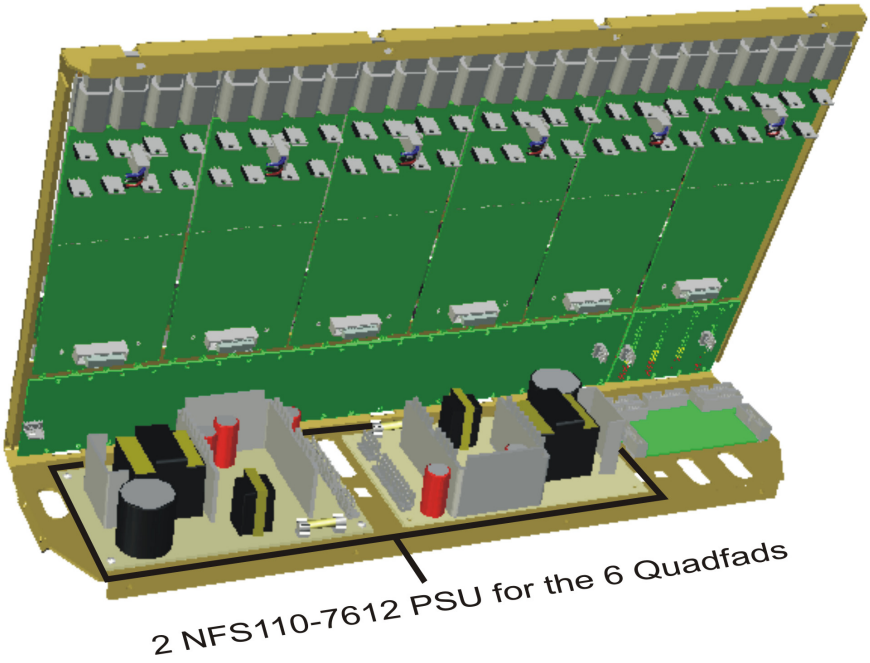

*Find the complete voltage distribution schematic to the **section IV.2***

II.7 The Sensplits, Quadfad's logic and Labels' PSU : NLP40-7605

The NLP40-7605 is located in the bump, on the rear of the desk. It provides +5V for the Sensplits (Master and Slaves), the labels on the desk and the logic devices used on the Quadfads'board.

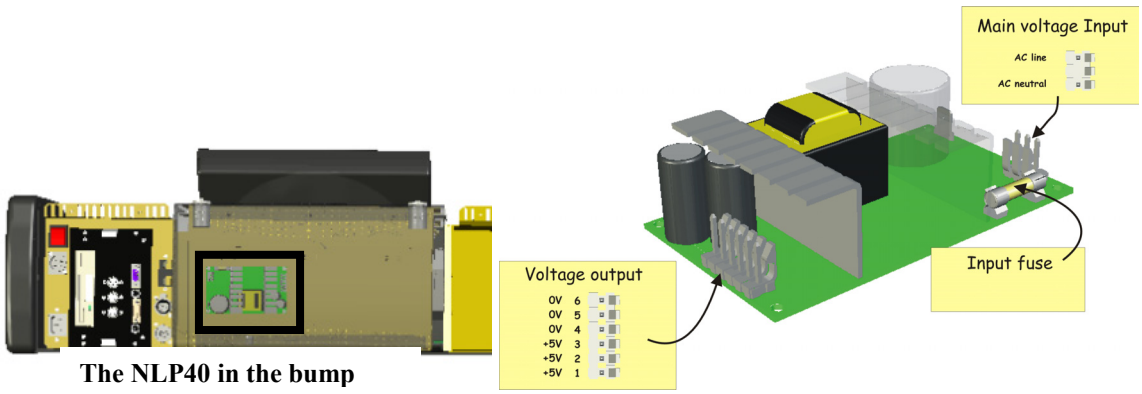

The NLP40 in the bump

*Find the complete voltage distribution schematic to the **section IV.2***

The technical files are confidential and the property of InnovaSON S.A.
Any copy, distribution or use needs our agreement – Please contact our technical support service.

Access to the NLP40-7605 module :

To access to the NLP40 you must remove the Bump. As it is described on the following drawing, 5 screws have to be removed, they're available in the screen housing, with a little screw-driver.

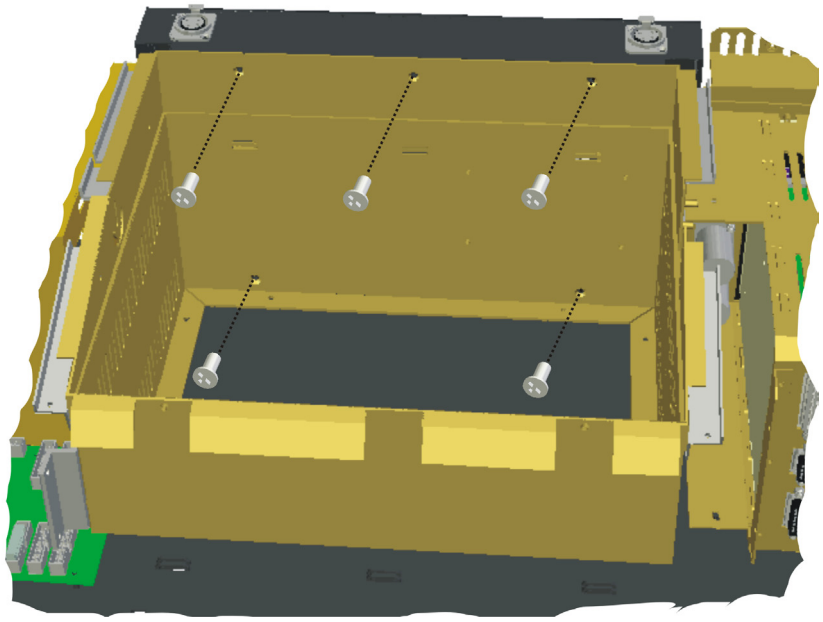

II.8 The internal audio rack

Sy40 has the big particularity to have its own local audio rack integrated and located at the rear of the desk. As it has been mentioned at the beginning of this document, the audio rack provides 2 slots reserved for the processing and the controller modules as well as 6 slots reserved for the I/O modules. All the gamut of the Muxipaire's I/O modules is fully compatible with the Sy40's Audio rack.

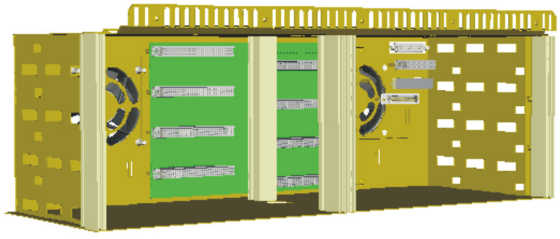

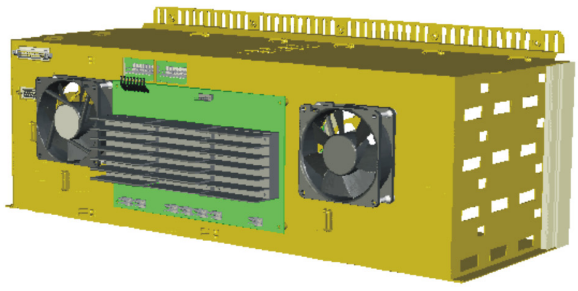

The technical files are confidential and the property of InnovaSON S.A.
Any copy, distribution or use needs our agreement – Please contact our technical support service.

A- The common Bus of the Audio rack :

Thanks to this common bus, the MC-64 is able to control all the other connected modules, as well as the I/O and DSP modules are able to communicate each other.
As it is shown on the following drawing, one Molex 8pts is used to distribute all the requisite voltages.

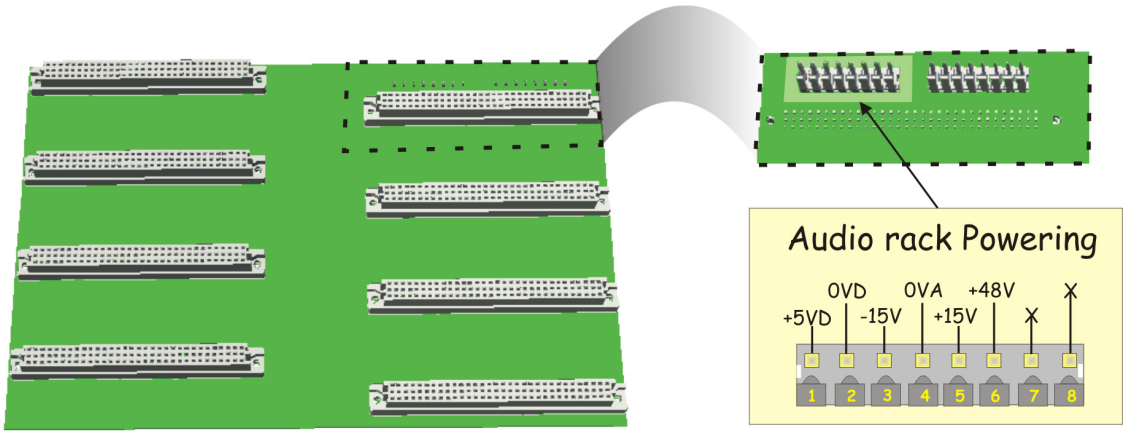

*Find the complete electrical schematic of the common bus to the **section IV.2***

B- MC-64 communication and LED Vu-meters driving

Two Sub-D25 connectors allows the connection between the MC-64 and the parallel port of the PC as well as the communication between the DSP module of the rack and the LED vu-meters on the desk.

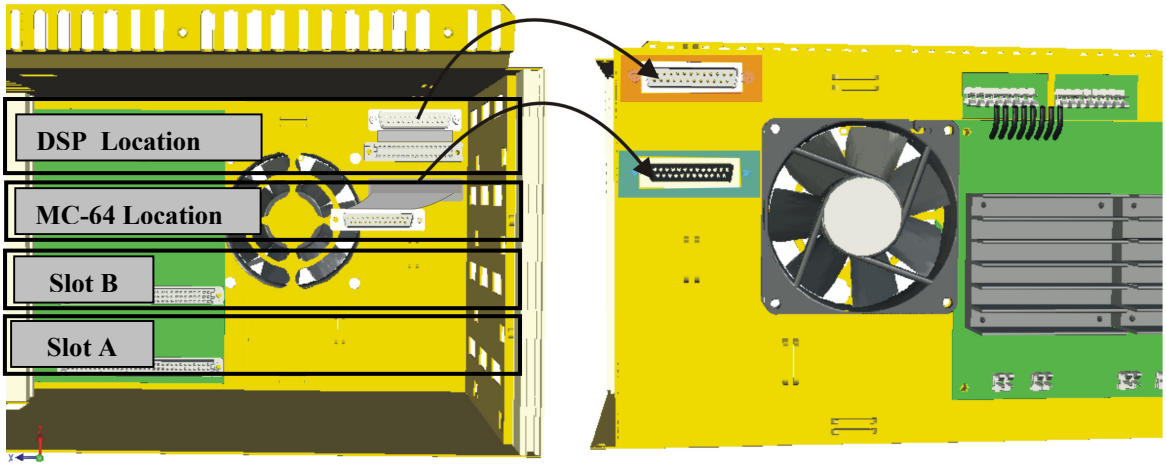

Rear of the console

Rear of the Audio rack, inside the console.

The technical files are confidential and the property of InnovaSON S.A.
Any copy, distribution or use needs our agreement – Please contact our technical support service.



This male Sub-D25 connector distribute the data calculated by the DSP to the vu-meters of the console. Some pins of this connector were also used for the SUB I/O option which was available on the Compact Live series. Despite this option is not available on the Sy40 series, you may find nevertheless the SUB I/O connectors cabled to this SubD25.

▶ *Find the complete detailed Pins assignation to the **Annexes***



This female Sub-D25 connector is directly connected to the parallel port of the PC and allows the communication between the MC-64 controller and Sensoft.

▶ *Find the complete detailed Pins assignation to the **section IV.3***

C- The PSU of the audio rack : IN004A

This PSU is fed by a 48V voltage provided by both NLP110-9624, see the ***section*** for more details.

The IN004A module integrates 3 DC/DC converter for the audio rack and the desk's vu-meters and distributes the necessary power coming from the NLP110-9624 for the fans of the console.

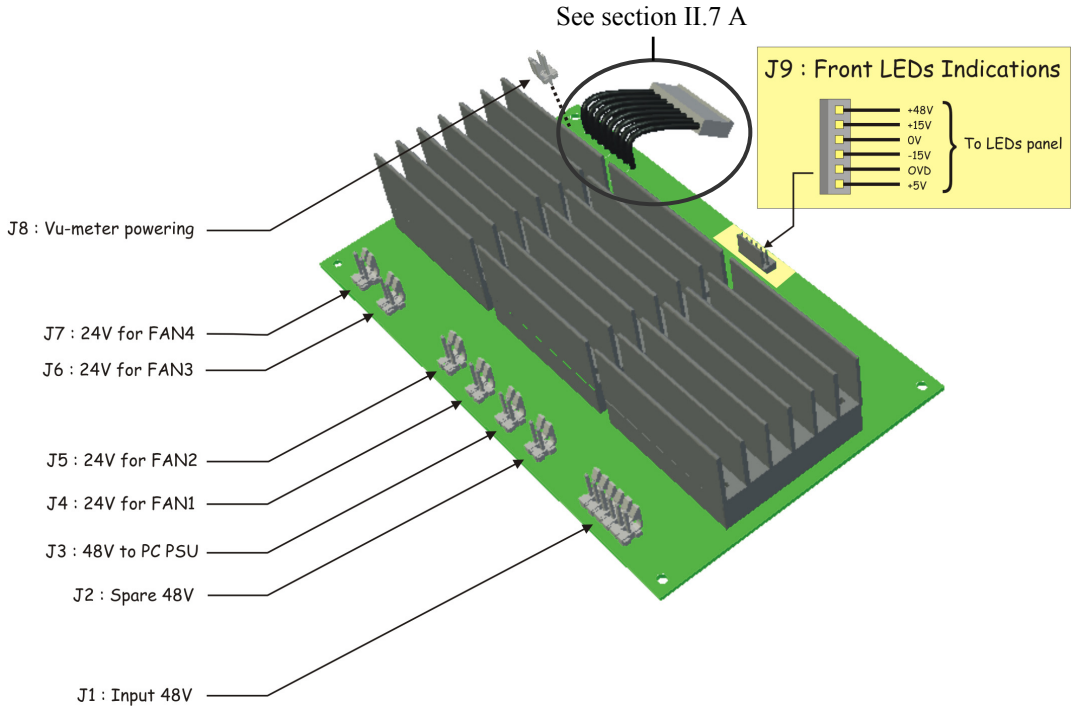

▶ *Find the complete electrical schematic of the IN004A module to the **Annexes***

The technical files are confidential and the property of InnovaSON S.A.
Any copy, distribution or use needs our agreement – Please contact our technical support service.

D- The front LED panel of the audio rack : IN005A

The front LED module is a little card installed directly on the Channel control module. It allows to have permanently a status of the Audio rack's necessary voltages.

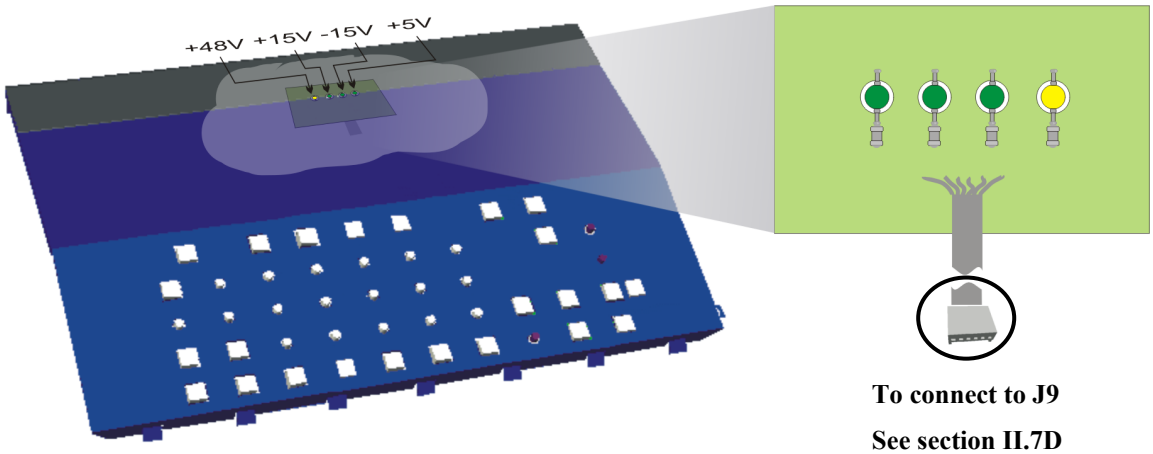

▶ *Find the complete electrical schematic of the IN005A module to the **Annexes***

II.9 The 48V powering : NLP110-9624

Two 24 PSU modules, cabled in serial, are used to provide the 48V necessary to the Adio rack and the PC's PSU. These modules are the NLP110-9624. They are located on the left side, as shown in the following drawing.

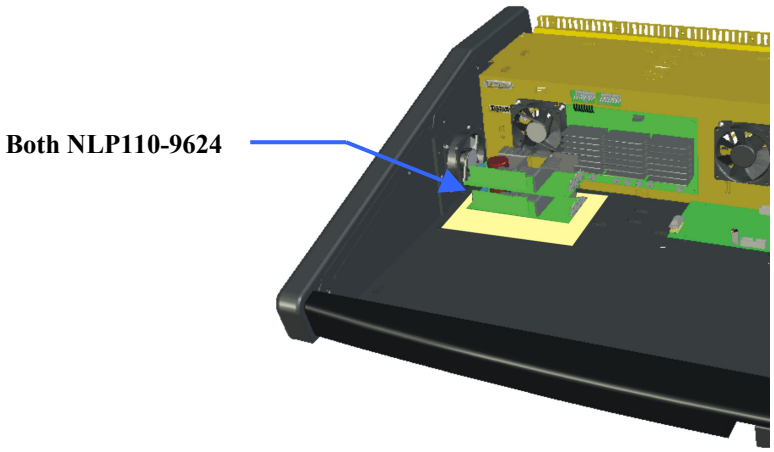

The technical files are confidential and the property of InnovaSON S.A.
Any copy, distribution or use needs our agreement – Please contact our technical support service.

Connectors and pins assignment :

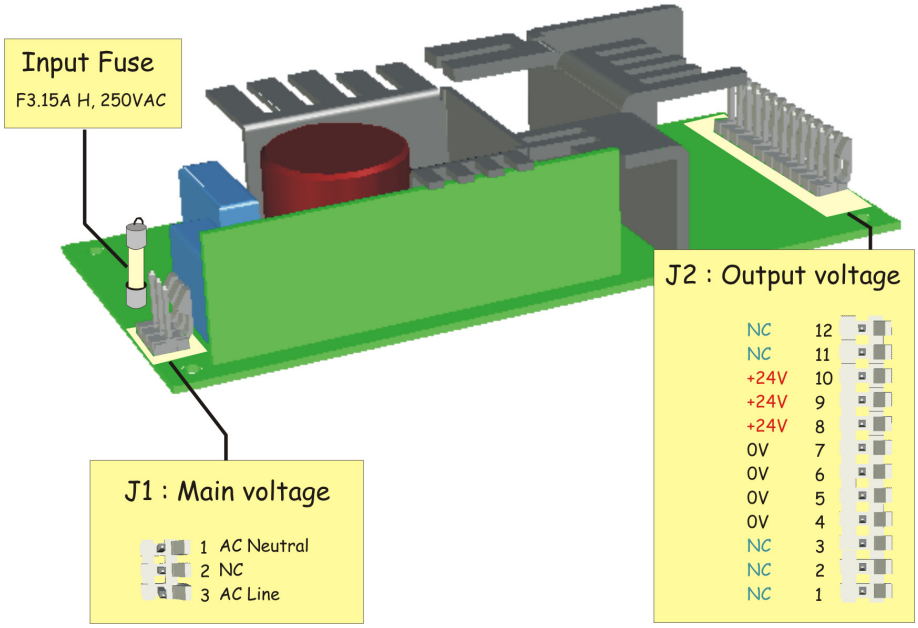

Find the complete voltage distribution schematic to the ***sectionIV.2***

II.10 The PC module

The PC module is installed into the back of the desk, it communicates with the Audio rack thru its Parallel port and with the Desk (the Sensplit master) thru its Serial port. It is equipped of MIDI connections (IN, OUT and Thru).

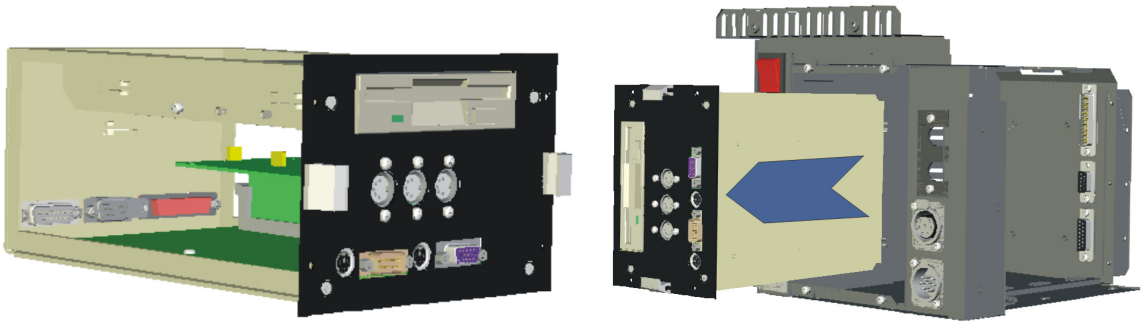

The technical files are confidential and the property of InnovaSON S.A.
Any copy, distribution or use needs our agreement – Please contact our technical support service.



In the majority of the cases you'll have to remove only 4 screws to remove the PC. But if you see this sticker on the front of the PC that means that you have to remove also the Utilities module (see section II.2) in order to accede to the internal nut which ensure a good contact between the connectors of the PC and its housing.

The drawing, below, shows where is this nut. As you can see, it's sited on the SubD9 connector of the back of the PC's housing.

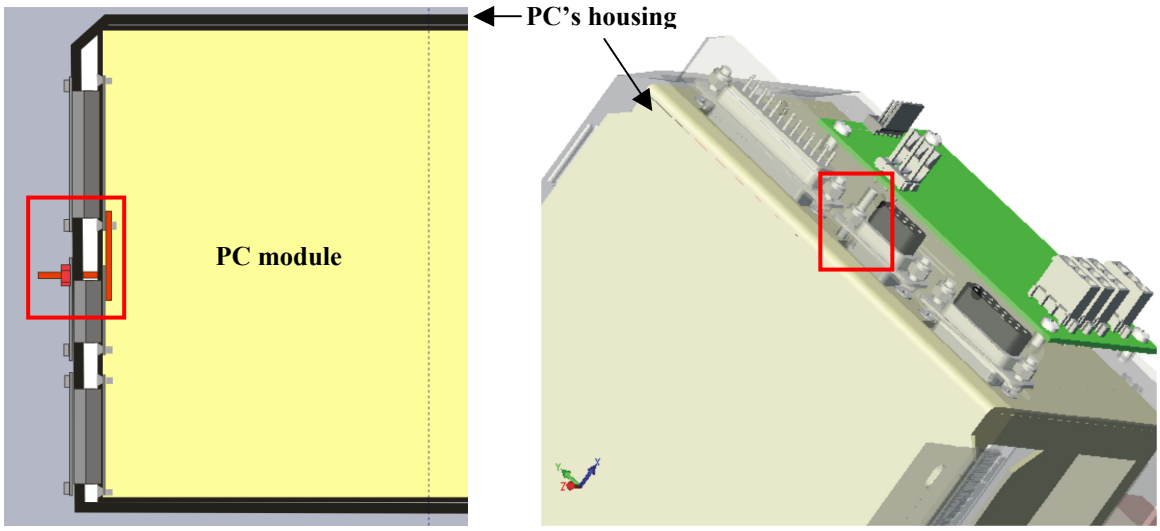

Disassembly of the PC module :

The following procedure and drawings explain how to disassemble the PC in order to accede to its different parts :

1- Four screws are to be removed in order to withdraw the front panel. Take care to disconnect the little ribbon cable of the MIDI connector before removing the panel.
2- Disconnect and remove (4 screws) the floppy disk driver.
3- Remove the 2 screws and disconnect very carefully the MIDI board.
4- You can now accede to the main components of the PC board.

The technical files are confidential and the property of InnovaSON S.A.
Any copy, distribution or use needs our agreement – Please contact our technical support service.

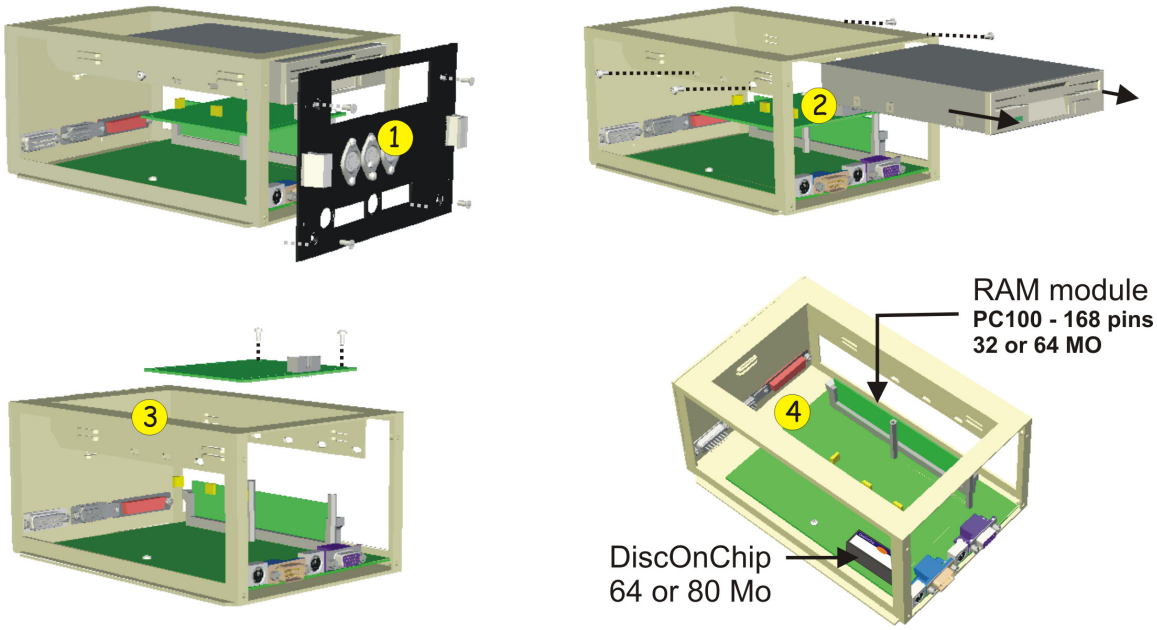

The PC board in details :

The following drawing shows the main configurations of the jumpers and exchangeable parts of the mother board PIA-671.

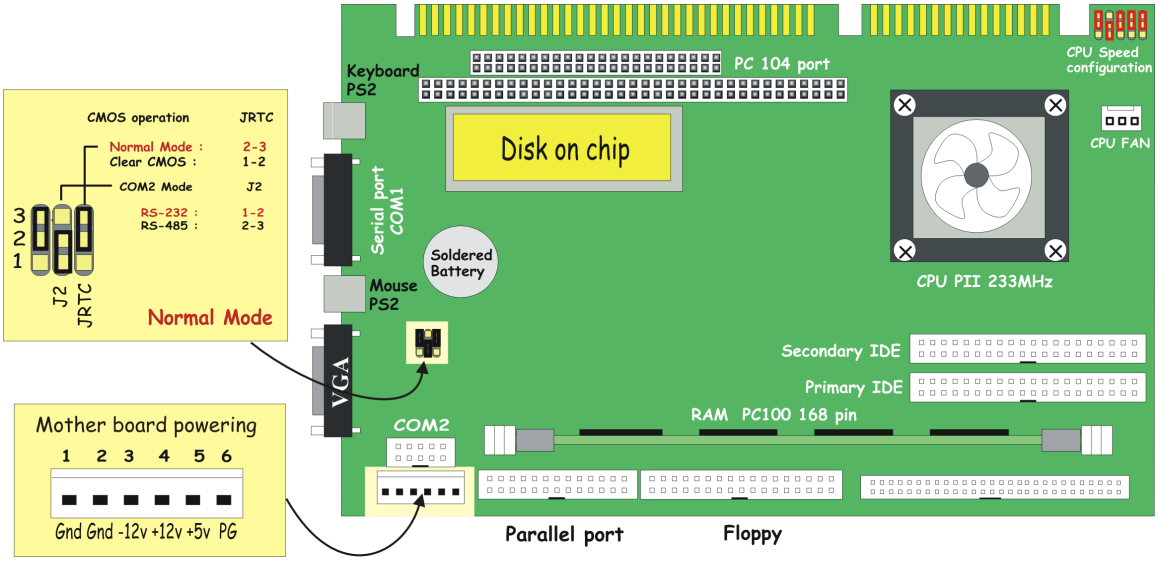

Find the complete schematic of the PC cabling to the ***section IV.3***

The technical files are confidential and the property of InnovaSON S.A.
Any copy, distribution or use needs our agreement – Please contact our technical support service.

The MIDI board in details :

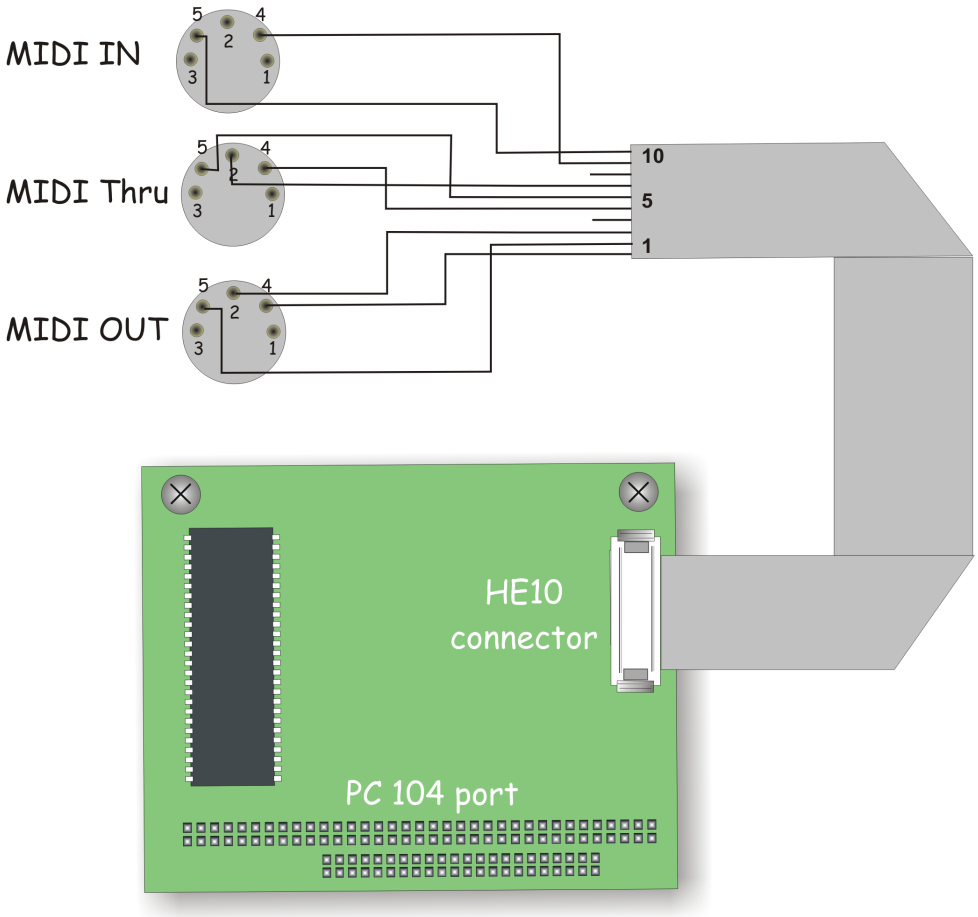

II.11 The PC's PSU and front LED of the PC: ACE-870T & IN005A

A- PC powering

The ACE-870T provide all the necessary voltages to the PIA-671 mother board, the floppy driver and the LCD screen. It is located at the right side of the desk, as it is shown on the following drawing :

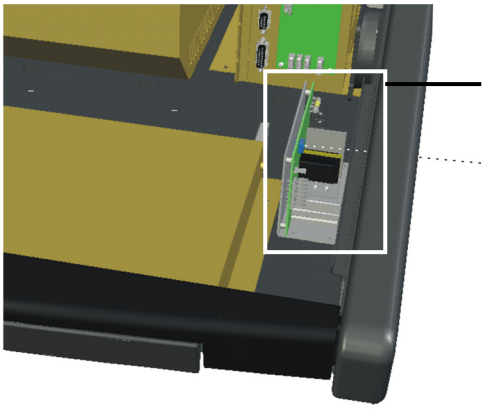

The ACE-870T PSU

A little hole in the chassis allows to adjust, with a screw drivers, the output voltages.

The technical files are confidential and the property of InnovaSON S.A.
Any copy, distribution or use needs our agreement – Please contact our technical support service.

To accede to this module you must first remove the Utilities panel and the left ModQ6 module, ***see section II.2*** and ***section II.3B*** to have some explanations about it.

PWS Connectors and pins assignment :

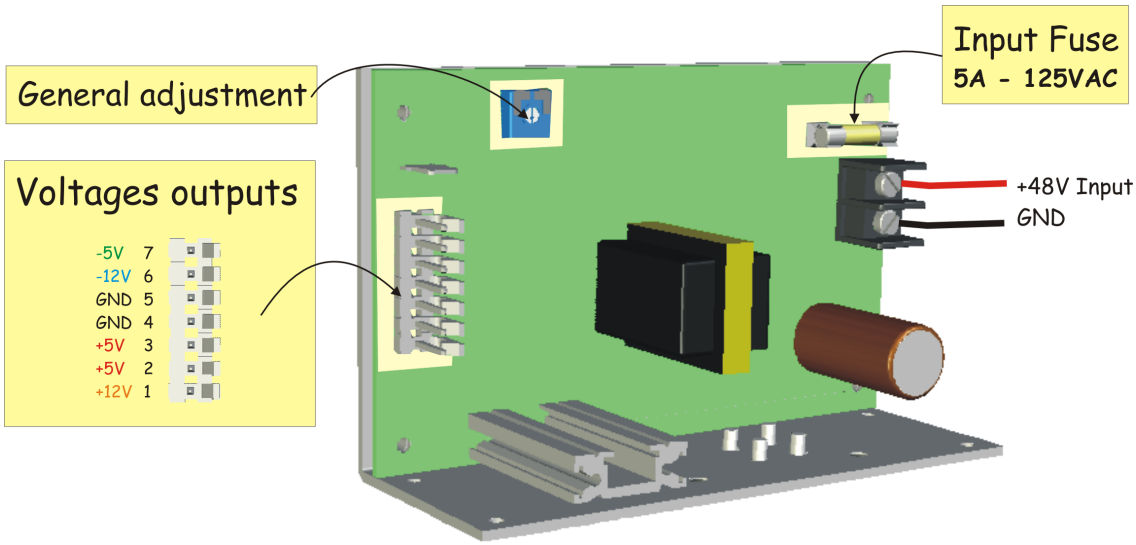

*Find the complete voltage distribution schematic to the **section IV.2***

B- The PC's INOO5A

The front LED module is a little card installed directly on the Utilities module. It allows to have permanently a status of the PC's necessary voltages.

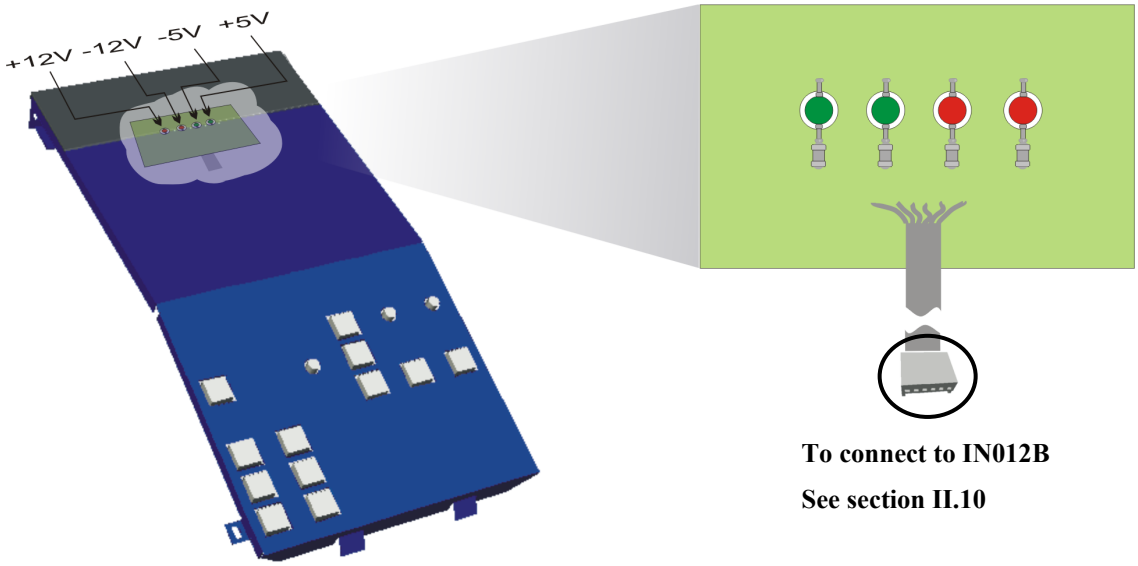

*Find the complete electrical schematic of the IN005A module to the **Annexes***

The technical files are confidential and the property of InnovaSON S.A.
Any copy, distribution or use needs our agreement – Please contact our technical support service.

II.12 The PWS distributor : IN012B

This board distributes the main voltage to the different PSU in the console as well as the voltages generated by the ACE-870T to the SubD15 of the PC housing (+12, -12 and +5V for the PC) and to the LCD screen. As it is shown on the following drawing, this board is located and fixed on the back of the PC's housing.

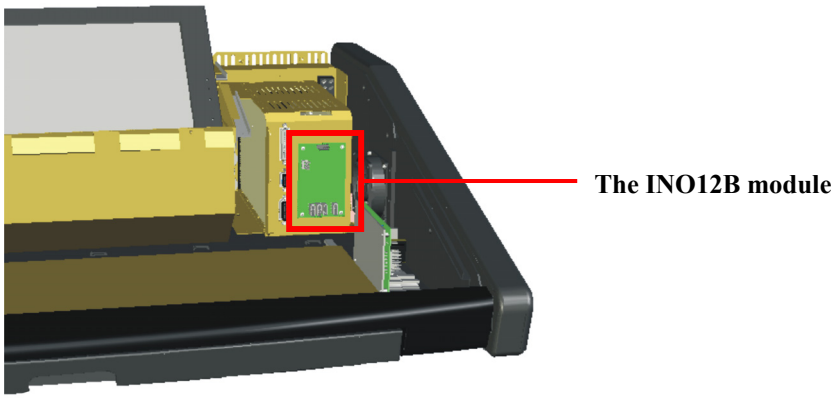

Connectors and pins assignment :

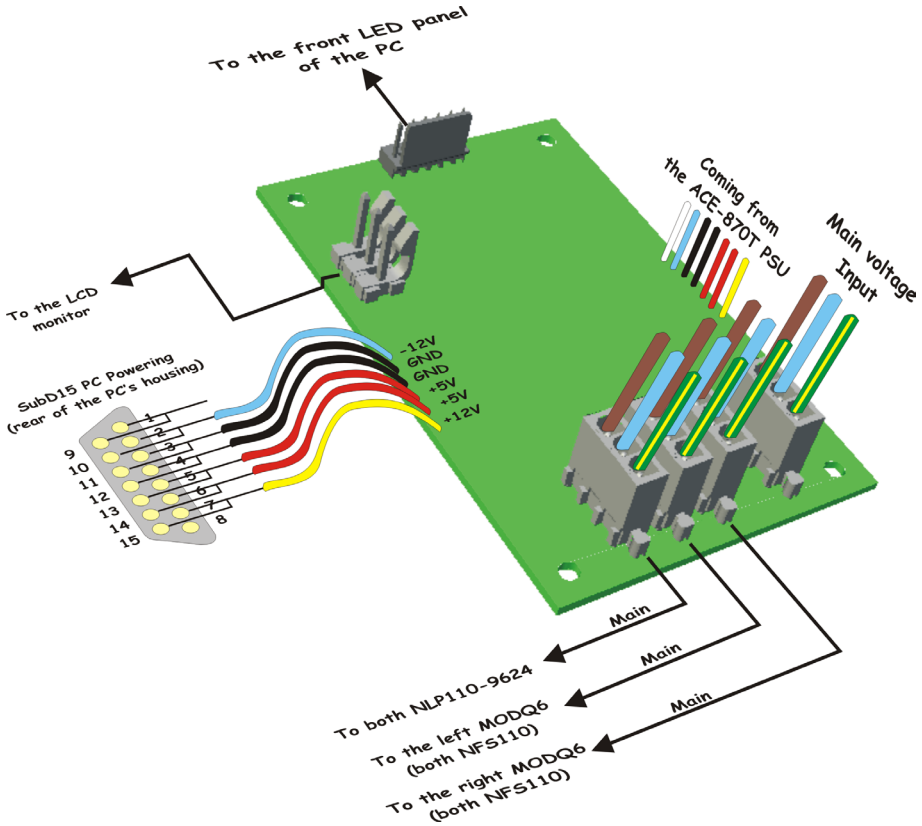

Find the complete voltage distribution schematic to the ***section IV.2***

The technical files are confidential and the property of InnovaSON S.A.
Any copy, distribution or use needs our agreement – Please contact our technical support service.

II.13 The LCD Screen

Disassembly of the LCD module :

The following procedure describe the different steps to accede to the LCD screen, in case of exchange or repair. Before, please refer to the sections II.1 and II.2 to remove the Channel control and Utilities panels.

1- Remove the left blocking piece, 3 nuts have to be withdrawn.

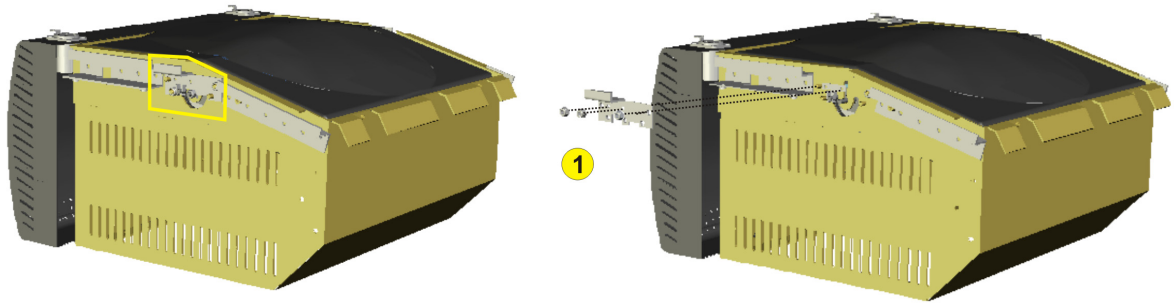

2- Remove the top lateral screws of the plastic shell and, thanks to the fact that the blocking piece in step one has been withdrawn, you can accede to and remove the bottom lateral screws.

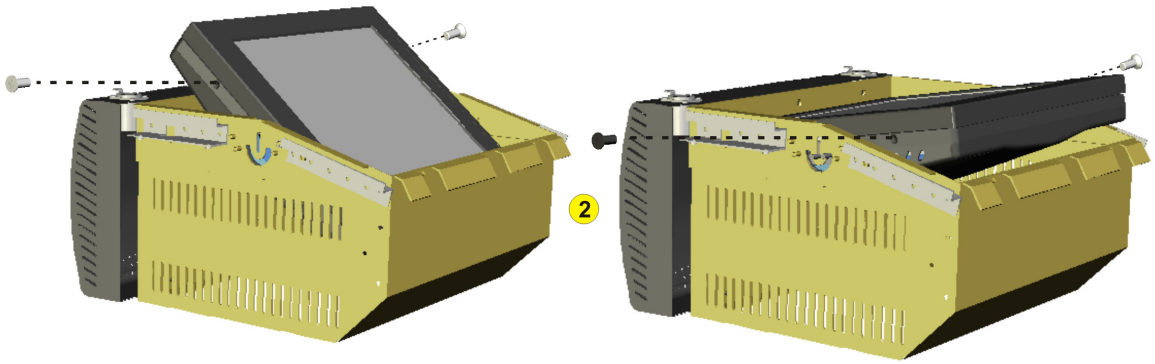

3- Remove the rear shell and remove the 4 screws fixing the front plastic shell.

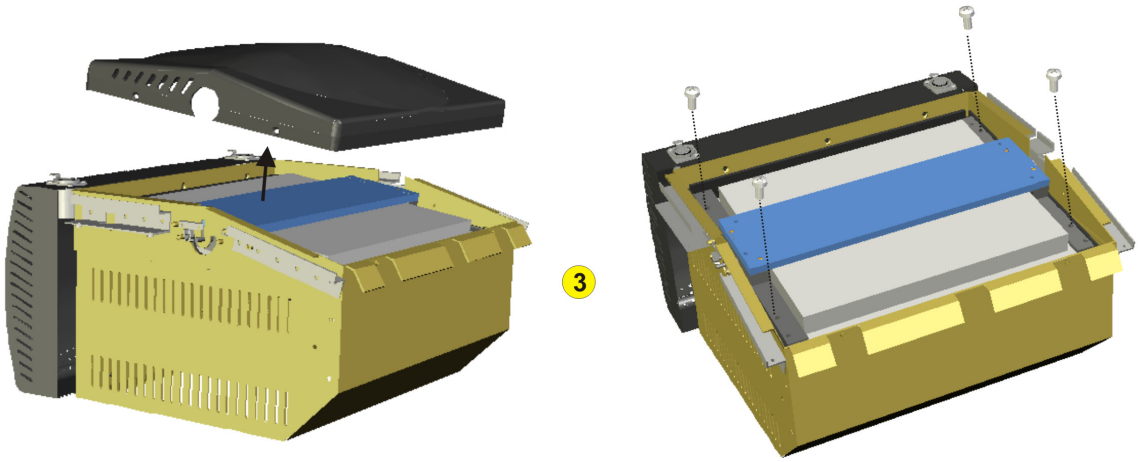

The technical files are confidential and the property of InnovaSON S.A.
Any copy, distribution or use needs our agreement – Please contact our technical support service.

4- Remove the front shell and the 4 screws fixing the LCD screen.

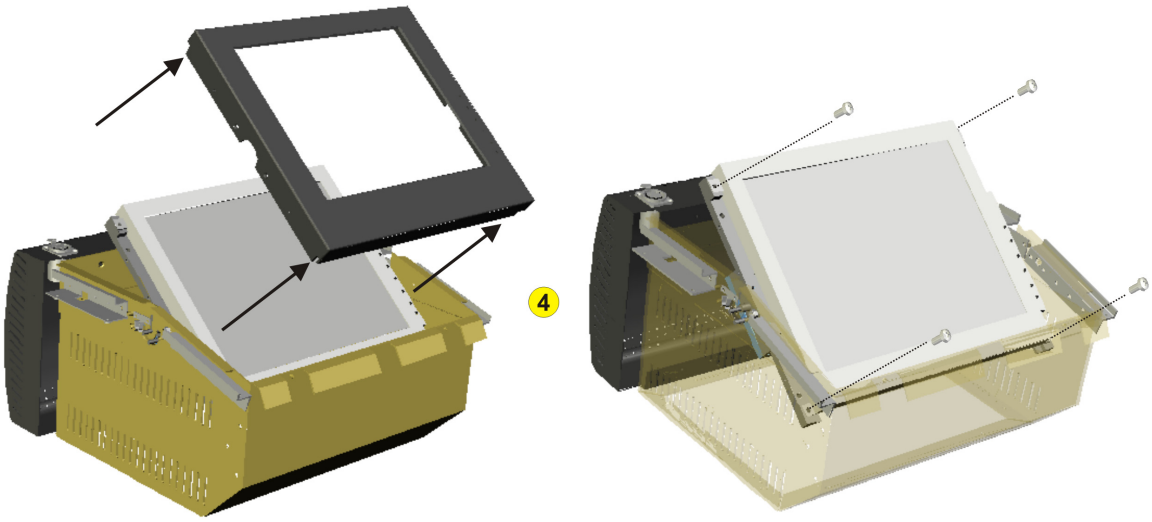

5- You can now remove the LCD screen, take care of the SVGA and PSU connectors removal.

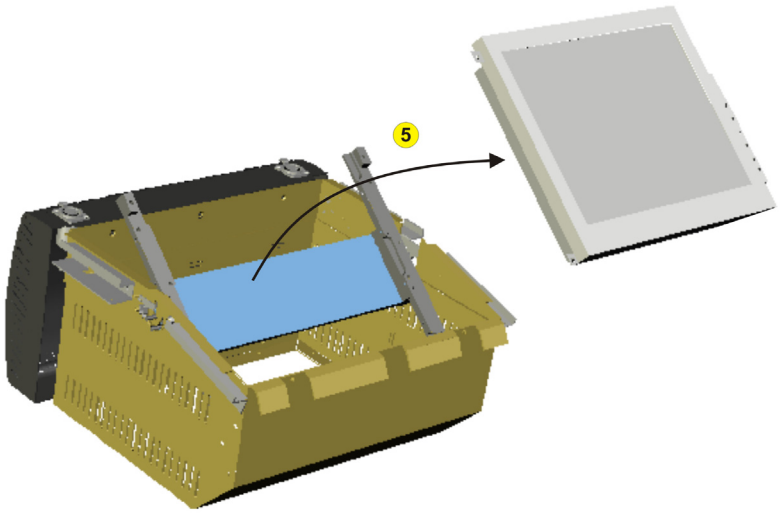

Adjustment of the LCD module (picture setting and spinning hardness) :

- Some adjustment switchs are available on the right side of the screen, please refer to the LCD's user manual delivered with the console. To have the best setting for Sensoft we strongly recommend to set the screen on its "Auto Range" mode.

The technical files are confidential and the property of InnovaSON S.A.
Any copy, distribution or use needs our agreement – Please contact our technical support service.

- It's possible to adjust the spinning hardness of the screen by adjusting the tightening of axe's nut like described on the following drawings :

Left blocking piece **Right blocking piece**

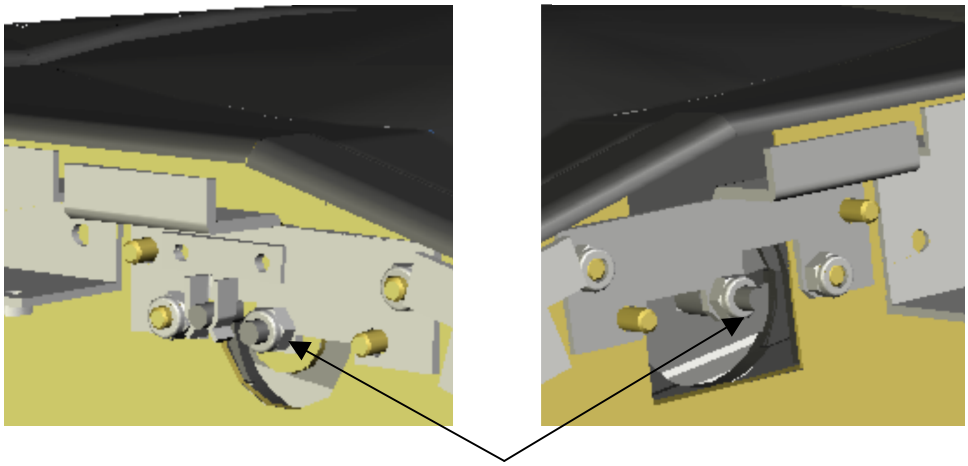

Act on those nuts to adjust the spinning hardness.

II.14 The Keyboard and mini-trackball

The keyboard is sited in a drawer located at the right of the desk. It is fixed with a Velcro, so to remove it you just have to push it with your fingers in the holes intended for this use.



Some holes are intended to ease the keyboard's removal.

*Find the complete schematic of the PC cabling to the **section IV.3***

The technical files are confidential and the property of InnovaSON S.A.
Any copy, distribution or use needs our agreement – Please contact our technical support service.

III. The air cooling : flow and powering

III.1 Air flow

The following drawing shows show the air flow in the console. To be efficient the fans mustn't have any obstruction on their air flow. So please do not cover the console during its functioning.

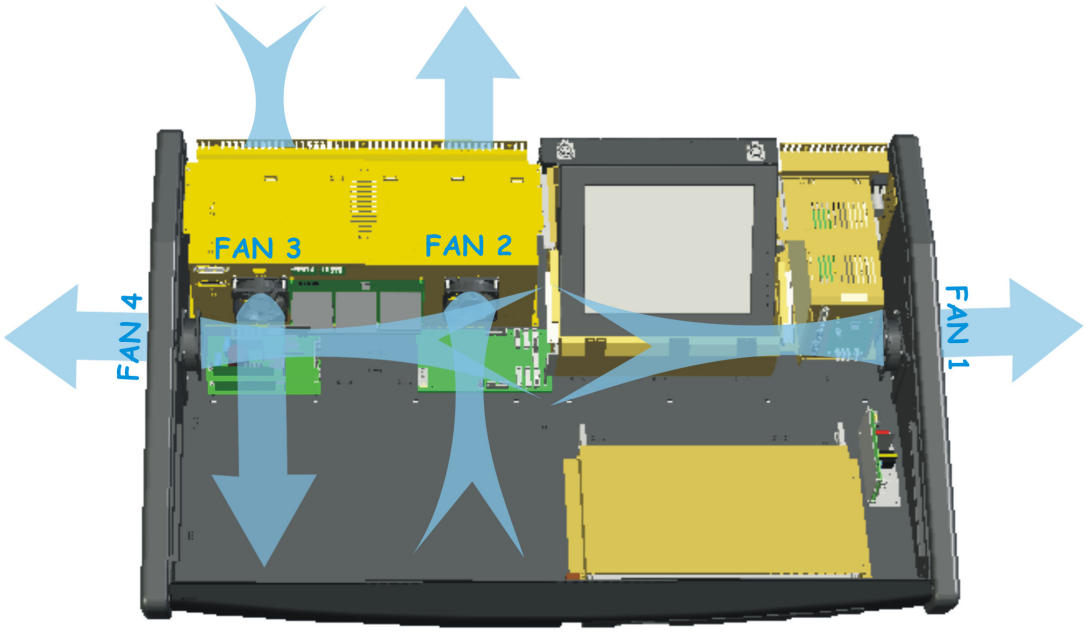

It the console is used in a part of its fly case, take care of the space between panels and the fans, **all obstruction between air and the fans could be very damageable for the console**.

III.2 Fans powering

Fans 1,2 and 3 are Paps 8414 NGL models (0,7W/24V), fan 4 is a Paps 8414NG (2W/24V). The fans are cabled in serial : fan 1 in serial with fan 2, fan 3 in serial with fan 4. As fan 4 has some different electric characteristics than fan 3, a resistor of 1.2KΩ/1W is cabled in parallel with fan 3 in order to limit its current.

The technical files are confidential and the property of InnovaSON S.A.
Any copy, distribution or use needs our agreement – Please contact our technical support service.

Each connector of the INN004A module (*see section II.8C*) provide a 24V voltage for the fans. These 24V voltages are coming from both **NLP110-9624** PSU (*see section II.9* for details about these modules).

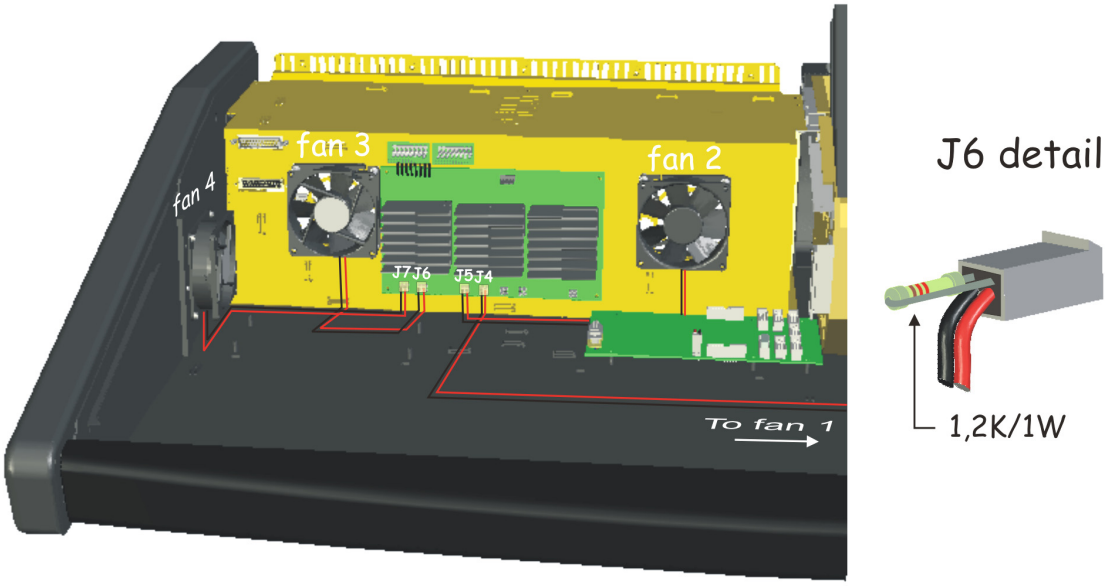

The technical files are confidential and the property of InnovaSON S.A.
Any copy, distribution or use needs our agreement – Please contact our technical support service.

IV. Cabling plans

IV.1 Power distribution from main voltage to others modules

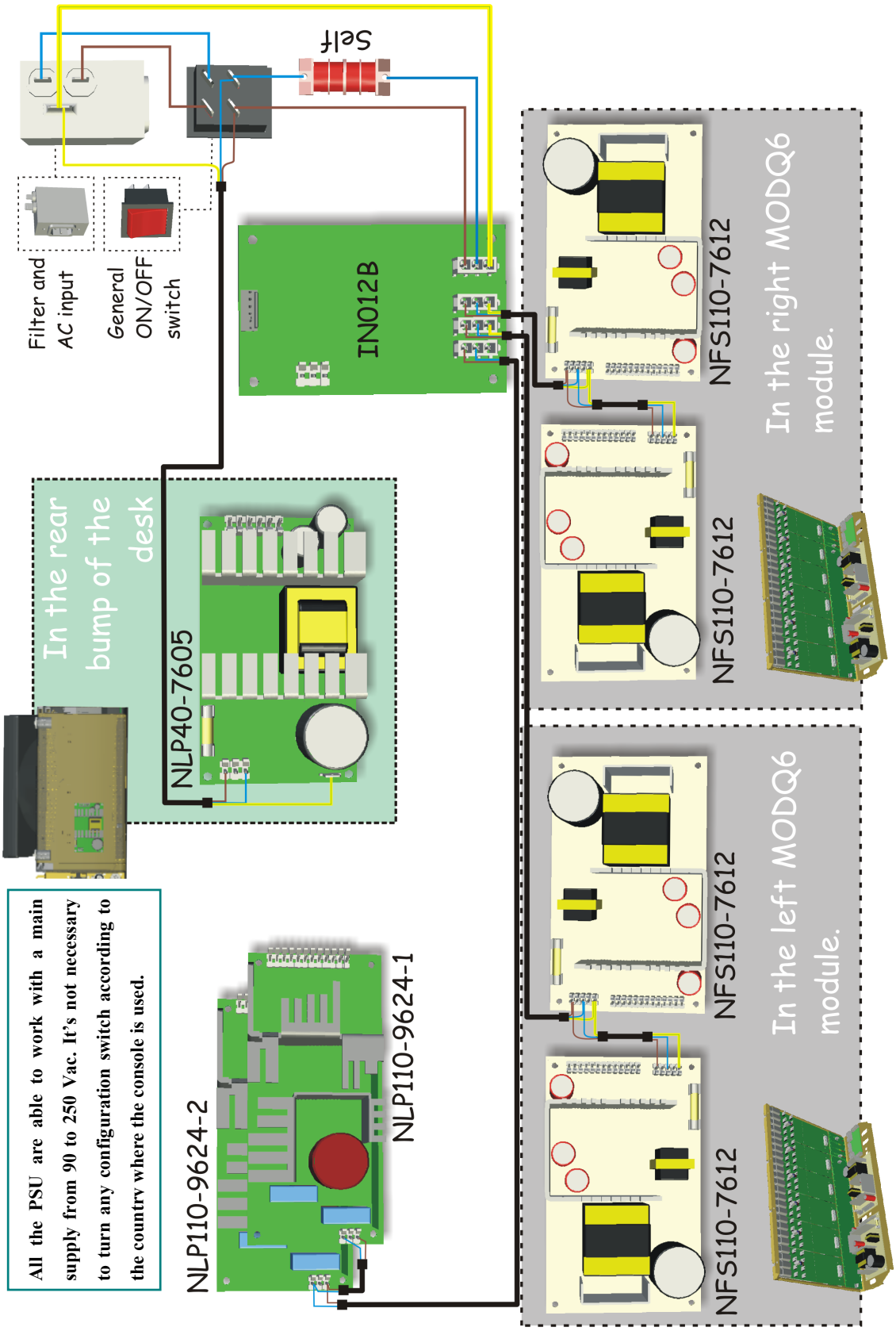

The technical files are confidential and the property of InnovaSON S.A.
Any copy, distribution or use needs our agreement – Please contact our technical support service.

IV.2 DC voltages distribution

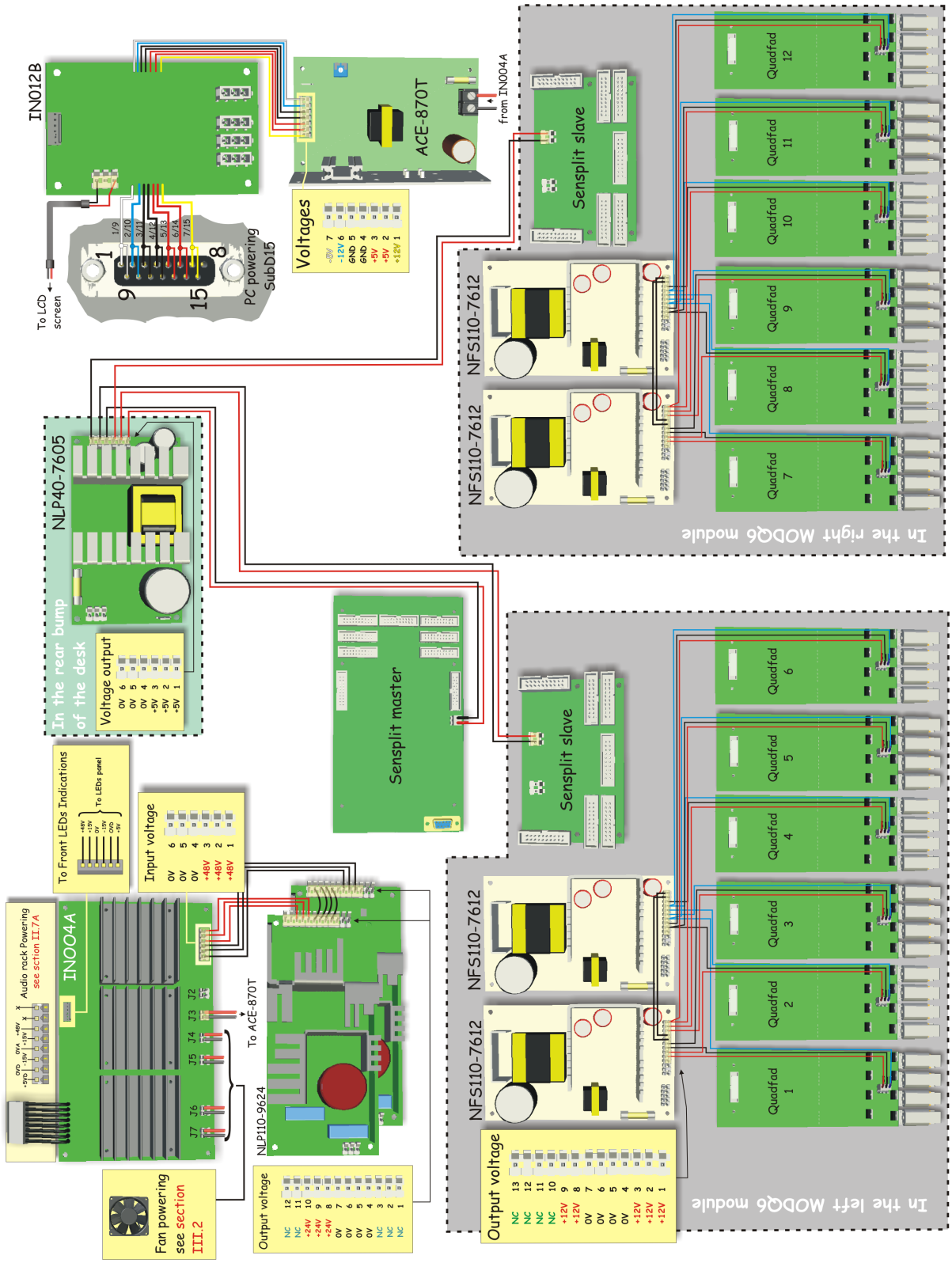

The technical files are confidential and the property of InnovaSON S.A.
Any copy, distribution or use needs our agreement – Please contact our technical support service.

IV.3 Cabling of the PC

It's forecast to connect an external PC instead of the internal one, in case of breakdown. To do it, just disconnect the PC module and, in the PC's housing, connect the external lap top with a Parallel cable (SubD25 pin to pin) and a serial cable (SubD9 pin to pin).

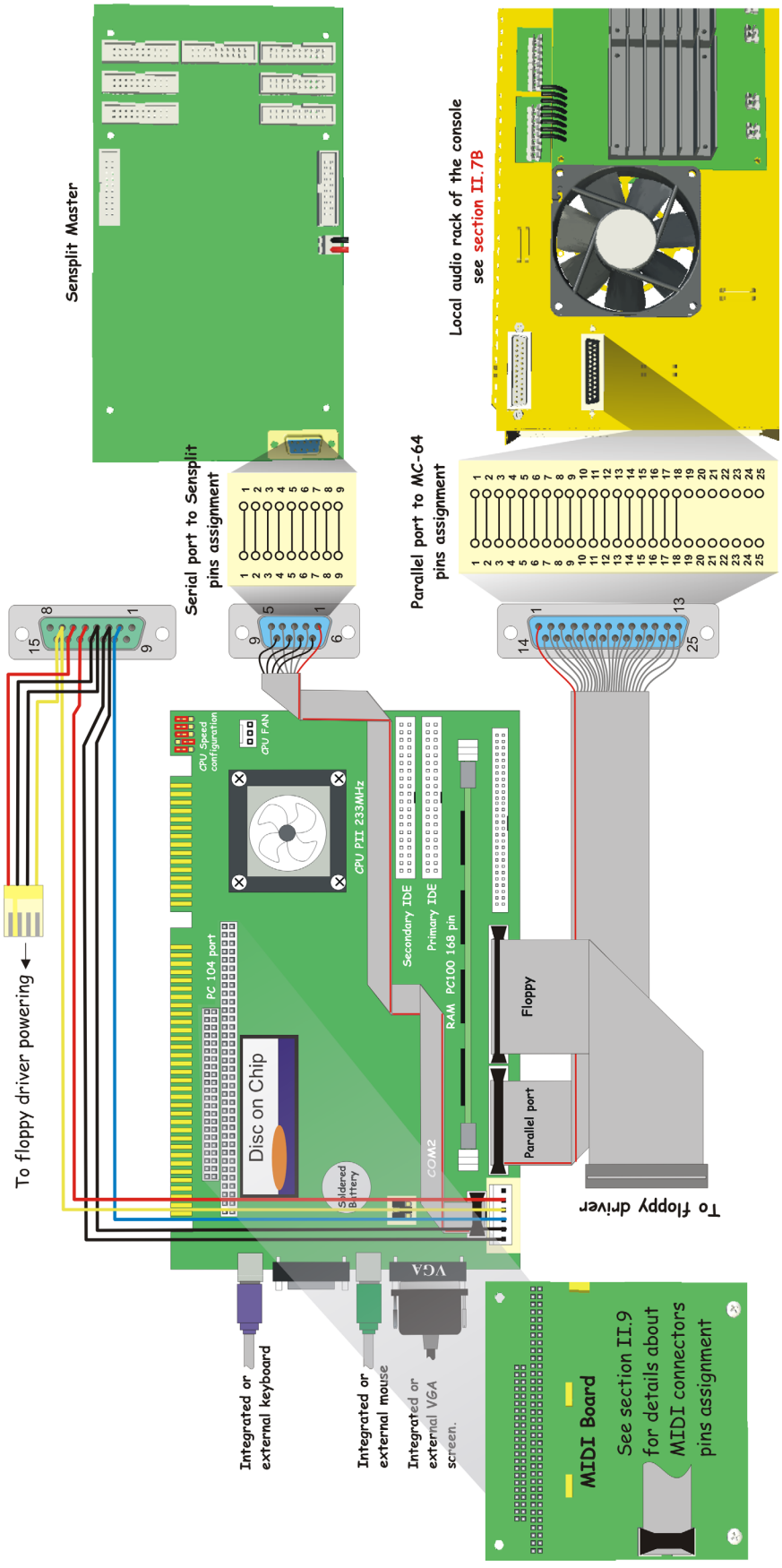

The technical files are confidential and the property of InnovaSON S.A.
Any copy, distribution or use needs our agreement – Please contact our technical support service.

IV.4 Vu-meters modules : cabling and powering

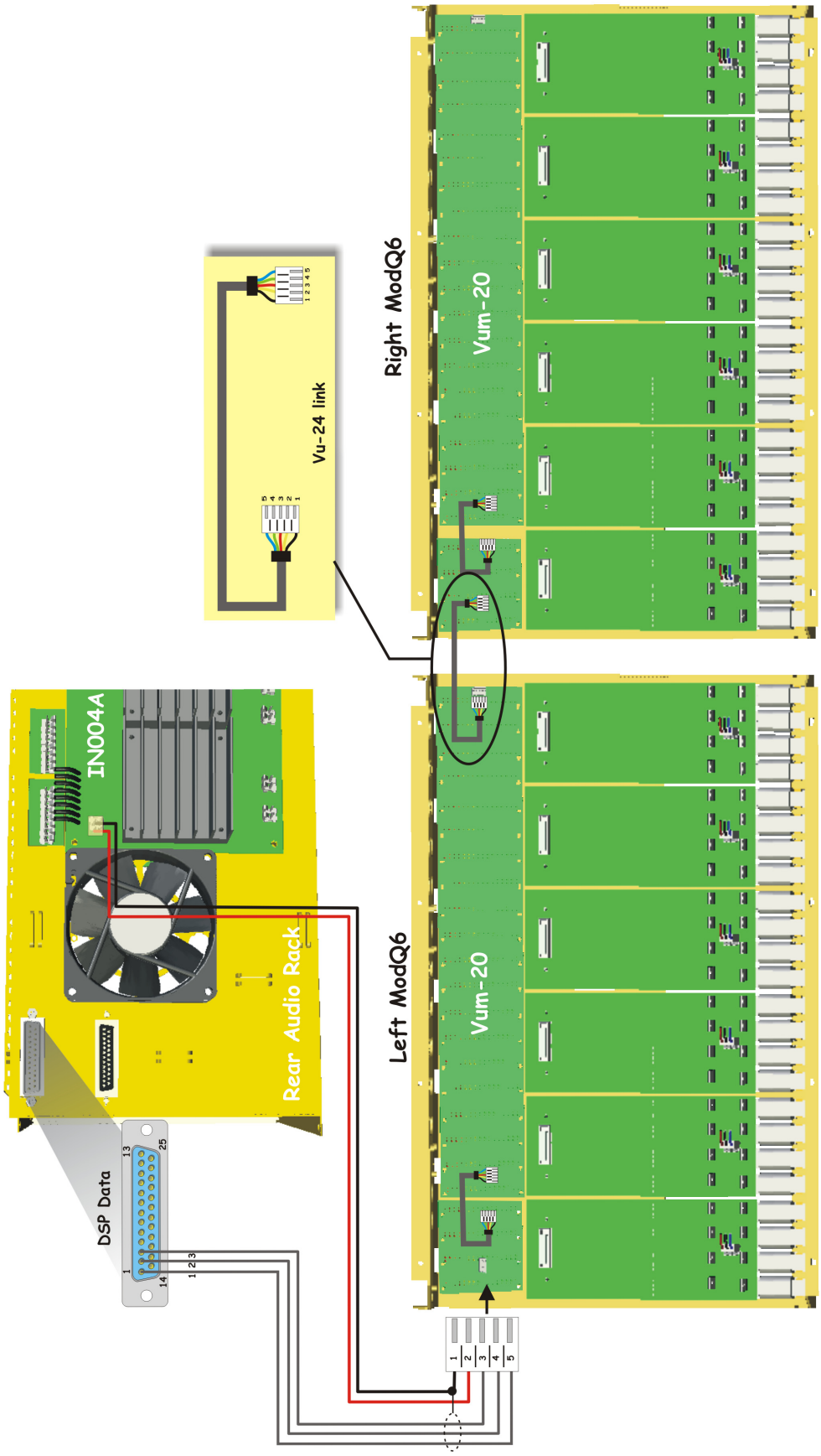

The technical files are confidential and the property of InnovaSON S.A.
Any copy, distribution or use needs our agreement – Please contact our technical support service.

IV.5 Ribbons cabling : Sensplits, Quadfads and panels

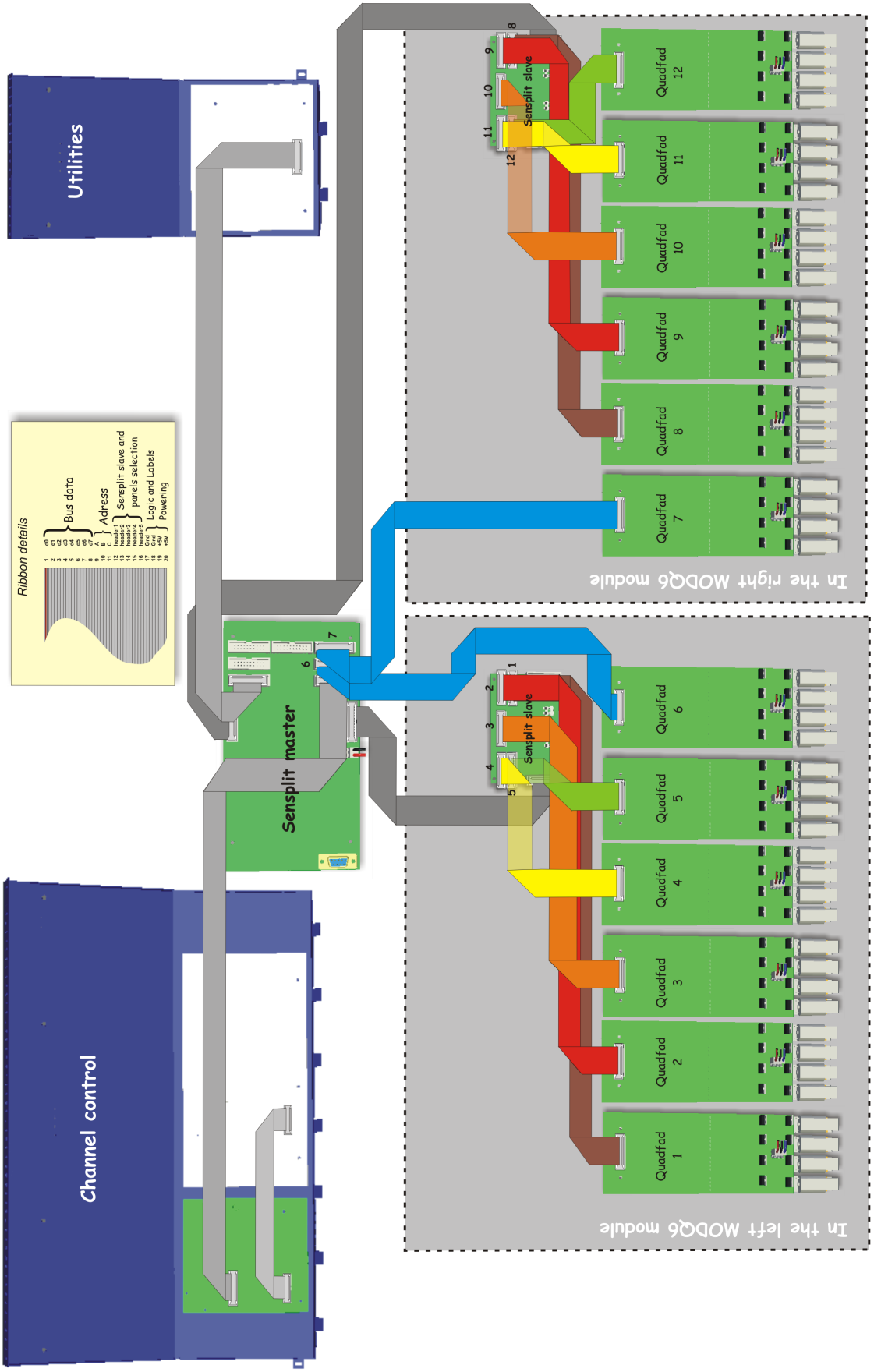

The technical files are confidential and the property of InnovaSON S.A.
Any copy, distribution or use needs our agreement – Please contact our technical support service.

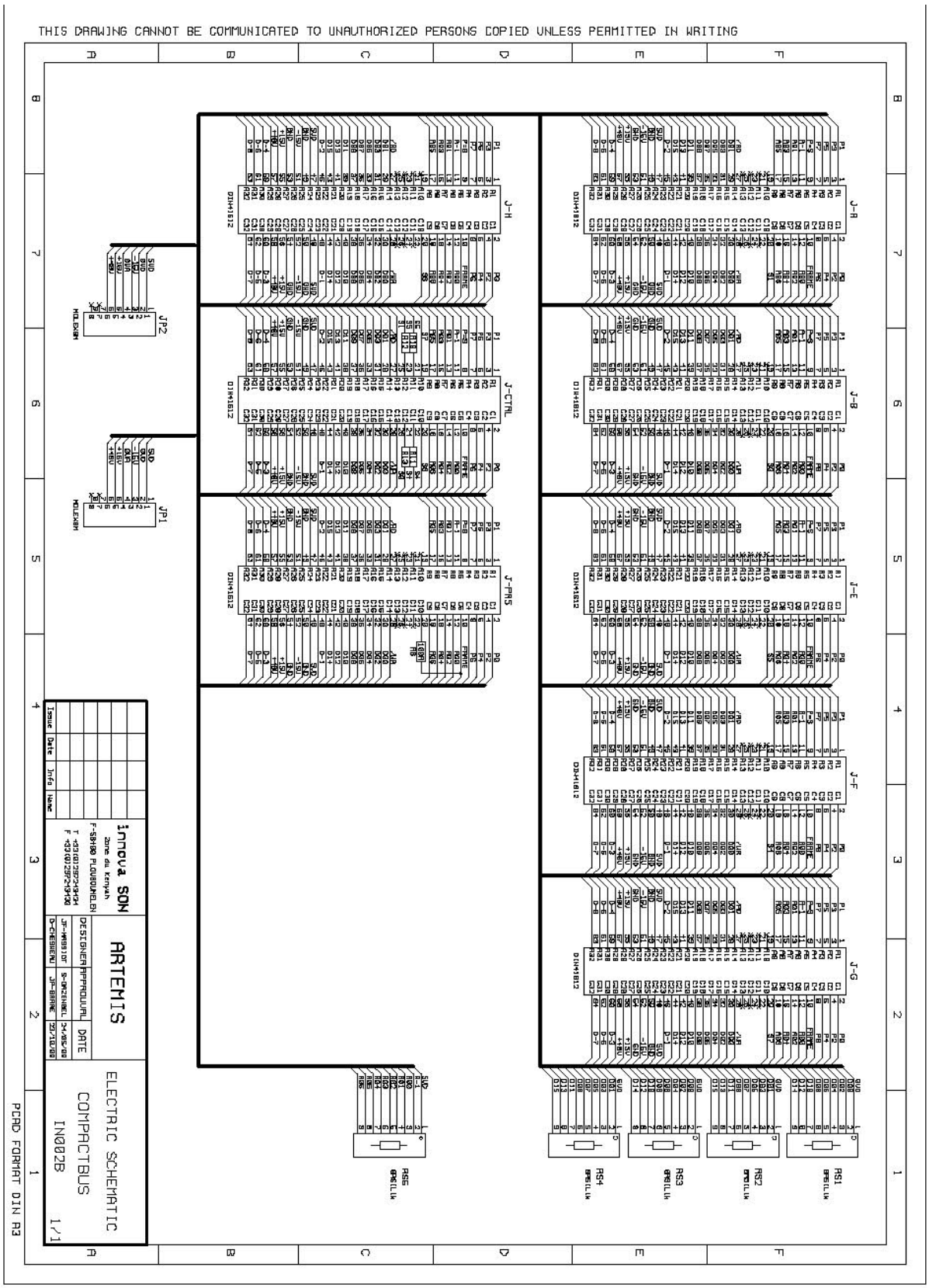
THIS DRAWING CANNOT BE COMMUNICATED TO UNAUTHORIZED PERSONS COPIED UNLESS PERMITTED IN WRITING
innova SON
ARTEMIS
ELECTRIC SCHEMATIC
COMPACTBUS
IN0028
1/1
PCAD FORMAT DIN A3

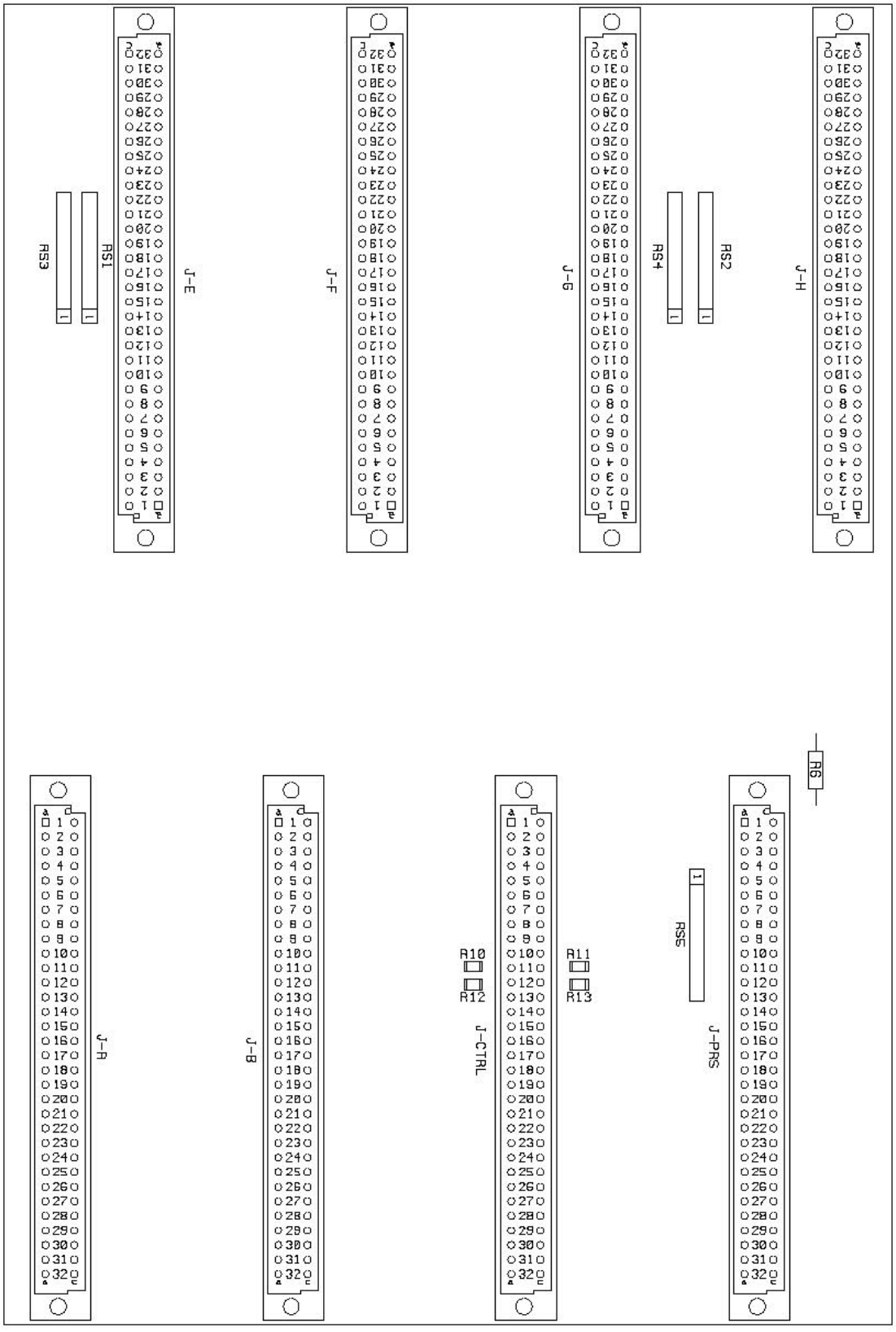

The technical files are confidential and the property of InnovaSON S.A.
Any copy, distribution or use needs our agreement – Please contact our technical support service.

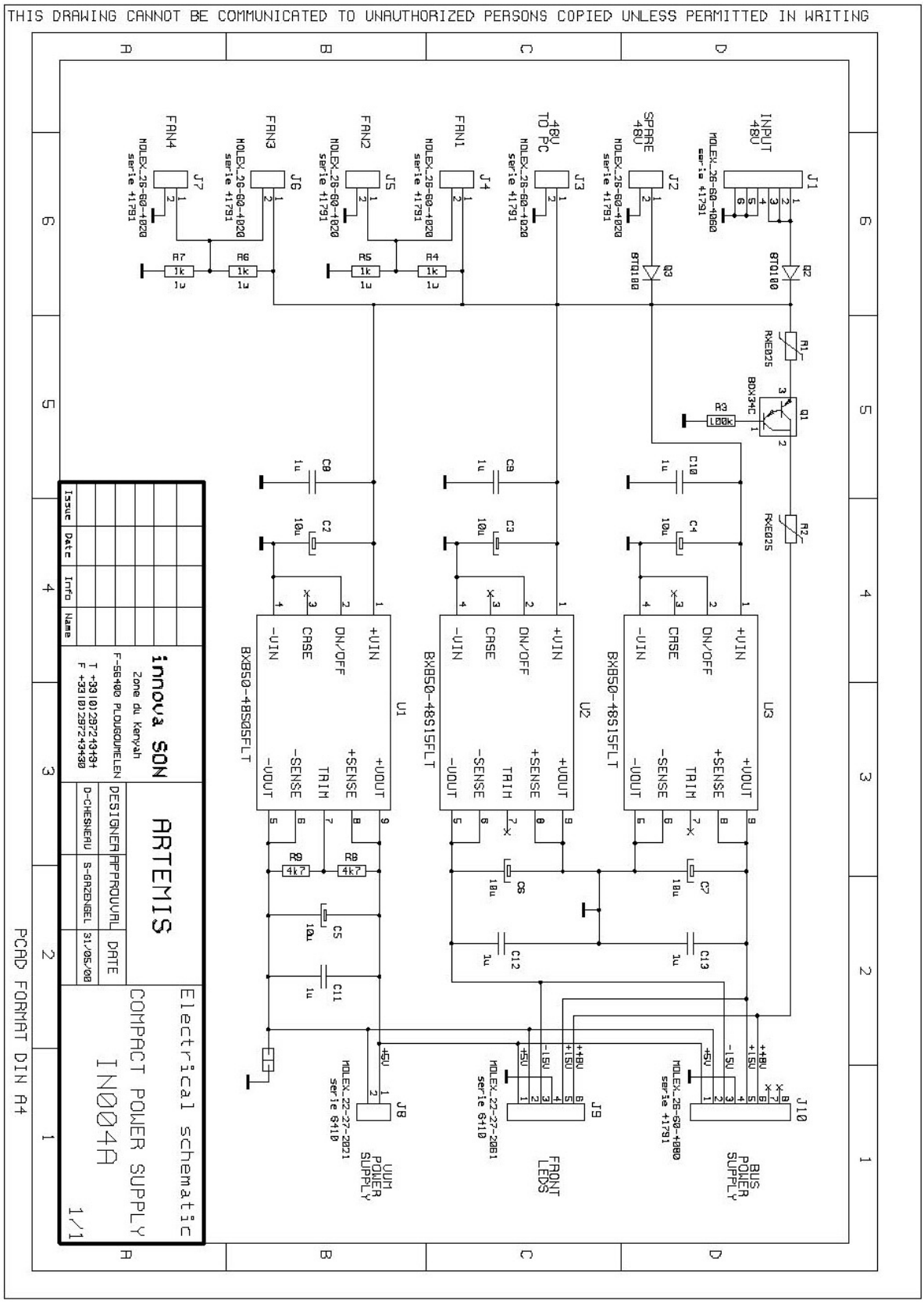

The technical files are confidential and the property of InnovaSON S.A.
Any copy, distribution or use needs our agreement – Please contact our technical support service.

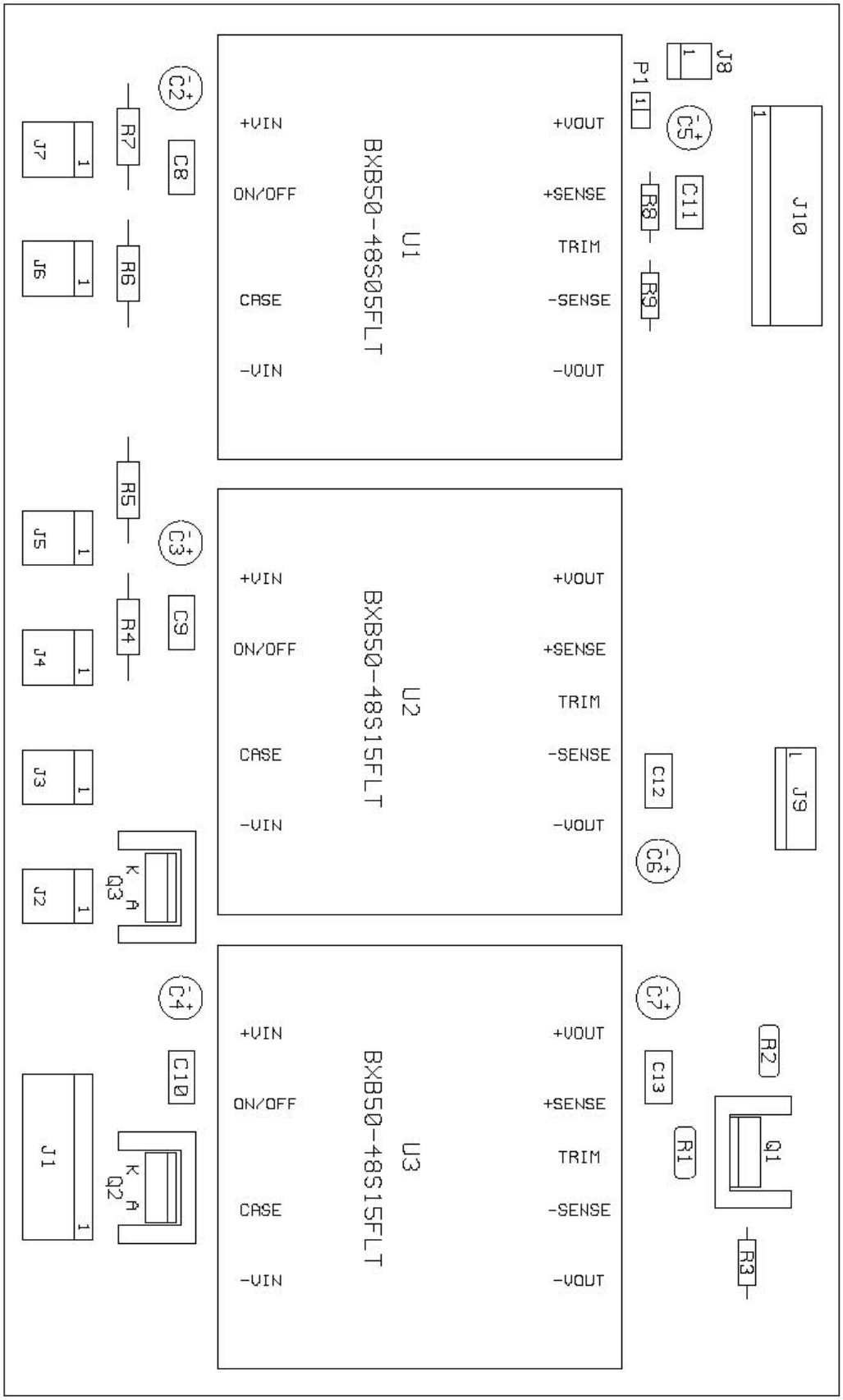

The technical files are confidential and the property of InnovaSON S.A.
Any copy, distribution or use needs our agreement – Please contact our technical support service.

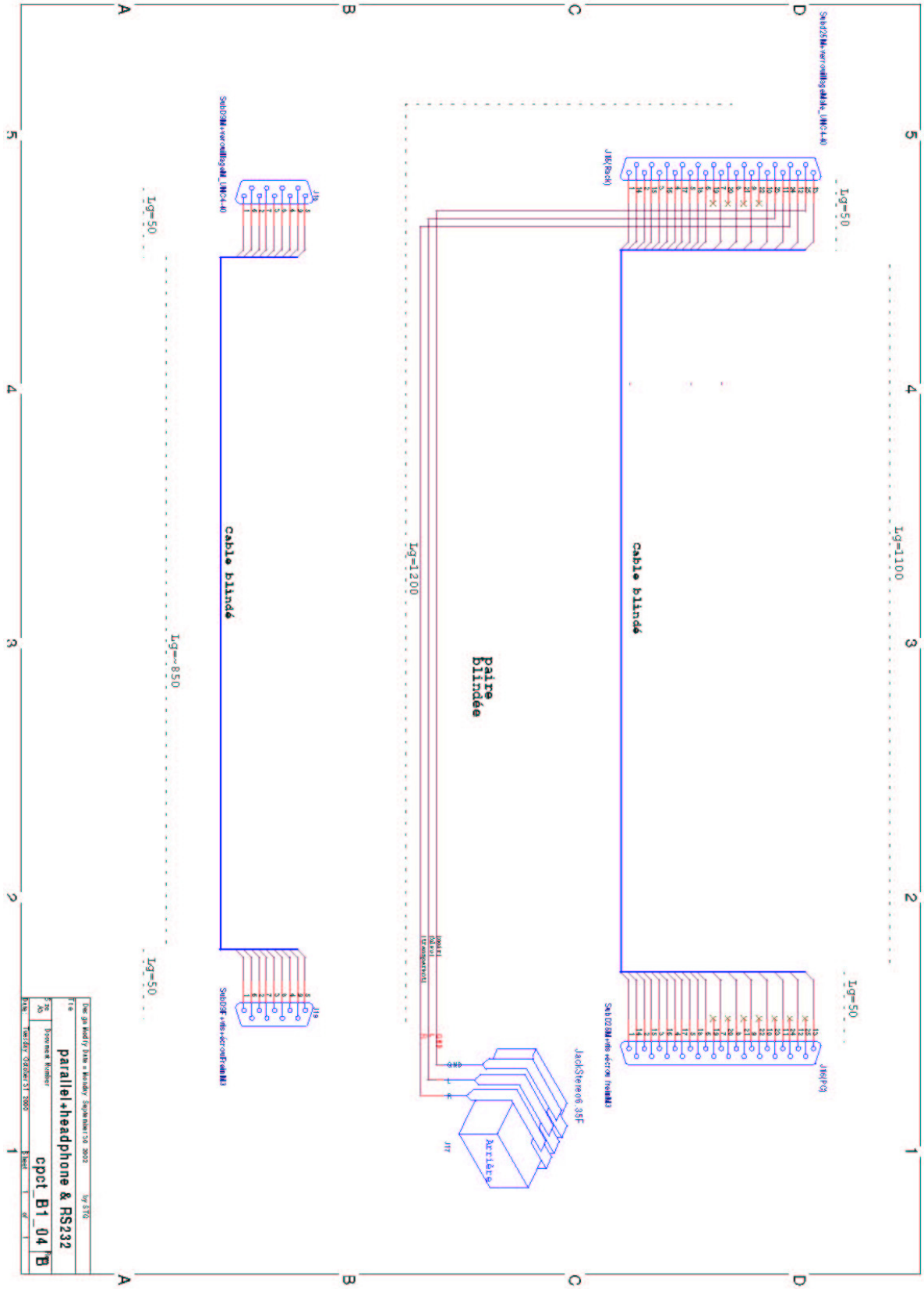

The technical files are confidential and the property of InnovaSON S.A.
Any copy, distribution or use needs our agreement – Please contact our technical support service.

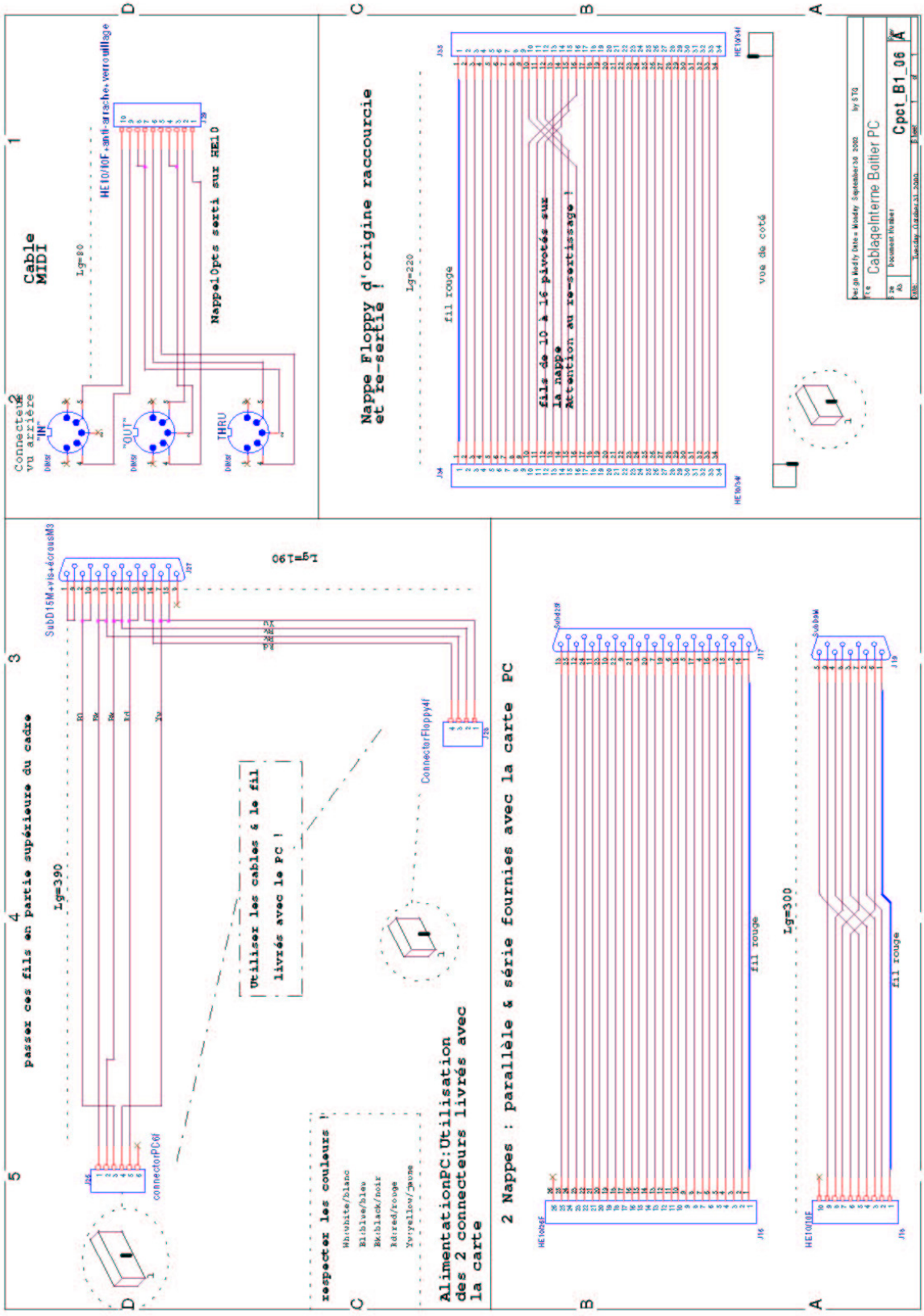

The technical files are confidential and the property of InnovaSON S.A.
Any copy, distribution or use needs our agreement – Please contact our technical support service.

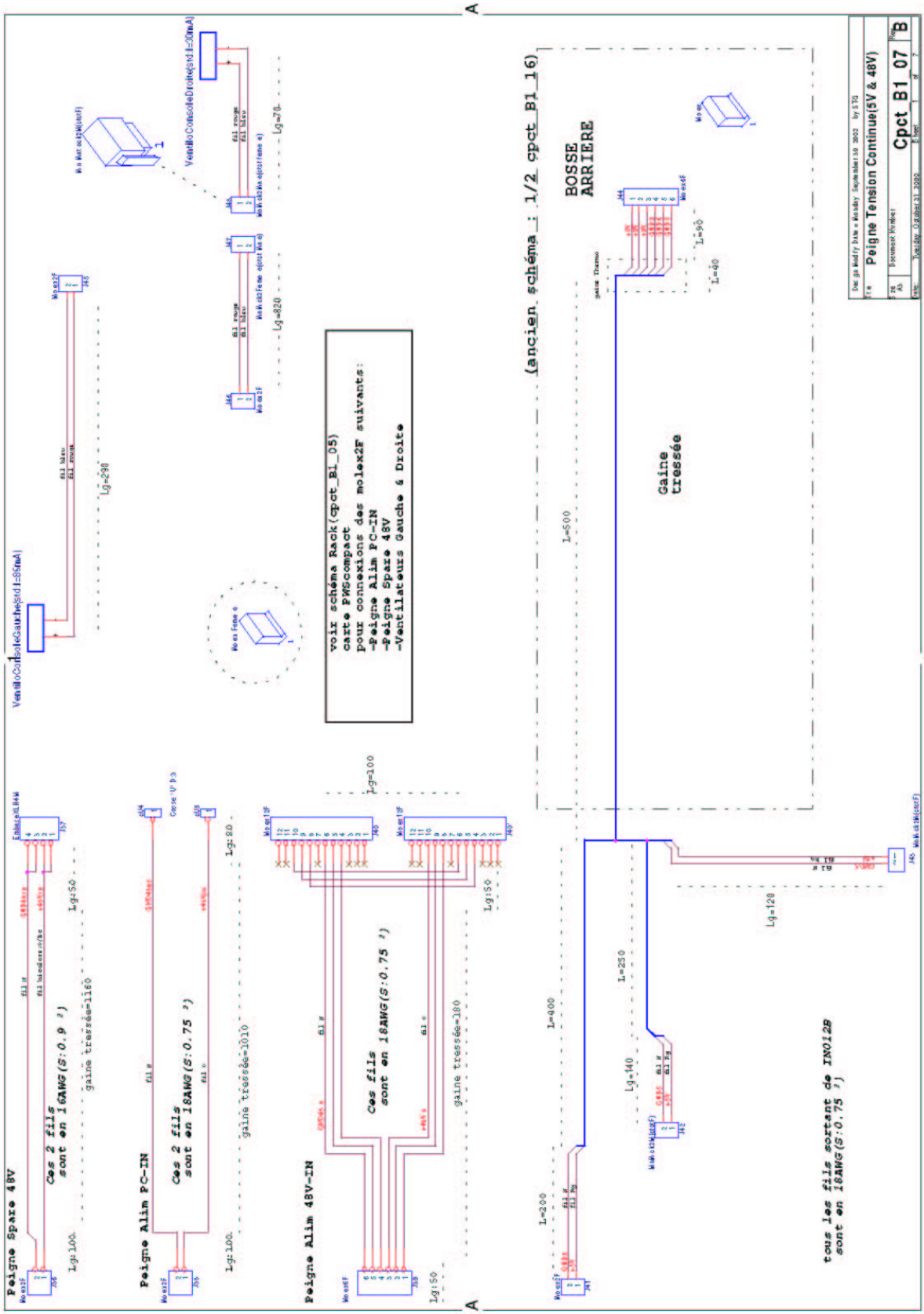

The technical files are confidential and the property of InnovaSON S.A.
Any copy, distribution or use needs our agreement – Please contact our technical support service.

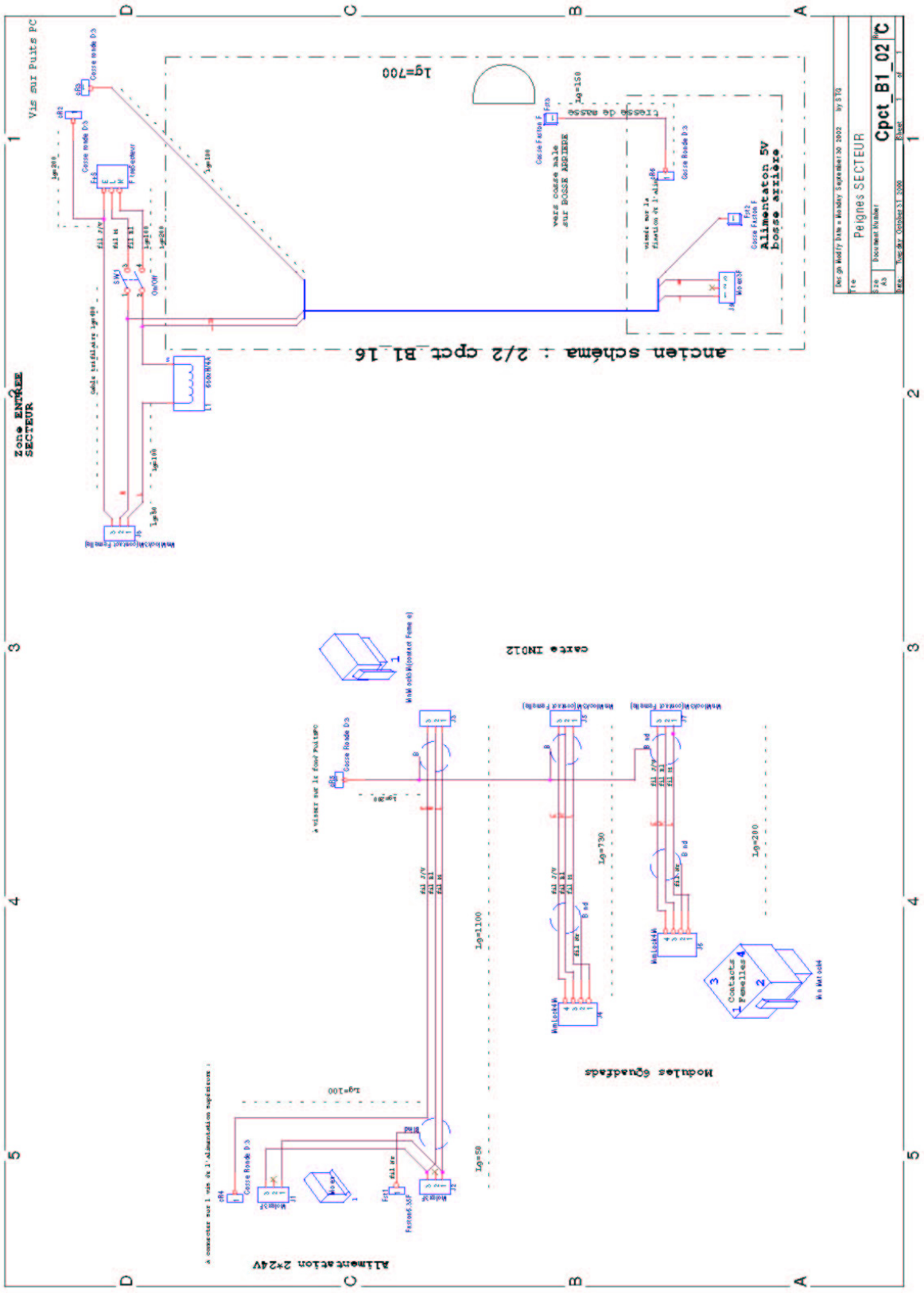

The technical files are confidential and the property of InnovaSON S.A.
Any copy, distribution or use needs our agreement – Please contact our technical support service.

Desk modules	Part-code
- Channel control panel (panel equipped with its electronic board)	SG1007-001-01
- Utilities panel (panel equipped with its electronic board)	SG1006-001-01
See the section II.1 for the exchangeable parts of the panels.	
- Quadfad module (no button and no front panel)	SF2201-001-01
- Crosstime Quadfad (3 faders + Crosstime fader module)	SF2203-001-01
- Left faders blue panel	MF1013-005-01
- Right faders blue panel	MF1024-001-01
See the section II.3 for the exchangeable parts of the Quadfad.	
- VU-meters 20 bar-graphs	SF2033-001-01
- VU-meters 4 bar-graphs	SF2032-001-01
Desk controllers	
- Sensplit Master	SF2037-001-01
- Sensplit Slave	SF2036-001-01
PC and peripherals	
- Sy40 PC (233 MHz with 64 MO HD / 64 or 80 MO RAM)	SG1005-001-01
- PC mother board + 233MHz CPU 64/80 PIA671DV	SAE10033-000
- MIDI board (on PC 104)	SF2038-001-01
- 12” LCD/TFT screen	SAE10002-000
- Keyboard and trackball white	SAE10032-000
- Keyboard and trackball Black	SAE10031-000
Power supply units	
- IN004A PWS DC/DC module for audio rack Sy40	SF2046-001-01
- NLP110-9624	CLAX0004-000
- NLP40-7605	CLAX0003-000
- NFS110-7612	CLAX0002-000
- ACE-870T	CLAX0006-000
Audio controllers	
- DSP Sy40 audio engine DSP for Sy40	SF2005-001-01
- MC-64 controller bus for audio rack	SF2020-001-01
Miscellaneous	
- Sy40 and Sensoft 8 User guide (available on line)	DP0004-001-01
- Sy40 cover	BH001-001-01

The technical files are confidential and the property of InnovaSON S.A.
Any copy, distribution or use needs our agreement – Please contact our technical support service.

Sensplit Master programming

The following process will allow you to load the program **vn_303e** into the card AM186 (Sensplit Master).

This process is executed at the at the first start up of the card and when the card has lost the program after a breakdown.

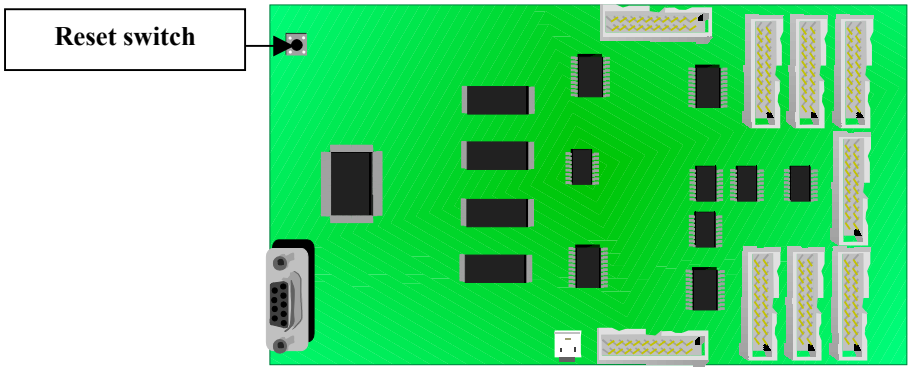

Before reloading the program, try a reset on the sensplit card (little switch on the card).

Sometimes this could "unfreeze" the processor of the card.

Symptoms which justify a re-programing :

- If the program has been badly loaded, so the message « reset desk » appears continuously.
- If the program is not loaded at all, Sensoft displays no desk in the menu bar.
- InnovaSON has improved the software which drive the Desk and provide a new revision.

Procedure

- Quit sensoft
- Launch « terminal.exe » from Sensoft's directory
- With **[F1]** choose the correct serial port (COM2 for Sy40).
- With **[F2]** switch to text mode
- With **[F3]** and **[F4]** choose a modem speed of 9600 bauds
- Press **[F5]** and type vn_303e (validate with **[enter]**)
- Create a reset on the sensplit card (with its Reset switch) and press immediately the key **[A]** on the keyboard.
- Type : **xa** (valid with enter), this action delete the flash memory of the card. To be sure, repeat this action at least twice.
- Type : **w** (valid with enter), this action put the card in reception mode.
- Press F8, the program is transferred in the flash memory of the card (Download).
- At the end of the transfer you have the "Program Device Successfully" message.
- Make again a reset on the card and verify that the 4 green LED are ON after the reset.
- Quit terminal and restart the desk.

The technical files are confidential and the property of InnovaSON S.A.
Any copy, distribution or use needs our agreement – Please contact our technical support service.

09-févr-04	Reference	SV002400101	SV0024500101	SV002300101
	Detail	Silent PC 800MHz CPU Flash 64Mb Ram 64Mb includes USB External Floppy drive	Retrofit External Fans Kit indoor use only below 35°C ambient	Complete Kit (the 2 parts)
	Description	   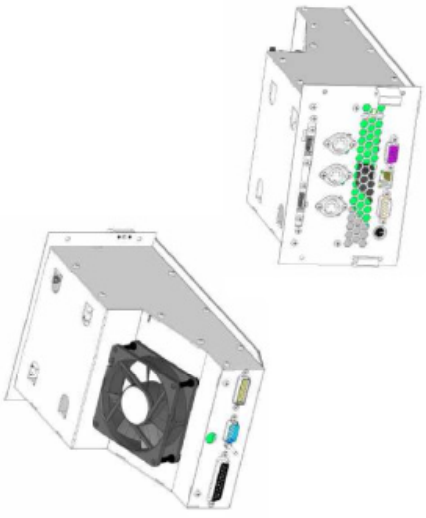		
Sy40 Cool Kit	version 1			

The technical files are confidential and the property of InnovaSON S.A.
Any copy, distribution or use needs our agreement – Please contact our technical support service.