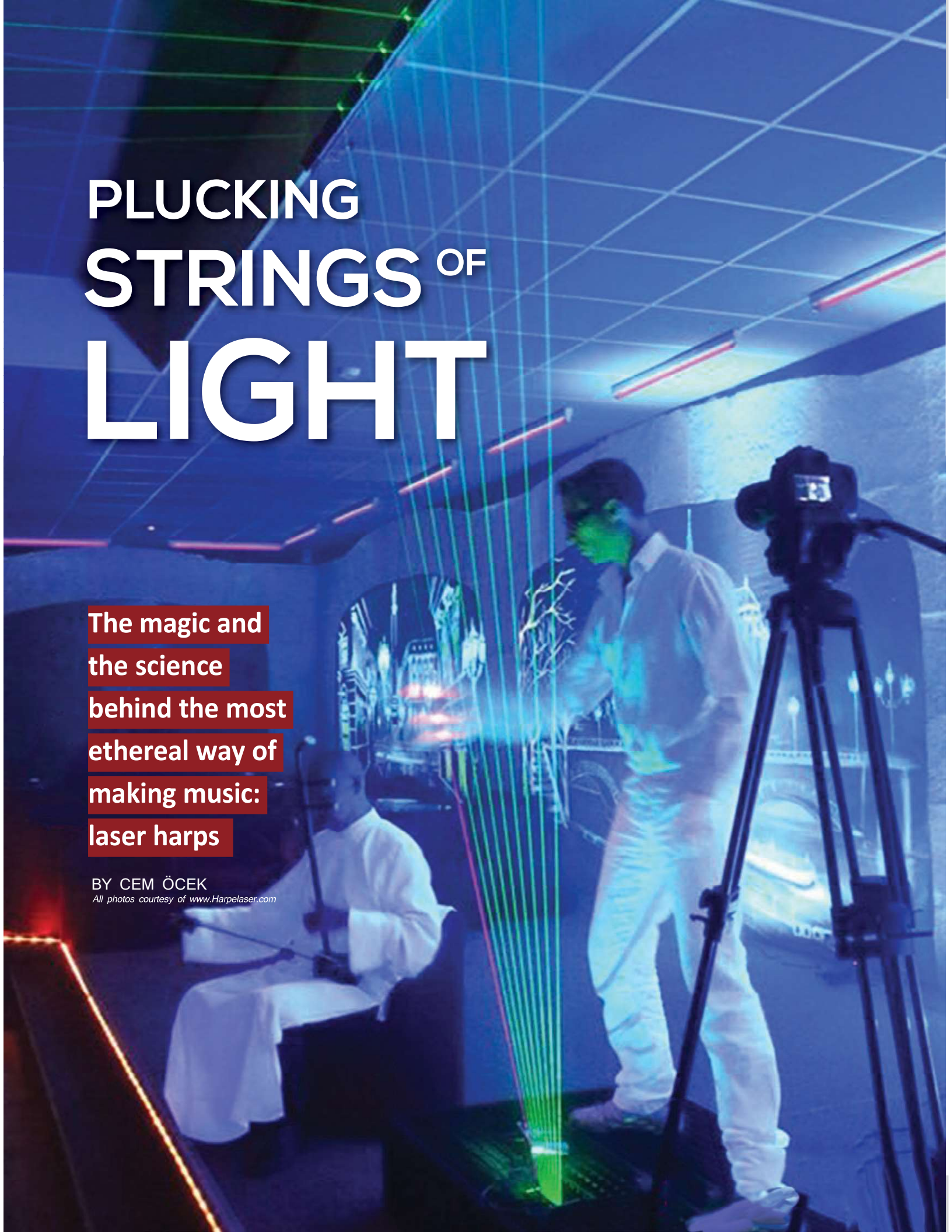

PLUCKING STRINGS OF LIGHT

The magic and the science behind the most ethereal way of making music: laser harps

BY CEM ÖCEK

All photos courtesy of www.Harpelaser.com

Laser harps exist on the outskirts. They are a musical instrument, but not really. They are stringed, but not really. They are harps... but not really. One thing is certain though: they are spectacular.

A laser harp is an electronic musical instrument invented back in 70's and popularized by French musician **Jean Michel Jarre**. He started using the laser harp in his concerts in 1981, and this hi-tech device has been part of his artistic identity ever since.

During its heyday some people thought that the laser harp was a fake, that it couldn't produce any sounds, and that there was another device making the sound as playback. In order to convince the public, Jarre made some mistakes on purpose when he was playing laser harp in some concerts.

Today, a select group of enthusiasts and a few commercial firms not only keep this instrument alive, but also take part in its current evolution.

Design

In some ways, a laser harp looks similar to the traditional instrument from which it took the name, since the way of producing the sound is similar to plucking the strings of an acoustic harp. But these strings are made of light.

The laser harp is more a musical interface than a real musical instrument. Although there are number of different designs, a laser harp basically consists of several laser beams, close to each other, which can be blocked by the musician's hand in order to trigger synthesized, sampled, or computer generated sounds. The characteristic sound of the laser harp in Jarre's performances, for example is generated by an Elka Synthex, an old synthesizer made in Italy.

Frameless laser harps

The most common construction type of a laser harp is the so called *frameless* (or *unframed*) design, due to the fact that it doesn't have a frame limiting the extension of the laser beams. Also known as "Infinite Beam Laser Harps", its laser beams go directly to the sky or parallel to the audience – obviously not directly at them for safety reasons *(see picture below)*. In a frameless laser harp a single laser beam is split into several ones by a mirror connected to a high speed step motor. When the

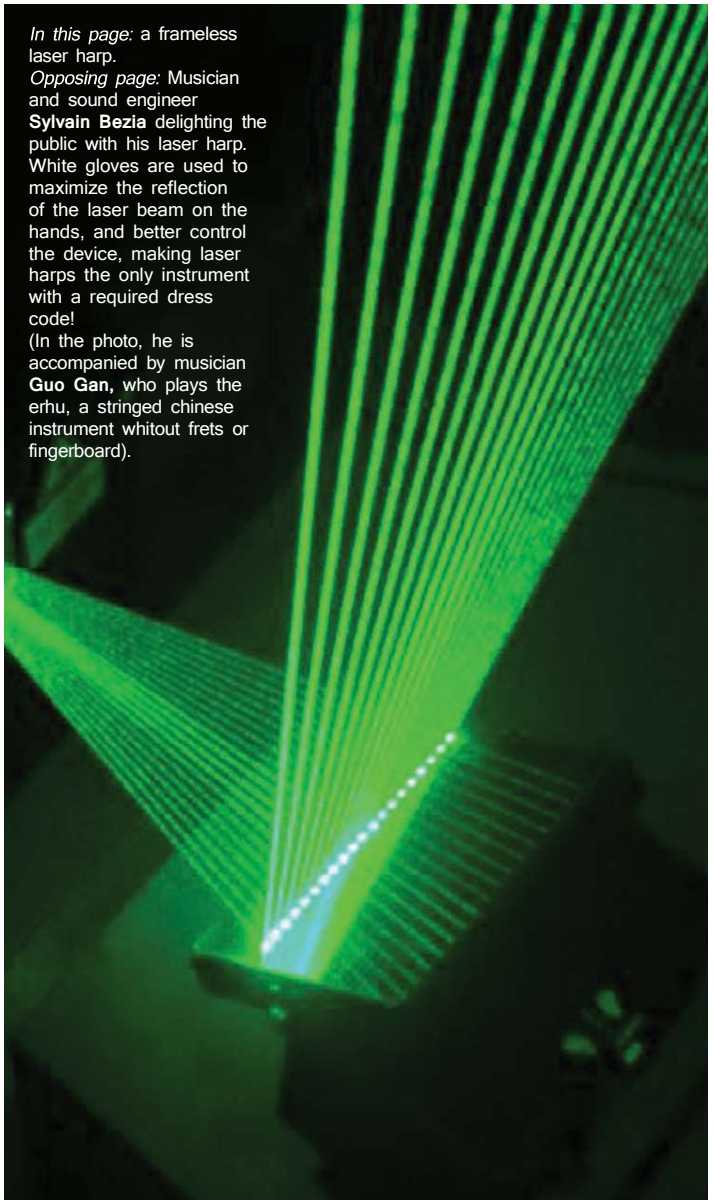

In this page: a frameless laser harp.
Opposing page: Musician and sound engineer **Sylvain Bezia** delighting the public with his laser harp. White gloves are used to maximize the reflection of the laser beam on the hands, and better control the device, making laser harps the only instrument with a required dress code!
(In the photo, he is accompanied by musician **Guo Gan,** who plays the erhu, a stringed chinese instrument whitout frets or fingerboard).

musician blocks one of the beams with his hand, the light reflected by the hand reaches the light sensor; the electronics that control the step motor and the mirror attached to it, detect the exact position of the mirror in order to define which laser beam is blocked at that point in time (or in other words, which "string made of light is plucked").

This information is sent to the music generating device, together with the duration of the blocking. In most laser harps the musician can move his hand closer to the source of the laser beam, affecting for example the volume or some other parameter associated to that beam. This is done by a light sensor placed close to the starting point of the laser beam. The closer the hand is to the source of beam, the more light is reflected by the hand and captured by the light sensor. There are also some other frameless laser harp designs that, instead of splitting one laser beam, have independent beams for each note.

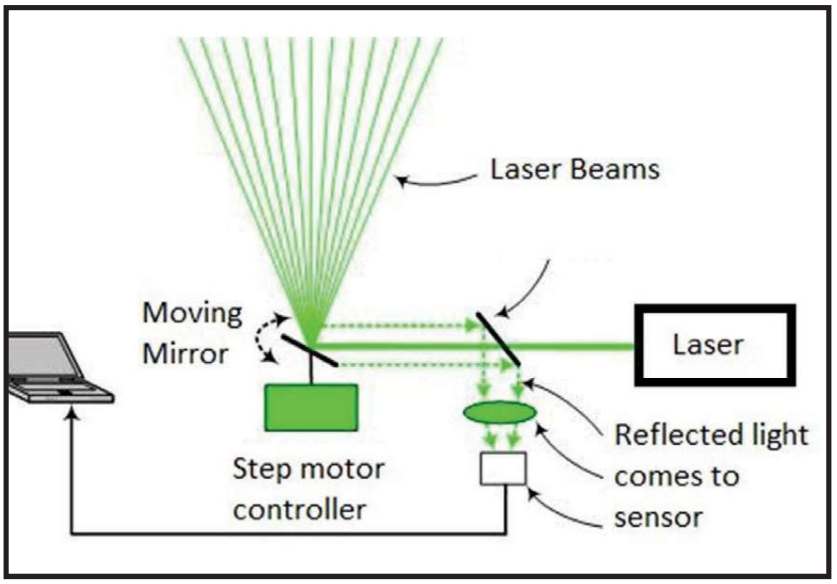

Working principle of a *frameless* laser harp.

frame that act as sensors. When a laser beam is blocked by the musician's hand, the associated sensor is "left in the dark" for as long as the blocking continues, and that information is sent to the controller; the resulting sounds are triggered by an interruption of the laser instead of a reflection of them. From there on, the signal follows the same path as in the frameless laser harps: the data generated by the device is converted to a musical note by using synthesizer, sampler or computer.

Framed laser harps

The other common way to construct a laser harp is to use a frame, like a traditional harp does. The first one was a prototype made by **Geoffrey Rose** in 1975; it had an octagonal shape and 10 laser beams arranged in a 5x5 matrix.

The function of the frame is to hold the laser generating devices on one end, and the sensors on the other. The laser beams can be directed upside or downside. Photodiodes or photo resistors inside the upper or lower part of the

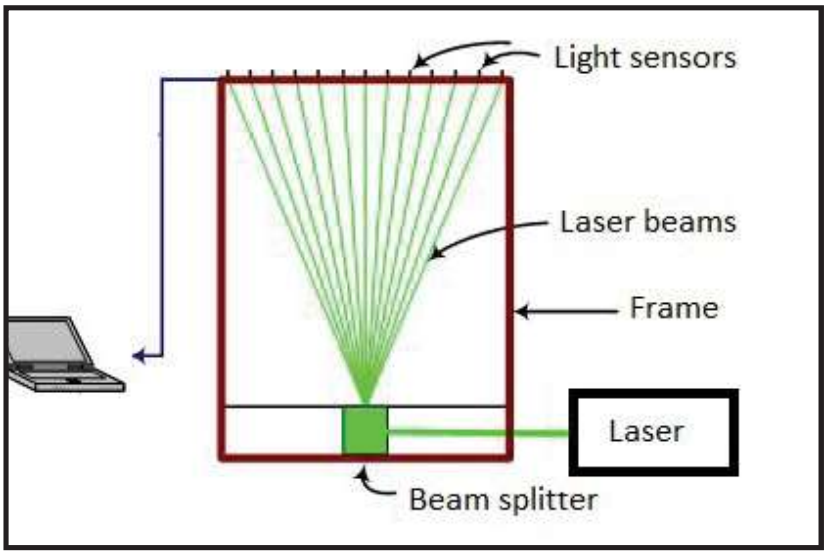

Working principle of a *framed* laser harp.

Laser harps owe their reputation to Jean Michel Jarre (seen in the photo on the right during a concert in Helsinki in 2009).

He used a laser harp in almost every concert, including the *Rendes-vouz Houston* concert (with an estimated audience of 1.5 million people–second photo on the right), and the biggest concert in history: On Bastille Day, 1990, he performed a concert at the ultramodern district of La Défense, in Paris, attended by an estimated of 2.5 million people *(photos: Creative Commons).*







The components of a laser harp. See also their block diagram representation in page 16. Compare with the size of the match on the right, for reference.

Some laser harps use a camera as sensor, instead. The camera is placed in front of the laser beams and connected to a computer to detect which laser beam is blocked, the duration of that blocking, and the intensity of the reflected light by musician's hand. This data is then are converted to MIDI and sent to a music generating device.

Since there is a frame to limit the laser beams, the size of the instrument can vary depending on the need—from very small ones, to very large stage instruments.

Some of the framed laser harps have an additional functionality to change octaves, sounds or any programmed settings of the instrument by blocking the laser beams. Some may also have several switch modes to play a sound sample to the end once it is triggered, or to play a sound until the beam is blocked a second time.

Some framed laser harps (it is a copyrighted idea) use acrylic rods as a light pipes: the laser beams run inside the rods, treated with some fluorescent medium added to them. This increases the responsiveness of the interface, and has the added benefit of making unnecessary the use of gloves. It also reduces the number of sensors to one, no matter the number of 'strings'. It costs more, though, and it makes the instrument bigger and heavier.

Frameless laser harps can work as if they were framed. This is called the "ceiling" mode: the ceiling of the room in which the frameless harp is played acts as a frame. The sensor works like in the frame mode, then; that is, detecting a blockage of the light instead of a reflection of it. If the reflection of a laser beam disappears from the ceiling (when the hand is placed between the laser and the ceiling) the note is triggered.

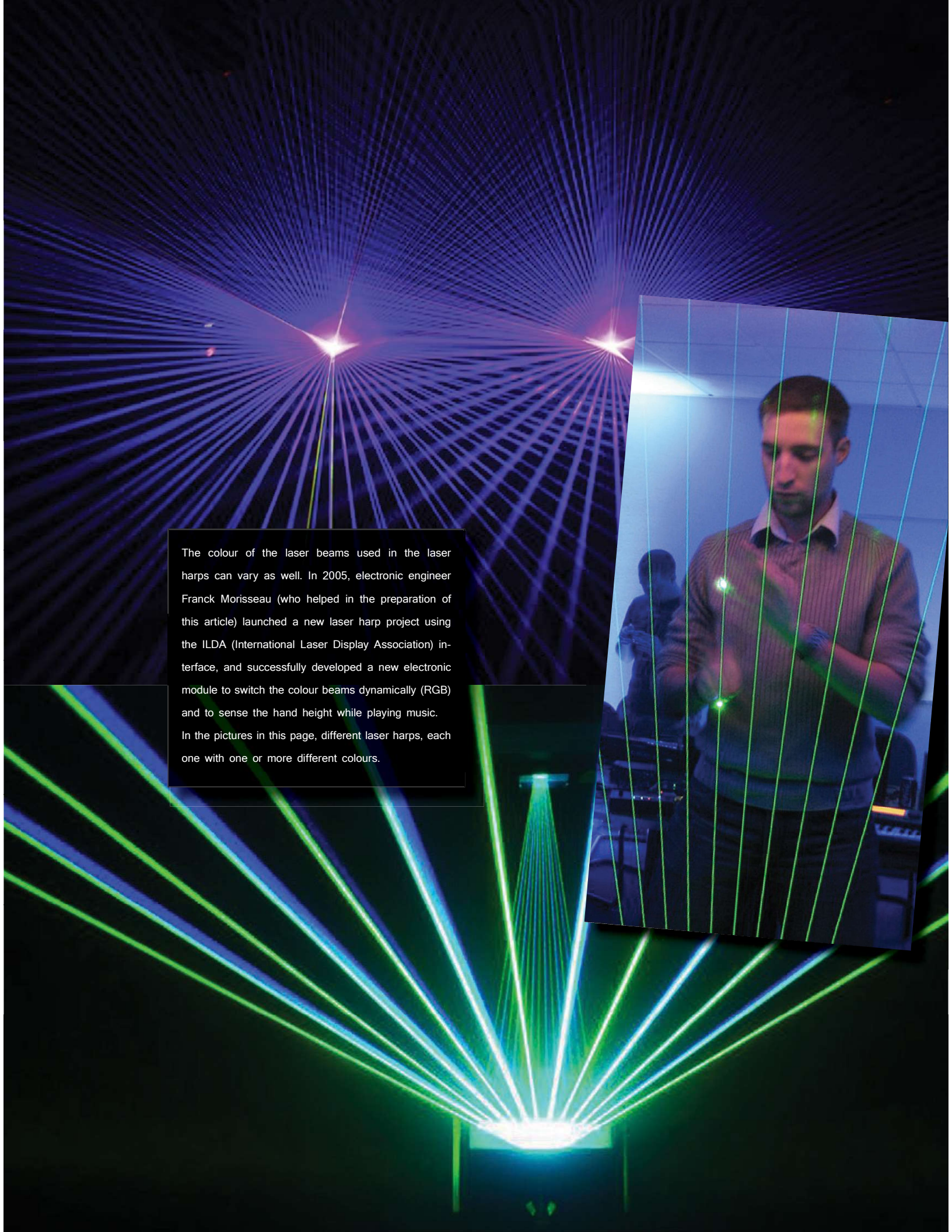

The colour of the laser beams used in the laser harps can vary as well. In 2005, electronic engineer Franck Morisseau (who helped in the preparation of this article) launched a new laser harp project using the ILDA (International Laser Display Association) interface, and successfully developed a new electronic module to switch the colour beams dynamically (RGB) and to sense the hand height while playing music.
In the pictures in this page, different laser harps, each one with one or more different colours.

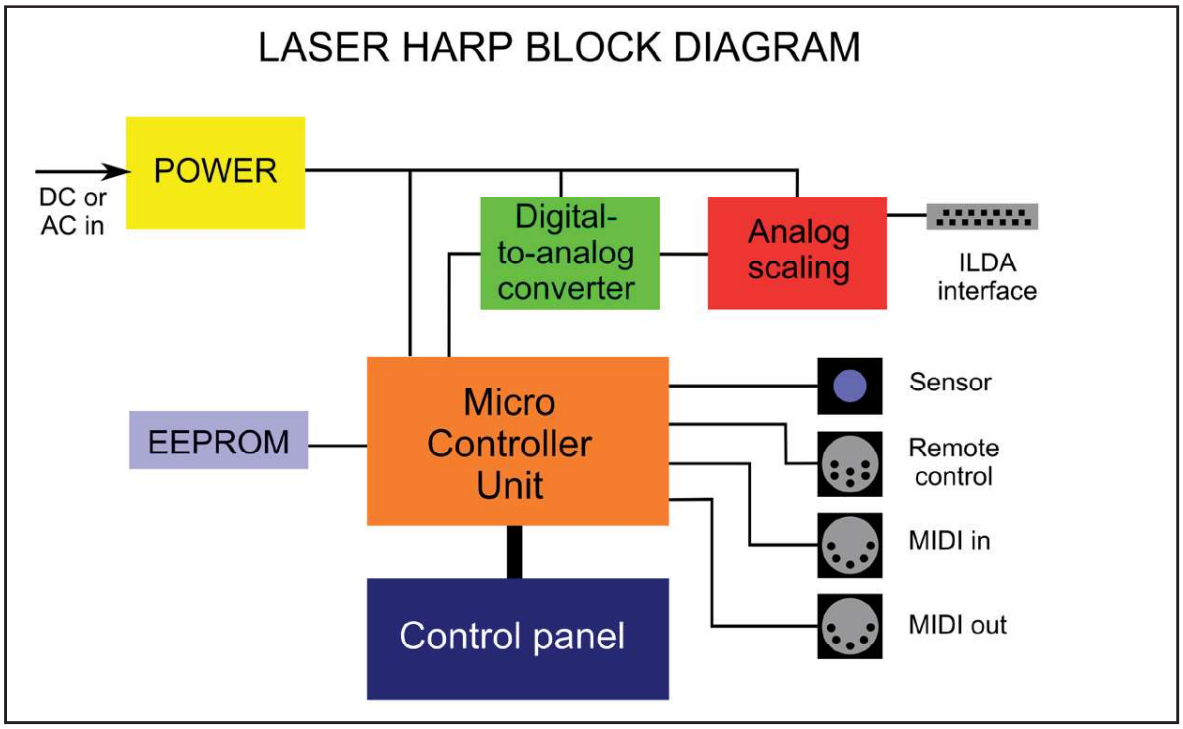

The power supply provides the necessary energy for all components. The **analog-to-digital converter** and the analog scaling device transform the analog signal picked up by the **sensor** (the reflection of the laser coming from the player's hands) and converts it in a digital signal. The **Micro Controller Unit** runs the firmware, which is the laser harp program. All functions are accessed via the **control panel**, which has an LCD display, 3 buttons, and 1 potentiometer. The **EEPROM** is a memory that stores data tracks and playlists. The **ILDA interface** brings together the laser harp with it laser unit. Finally, the signal is sent via the **MIDI connectors** to a synthesizer, computer, or a sampler in order to produce sound *(graphic courtesy of www.harpelaser.com).*

Lasers

The minimum requirement of laser power is about 300mW. This means that the device needs to use class IIIb or IV lasers, which can be hazardous for the musician's eyes. The use of protective goggles is required. The beam (once split, at least) is not damaging to the skin—the original, single laser beam could be, though; the use of gloves is intended to improve the reflection of the light in a frameless laser harp, and to give audiences a more visual impression of the instrument being played.

Thanks to the limited distances between laser generators and sensors, framed laser harps are able to use lasers with lower power. Since the notes are triggered by simply blocking the beam, gloves aren't necessary at all.

However, laser harps need another element: there has to be a means to generate smoke. A smoke machine generating a steady and low output of smoke is ideal—otherwise the lasers wouldn't be visible at all. And that goes not only for the player and the audience, but also for the sensor: it perceives the subtle echo light in the hand of the player and in the surrounding smoke. The more homogeneous the smoke, the better is the response of the system—this obviously makes things harder when it comes to playing outdoors.

Well, we said that laser harps were spectacular, but nobody said they were simple.

Additional information:
LaserHarpe.com is the best resource available on the subject. It offers free plans, manuals, and other documentation necessary to build a laser harp; they even provide the builder with the right firmware for the device.
Sylvain Bezia's: www.sylvainbezia.com
Guo Gan's: www.guogan.fr