HiFi ENGINE®

For more Hi-Fi manuals and set-up information
please visit www.hifiengine.com

Downloaded from www.Manualslib.com manuals search engine

ORDER NO. SD7706-1234

Service Manual

Stereo Integrated Amplifier

SU-8080

(M), (MC)

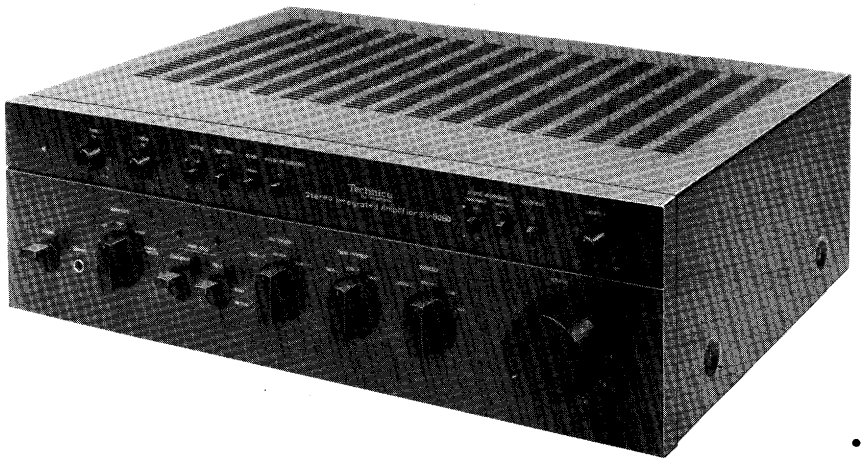

- The model SU-8080 (M) is available in America only.
- The model SU-8080 (MC) is available in Canada only.

TECHNICAL SPECIFICATIONS

(Specifications are subject to change without notice for further improvement.)

POWER AMPLIFIER SECTION

Rated minimum sine wave RMS power output
20 Hz ~ 20 kHz
both channels driven
0.02% total harmonic distortion
72W per channel (8 ohms)

20 Hz ~ 20 kHz continuous power output
both channels driven
0.05% total harmonic distortion
90W per channel (4 ohms)

1 kHz continuous power output
both channels driven
0.02% total harmonic distortion
74W per channel (8 ohms)
92W per channel (4 ohms)

Total harmonic distortion	0.02% at rated power (20 Hz ~ 20 kHz) 0.0015% at half power (1 kHz)
Frequency response	20 Hz ~ 20 kHz, $^{+0}_{-0.1}$ dB
	0 Hz ~ 100 kHz, $^{+0}_{-3}$ dB
S/N (IHF, A)	115 dB
Residual hum & noise	100μV
Damping factor	70 (8 ohms)
Input sensitivity & impedance	1V/47 kilohms
Load impedance	
MAIN or REMOTE	4 ~ 16 ohms
MAIN+REMOTE	8 ~ 16 ohms

PRE-AMPLIFIER SECTION

Input sensitivity & impedance	
PHONO 1, 2	2.5mV/27, 47 kilohms
TUNER	200mV/35 kilohms
AUX	200mV/35 kilohms
TAPE DECK 1, 2 PLAYBACK	200mV/35 kilohms
PHONO maximum input voltage (1 kHz, RMS)	280mV
Total harmonic distortion	0.01%
S/N (IHF, A)	
PHONO 1, 2	88 dB
TUNER, AUX via tone	100 dB
TUNER, AUX direct	106 dB
Frequency response	
PHONO 1, 2	RIAA standard curve ± 0.2 dB
TUNER, AUX	20 Hz ~ 20 kHz, $^{+0}_{-0.1}$ dB
Tone controls	
BASS	50 Hz, +7.5 dB ~ −7.5 dB
TREBLE	20 kHz, +7.5 dB ~ −7.5 dB
Equalizer subsonic filter	30 Hz, −12 dB/oct.
High filter	10 kHz, −6 dB/oct.
Loudness control (volume at −30 dB)	100 Hz, + 8 dB
Muting	−14 dB
Output voltage	
PRE OUT rated	1V
maximum	9V
TAPE DECK 1, 2 REC OUT	200mV

GENERAL

Power supply	AC 120V 60 Hz
Power consumption	190W (only for America) 435VA (only for Canada)
Dimensions (W x H x D)	450 x 140 x 371 mm (17$^{23}/_{32}$" x 5½" x 14$^{19}/_{32}$")
Weight	13.5 kg (29.8 lb.)

Weights and dimensions shown are approximate.

Technics by Panasonic

Panasonic Company
Division of Matsushita Electric
Corporation of America
One Panasonic Way, Secaucus,
New Jersey 07094

Matsushita Electric of Hawaii, Inc.
320 Waiakamilo Road, Honolulu,
Hawaii 96817

Matsushita Electric of Canada Ltd.
40 Ronson Drive, Rexdale,
Ontario, Canada M9W 1B5

Downloaded from www.Manualslib.com manuals search engine

■ LOCATION OF CONTROLS

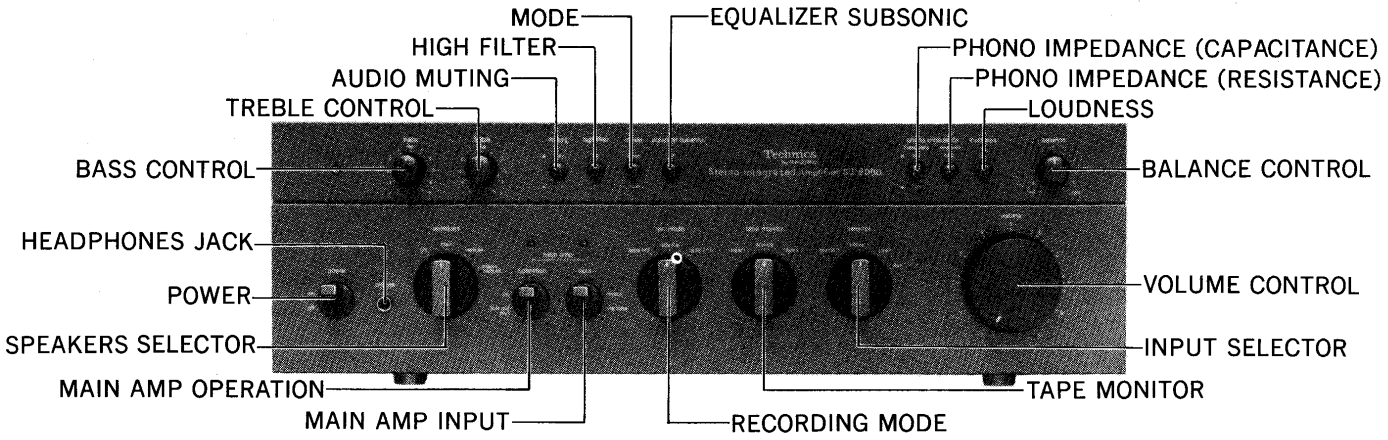

Front Panel View

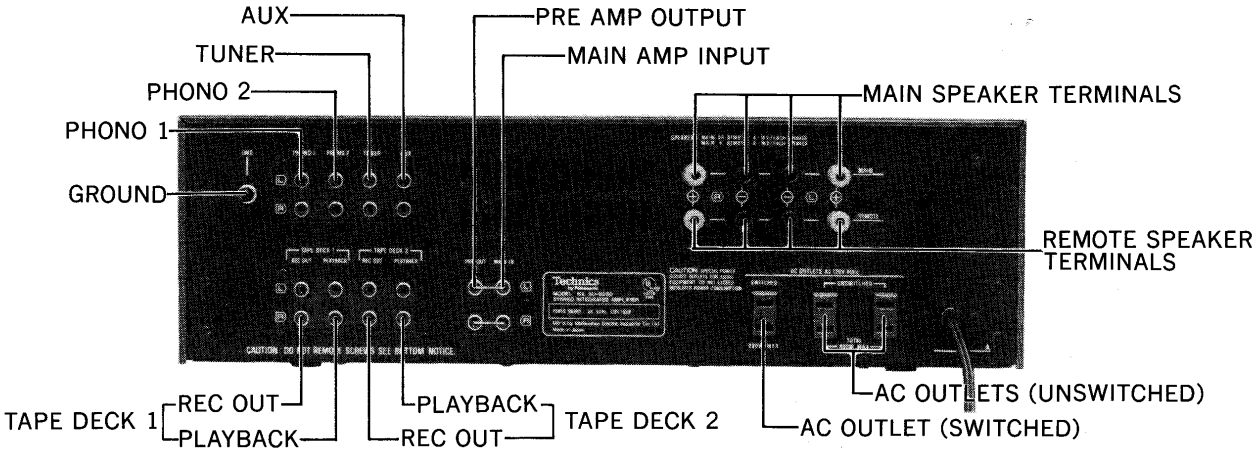

Rear Panel View

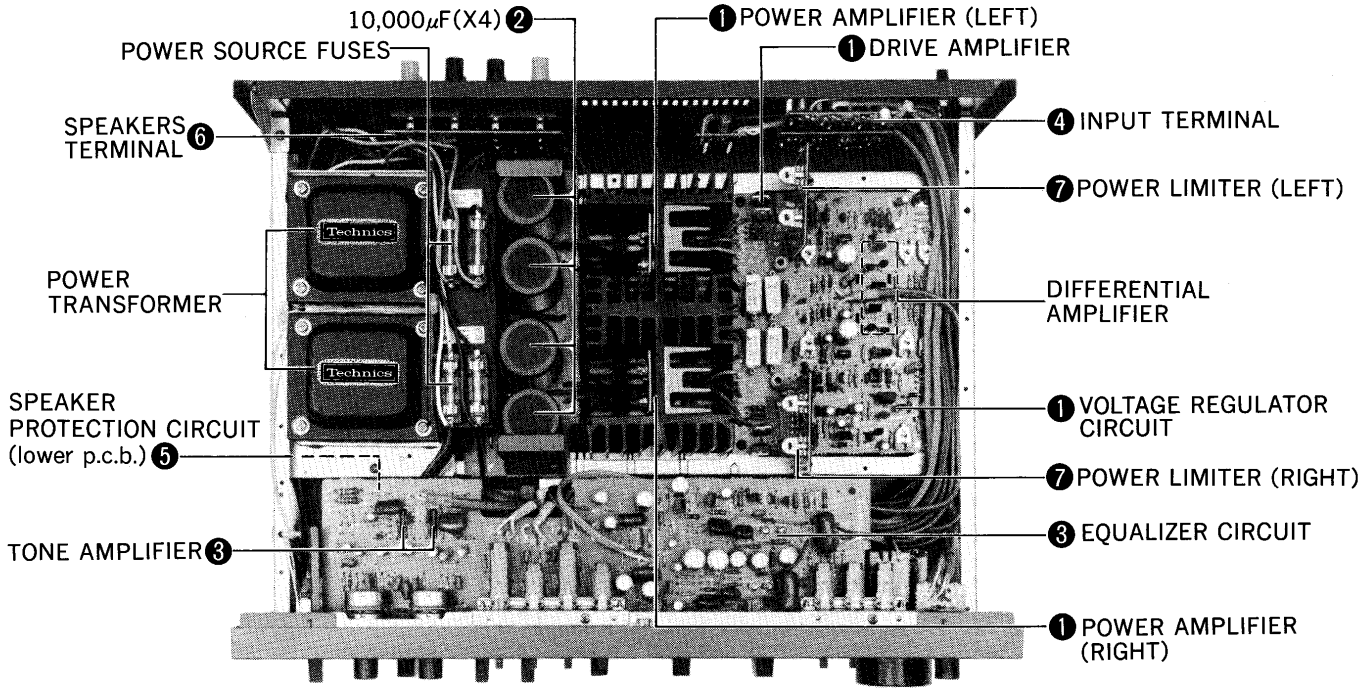

Downloaded from www.Manualslib.com manuals search engine

■ SERVICE AID

In the equalizer circuit of this unit, the ultra-Low Noise Transistors specially developed for the unit have been adopted at the initial stage, while carefully selected parts are employed for the NF elements to obtain high S/N ratio. Additionally, in the initial stages of the equlizer circuit and main amplifier circuit, the differential amplifier of current Mirror Load which provides high gain and stable functioning has been adopted.

- Although to tone amplifier has gain of 14 dB, the input signal is directly applied to the main amplifier when the "main amp input" switch is set to "direct", resulting in shortage of gain by −14 dB as compared with the case where the tone amplifier gain is obtained with the same switch set to "Via-tone". Therefore, in the "direct" position, the input to the main amplifier is incrased by 14 dB, while the same input is decreased by 14 dB in the "Via tone" position to obtain flat characteristics.
- In the output circuit, there are connected the speaker protection circuit which prevents damages to the speaker when DC current is developed at the speaker terminals and the overload having impedance less than 4Ω, with the power limiter circuit being employed for preventing breakage of the power amplifier when excessive power is developed or upon short-circuiting of the speaker terminals. In cases where sufficient output is not produced even when playing is started with the speakers connected, or where the sound is interrupted intermittently, check the speakers for connections and impedance.

• POWER LIMITER CIRCUIT

Fig. 1 shows the power limiter circuit. In cases where the speaker terminals are short-circuited or large power is developed with overload of less than 4Ω impedance connected, large current flows through the emitter resistances R345 and R347 of TR319 and TR321, resulting in increased voltage drop. The voltage is applied to the bases of TR351 and TR352 of the power limiter circuit, thus turning these 2 transistors "ON".
The collectors of TR351 and TR352 are connected to the bases of TR313 and TR315 of the driver amplifier through D350 and D351. Therefore, when TR351 and D351. Therefore, when TR351 and TR352 are rendered conductive, the base bias for the driver amplifier becomes shallow, and the voltage to be applied to TR319 and TR321 of the power amplifier is reduced to make these transistors inoperative, with the output being consequently suspended.

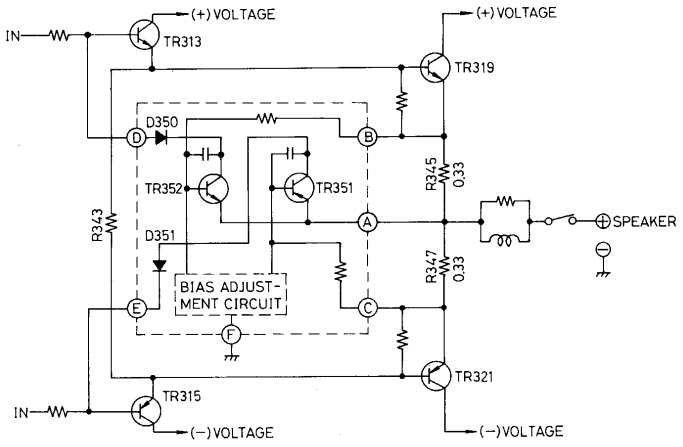

Fig. 1

■ TO REMOVE EQUALIZER AND TONE AMPLIFIER PRINTED CIRCUIT BOARD

* For repairing the printed circuit board for the equalizer • tone amplifier printed circuit board, and the relay circuit and the tape monitor circuit at its lower stage (bottom board side), remove the equalizer • tone amplifier printed circuit board to the following procedure.

1. Remove the cabinet.
2. Discharge the charged voltage of the power source capacitor in the manner as shown in "Before starting the repairing".
3. Remove the screws ① and ② at the upper surface of the front panel, as shown in fig. 2.
4. Pull off the knobs for "bass" and "treble" from the front panel.
5. Remove the nuts ① and ②, taking care not to scratch the front panel, with a thin cloth or the like applied to the tip of a 8mm nut driver, and then remove the equalizer and tone amplifier printed circuit board from the chassis.

* For removing other printed circuit board, such printed circuit boards are detachable when each of the knobs is pulled off, with the nuts fixed to the front panel being removed.

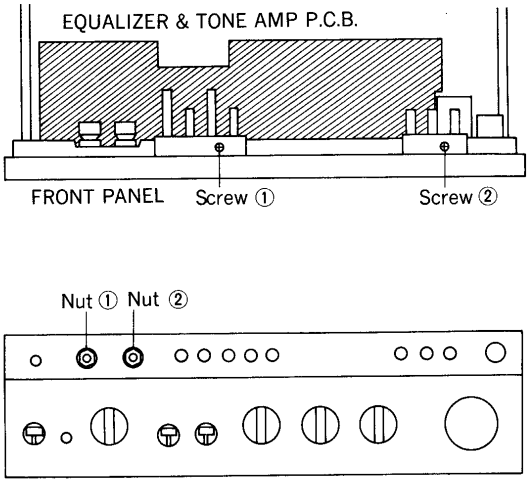

Fig. 2

For removing the lever switches of the "main amp." and "power" switches, remove the screws secured to the chassis after the front panel has been detached.

Downloaded from www.Manualslib.com manuals search engine

Downloaded from www.manuals search engine

❶ MAIN AMPLIFIER & POWER TRANSISTOR PRINTED CIRCUIT BOARD

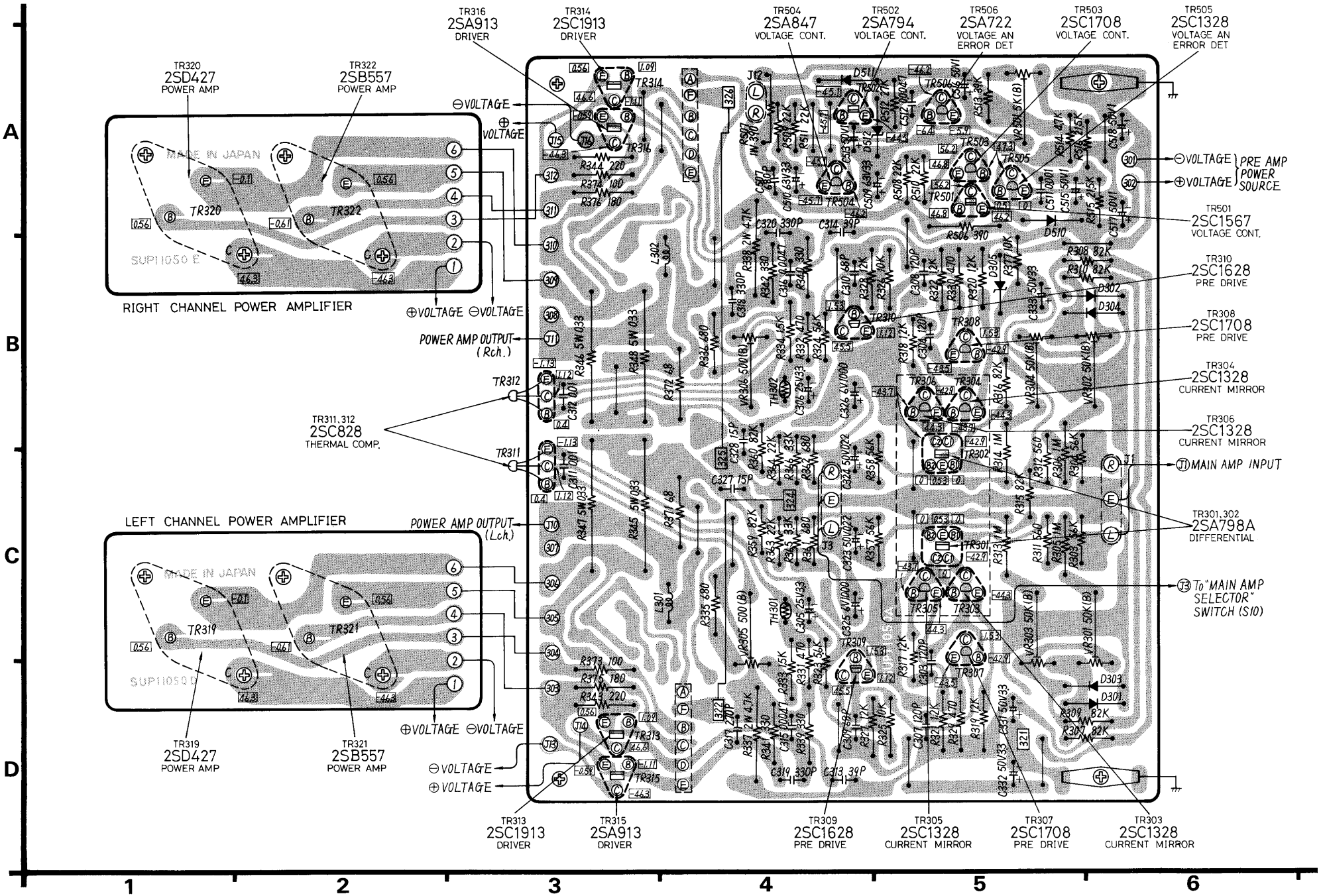

❷ POWER SUPPLY PRINTED CIRCUIT BOARD FOR MAIN AMPLIFIER

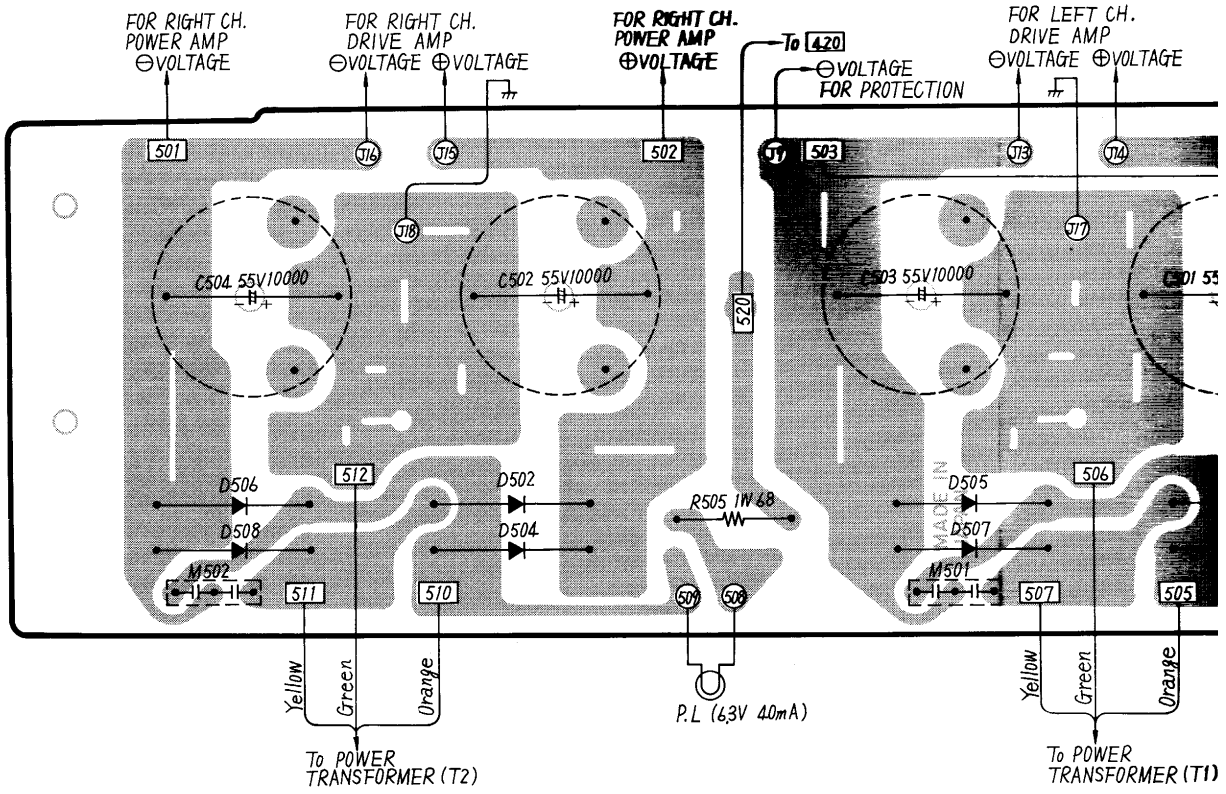

❸ EQUALIZER & TONE AMPLIFIER PRINTED CIRCUIT BOARD

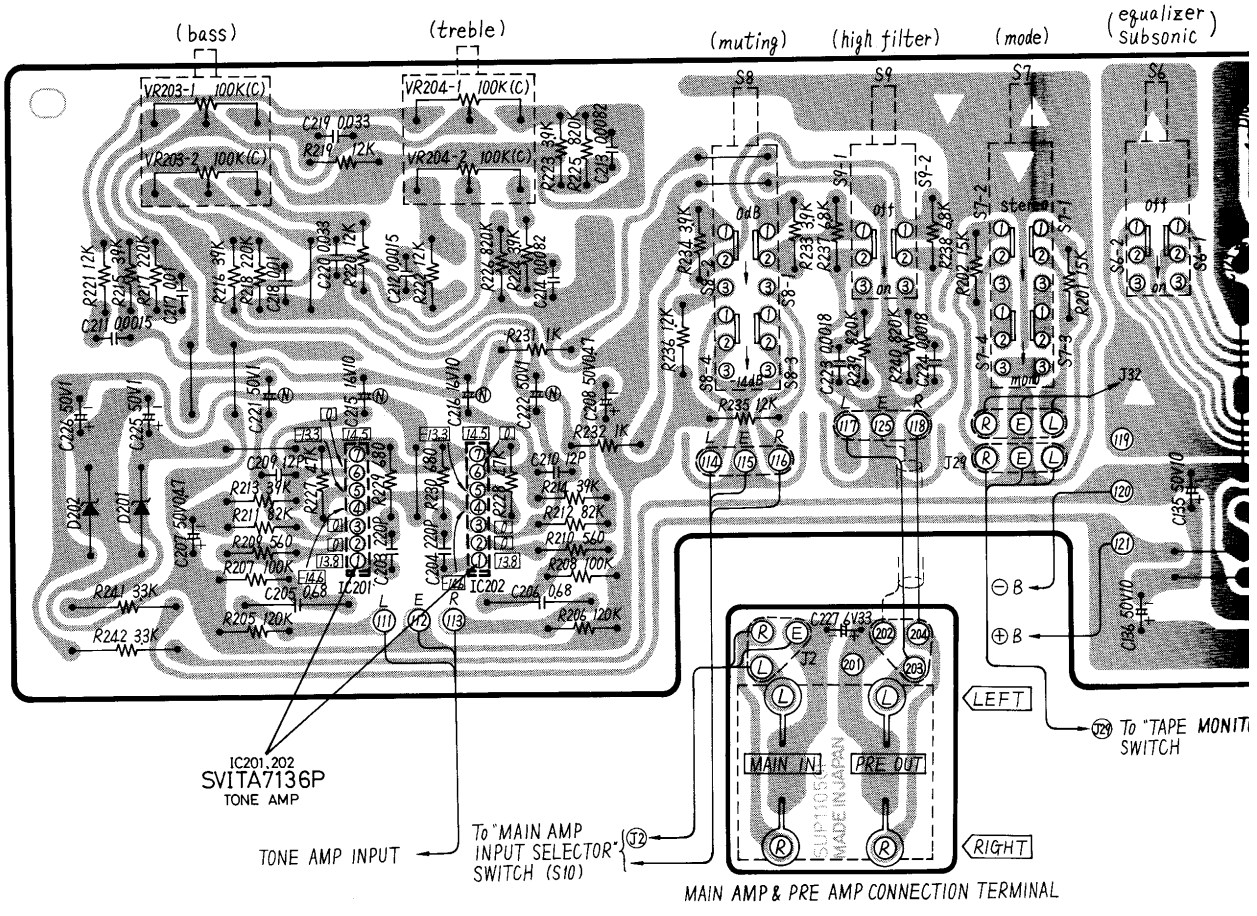

Downloaded from www.Manualslib.com manuals search engine

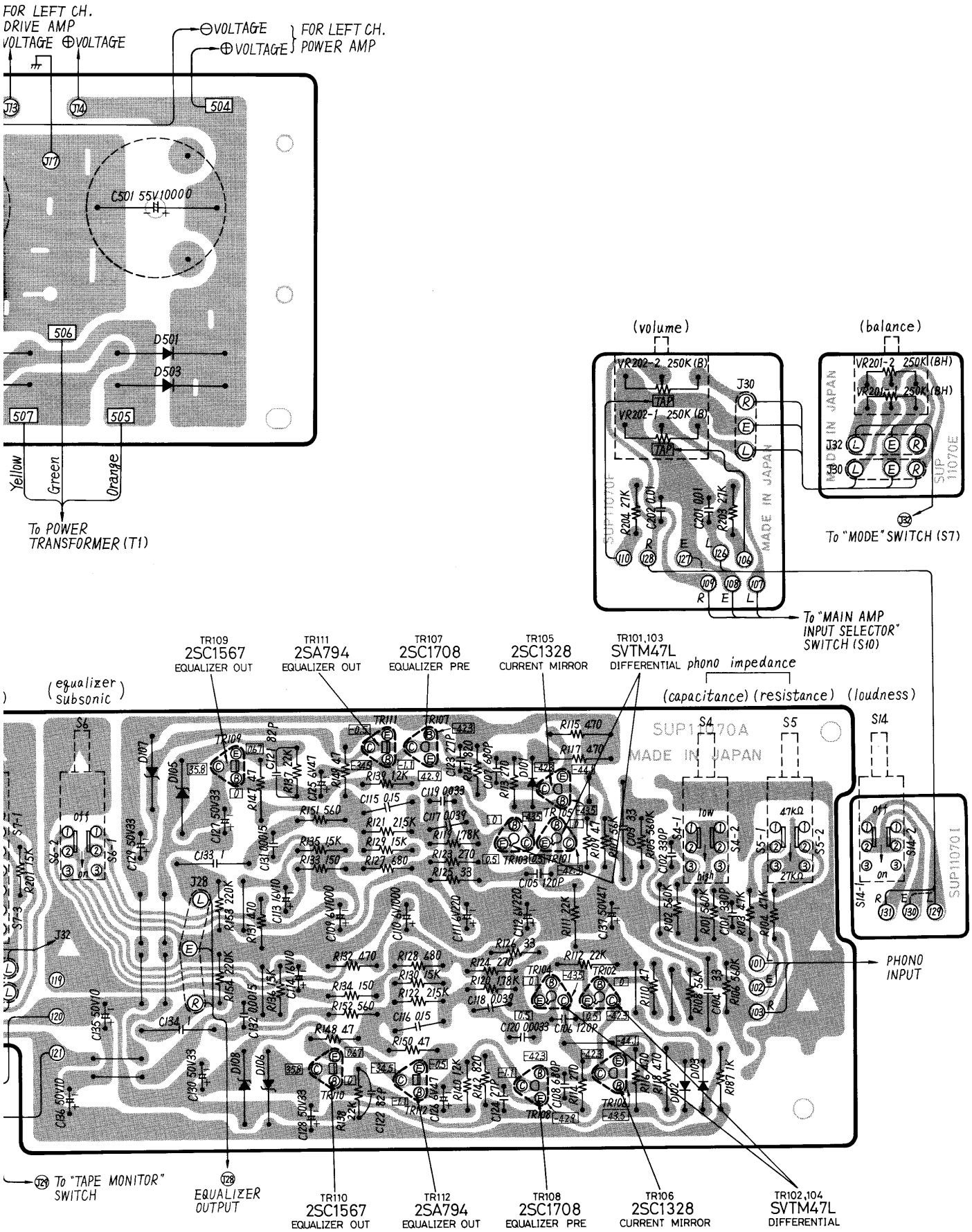

Downloaded from www.Manualslib.com manuals search engine

❹ INPUT & TAPE MONITOR SWITCH PRINTED CIRCUIT BOARD

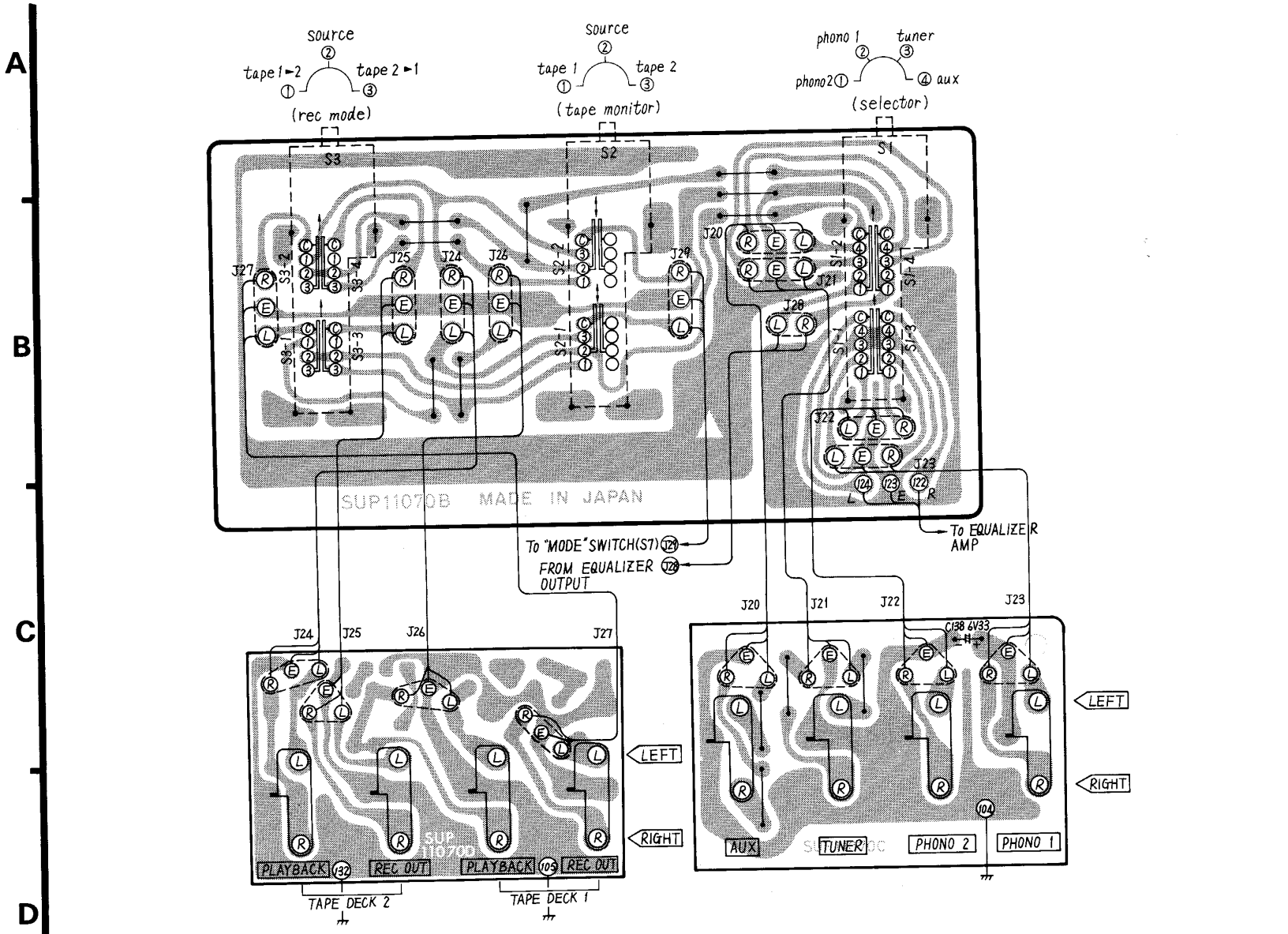

Downloaded from www.Manualslib.com manuals search engine

❺ PROTECTION & MAIN AMPLIFIER SELECTOR PRINTED CIRCUIT BOARD

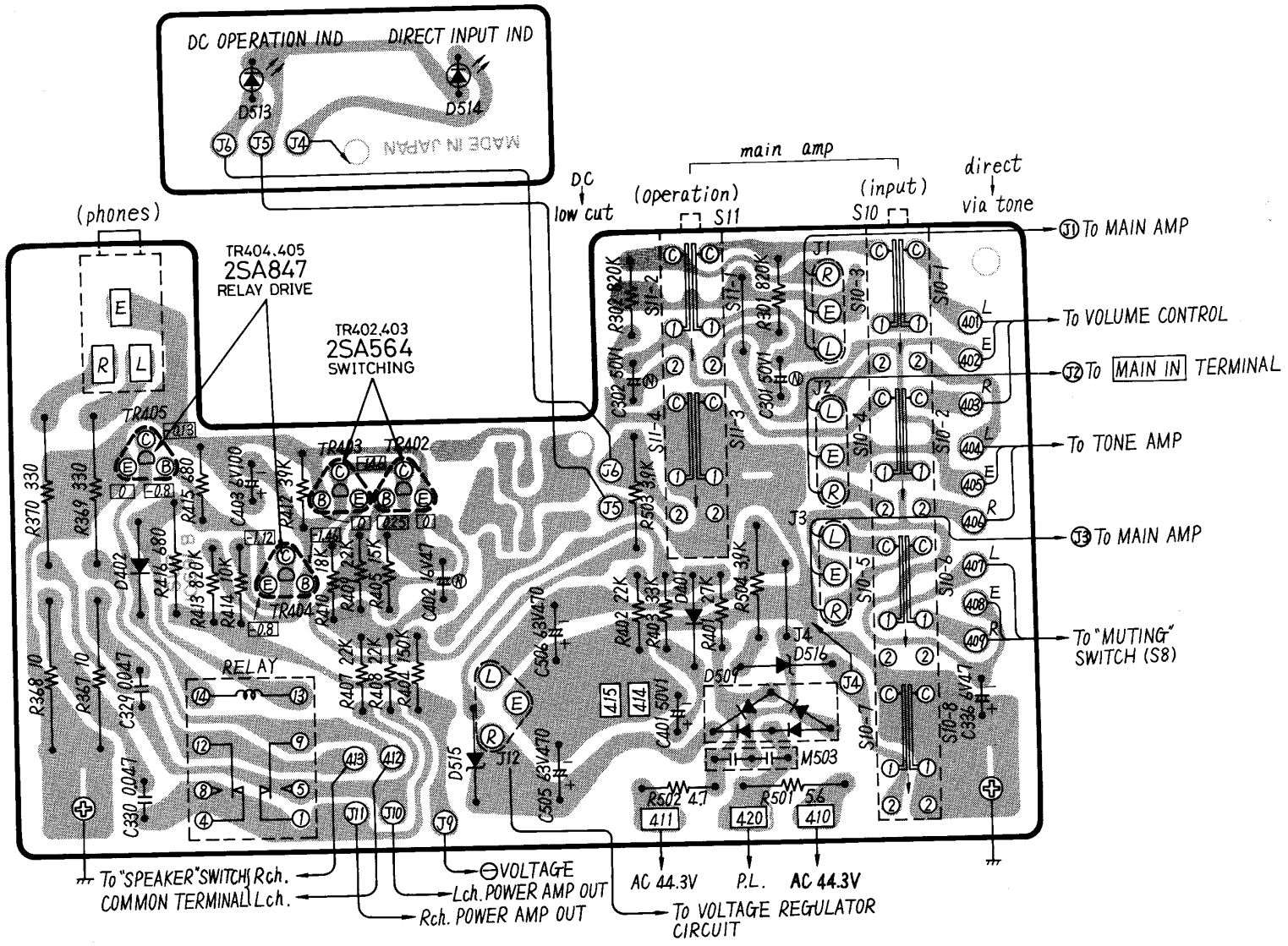

Downloaded from www.Manualslib.com manuals search engine

❻ SPEAKERS TERMINAL PRINTED CIRCUIT BOARD

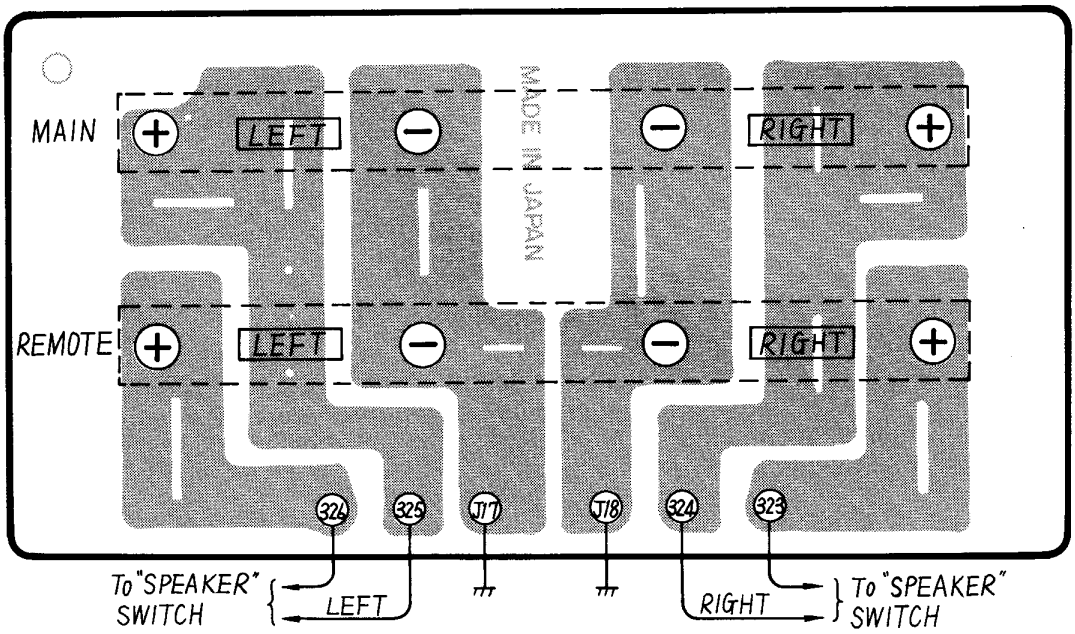

❼ POWER LIMITER PRINTED CIRCUIT BOARD (left or right channel)

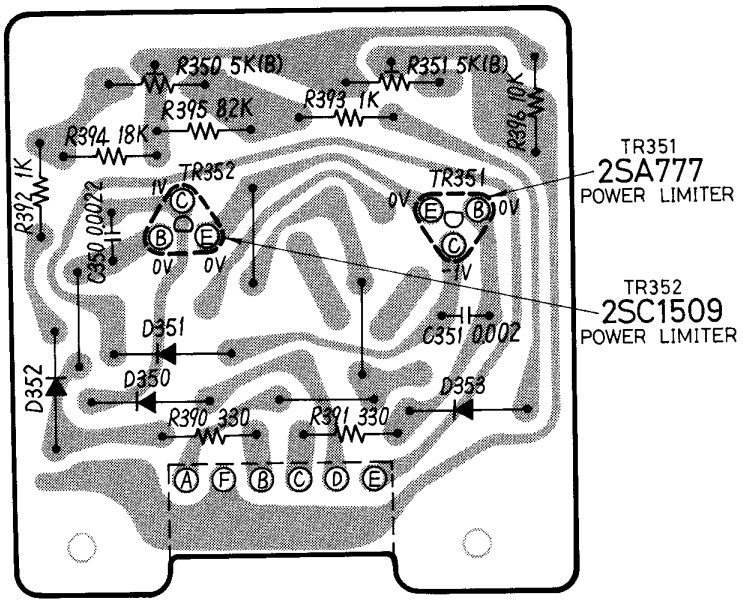

Downloaded from www.Manualslib.com manuals search engine

■ BLOCK DIAGRAM

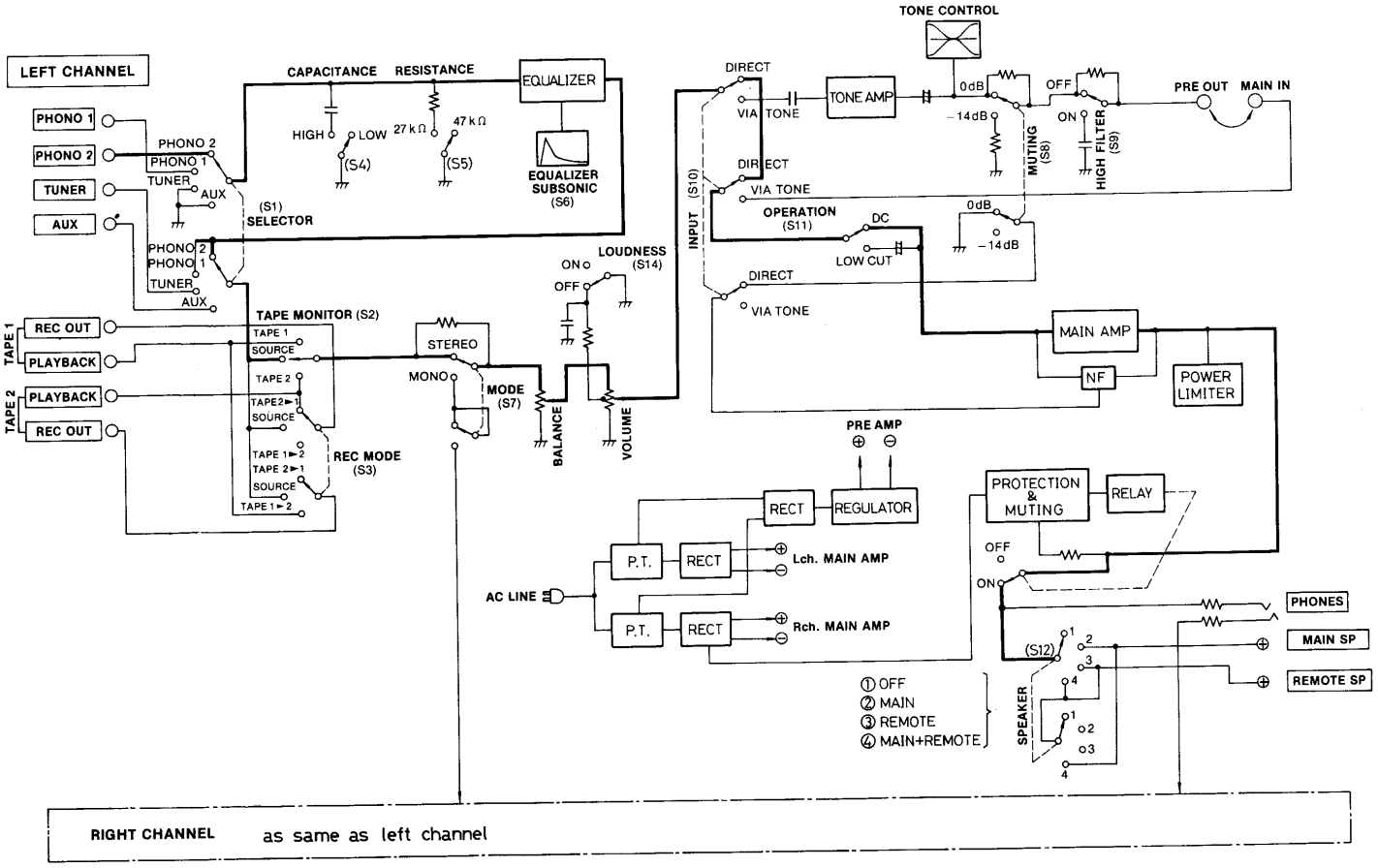

Downloaded from www.Manualslib.com manuals search engine

Schematic Diagram ..... Model SU-8080

(This schematic diagram may be modified at any time with the development of new technology.)

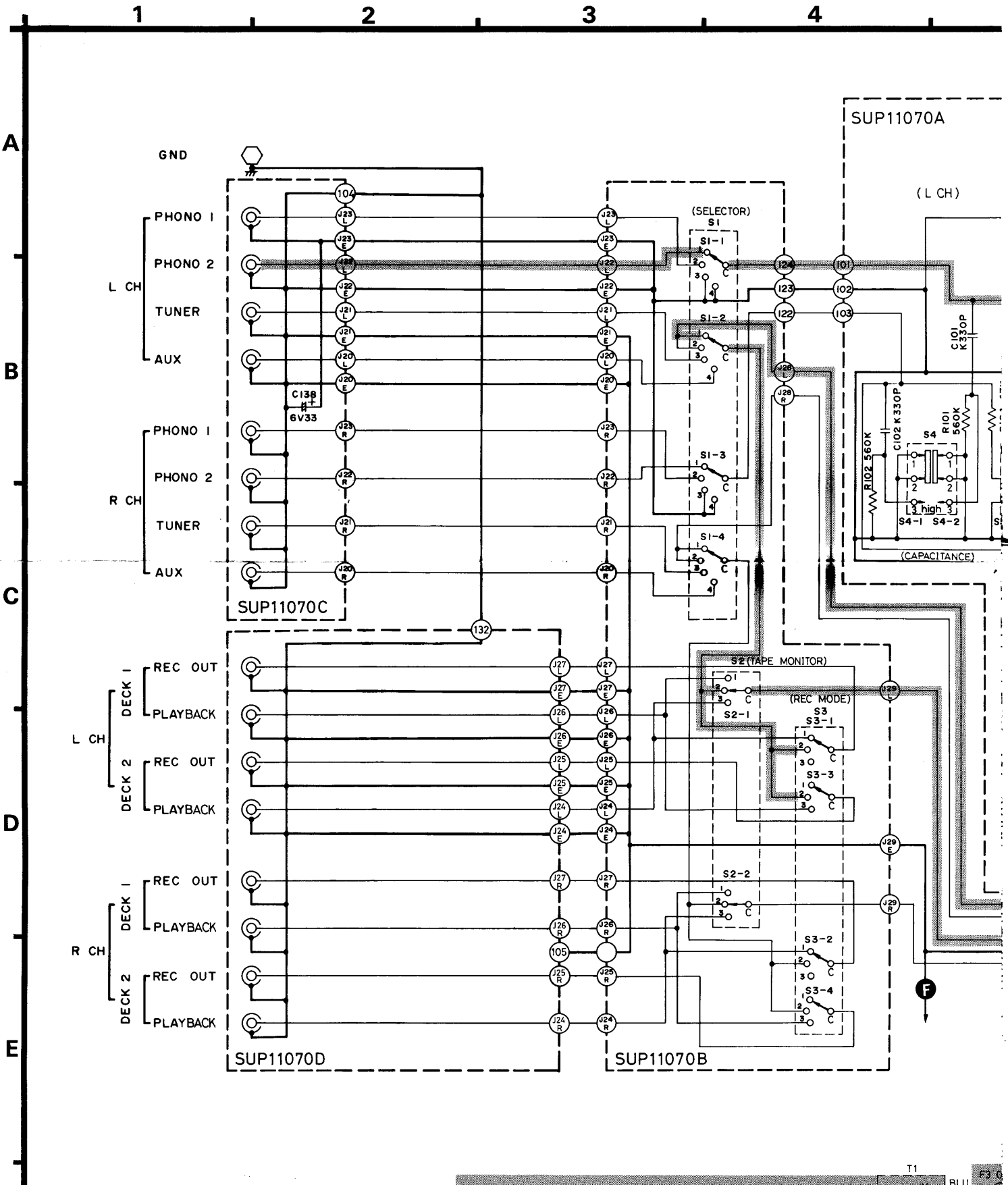

Downloaded from www.Manualslib.com manuals search engine

■ BLOCK DIAGRAM

IC101, IC102
(SVITA7136P)

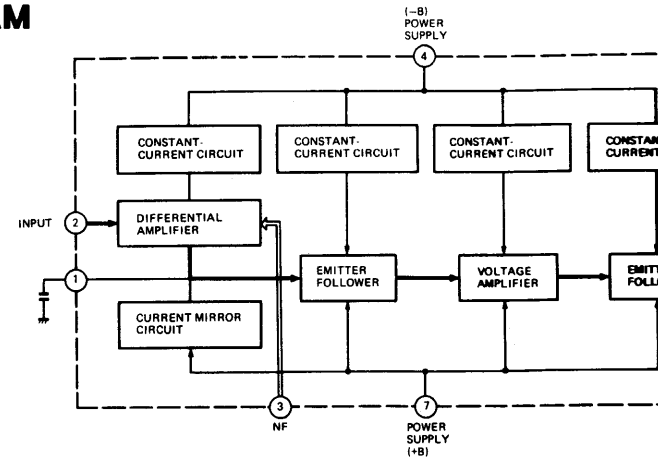

5 6 7 8 9 10

D101~103 MA150
TR101~104 SVTM47L DIFFERENTIAL
TR105, 106 2SC1328 CURRENT MIRROR
TR107, 108 2SC1708 EQUALIZER PRE
TR109, 110 2SC1567 EQUALIZER OUT
TR111, 112 2SA794 EQUALIZER OUT
D105~108 SVDUZ-11B
D201, 202 SVDMZ314
IC201, 202 SVITA7136P TONE AMP

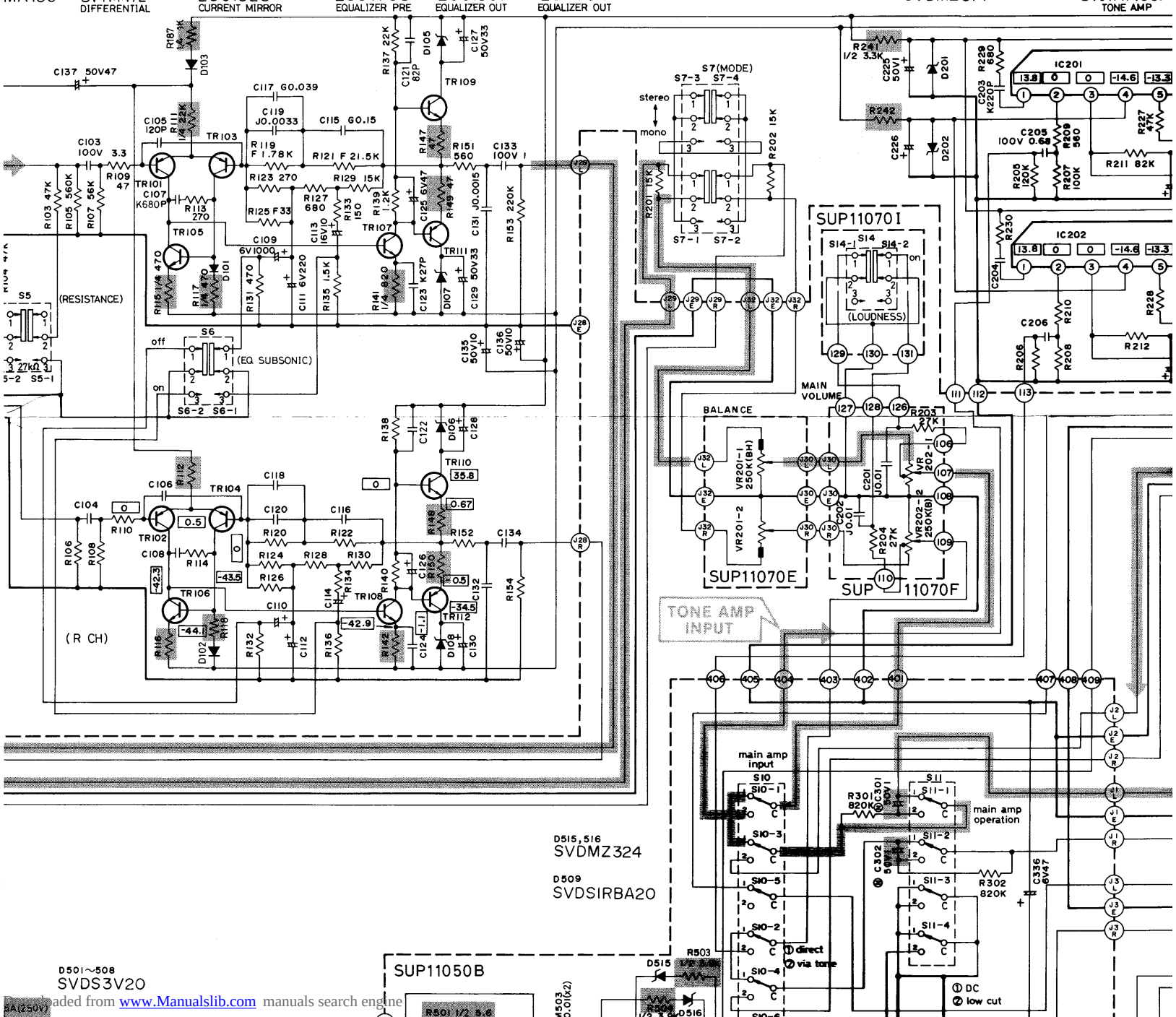

Downloaded from www.Manualslib.com manuals search engine

■ TERMINAL GUIDE

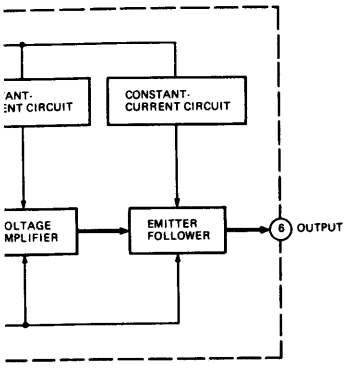

2SA798A	2SA564, 2SA722 2SC828, 2SC1328	SVTM47L	2SC1628
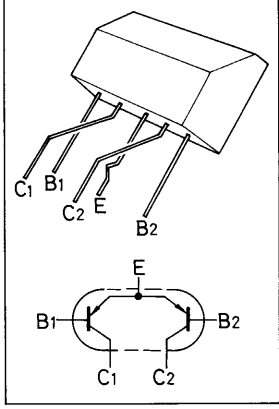	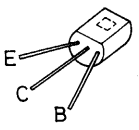	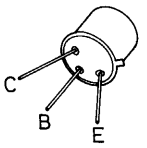	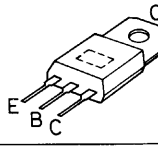
	2SA847, 2SC1508	2SA794, 2SC1567	2SA913, 2SC19
	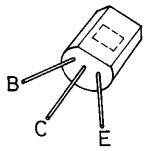	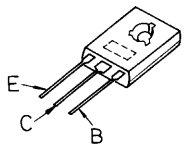	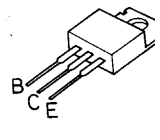

10 11 12 13 14

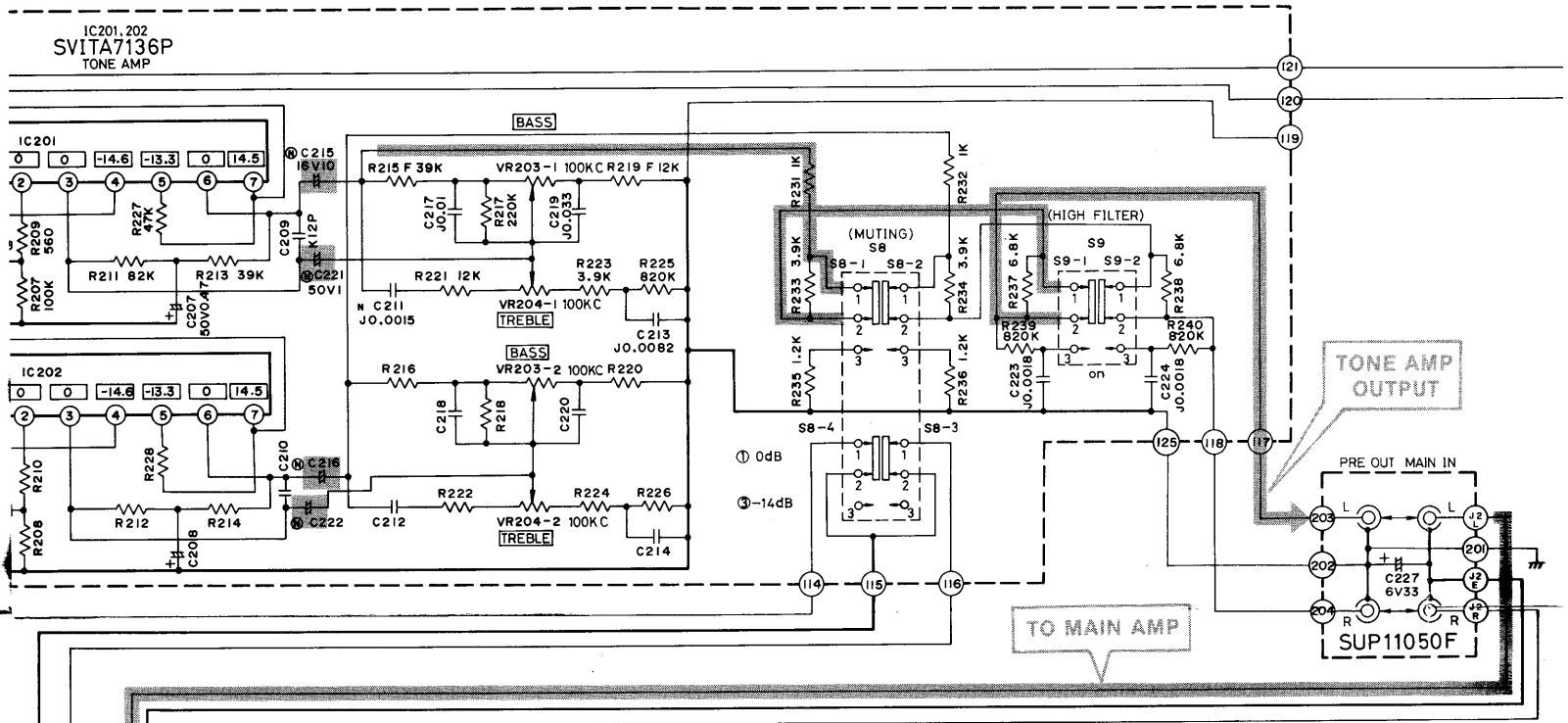

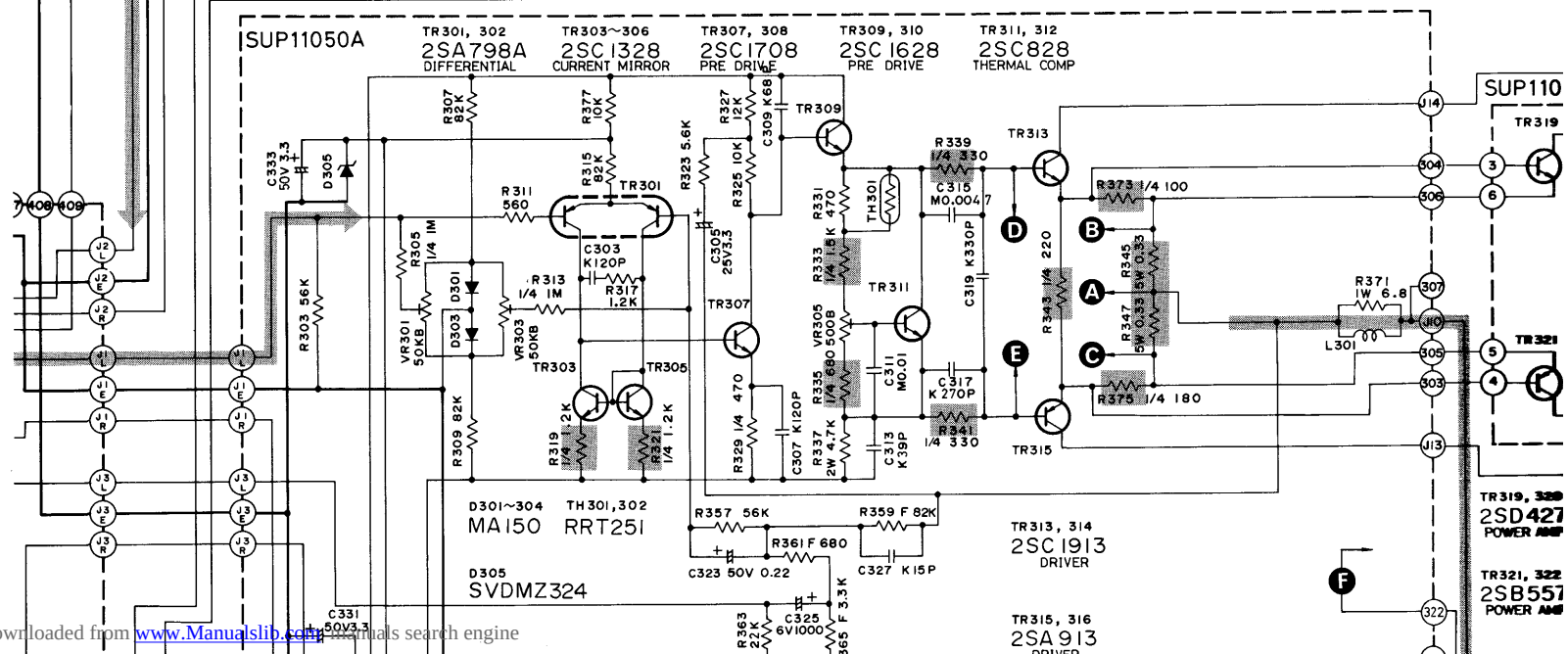

Downloaded from www.Manualslib.com manuals search engine

2SC1628	SVITA7136P
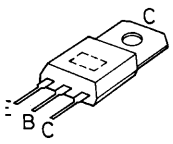	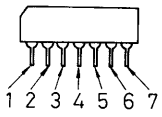
SA913, 2SC1913	2SB557, 2SD427
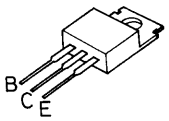	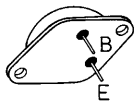

IMPORTANT SAFETY NOTICE
THE SHADED AREA ON THIS SCHEMATIC DIAGRAM INCORPORATES SPECIAL FEATURES IMPORTANT FOR SAFETY. WHEN SERVICING IT IS ESSENTIAL THAT ONLY MANUFACTUR'S SPECIFIED PARTS BE USED FOR THE CRITICAL COMPONENTS IN THE SHADED AREAS OF THE SCHEMATIC.

Notes:

1. **S1-1 ~S1-4;** Input selector switch in **"phono 2"** position.
   ① phono 2 ⟷ ② phono 1 ⟷ ③ tuner ⟷ ④ aux
2. **S2-1 ~S2-2:** Tape monitor switch in **"source"** position.
   ① tape 1 ⟷ ② source ⟷ ③ tape 2
3. **S3-1 ~S3-4:** Recording mode switch in **"tape 2 ▶1"** position.
   ① tape 2 ▶1 ⟷ ② source ⟷ ③ tape 1 ▶2
4. **S4-1 S4-2:** Phono impedance (capacitor) switch in **"low"** position.
   ① low ⟷ ③ high
5. **S5-1, S5-2:** Phono impedance (resistance) switch in **"47kΩ"** position.
   ① 47kΩ ⟷ ③ 27kΩ
6. **S6-1, S6-2:** Equalizer subsonic filter switch in **"off"** position.
   ① off ⟷ ③ on
7. **S7-1 ~S7-4:** Mode switch in **"stereo"** position.
   ① stereo ⟷ ③ mono
8. **S8-1 ~S8-4:** Muting switch in **"0dB"** position.
   ① 0 dB ⟷ ③ −14 dB
9. **S9-1 ~S9-2:** High filter switch in **"off"** position.
   ① off ⟷ ③ on
10. **S10-1 ~S10-7:** Main amplifier input switch in **"direct"** position.
    ① direct ⟷ ② via tone
11. **S11-1 ~S11-4:** Main amplifier operation switch in **"DC"** position.
    ① DC ⟷ ② low cut (2 Hz)
12. **S12-1, S12-2:** Speaker selector switch in **"off"** position.
    off ⟷ **main** ⟷ remote ⟷ main + remote
13. **S13:** Power source switch in **"off"** position.
14. **S14-1, S14-2:** Loudness switch in "off" **position**
    ① on ⟷ ③ off
15. ▭ **Indicated voltage values are the standard values for the unit** measured by the DC electronic circuit tester (high impedance) with the chassis taken as standard.
    Therefore, there may exist some errors in the voltage values, depending on the internal impedance of the DC circuit tester.

PHONO 2 SIGNAL LINE

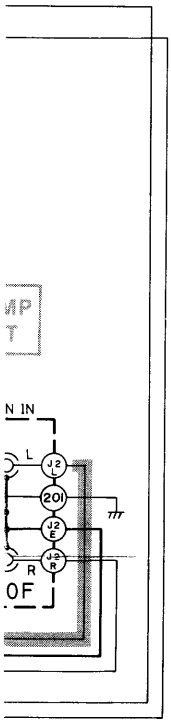

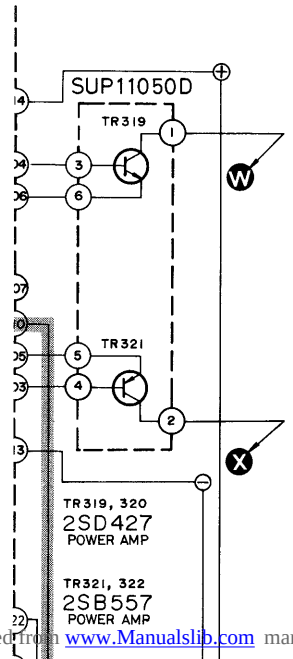

■ POWER LIMITER

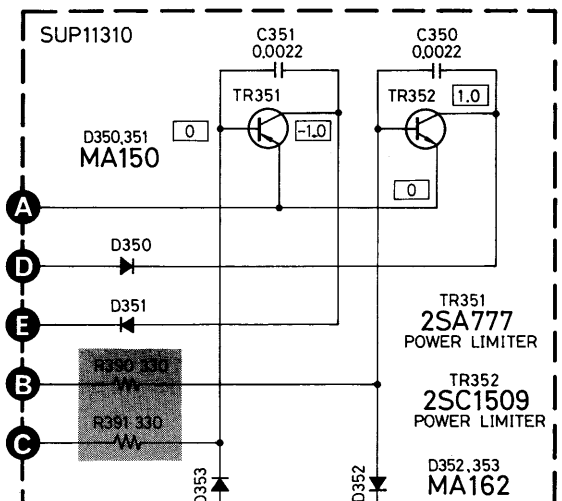

Downloaded from www.Manualslib.com manuals search engine

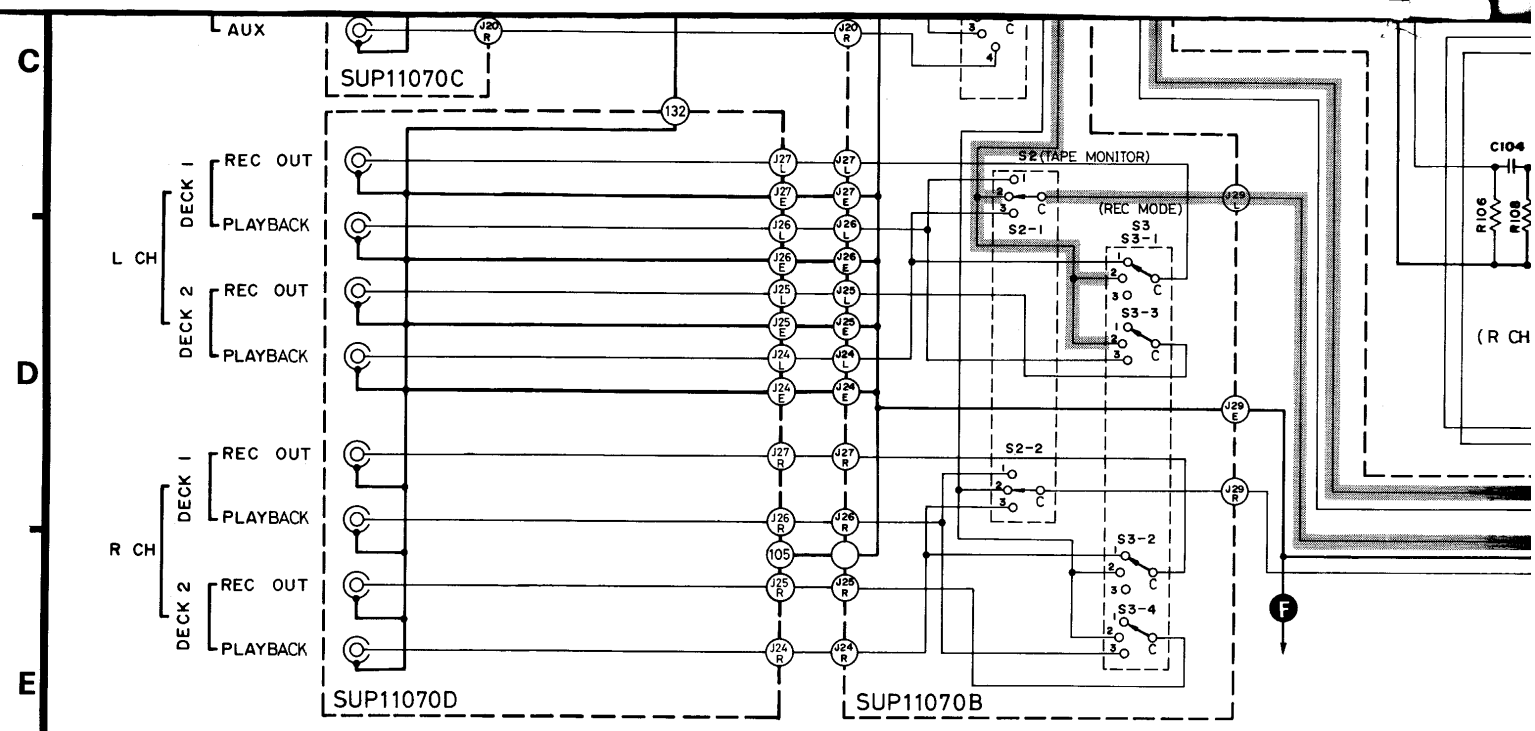

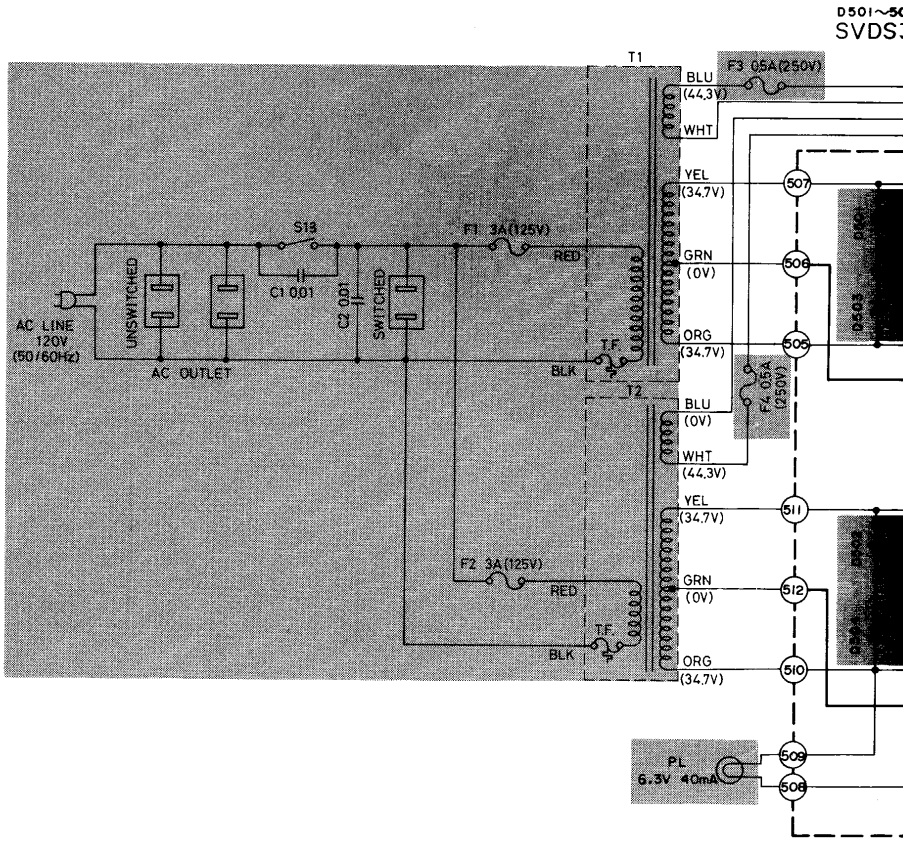

Downloaded from www.Manualslib.com manuals search engine

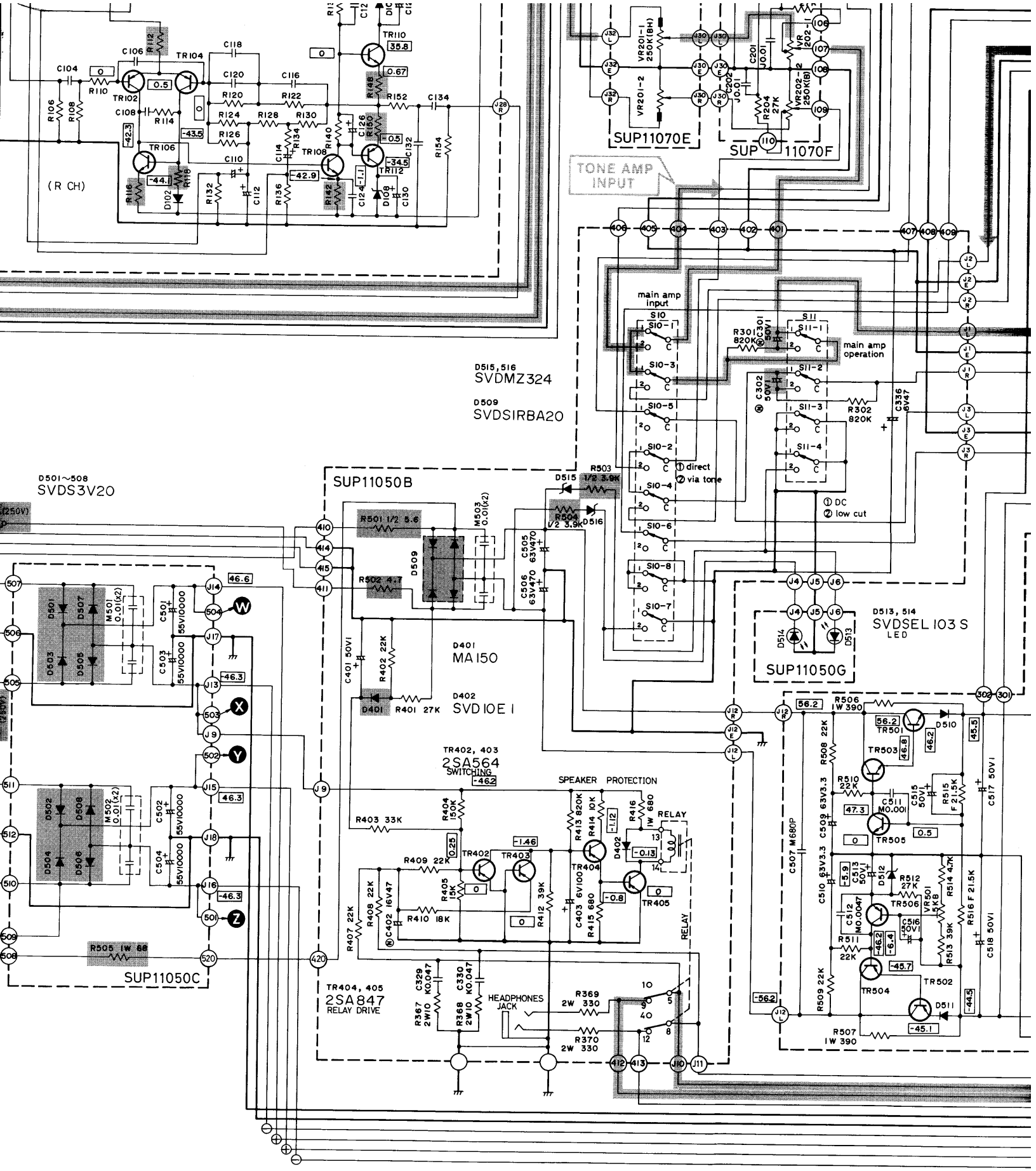

5 6 7 8 9 10

Downloaded from www.Manualslib.com manuals search engine

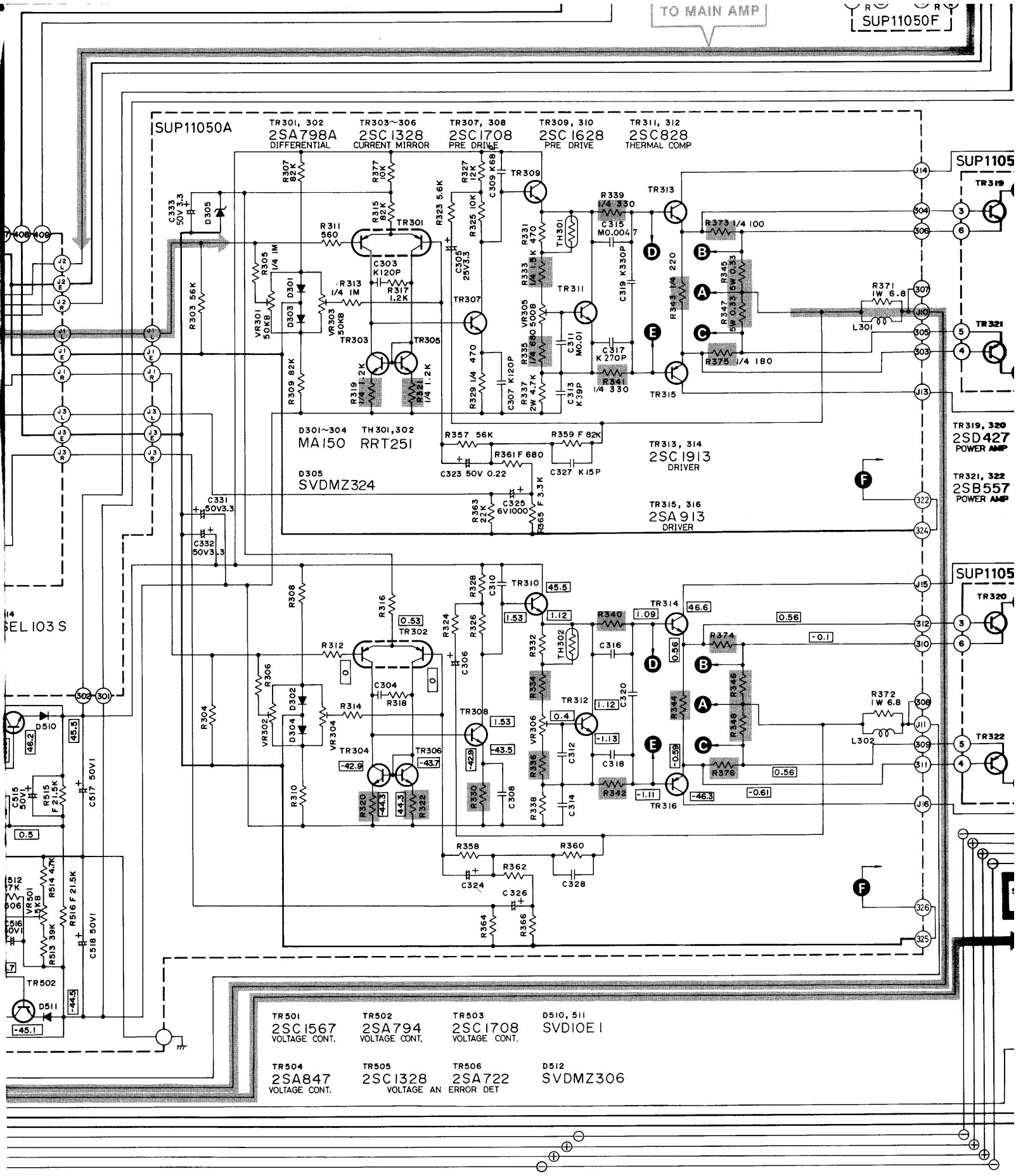

Downloaded from www.Manualslib.com manuals search engine

Therefore, there may exist some errors in the voltage values, depending on the internal impedance of the DC circuit tester.

PHONO 2 SIGNAL LINE

■ POWER LIMITER

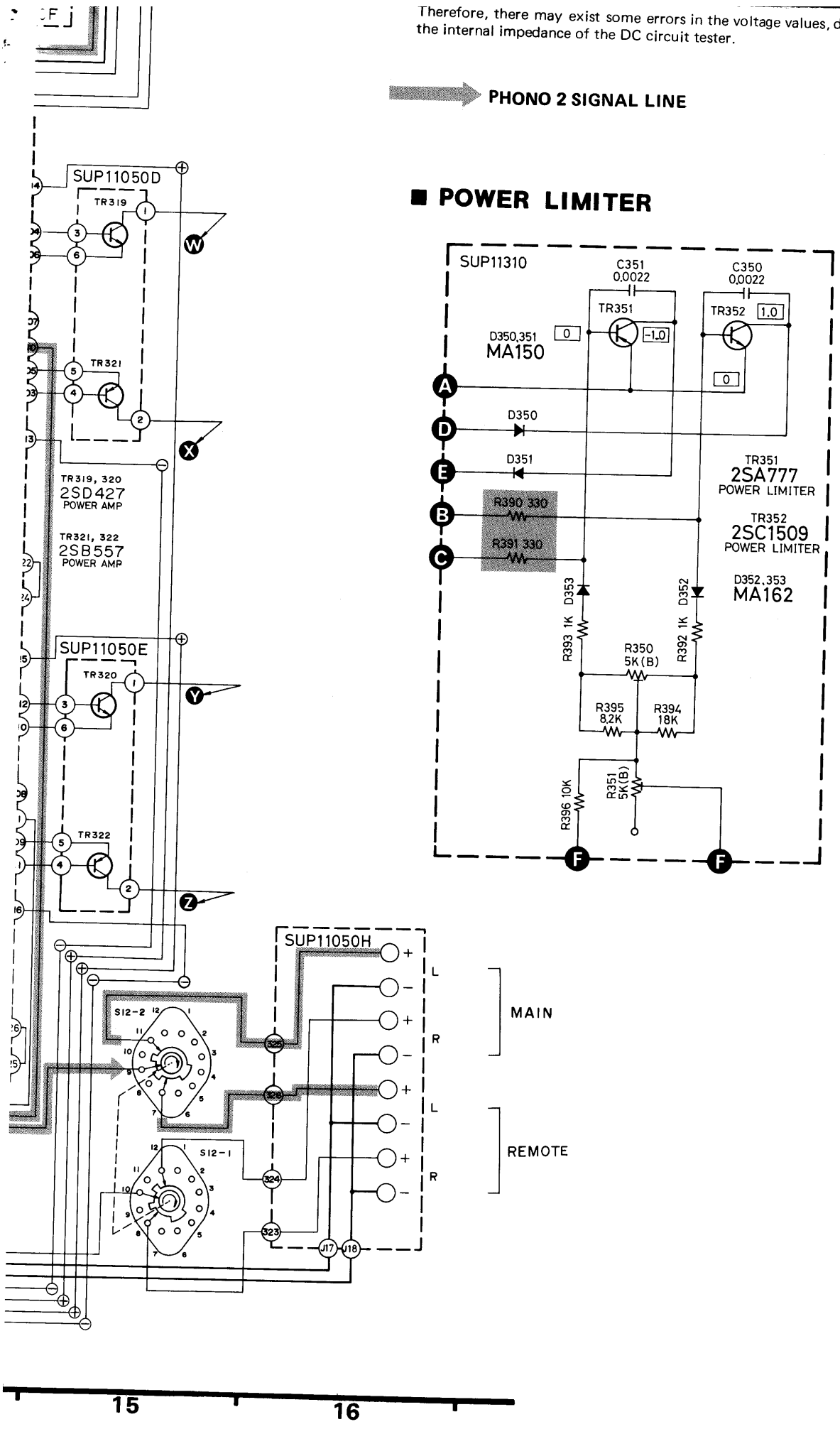

Downloaded from www.Manualslib.com manuals search engine

■ BEFORE STARTING THE REPAIRING

• For repairing this unit, be particularly careful about the following points.
Since 4 capacitors of latge capacity at 1000μF are amploued for power source, charged voltage remains for a long period of time once the power supply is turned on, with danger of electric shock if the (+) and (−) power voltage line is touched with hands. Therefore, before repairing, be sure to short-circuit opposite poles of the 10000μF capacitor (C501 ~C504) with a resistor approximately of "15Ω 10W" for discharging the charged voltage. Short-circuiting with a screw driver and the like is not only dangerous, but may destroy transistors and diodes, and should therefore be avoided.

■ ALIGNMENT INSTRUCTIONS

• Instruments to be used

1. DC electronic voltmeter.
2. 8Ω load resistance (to be connected to the speaker terminals only during DC balance adjustment)

• Conditions of the set

1. Turn the sound volume to minimum (Condition for all adjustments)
2. Other conditions should be in agreement with those for each adjustment.

1. ADJUSTMENT OF (−B) VOLTAGE (NEGATIVE POWER SUPPLY)

Connection of DC voltmeter	Conditions	Portions to be adjusted	Adjusting procedures
To be connected between 119 and 120 terminals.	None	VR501	To be adjusted to −44.5V ±0.1V

2. ADJUSTMENT OF SPEAKER TERMINAL DC BALANCE

Connection of DC voltmeter and 8Ω load resistance	Conditions	Portions to be adjusted	Adjusting procedures
For left and right channels of the speaker, connect the voltmeter in parallel with resistor.	1 Set the operation change-over to "DC". 2 Set the input change-over to "via tone". 3 Short-circuit the "MAIN IN" terminals.	VR303 (left ch.) VR304 (right ch.)	Adjust to 0mV at as small a range as possible.
	1 Set the operation change-over to "low cut". 2 Set the input change-over to "via tone". 3 Short-circuit the "MAIN IN" terminal.	VR301 (left ch.) VR302 (right ch.)	Adjust to 0mV at as small a range as possible.

3. ICQ (IDLING OF POWER TRANSISTOR) ADJUSTMENT

Conndtion of DC voltmeter	Conditions	Portions to be adjusted	Adjusting procedures
(left ch.) . . Connect between 305 and 307 terminals. (right ch.) . . Connect between 308 and 310 terminals.	Make adjustment over 5 minutes after turning "ON" the power source.	VR305 (left ch.) VR306 (right ch.)	Adjust to 15mV.

In the case where ICQ adjustment is made through current adjustment by the circuit tester (In this case, the DC voltmeter is not required.)

Note:
1. For using the circuit tester, be sure to turn the power source "OFF" for discharging the charge voltage as in "Before starting the repairing".
2. Subsequently, connect the circuit tester perfectly so as not to be disengaged.
3. After adjustments also, the lead wires should be perfectly soldered as in the original state, only after turning "OFF" of the power source.
4. Adjustments should be made about 5 minutes after turning "ON" of the power source.

• In the case of left channel

① With the rear panel of the set removed, disconnect the lead wire of 504 terminal soldered to the power supply printed circuit board for the main amplifier, and connect the circuit tester in the DC current measuring range as in fig. 3.

② Adjust VR305 to reach 25 ~ 30mA (may differ to a certain extent depending on internal impedances of the circuit tester)

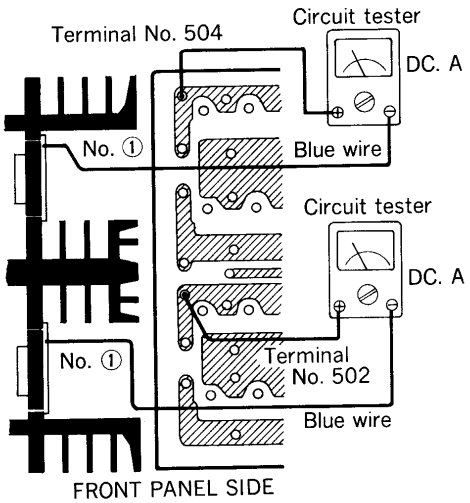

Fig. 3

(In the case of right channel)

1. Disconnect the lead wire of 502 terminal in the similar manner as in left channel., and connect the circuit tester.
2. Adjust VR306 to obtain 25~30 mA.

Downloaded from www.Manualslib.com manuals search engine

4. ADJUSTMENT OF POWER LIMITER (as same as left channel and right channel)

Adjustments by distortion meter	Adjustment by oscilloscope
① Connect the distortion meter to the speaker terminals with the volume control turned to maximum. ② Keep R351 of the power limiter circuit fully turned to the left. ③ Apply 1 kHz signal to the set so that the output is clipped to 5% distortion. ④ Adjust R350 so that the output distortion is reduced to minimum. ⑤ Adjust R351 so that the output distortion becomes 5.5%.	① Connect the oscilloscope to the speaker terminals with the volume control turned to maximum. ② Keep R351 of the power limiter circuit fully turned to the left. ③ Apply 1 kHz signal to the set that the output reaches the clip point. ④ Adjust R350 so that the waveform becomes vertically symmetrical. (Fig. 4) ⑤ Adjust R351 so that the upper and lower portions of the waveform are clipped to a slight extent (Fig. 5).

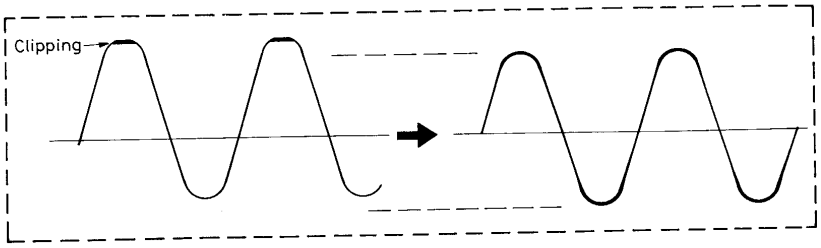

Fig. 4

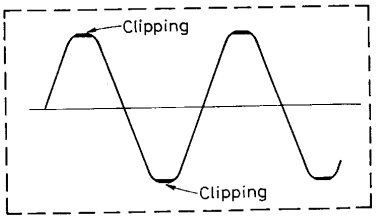

Fig. 5

■ DIAGRAM FOR PORTIONS TO BE ADJUSTED

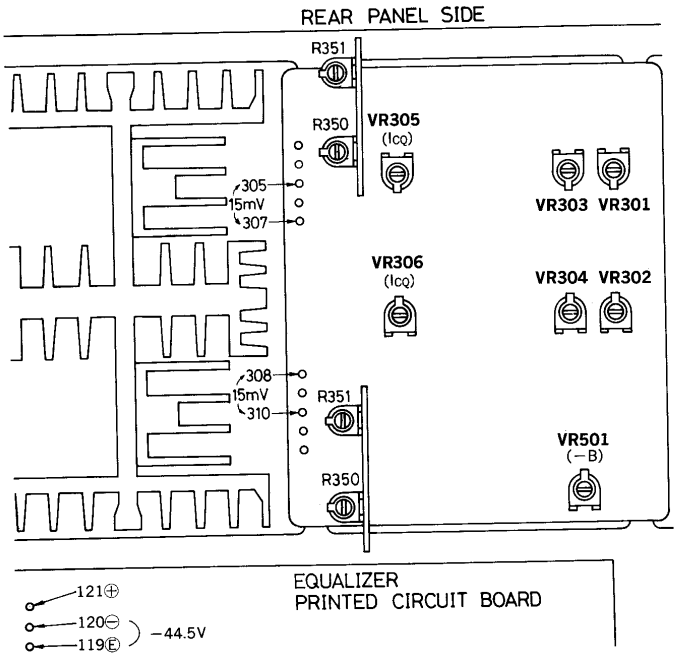

Fig. 6

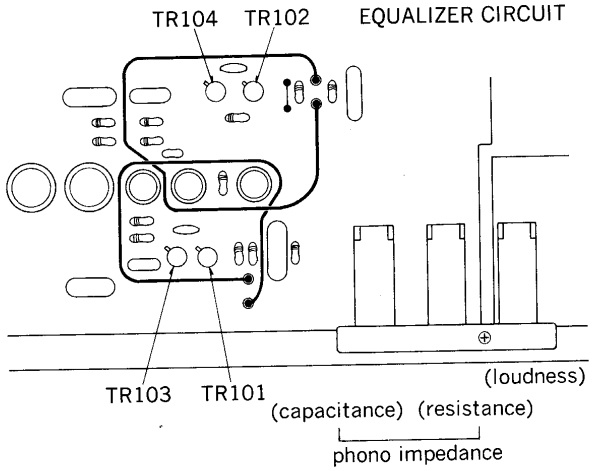

Fig. 7

■ ARRANGENEMTS OF WIRING AFTER REPAIRING

S/N for the equalizer circuit is delicately affected by the location of wirings. After repairing the circuit, form the lead wires into a loop shape as shown in fig. 7. By this arrangement, effect for offsetting the hum noise can be obtained. Additionally, the wires led from the print base (lower stage) of the relay circuit should be bundled together with the wires to the speaker terminals to avoid approaching to the tone amplifier print base at the upper stage. If these wires are brought close to the tone amplifier section, residual noises may be increased.

Downloaded from www.vintagedub.com manuals search engine

■ REPLACEMENT PARTS LIST

Important Safety Notice

Components identified by shaded area have special characteristics important for safety. When replacing any of these components use only manufacturer's specified parts.

NOTE: 1. Part numbers are indicated on most mechanical parts.
Please use this part number for parts orders.

Ref. No.	Part No.	Part Name & Description	Per Set	Remarks
INTEGRATED CIRCUITS				
IC 201, 202	SVITA7136PM	IC, Tone Amplifier	2	
TRANSISTORS				
TR101, 102, 103, 104	SVTM47L	Transistor, Differential Amplifier (Use in ranks S. T or U)	4	O
TR105, 106	**2SC1328-T**	Transistor, Currentmirror (Use in ranks S. Tor U)	2	
TR107, 108, 307, 308, 503	2SC1708-G	Transistor, Equalizer & Pre Drive Amplifier (Use in ranks F or G)	5	
T109, 110	**2SC1567-Q**	Transistor, Equalizer Output Amplifier (Use in ranks Q or R)	2	
TR111, 112	**2SA794-Q**	Transistor, Equalizer Output Amplifier (Use in ranks Q or R)	2	
TR301, 302	**2SA798A-G2**	Transistor, Differential Amplifier (Use in ranks F2 or G2)	2	
TR303, 304, 305 306, 505	**2SC1328-T**	Transistor, Currentmirror (Use in ranks S. T or U)	5	
TR 309, 310	2SC1628-Y	Transistor, Pre Drive Amplifier (Use in ranks O or Y)	2	
TR311, 312	**2SC828 A-R**	Transistor, Thermal Compensation	2	
TR313, 314	2SC1913-R	Transistor, Drive Amplifier (Use in ranks Q,R or S)	2	
TR315, 316	2SA913-R	Transistor, Drive Amplifier (Use in ranks Q,R or S)	2	
TR319, 320	2SD427-0	Transistor, Power Amplifier (Use in ranks O or R) Use in pair ranks	2	
TR321, 322	2SB557-0	Transistor, Power Amplifier (Use in ranks O or R) Use in pair ranks	2	
TR351 (X2)	**2SA777-Q**	Transistor, Power Limiter (Use in ranks Q or R)	2	
TR352 (X2)	2SC1509F-Q	Transistor, Power Limiter (Use in ranks Q or R)	2	
TR402, 403	**2SA666AI-R**	Transistor, Switching	2	
TR404, 405, 504	2SA847-G	Transistor, Relay Drive Amplifier (Use in ranks F or G)	3	
TR501	**2SC1567-Q**	Transistor, Voltage Control Amplifier (Use in ranks Q,R or S)	1	
TR502	**2SA794-Q**	Transistor Voltage Control Amplifier (Use in ranks Q,R or S)	1	
TR506	**2SA902S-F**	Transistor, Voltage Error Detector	1	
DIODES				
D101, 102, 103 301, 302, 303 304, 350 (X2) 351 (X2), 401	MA150	Diode, Switching	12	
D105, 106, 107 108	SVDUZ-11B	Zener Diode, 11V	4	
D201, 202	SVDMZ314C	Zener Diode, 14V	2	O
D305, 515, 516	SVDMZ324	Zener Diode, 24V	3	O
D352(X2),353(X2)	MA162	Diode, Switching,	4	
D402, 510, 511	SVD10E1	Diode	3	
D501, 502, 503 504, 505, 506 507, 508	SVDS3V20	Rectifier	8	O
D509	SVDS1RBA20	Rectifier	1	O
D512	SVDMZ306	Zener Diode, 6V	1	
D513, 514	SVDSEL103S	Light Emitting Diode	2	
COILS and TRANSFORMERS				
L301, 302	SLQY15G-1U	Coil, Compensation	2	
T1, 2	SLT5P87	Power Transformer	2	O
THERMISTERS				
TH301, 302	RRT251	Thermister	2	
RESISTORS				
R101	**ERD25TJ564**	Carbon, 560kΩ, 1/4W, ± 5%	1	
R102	**ERD25TJ564**	Carbon, 560kΩ, 1/4W, ± 5%	1	
R103	**ERD25TJ473**	Carbon, 47kΩ, 1/4W, ± 5%	1	
R104	**ERD25TJ473**	Carbon, 47kΩ, 1/4W, ± 5%	1	
R105	**ERD25TJ564**	Carbon, 560kΩ, 1/4W, ± 5%	1	
R106	**ERD25TJ564**	Carbon, 560kΩ, 1/4W, ± 5%	1	
R107	**ERD25TJ563**	Carbon, 56kΩ, 1/4W, ± 5%	1	
R108	**ERD25TJ563**	Carbon, 56kΩ, 1/4W, ± 5%	1	
R109	**ERD25TJ470**	Carbon, 47Ω, 1/4W, ± 5%	1	
R110	**ERD25TJ470**	Carbon, 47Ω, 1/4W, ± 5%	1	
R111	**ERD14FJ223**	Carbon, 22kΩ, 1/4W, ± 5%	1	
R112	**ERD14FJ223**	Carbon, 22kΩ, 1/4W, ± 5%	1	
R113	**ERD25TJ271**	Carbon, 270Ω, 1/4W, ± 5%	1	
R114	**ERD25TJ271**	Carbon, 270Ω, 1/4W, ± 5%	1	
R115	**ERD14FJ471**	Carbon, 470Ω, 1/4W, ± 5%	1	
R116	**ERD14FJ471**	Carbon, 470Ω, 1/4W, ± 5%	1	
R117	**ERD14FJ471**	Carbon, 470Ω, 1/4W, ± 5%	1	
R118	**ERD14FJ471**	Carbon, 470Ω, 1/4W, ± 5%	1	
R119	ERO25CKF1781	Metal Film, 1.78kΩ, 1/4W, ± 1%	1	
R120	ERO25CKF1781	Metal Film, 1.78kΩ, 1/4W, ± 1%	1	
R121	ERO25CKF2152	Metal Film, 21.5kΩ, 1/4W, ± 1%	1	
R122	ERO25CKF2152	Metal Film, 21.5kΩ, 1/4W, ± 1%	1	
R123	**ERD25TJ271**	Carbon, 270Ω, 1/4W, ± 5%	1	
R124	**ERD25TJ271**	Carbon, 270Ω, 1/4W, ± 5%	1	
R125	ERO25CKF33RO	Metal Film, 33Ω, 1/4W, ± 1%	1	
R126	ERO25CKF33RO	Metal Film, 33Ω, 1/4W, ± 1%	1	
R127	**ERD25TJ681**	Carbon, 680Ω, 1/4W, ± 5%	1	
R128	**ERD25TJ681**	Carbon, 680Ω, 1/4W, ± 5%	1	
R129	**ERD25TJ153**	Carbon, 15kΩ, 1/4W, ± 5%	1	
R130	**ERD25TJ153**	Carbon, 15kΩ, 1/4W, ± 5%	1	
R131	**ERD25TJ471**	Carbon, 470Ω, 1/4W, ± 5%	1	
R132	**ERD25TJ471**	Carbon, 470Ω, 1/4W, ± 5%	1	
R133	**ERD25TJ151**	Carbon, 150Ω, 1/4W, ± 5%	1	
R134	**ERD25TJ151**	Carbon, 150Ω, 1/4W, ± 5%	1	
R135	**ERD25TJ152**	Carbon, 1.5kΩ, 1/4W, ± 5%	1	
R136	**ERD25TJ152**	Carbon, 1.5kΩ, 1/4W, ± 5%	1	
R237	**ERD25TJ682**	Carbon, 6.8kΩ, 1/4W, ± 5%	1	
R238	**ERD25TJ682**	Carbon, 6.8kΩ, 1/4W, ± 5%	1	
R239	**ERD25TJ824**	Carbon, 820kΩ, 1/4W, ± 5%	1	

Downloaded from www.Manualslib.com manuals search engine

Ref. No.	Part No.	Part Name & Description	Per Set	Remarks
R133	**ERD25TJ151**	Carbon, 150Ω, 1/4W, ± 5%	1	
R134	**ERD25TJ151**	Carbon, 150Ω, 1/4W, ± 5%	1	
R135	**ERD25TJ152**	Carbon, 1.5kΩ, 1/4W, ± 5%	1	
R136	**ERD25TJ152**	Carbon, 1.5kΩ, 1/4W, ± 5%	1	
R137	**ERD25TJ223**	Carbon, 22kΩ, 1/4W, ± 5%	1	
R138	**ERD25TJ223**	Carbon, 22kΩ, 1/4W, ± 5%	1	
R139	**ERD25TJ122**	Carbon, 1.2kΩ, 1/4W, ± 5%	1	
R140	**ERD25TJ122**	Carbon, 1.2kΩ, 1/4W, ± 5%	1	
R141	**ERD14FJ821**	Carbon, 820Ω, 1/4W, ± 5%	1	
R142	**ERD14FJ821**	Carbon, 820Ω, 1/4W, ± 5%	1	
R147	**ERD14FJ470**	Carbon, 47Ω, 1/4W, ± 5%	1	
R148	**ERD14FJ470**	Carbon, 47Ω, 1/4W, ± 5%	1	
R149	**ERD14FJ470**	Carbon, 47Ω, 1/4W, ± 5%	1	
R150	**ERD14FJ470**	Carbon, 47Ω, 1/4W, ± 5%	1	
R151	**ERD25TJ561**	Carbon, 560Ω, 1/4W, ± 5%	1	
R152	**ERD25TJ561**	Carbon, 560Ω, 1/4W, ± 5%	1	
R153	**ERD25TJ224**	Carbon, 220kΩ, 1/4W, ± 5%	1	
R154	**ERD25TJ224**	Carbon, 220kΩ, 1/4W, ± 5%	1	
R187	**ERD14FJ102**	Carbon, 1kΩ, 1/4W, ± 5%	1	
R201	**ERD25TJ153**	Carbon, 15kΩ, 1/4W, ± 5%	1	
R202	**ERD25TJ153**	Carbon, 15kΩ, 1/4W, ± 5%	1	
R203	**ERD25TJ273**	Carbon, 27kΩ, 1/4W, ± 5%	1	
R204	**ERD25TJ273**	Carbon, 27kΩ, 1/4W, ± 5%	1	
R205	**ERD25TJ124**	Carbon, 120kΩ, 1/4W, ± 5%	1	
R206	**ERD25TJ124**	Carbon, 120kΩ, 1/4W, ± 5%	1	
R207	**ERD25TJ104**	Carbon, 100kΩ, 1/4W, ± 5%	1	
R208	**ERD25TJ104**	Carbon, 100kΩ, 1/4W, ± 5%	1	
R209	**ERD25TJ561**	Carbon, 560Ω, 1/4W, ± 5%	1	
R210	**ERD25TJ561**	Carbon, 560Ω, 1/4W, ± 5%	1	
R211	**ERD25TJ823**	Carbon, 82kΩ, 1/4W, ± 5%	1	
R212	**ERD25TJ823**	Carbon, 82kΩ, 1/4W, ± 5%	1	
R213	**ERD25TJ393**	Carbon, 39kΩ, 1/4W, ± 5%	1	
R214	**ERD25TJ393**	Carbon, 39kΩ, 1/4W, ± 5%	1	
R215	ERO25CKF3902	Metal Film, 39kΩ, 1/4W, ± 1%	1	
R216	ERO25CKF3902	Metal Film, 39kΩ, 1/4W, ± 1%	1	
R217	**ERD25TJ224**	Carbon, 220kΩ, 1/4W, ± 5%	1	
R218	**ERD25TJ224**	Carbon, 220kΩ, 1/4W, ± 5%	1	
R219	ERO25CKF1202	Metal Film, 12kΩ, 1/4W, ± 1%	1	
R220	ERO25CKF1202	Metal Film, 12kΩ, 1/4W, ± 1%	1	
R221	**ERD25TJ123**	Carbon, 12kΩ, 1/4W, ± 5%	1	
R222	**ERD25TJ123**	Carbon, 12kΩ, 1/4W, ± 5%	1	
R223	**ERD25TJ392**	Carbon, 3.9kΩ, 1/4W, ± 5%	1	
R224	**ERD25TJ392**	Carbon, 3.9kΩ, 1/4W, ± 5%	1	
R225	**ERD25TJ824**	Carbon, 820kΩ, 1/4W, ± 5%	1	
R226	**ERD25TJ824**	Carbon, 820kΩ, 1/4W, ± 5%	1	
R227	**ERD25TJ473**	Carbon, 47kΩ, 1/4W, ± 5%	1	
R228	**ERD25TJ473**	Carbon, 47kΩ, 1/4W, ± 5%	1	
R229	**ERD25TJ681**	Carbon, 680Ω, 1/4W, ± 5%	1	
R230	**ERD25TJ681**	Carbon, 680Ω, 1/4W, ± 5%	1	
R231	**ERD25TJ102**	Carbon, 1kΩ, 1/4W, ± 5%	1	
R232	**ERD25TJ102**	Carbon, 1kΩ, 1/4W, ± 5%	1	
R233	**ERD25TJ392**	Carbon, 3.9kΩ, 1/4W, ± 5%	1	
R234	**ERD25TJ392**	Carbon, 3.9kΩ, 1/4W, ± 5%	1	
R235	**ERD25TJ122**	Carbon, 1.2kΩ, 1/4W, ± 5%	1	
R236	**ERD25TJ122**	Carbon, 1.2kΩ, 1/4W, ± 5%	1	

Ref. No.	Part No.	Part Name & Description	Per Set	Remarks
R237	**ERD25TJ682**	Carbon, 6.8kΩ, 1/4W, ± 5%	1	
R238	**ERD25TJ682**	Carbon, 6.8kΩ, 1/4W, ± 5%	1	
R239	**ERD25TJ824**	Carbon, 820kΩ, 1/4W, ± 5%	1	
R240	**ERD25TJ824**	Carbon, 820kΩ, 1/4W, ± 5%	1	
R241	ERD12FJ332	Carbon, 3.3kΩ, 1/2W, ± 5%	1	
R242	ERD12FJ332	Carbon, 3.3kΩ, 1/2W, ± 5%	1	
R301	**ERD25TJ824**	Carbon, 820kΩ, 1/4W, ± 5%	1	
R302	**ERD25TJ824**	Carbon, 820kΩ, 1/4W, ± 5%	1	
R303	**ERD25TJ563**	Carbon, 56kΩ, 1/4W, ± 5%	1	
R304	**ERD25TJ563**	Carbon, 56kΩ, 1/4W, ± 5%	1	
R305	**ERD25TJ105**	Carbon, 1MΩ, 1/4W, ± 5%	1	
R306	**ERD25TJ105**	Carbon, 1MΩ, 1/4W, ± 5%	1	
R307	**ERD25TJ823**	Carbon, 82kΩ, 1/4W, ± 5%	1	
R308	**ERD25TJ823**	Carbon, 82kΩ, 1/4W, ± 5%	1	
R309	**ERD25TJ823**	Carbon, 82kΩ, 1/4W, ± 5%	1	
R310	**ERD25TJ823**	Carbon, 82kΩ, 1/4W, ± 5%	1	
R311	**ERD25TJ561**	Carbon, 560Ω, 1/4W, ± 5%	1	
R312	**ERD25TJ561**	Carbon, 560Ω, 1/4W, ± 5%	1	
R313	**ERD25TJ105**	Carbon, 1MΩ, 1/4W, ± 5%	1	
R314	**ERD25TJ105**	Carbon, 1MΩ, 1/4W, ± 5%	1	
R315	**ERD25TJ823**	Carbon, 82kΩ, 1/4W, ± 5%	1	
R316	**ERD25TJ823**	Carbon, 82kΩ, 1/4W, ± 5%	1	
R317	**ERD25TJ122**	Carbon, 1.2kΩ, 1/4W, ± 5%	1	
R318	**ERD25TJ122**	Carbon, 1.2kΩ, 1/4W, ± 5%	1	
R319	**ERD14FJ122**	Carbon, 1.2kΩ, 1/4W, ± 5%	1	
R320	**ERD14FJ122**	Carbon, 1.2kΩ, 1/4W, ± 5%	1	
R321	**ERD14FJ122**	Carbon, 1.2kΩ, 1/4W, ± 5%	1	
R322	**ERD14FJ122**	Carbon, 1.2kΩ, 1/4W, ± 5%	1	
R323	**ERD25TJ562**	Carbon, 5.6kΩ, 1/4W, ± 5%	1	
R324	**ERD25TJ562**	Carbon, 5.6kΩ, 1/4W, ± 5%	1	
R325	**ERD25TJ103**	Carbon, 10kΩ, 1/4W, ± 5%	1	
R326	**ERD25TJ103**	Carbon, 10kΩ, 1/4W, ± 5%	1	
R327	**ERD25TJ123**	Carbon, 12kΩ, 1/4W, ± 5%	1	
R328	**ERD25TJ123**	Carbon, 12kΩ, 1/4W, ± 5%	1	
R329	**ERD14FJ471**	Carbon, 470Ω, 1/4W, ± 5%	1	
R330	**ERD14FJ471**	Carbon, 470Ω, 1/4W, ± 5%	1	
R331	**ERD25TJ471**	Carbon, 470Ω 1/4W, ± 5%	1	
R332	**ERD25TJ471**	Carbon, 470Ω 1/4W, ± 5%	1	
R333	**ERD14FJ152**	Carbon, 1.5kΩ, 1/4W, ± 5%	1	
R334	**ERD14FJ152**	Carbon, 1.5kΩ, 1/4W, ± 5%	1	
R335	**ERD14FJ681**	Carbon, 680Ω, 1/4W, ± 5%	1	
R336	**ERD14FJ681**	Carbon, 680Ω, 1/4W, ± 5%	1	
R337	**ERG2ANJ472**	Metal Film, 4.7kΩ, 2W, ± 5%	1	
R338	**ERG2ANJ472**	Metal Film, 4.7kΩ, 2W, ± 5%	1	
R339	**ERD14FJ331**	Carbon, 330Ω, 1/4W, ± 5%	1	
R340	**ERD14FJ331**	Carbon, 330Ω, 1/4W, ± 5%	1	
R341	**ERD14FJ331**	Carbon, 330Ω, 1/4W, ± 5%	1	
R342	**ERD14FJ331**	Carbon, 330Ω, 1/4W, ± 5%	1	
R343	**ERD14FJ221**	Carbon, 220Ω, 1/4W, ± 5%	1	
R344	**ERD14FJ221**	Carbon, 220Ω, 1/4W, ± 5%	1	
R345	ERF5AKR33	Non-Flammable, 0.33Ω, 5W, ±10%	1	
R346	ERF5AKR33	Non-Flammable, 0.33Ω, 5W, ±10%	1	

Downloaded from www.Manualslib.com manuals search engine

. No.	Part No.	Part Name & Description	Per Set	Remarks
	ERF5AKR33	Non-Flammable, 0.33Ω, 5W, ±10%	1	
	ERF5AKR33	Non-Flammable, 0.33Ω, 5W, ±10%	1	
	ERD25TJ563	Carbon, 56kΩ, 1/4W, ± 5%	1	
	ERD25TJ563	Carbon, 56kΩ, 1/4W, ± 5%	1	
	ERO25CKF8202	Metal Film, 82kΩ, 1/4W, ± 1%	1	
	ERO25CKF8202	Metal Film, 82kΩ, 1/4W, ± 1%	1	
	ERO25CKF6800	Metal Film, 680Ω, 1/4W, ± 1%	1	
	ERO25CKF6800	Metal Film, 680Ω, 1/4W, ± 1%	1	
	ERD25TJ223	Carbon, 22kΩ, 1/4W, ± 5%	1	
	ERD25TJ223	Carbon, 22kΩ, 1/4W, ± 5%	1	
	ERO25CKF3301	Metal Film, 3.3kΩ, 1/4W, ± 1%	1	
	ERO25CKF3301	Metal Film, 3.3kΩ, 1/4W, ± 1%	1	
	ERX2ANJ100	Metal Film, 10Ω, 2W, ± 5%	1	
	ERX2ANJ100	Metal Film, 10Ω, 2W, ± 5%	1	
	ERG2ANJ331	Metal Film, 330Ω, 2W, ± 5%	1	
	ERG2ANJ331	Metal Film, 330Ω, 2W, ± 5%	1	
	ERX1ANJ6R8	Metal Film, 6.8Ω, 1W, ± 5%	1	
	ERX1ANJ6R8	Metal Film, 6.8Ω, 1W, ± 5%	1	
	ERD14FJ101	Carbon, 100Ω, 1/4W, ± 5%	1	
	ERD14FJ101	Carbon, 100Ω, 1/4W, ± 5%	1	
	ERD14FJ181	Carbon, 180Ω, 1/4W, ± 5%	1	
	ERD14FJ181	Carbon, 180Ω, 1/4W, ± 5%	1	
	ERD25TJ103	Carbon, 10kΩ, 1/4W, ± 5%	1	
X2)	**ERD18FJ331**	Carbon, 330Ω, 1/8W, ± 5%	2	
X2)	**ERD18FJ331**	Carbon, 330Ω, 1/8W, ± 5%	2	
X2)	**ERD25TJ102**	Carbon, 1kΩ, 1/4W, ± 5%	2	
X2)	**ERD25TJ102**	Carbon, 1kΩ, 1/4W, ± 5%	2	
X2)	**ERD25TJ183**	Carbon, 18kΩ, 1/4W, ± 5%	2	
X2)	**ERD25TJ822**	Carbon, 8.2kΩ, 1/4W, ± 5%	2	
X2)	**ERD25TJ103**	Carbon, 10kΩ, 1/4W, ± 5%	2	
	ERD25TJ273	Carbon, 27kΩ, 1/4W, ± 5%	1	
	ERD25TJ223	Carbon, 22kΩ, 1/4W, ± 5%	1	
	ERD25TJ333	Carbon, 33kΩ, 1/4W, ± 5%	1	
	ERD25TJ154	Carbon, 150kΩ, 1/4W, ± 5%	1	
	ERD25TJ153	Carbon, 15kΩ, 1/4W, ± 5%	1	
	ERD25TJ223	Carbon, 22kΩ, 1/4W, ± 5%	1	
	ERD25TJ223	Carbon, 22kΩ, 1/4W, ± 5%	1	
	ERD25TJ223	Carbon, 22kΩ, 1/4W, ± 5%	1	
	ERD25TJ183	Carbon, 18kΩ, 1/4W, ± 5%	1	
	ERD25TJ393	Carbon, 39kΩ, 1/4W, ± 5%	1	
	ERD25TJ824	Carbon, 820kΩ, 1/4W, ± 5%	1	
	ERD25TJ103	Carbon, 10kΩ, 1/4W, ± 5%	1	
	ERD25TJ681	Carbon, 680Ω, 1/4W, ± 5%	1	
	ERG1ANJ681	Metal Film, 680Ω, 1W, ± 5%	1	
	ERQ12HJ5R6	Fuse Type Metallic, 5.6Ω, 1/2W, ± 5%	1	
	ERD18FJ4R7	Carbon, 4.7Ω, 1/8W, ± 5%	1	
	ERD12FJ392	Carbon, 3.9kΩ, 1/2W, ± 5%	1	
	ERD12FJ392	Carbon, 3.9kΩ, 1/2W, ± 5%	1	
	ERG1ANJ680	Metal Film, 68Ω, 1W, ± 5%	1	
	ERG1ANJ391	Metal Film, 390Ω, 1W, ± 5%	1	
	ERG1ANJ391	Metal Film, 390Ω, 1W, ± 5%	1	
	ERD25TJ223	Carbon, 22kΩ, 1/4W, ± 5%	1	

Ref. No.	Part No.	Part Name & Description	Per Set	Remarks
R509	**ERD25TJ223**	Carbon, 22kΩ, 1/4W, ± 5%	1	
R510	**ERD25TJ223**	Carbon, 22kΩ, 1/4W, ± 5%	1	
R511	**ERD25TJ223**	Carbon, 22kΩ, 1/4W, ± 5%	1	
R512	**ERD25TJ273**	Carbon, 27kΩ, 1/4W, ± 5%	1	
R513	**ERD25TJ393**	Carbon, 39kΩ, 1/4W, ± 5%	1	
R514	**ERD25TJ472**	Carbon, 4.7kΩ, 1/4W, ± 5%	1	
R515	ERO25CKF2152	Metal Film, 21.5kΩ, 1/4W, ± 1%	1	
R516	ERO25CKF2152	Metal Film, 21.5kΩ, 1/4W, ± 1%	1	
		VARIABLE RESISTORS		
VR201	EWKE6A029252	Balance Control, 250kΩ(BH)	1	○
VR202	EWF77A031BF5	Volume Control, 250kΩ(B)	1	○
VR203	EWF4XA063C15	Bass Control, 100kΩ(C)	1	○
VR204	EWF3XA063C15	Treble Control, 100kΩ(C)	1	○
VR301, 302, 303 304	EVTS3MA00B54	DC Balance Adjustment, 50kΩ(B)	4	
VR305, 306	**EVLS3AA00B52**	ICQ Adjustment, 500Ω(B)	2	
R350(X2), 351(X2)	**EVLS0AA00B53**	Power Limiter Adjustment, 5kΩ(B)	4	
VR501	**EVLS3AA00B53**	Voltage Control Adjustment, 5kΩ(B)	1	
		CAPACITORS		
C1 [M]	ECQU1A103MD	Polyester, 0.01μF, 125V.AC.±20%	1	
C1 [MC]	ECQU1A103MC	Polyester, 0.01μF, 125V.AC.±20%	1	
C2 [M]	ECQU1A103MD	Polyester, 0.01μF, 125V.AC.±20%	1	
C2 [MC]	ECQU1A103MC	Polyester, 0.01μF, 125V.AC.±20%	1	
C101	ECKD1H331KB	Ceramic, 330pF, 50V, ±10%	1	
C102	ECKD1H331KB	Ceramic, 330pF, 50V, ±10%	1	
C103	ECQE1335KZ	Polyester, 3.3μF, 125V, ±10%	1	
C104	ECQE1335KZ	Polyester, 3.3μF, 125V, ±10%	1	
C105	ECCD1H121K	Ceramic, 120pF, 50V, ±10%	1	
C106	ECCD1H121K	Ceramic, 120pF, 50V, ±10%	1	
C107	ECCD1H681KB	Ceramic, 680pF, 50V, ±10%	1	
C108	ECCD1H681KB	Ceramic, 680pF, 50V, ±10%	1	
C109	**ECEA10V1000V**	Electrolytic, 1000μF, 10V	1	
C110	**ECEA10V1000V**	Electrolytic, 1000μF, 10V	1	
C111	**ECEA6V220V**	Electrolytic, 220μF, 6.3V	1	
C112	**ECEA6V220V**	Electrolytic, 220μF, 6.3V	1	
C113	ECEA16V10	Electrolytic, 10μF, 16V	1	
C114	ECEA16V10	Electrolytic, 10μF, 16V	1	
C115	ECQF05154GZN	Polypropylene, 0.15μF, 50V, ± 2%	1	
C116	ECQF05154GZN	Polypropylene, 0.15μF, 50V, ± 2%	1	
C117	ECQF1393GZN	Polypropylene, 0.039μF, 125V, ± 2%	1	
C118	ECQF1393GZN	Polypropylene, 0.039μF, 125V, ± 2%	1	
C119	ECQM1H332JZ	Polyester, 0.0033μF, 50V, ± 5%	1	
C120	ECQM1H332JZ	Polyester, 0.0033μF, 50V, ±5%	1	
C121	ECCD1H820K	Ceramic, 82pF, 50V, ±10%	1	
C122	ECCD1H820K	Ceramic, 82pF, 50V, ±10%	1	
C123	ECCD1H270K	Ceramic, 27pF, 50V, ±10%	1	
C124	ECCD1H270K	Ceramic, 27pF, 50V, ±10%	1	
C125	ECEA6V47	Electrolytic, 47μF, 6.3V	1	

Downloaded from www.Manualslib.com manuals search engine

R503	ERD12FJ392	Carbon,	3.9kΩ,	1/2W,	± 5%
R504	ERD12FJ392	Carbon,	3.9kΩ,	1/2W,	± 5%
R505	**ERG1ANJ680**	Metal Film,	68Ω,	1W,	± 5%
R506	**ERG1ANJ391**	Metal Film,	390Ω,	1W,	± 5%
R507	**ERG1ANJ391**	Metal Film,	390Ω,	1W,	± 5%
R508	**ERD25TJ223**	Carbon,	22kΩ,	1/4W,	± 5%

C121	ECCD1H820K	Ceramic,	82pF,	50V,	±10%
C122	ECCD1H820K	Ceramic,	82pF,	50V,	±10%
C123	ECCD1H270K	Ceramic,	27pF,	50V,	±10%
C124	ECCD1H270K	Ceramic,	27pF,	50V,	±10%
C125	ECEA6V47	Electrolytic,	47μF,	6.3V	

Ref. No.	Part No.	Part Name & Description				Per Set	Remarks
C126	ECEA6V47	Electrolytic,	47μF,	6.3V		1	
C127	**ECEA63V33V**	Electrolytic,	33μF,	63V		1	
C128	**ECEA63V33V**	Electrolytic,	33μF,	63V		1	
C129	**ECEA63V33V**	Electrolytic,	33μF,	63V		1	
C130	**ECEA63V33V**	Electrolytic,	33μF,	63V		1	
C131	ECQMIH152JZ	Polyester,	0.0015μF,	50V,	± 5%	1	
C132	ECQMIH152JZ	Polyester,	0.0015μF,	50V,	± 5%	1	
C133	ECQE1105KZ	Polyester,	1μF,	125V,	±10%	1	
C134	ECQE1105KZ	Polyester,	1μF,	125V,	±10%	1	
C135	ECEA50V10	Electrolytic,	10μF,	50V		1	
C136	ECEA50V10	Electrolytic,	10μF,	50V		1	
C137	**ECEA50V47V**	Electrolytic,	47μF,	50V		1	
C138	ECEA6V33	Electrolytic,	33μF,	6.3V		1	
C201	ECQM1H103KZ	Polyester,	0.01μF,	50V,	±10%	1	
C202	ECQM1H103KZ	Polyester,	0.01μF,	50V,	±10%	1	
C203	ECCD1H221K	Ceramic,	220pF,	50V,	±10%	1	
C204	ECCD1H221K	Ceramic,	220pF,	50V,	±10%	1	
C205	ECQE1684KZ	Polyester,	0.68μF,	125V,	±10%	1	
C206	ECQE1684KZ	Polyester,	0.68μF,	125V,	±10%	1	
C207	ECEA50VR47	Electrolytic,	0.47μF,	50V		1	
C208	ECEA50VR47	Electrolytic,	0.47μF,	50V		1	
C209	ECCD1H120K	Ceramic,	12pF,	50V,	±10%	1	
C210	ECCD1H120K	Ceramic,	12pF,	50V,	±10%	1	
C211	ECQM1H152KZ	Polyester,	0.0015μF,	50V,	±10%	1	
C212	ECQM1H152KZ	Polyester,	0.0015μF,	50V,	±10%	1	
C213	ECQM1H822KZ	Polyester,	0.0082μF,	50V,	±10%	1	
C214	ECQM1H822KZ	Polyester,	0.0082μF,	50V,	± 5%	1	
C215	**ECEA16N10**	Non-Polar Electrolytic,	10μF,	16V		1	
C216	**ECEA16N10**	Non-Polar Electrolytic,	10μF,	16V		1	
C217	ECQM1H103KZ	Polyester,	0.01μF,	50V,	±10%	1	
C218	ECQM1H103KZ	Polyester,	0.01μF,	50V,	±10%	1	
C219	ECQM1H333KZ	Polyester,	0.033μF,	50V,	±10%	1	
C220	ECQM1H333KZ	Polyester,	0.033μF,	50V,	±10%	1	
C221	**ECEA50N1**	Non-Polar Electrolytic,	1μF,	50V		1	
C222	**ECEA50N1**	Non-Polar Electrolytic,	1μF,	50V		1	
C223	ECQM1H182KZ	Polyester,	0.0018μF,	50V,	±10%	1	
C224	ECQM1H182KZ	Polyester,	0.0018μF,	50V,	±10%	1	
C225	ECEA50V1	Electroytic,	1μF,	50V		1	
C226	ECEA50V1	Electrolytic,	1μF,	50V		1	
C227	ECEA6V33	Electrolytic,	33μF,	6.3V		1	
C301	**ECEA50N1**	Non-Polar Electrolytic,	1μF,	50V		1	
C302	**ECEA50N1**	Non-Polar Electrolytic,	1μF,	50V		1	
C303	ECCD2H121K	Ceramic,	120pF,	500V,	±10%	1	
C304	ECCD2H121K	Ceramic,	120pF,	500V,	±10%	1	
C305	ECEA25V3R3	Electrolytic,	3.3μF,	25V		1	
C306	ECEA25V3R3	Electrolytic,	3.3μF,	25V		1	
C307	ECCD2H121K	Ceramic,	120pF	500V,	±10%	1	
C308	ECCD2H121K	Ceramic,	120pF,	500V,	±10%	1	
C309	ECCD2H680K	Ceramic,	68pF,	500V,	±10%	1	
C310	ECCD2H680K	Ceramic,	68pF,	500V,	±10%	1	
C311	ECKD1H103PF	Ceramic,	0.01μF,	50V,	$^{+100\%}_{-0}$	1	
C312	ECKD1H103PF	Ceramic,	0.01μF,	50V,	$^{+100\%}_{-0}$	1	
C313	ECCD2H390K	Ceramic,	39pF,	500V,	±10%	1	
C314	ECCD2H390K	Ceramic,	39pF,	500V,	±10%	1	
C315	ECKD1H472PF	Ceramic,	0.0047μF,	50V,	$^{+100\%}_{-0}$	1	
C316	ECKD1H472PF	Ceramic,	0.0047μF,	50V,	$^{+100\%}_{-0}$	1	

Ref. No.	Part No.	Part Name & Description				Per Set	Remarks
C317	ECCD1H271K	Ceramic,	270pF,	50V,	±10%	1	
C318	ECCD1H271K	Ceramic,	270pF,	50V,	±10%	1	
C319	ECKD1H331K	Ceramic,	330pF,	50V,	±10%	1	
C320	ECKD1H331K	Ceramic,	330pF	50V,	±10%	1	
C323	ECEA50MR22	Electrolytic,	0.22μF,	50V		1	
C324	ECEA50MR22	Electrolytic,	0.22μF,	50V		1	
C325	**ECEA10V1000V**	Electrolytic,	1000μF,	10V		1	
C326	**ECEA10V1000V**	Electrolytic,	1000μF,	10V		1	
C327	ECCD1H150K	Ceramic,	15pF,	50V,	±10%	1	
C328	ECCD1H150K	Ceramic,	15pF,	50V,	±10%	1	
C329	ECQM1473KZ	Polyester,	0.047μF,	125V,	±10%	1	
C330	ECQM1473KZ	Polyester,	0.047μF,	125V,	±10%	1	
C331	ECEA50V3R3	Electrolytic,	3.3μF,	50V		1	
C332	ECEA50V3R3	Electrolytic,	3.3μF,	50V		1	
C333	ECEA50V3R3	Electrolytic,	3.3μF,	50V		1	
C336	ECEA6V47	Electrolytic	47μF,	6.3V		1	
C350 (X2)	ECKD1H222PF	Ceramic,	0.0022μF,	50V,	$^{+100\%}_{-0}$	2	
C351 (X2)	ECKD1H222PF	Ceramic,	0.0022μF,	50V,	$^{+100\%}_{-0}$	2	
C401	ECEA50V1	Electrolytic,	1μF,	50V		1	
C402	**ECEA16N47**	Non-Polar Electrolytic,	47μF,	16V		1	
C403	ECEA6V100V	Electrolytic,	100μF,	6.3V		1	
C501	ECET55R103Y	Electrolytic,	10000μF,	55V		1	
C502	ECET55R103Y	Electrolytic,	10000μF,	55V		1	
C503	ECET55R103Y	Electrolytic,	10000μF,	55V		1	
C504	ECET55R103Y	Electrolytic,	10000μF,	55V		1	
C505	ECEA63V470V	Electrolytic,	470μF,	63V		1	
C506	ECEA63V470V	Electrolytic,	470μF,	63V		1	
C507	ECKD2H681KB	Ceramic,	680pF,	500V,	±10%	1	
C509	ECEA63V3R3	Electrolytic,	3.3μF,	63V		1	
C510	ECEA63V3R3	Electrolytic,	3.3μF,	63V		1	
C511	ECKD1H102PF	Ceramic,	0.001μF,	50V,	$^{+100\%}_{-0}$	1	
C512	ECKD1H472PF	Ceramic,	0.0047μF,	50V,	$^{+100\%}_{-0}$	1	
C513	ECEA50V1	Electrolytic,	1μF,	50V		1	
C515	ECEA50V1	Electrolytic,	1μF,	50V		1	
C516	ECEA50V1	Electrolytic,	1μF,	50V		1	
C517	ECEA50V1	Electrolytic,	1μF,	50V		1	
C518	ECEA50V1	Electrolytic,	1μF,	50V		1	

PILOT LAMP

PL	XAMR21S350C	Power indicator, 6.3V 40mA	1	

FUSES

F1, 2	XBA1F30NU100	Fuse, 3A (125V), Power Source	2	
F3, 4	XBA2F05NU100	Fuse, 0.5 A (250V), Power Source	2	

SWITCHES

S1	SSR65	Switch, Selector	1	○
S2, 3	SSR49	Switch, Tape Monitor & Rec Mode	2	
S4, 5, 14	SSH333S	Switch, Capacitance, Resistance & Loudness	1	○
S6, 7, 8, 9	SSH411S	Switch, EQ Subsonic, Mode, Muting & High Filter	1	○

Downloaded from www.Manualslib.com manuals search engine

■ EXPLODED VIEWS

Bottom parts of front panel

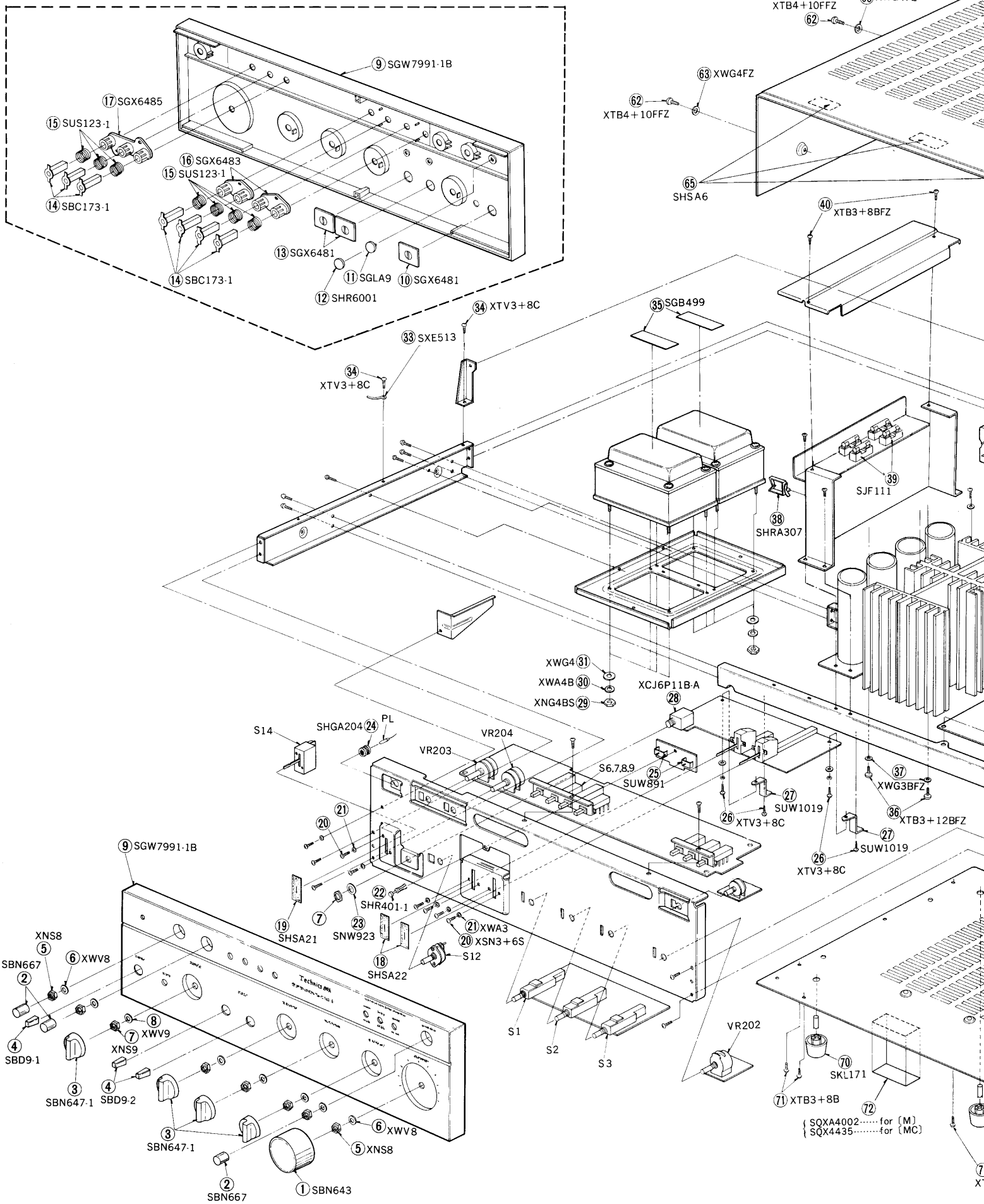

Downloaded from www.Manualslib.com manuals search engine

■ ACCESSORY

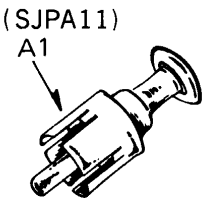

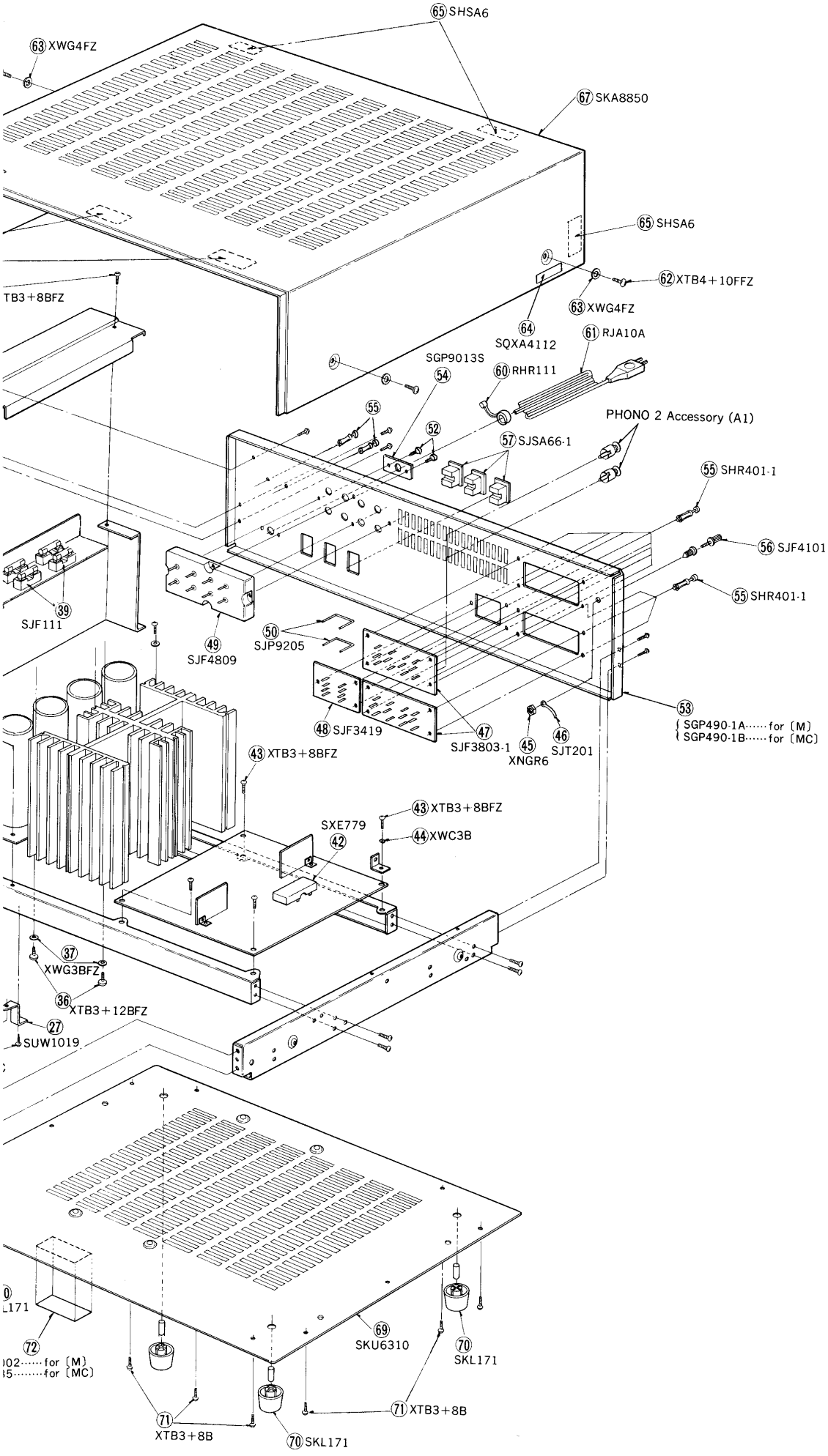

Downloaded from www.Manualslib.com manuals search engine

f. No.	Part No.	Part Name & Description	Par Set	Remarks
	SSL33S	Switch, Direct	1	○
	SSL31S	Switch, Operation	1	○
	ESRC124F25B	Switch, Speaker	1	
	SSL45S	Switch, Power Source	1	○
		RELAY		
AY	SSY21	Relay, Speakers Protection & Muting	1	
		COMPONENT COMBINATIONS		
1, 502, 503	RXAF103P22HD	Component Combination, 0.01μF, (X2)	3	
		CABINET and CHASSIS PARTS		
	SBN643	Knob, Volume Control	1	○
	SBN667	Knob, Bass, Treble & Balance Control	3	○
	SBN647-1	Knob, Speakers, Rec Mode, Tape Monitor & Selector	4	○
	SBD9-2	Knob, Power Switch, Operation & Input	3	○
	XNS8	Nut, Volume, Bass, Treble, Balance Volume & Selector	7	
	XWV8	Washer (Spring)	7	
	XNS9	Nut, Headphones & Speaker Switch	2	
	XWV9	Washer (Spring), Speaker Switch	1	
	SGW7991-1B	Panel, Front	1	○
	SGX6481	Sleeve, Push Switch Button	1	○
	SGLA9	Panel Light, Orange	1	*
	SHR6001	Shading Cloth, Panel Light	1	○
	SGX6481	Sleeve, Push Switch Buttons	2	○
	SBC173-1	Button, Push Switch	7	○
	SUS123-1	Spring, Push Switch Button	7	○
	SGX6483	Sleeve, Push Switch Buttons	2	○
	SGX6485	Sleeve, Push Switch Buttons	1	○
	SHSA22	Shading Cloth	2	
	SHSA21	Shading Cloth	1	
	XSN3+6S	Screw, Power Source & Push Switch M'tg	6	
	XWA3	Washer (Spring), Power Source & Push Switch Screw	6	
	SHR401-1	Latch, LED Bracket	1	
	SNW923	Washer, Headphones Jack	1	
	SHGA204	Bracket, Lamp	1	
	SUW891	Bracket, LED	2	*
	XTV3+8C	Screw, Printed Circuit Board Ass'y M'tg	4	
	SUW1019	Bracket, Printed Circuit Board Ass'y	2	* ○
	XCJ6P11B-A	Jack, Headphones	1	
	XNG4BS	Nut, Power Transformer	8	
	XWA4B	Washer (Spring), Power Transformer	8	
	XWG4	Washer, Power Transformer	8	
	SXE513	Lead Clamp	1	
	XTV3+8C	Screw, Lead Clamp M'tg	2	
	SGB499	Label, Technics	2	* ○

Ref. No.	Part No.	Part Name & Description	Per Set	Remarks
36	XTB3+12BFZ	Screw, Heat Sink M'tg	2	
37	XWG3BFZ	Washer, Heat Sink Screw	2	
38	SHRA307	Lead Clamp	1	
39	SJF111	Holder, Fuse	4	
40	XTB3+8BFZ	Screw, Fuse Cover Bracket M'tg	2	
42	SXE779	Shield Case	1	○
43	XTB3+8BFZ	Screw, Printed Circuit Board Ass'y M'tg	2	
44	XWC3B	Washer, Printed Circuit Board Ass'y	1	
45	XNGR6	Nut, Ground Terminal	1	
46	SJT201	Lug, Ground	1	
47	SJF3803-1	Terminal, Input	2	
48	SJF3419	Terminal, Pre Out & Main In	1	
49	SJF4809	Terminal Board, Speaker	1	○
50	SJP9205	Short Pin, Pre & Main Amplifier	2	
52	XSB3+8FZS	Screw, AC Cord Bracket M'tg	2	
53 [M]	SGP490-1A	Rear Panel	1	○
53 [MC]	SGP490-1B	Rear Panel,	1	○
54	SGP9013S	Bracket, AC Cord	1	
55	SHR401-1	Latch, Input, Antenna & Speaker Terminals	17	
56	SJF4101	Terminal, Ground	1	
57	SJSA66-1	Socket, AC Outlet	3	
60	RHR111	Bushing, AC Cord	1	
61	**RJA10A**	AC Cord, Power Source	1	
62	XTB4+10FFZ	Screw, Cabinet M'tg	4	
63	XWG4FZ	Washer, Cabinet Screw	4	
64	SQXA4112	Coution Label, Cabinet Screw	1	
65	SHSA6	Shading Cloth	6	
67	SKA8850	Cabinet, Black Wooden	1	○
69	SKU6310	Bottom Board	1	* ○
70	SKL171	Foot, Set	4	
71	XTB3+8B	Screw, Bottom Board M'tg	10	
72 [M]	SQXA4002	Caution Label, Bottom Board	1	
72 [MC]	SQX4435	Caution Label, Bottom Board	1	
		ACCESSORIES		
A1	SJPA11	Short Pin, Phono 2 input terminal	2	
		PACKING PARTS		
P1	SPP511	Soft Cover	1	
P2	SPS801-1	Pad, Left Side	1	
P3	SPS803-1	Pad, Right Side	1	
P4	SPS1013	Pad, Bottom Side	1	○
P5 [M]	SPG1053	Carton Box	1	○
P5 [MC]	SPG1055	Carton Box	1	○
P6 [M]	SQF1579	Instructions Book, Printed Matter	1	○
P6 [MC]	SQF1581	Instructions Book, Printed Matter	1	○

Notes:
The model [M] is available in America only.
The model [MC] is available in Canada only.

Downloaded from www.Manualslib.com manuals search engine

■ PACKINGS

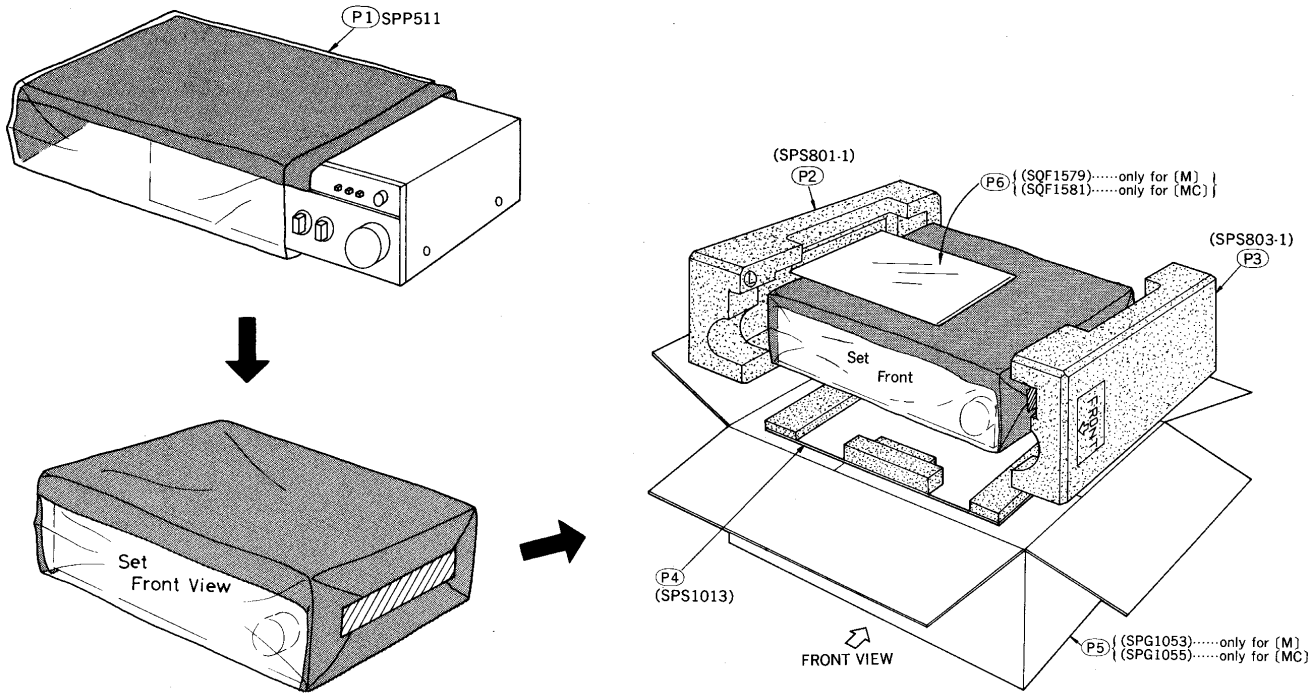

Printed in Japan
7706-3350A

Downloaded from www.Manualslib.com manuals search engine