正本
ORIGINAL

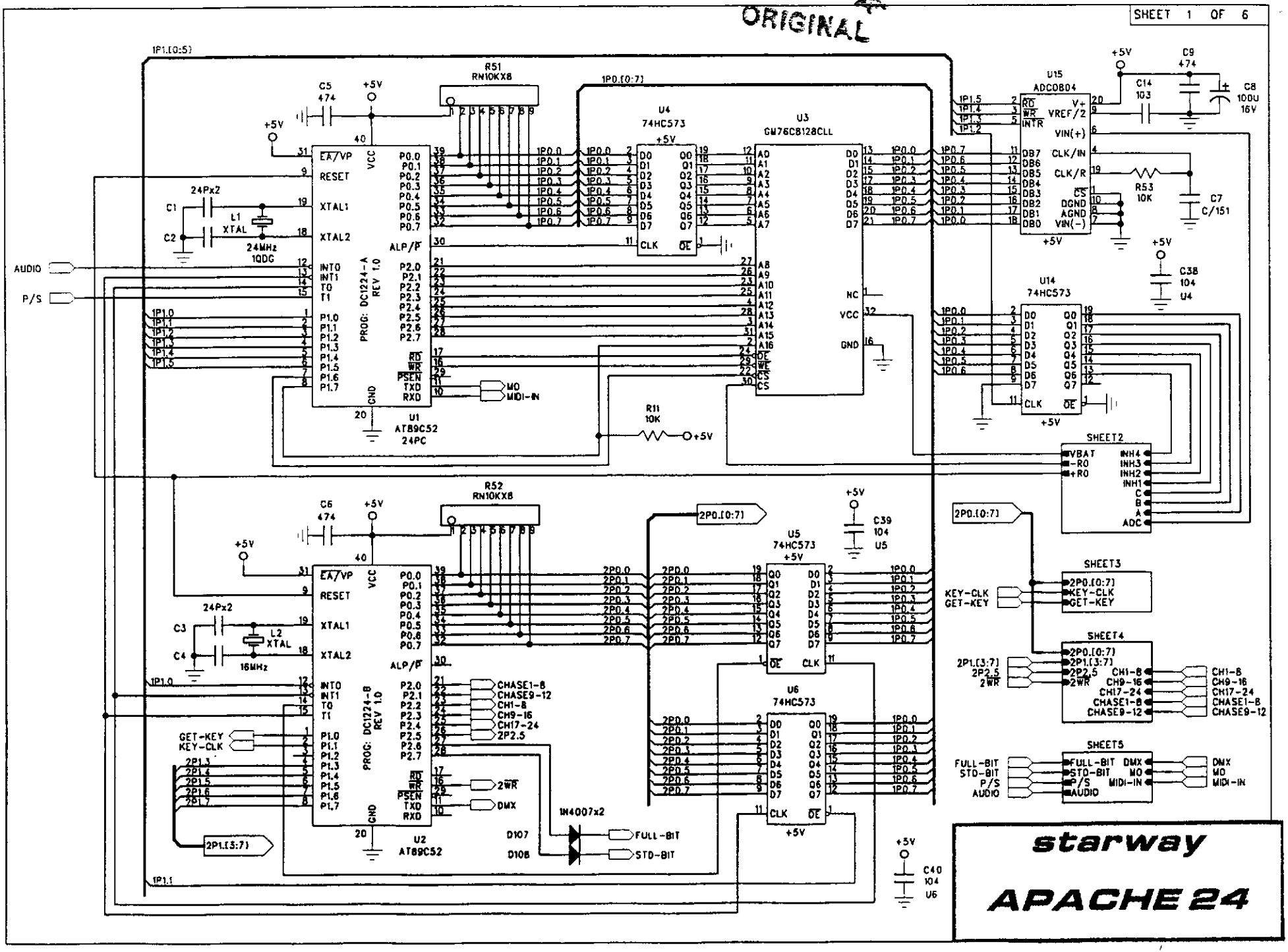
SHEET 1 OF 6
1P1.[0:5]
R51
RN10KX8
C5
474
+5V
1P0.[0:7]
U4
74HC573
U3
GM76C8128CLL
U15
ADC0804
C9
474
C14
103
C8
100U
16V
R53
10K
C7
C/151
C38
104
U4
U14
74HC573
24Px2
C1
C2
L1
XTAL
24MHz
1QDG
AUDIO
P/S
PROG: DC1224-A
REV 1.0
U1
AT89C52
24PC
MO
MIDI-IN
R11
10K
SHEET2
VBAT
-RO
+RO
INH4
INH3
INH2
INH1
C
B
A
ADC
R52
RN10KX8
C6
474
2P0.[0:7]
U5
74HC573
C39
104
U5
SHEET3
KEY-CLK
GET-KEY
SHEET4
2P1.[3:7]
2P2.5
2WR
CH1-8
CH9-16
CH17-24
CHASE1-8
CHASE9-12
C3
C4
L2
XTAL
16MHz
PROG: DC1224-B
REV 1.0
U2
AT89C52
CHASE1-8
CHASE9-12
CH1-8
CH9-16
CH17-24
2P2.5
GET-KEY
KEY-CLK
2WR
DMX
1N4007x2
D107
D108
FULL-BIT
STD-BIT
U6
74HC573
SHEET5
FULL-BIT
STD-BIT
P/S
AUDIO
DMX
MO
MIDI-IN
C40
104
U6
starway
APACHE 24

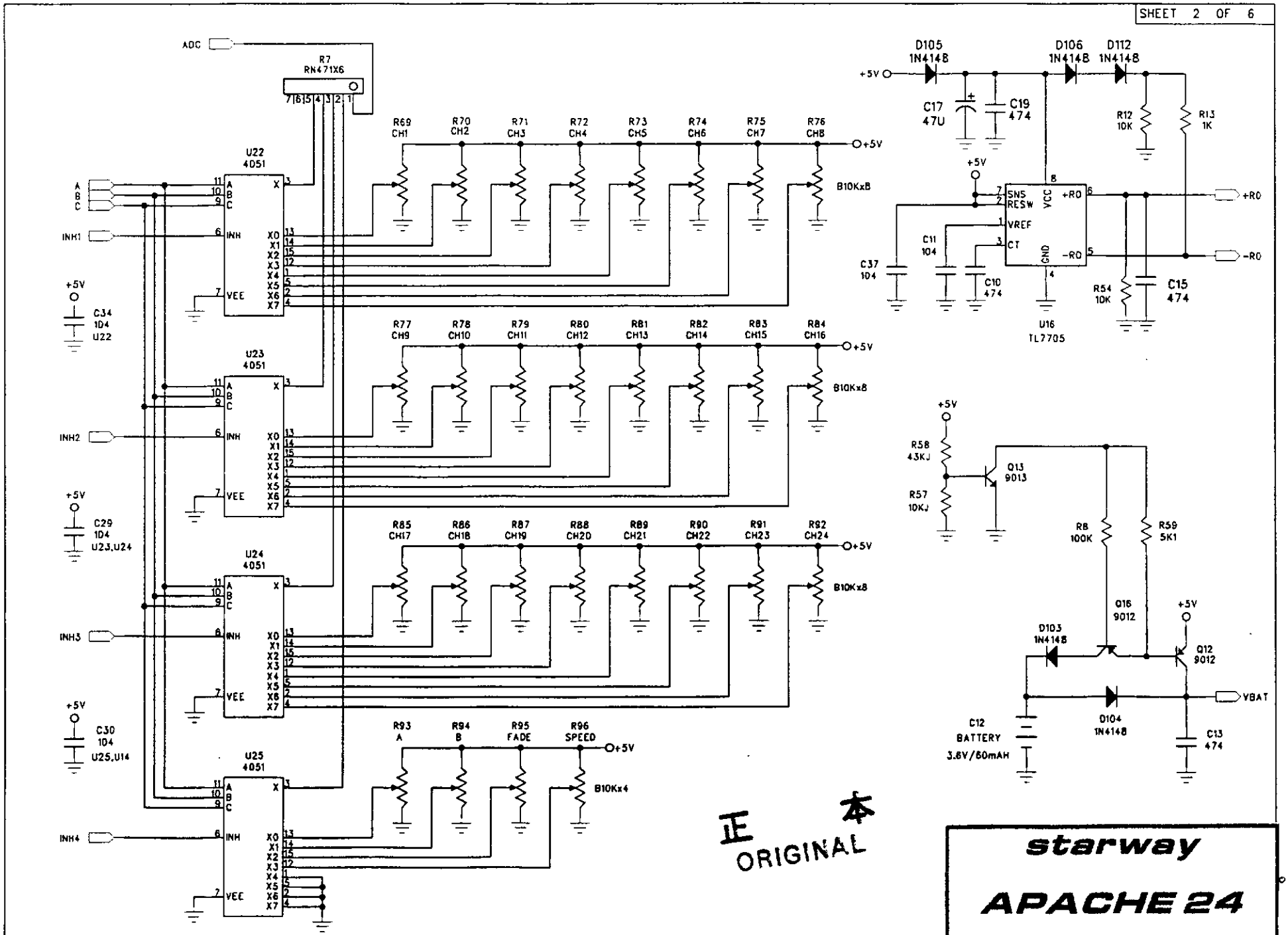

正 本
ORIGINAL

starway

APACHE 24

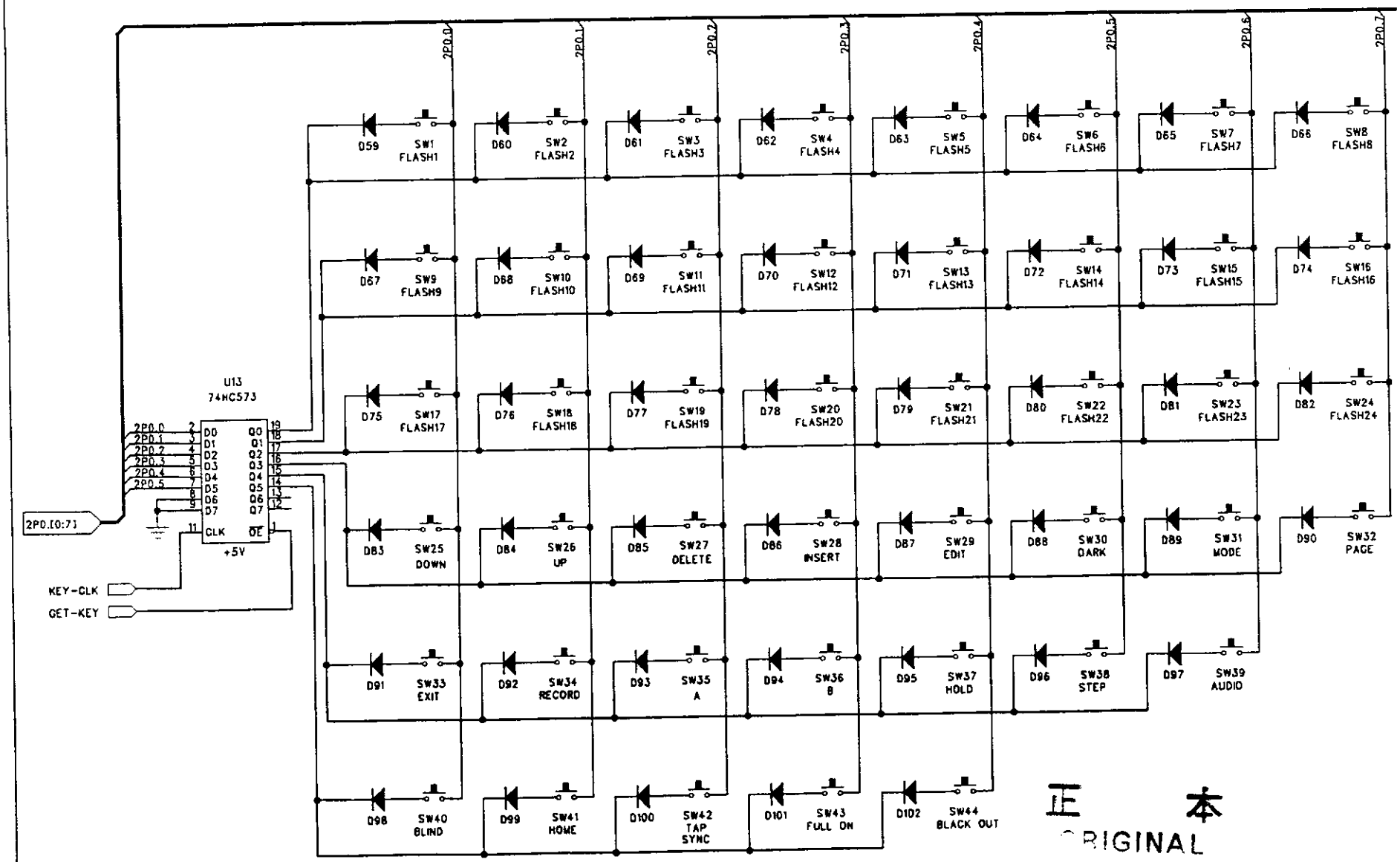

正 本

ORIGINAL

starway

APACHE 24

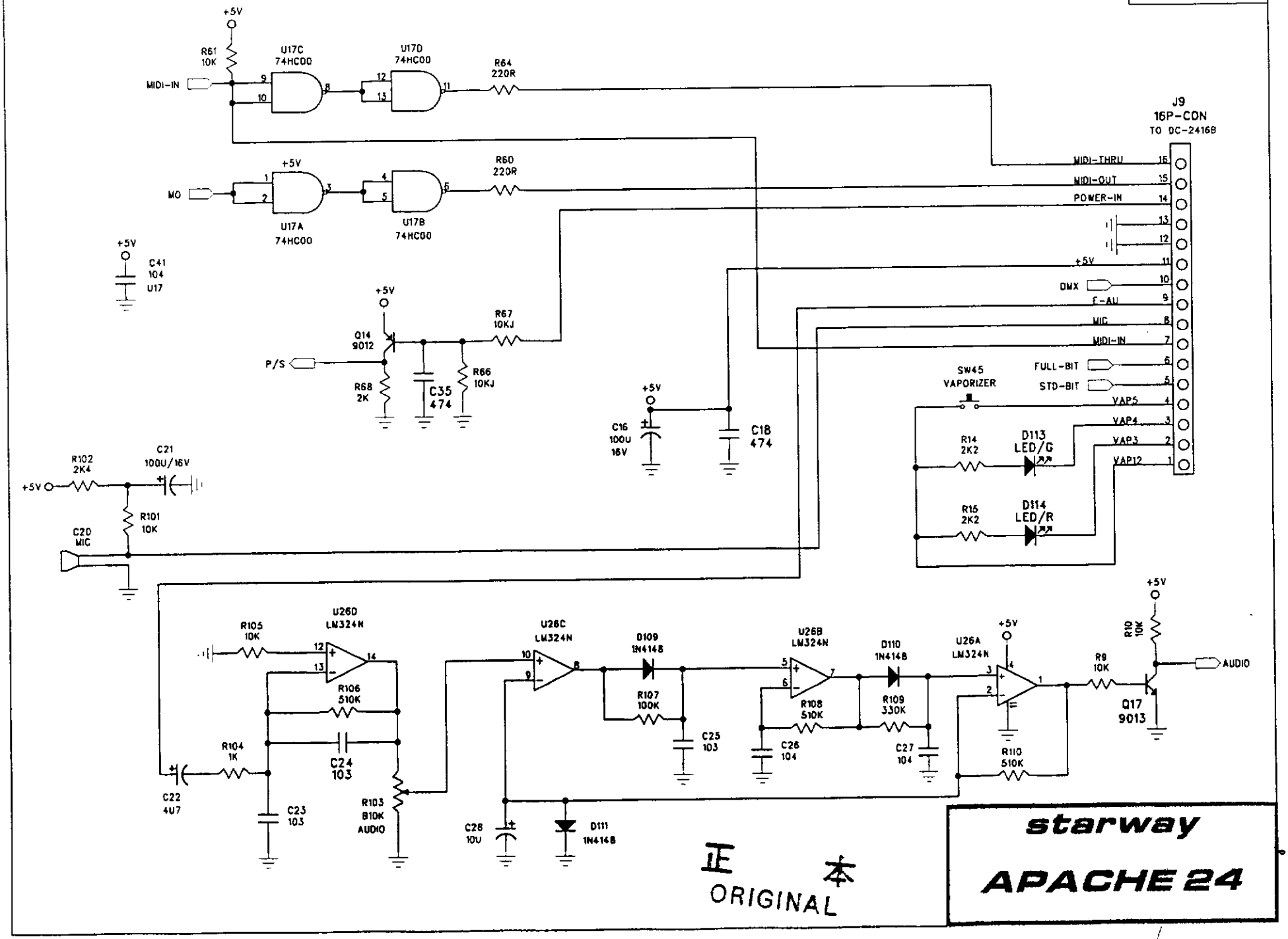

正 本
ORIGINAL

starway

APACHE 24

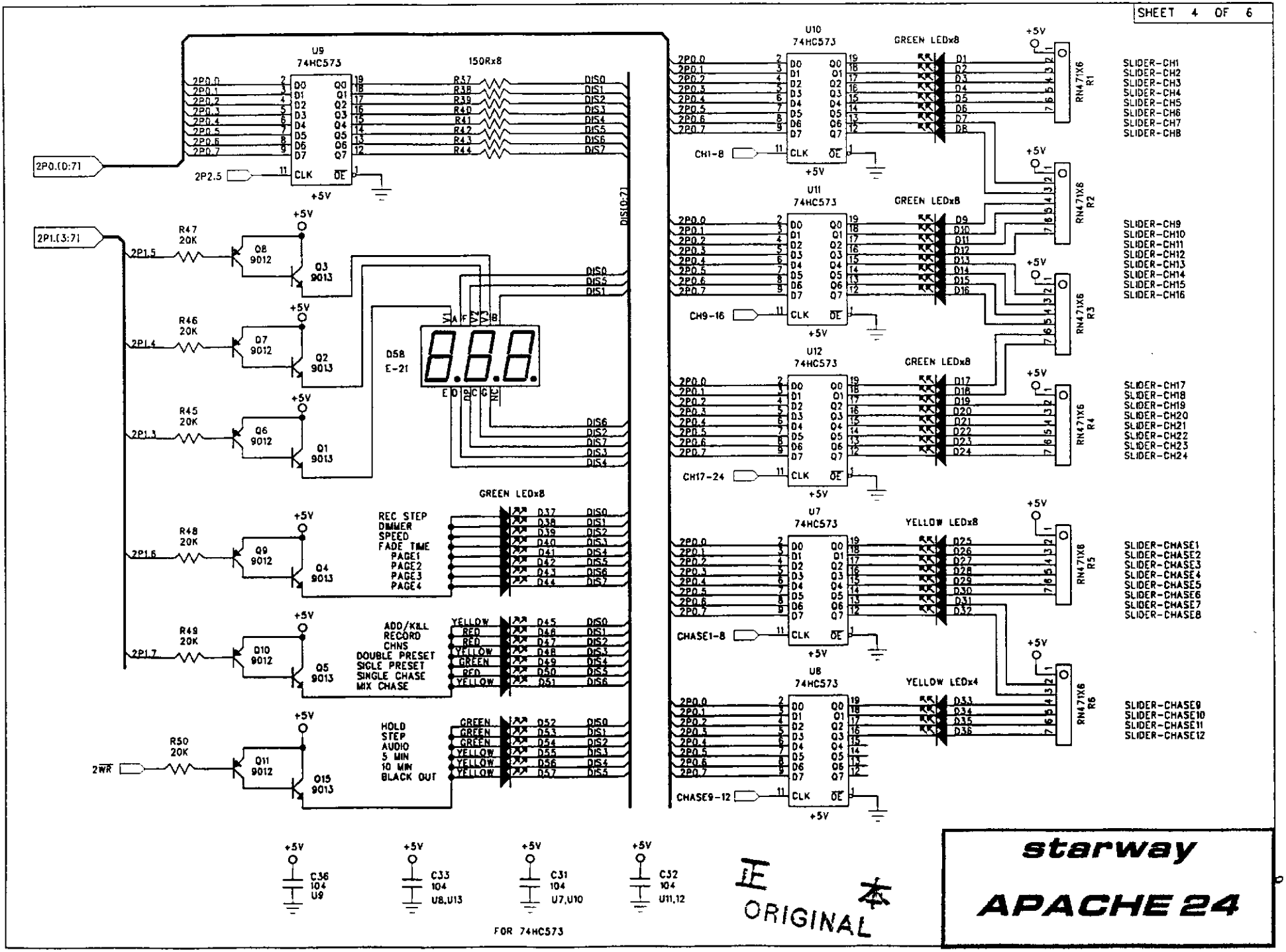
U9
74HC573
150Rx8
2P0.(0:7)
2P2.5
CLK
OE
+5V
DIS(0:7)
2P1.(3:7)
R47 20K
R46 20K
R45 20K
R48 20K
R49 20K
R50 20K
2WR
Q8 9012
Q7 9012
Q6 9012
Q9 9012
Q10 9012
Q11 9012
Q3 9013
Q2 9013
Q1 9013
Q4 9013
Q5 9013
Q15 9013
DS8
E-21
GREEN LEDx8
REC STEP
DIMMER
SPEED
FADE TIME
PAGE1
PAGE2
PAGE3
PAGE4
ADD/KILL
RECORD
CHNS
DOUBLE PRESET
SIGLE PRESET
SINGLE CHASE
MIX CHASE
HOLD
STEP
AUDIO
5 MIN
10 MIN
BLACK OUT
U10
74HC573
GREEN LEDx8
CH1-8
U11
74HC573
GREEN LEDx8
CH9-16
U12
74HC573
GREEN LEDx8
CH17-24
U7
74HC573
YELLOW LEDx8
CHASE1-8
U8
74HC573
YELLOW LEDx4
CHASE9-12
RN471X8
RN471X6
SLIDER-CH1
SLIDER-CH2
SLIDER-CH3
SLIDER-CH4
SLIDER-CH5
SLIDER-CH6
SLIDER-CH7
SLIDER-CH8
SLIDER-CH9
SLIDER-CH10
SLIDER-CH11
SLIDER-CH12
SLIDER-CH13
SLIDER-CH14
SLIDER-CH15
SLIDER-CH16
SLIDER-CH17
SLIDER-CH18
SLIDER-CH19
SLIDER-CH20
SLIDER-CH21
SLIDER-CH22
SLIDER-CH23
SLIDER-CH24
SLIDER-CHASE1
SLIDER-CHASE2
SLIDER-CHASE3
SLIDER-CHASE4
SLIDER-CHASE5
SLIDER-CHASE6
SLIDER-CHASE7
SLIDER-CHASE8
SLIDER-CHASE9
SLIDER-CHASE10
SLIDER-CHASE11
SLIDER-CHASE12
C36 104 U9
C33 104 U8,U13
C31 104 U7,U10
C32 104 U11,12
FOR 74HC573
ORIGINAL
starway
APACHE 24

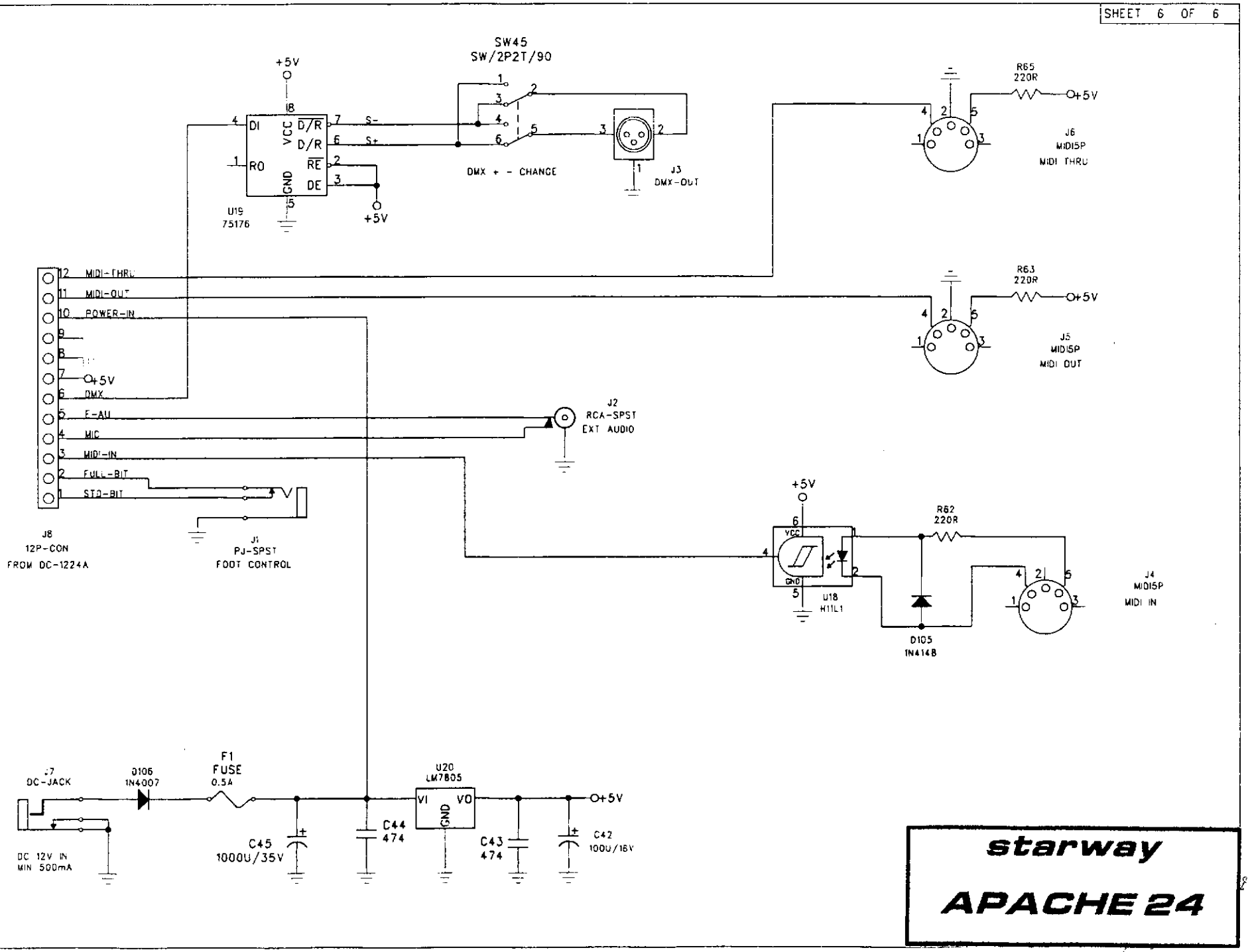
SW45
SW/2P2T/90
DMX + - CHANGE
J3
DMX-OUT
U19
75176
DI
RO
VCC
GND
D/R
RE
DE
S-
S+
+5V
R65
220R
J6
MIDI5P
MIDI THRU
R63
220R
J5
MIDI5P
MIDI OUT
MIDI-THRU
MIDI-OUT
POWER-IN
DMX
E-AU
MIC
MIDI-IN
FULL-BIT
STD-BIT
J8
12P-CON
FROM DC-1224A
J1
PJ-SPST
FOOT CONTROL
J2
RCA-SPST
EXT AUDIO
U18
H11L1
R62
220R
D105
1N4148
J4
MIDI5P
MIDI IN
J7
DC-JACK
DC 12V IN
MIN 500mA
D106
1N4007
F1
FUSE
0.5A
C45
1000U/35V
C44
474
U20
LM7805
VI
VO
GND
C43
474
C42
100U/16V
starway
APACHE 24

正 ORIGINAL