SPIRIT M SERIES



A PERFECT MIX OF FORM AND FUNCTION

Soundcraft

A PERFECT MIX OF FORM AND FUNCTION



In a world full of cheap compact mixers, Soundcraft has achieved something exceptional with the new Spirit M Series. Equally suited to recording and live sound applications, the Spirit M Series delivers a great-sounding, reliable performance, session after session, mix after mix. A mixer for life.

Even before you plug in a Soundcraft Spirit M Series mixer you know it's something very special. The brushed steel side panels aren't just beautiful, they can withstand a weight of 60kg (132 lbs) and are designed to leave the mixer with no sharp edges. Removing these panels is simple, revealing a robust, integral rack mounting system equipping the M Series instantly for a life on the road.

The Spirit M Series is also exceptionally easy to use. The control surface will be immediately familiar to anyone who has used a mixer before and will quickly become second nature even to a novice. All inputs, EQ, auxes, panning and level controls are presented clearly, saving you time when creating your mixes and providing you with more time to spend on achieving the best sound. High quality 100mm faders combine with signal and peak LEDs on every channel and high resolution output metering places the operator in total control. You'll find no unsightly screw heads anywhere on the M Series' front panel to get in the way of your mixing, while



applications

APPLICATIONS



Live sound reproduction



Home studio recording

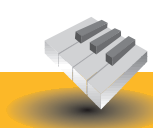

Keyboard, samplers, synthesisers and electronic instrument mixing



a durable, multi-coat paint finish, ensures that a Spirit M Series console always looks as good as it sounds.

From raw component level through to cosmetic finishing, the Spirit M Series has been built to last. Just pick one up and you'll know what we mean. Even the knobs are special, custom designed to our own exacting requirements. We've ensured there is plenty of spacing between the controls, enabling you to comfortably achieve total control of your mix. Even the headphone jack is located at the bottom right hand corner of the mixer so a trailing cable will never get in your way. Just another example of the attention to detail which makes the Soundcraft Spirit M Series the standard against which other compact mixing consoles must now be judged.

Three frame options

The Soundcraft Spirit M Series is available in 4, 8 or 12 mono input channel frame sizes. All three mixers include four stereo inputs and four stereo returns, with all other features and specifications identical.

x3 OPTIONS



4 mono inputs
4 stereo inputs
4 stereo returns



8 mono inputs
4 stereo inputs
4 stereo returns



12 mono inputs
4 stereo inputs
4 stereo returns

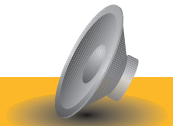

PA mixing for bars, schools, leisure centres, places of worship, etc.



Location mixing



Multimedia production



Video post production

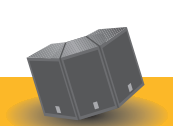

Multi-speaker systems

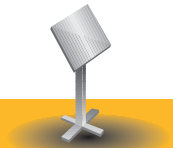

Conference sound systems

Sonic integrity through design



Right from the start, the Spirit M Series has been designed to achieve optimum sound and performance. Cheaper mixers present designers with significant restraints in this respect but, through a fresh and innovative approach, Soundcraft designers have created a mixer that rivals the sonic performance of many high end recording consoles.

Attention to detail in the design of the Spirit M Series makes mixing a positive pleasure. A no-compromise approach to circuit design and to the quality of the components throughout has resulted in a console that delivers exceptionally low noise and crosstalk figures. Mic and line inputs are provided on balanced XLR and 1/4" jack connectors for optimum performance, with the main stereo outputs on balanced XLRs rather than jacks for better integration with other professional equipment. There are also insert points on every mono channel for external signal processing.

More inputs

All three versions of the Spirit M Series feature more inputs for your money than comparable compact consoles. With a choice of 4, 8 or 12 input versions plus 4 stereo inputs and 4 stereo returns, there are more than adequate inputs for connecting keyboards, samplers, CD players and other outboard equipment.

Mic preamp

Much has been written about the importance of the mic preamp in mixer design. And rightly so. Poor quality in this area can never be recovered, however smart the subsequent circuit design. Desirable characteristics include linearity and smooth gain control over a wide range as well as low noise, low distortion and RF rejection. The mic preamp in the new M Series utilises the same design as that used on our award-winning Ghost studio recording consoles. It delivers remarkably low distortion or colouration at all gain levels, operating with a cool reliability that comes from over a quarter of a century's experience. The bottom line is that it sounds great... and it doesn't need a name because it speaks for itself.

The Great British EQ

In the 70s, Soundcraft pioneered circuit design that revolutionised people's perception of EQ. Today many engineers and producers acknowledge those efforts, describing the results as 'British EQ'. And while we don't claim all the credit, it's undoubtedly true that Soundcraft's work in this field made a major contribution to the evolution of that classic sound. In the Spirit M Series we go one step further. While completely happy with the low and mid range circuitry, we identified a potential for improvement in the HF section. The HF EQ on the M Series has a steeper shelf, making it more tightly focused on the frequencies that you are trying to boost, avoiding the associated boost in the nearby mid-range frequencies which happens in many other EQs and which results in mid-range muddiness.

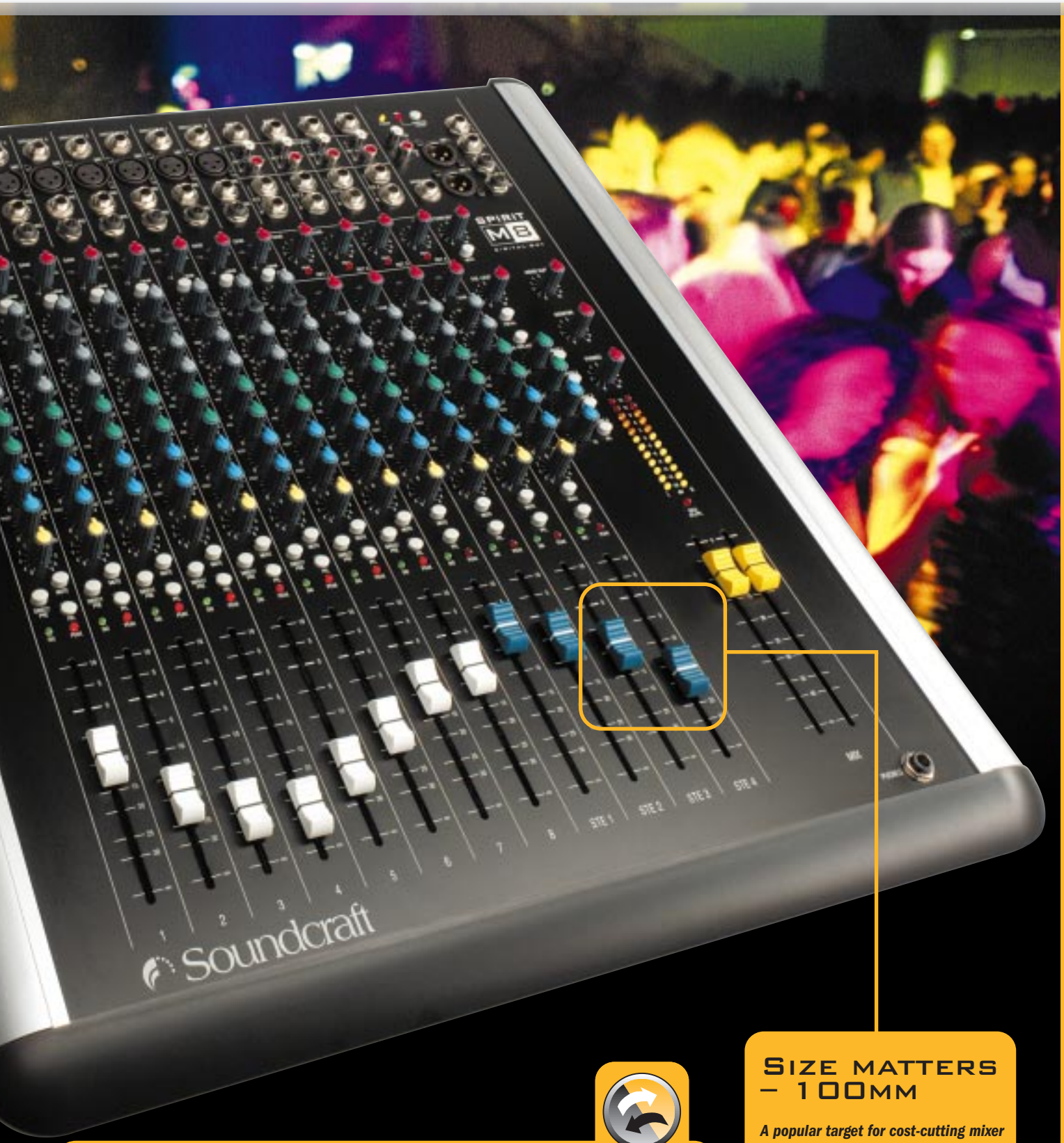

Noise and crosstalk elimination

To minimise noise and hum, effective grounding is essential in mixing console design. The M Series consoles employ a ground tracking architecture usually seen only in much more expensive designs. Careful attention to the grounding around the faders ensures there is minimum ground signal, providing maximum fader attenuation and therefore a high fader cut-off value. The improved circuitry also ensures there is virtually no inter-channel crosstalk.

Size matters – 100mm

A popular target for cost-cutting mixer manufacturers, you won't be short changed with the Spirit M Series' faders. With the benefit of full sized 100mm faders, subtle mixing changes become easy and control is placed right where it matters. At your finger tips. What's more, each channel also features peak and signal LEDs for intuitive level monitoring.

High performance features

Effective grounding is essential in mixing console design to eliminate noise and hum. The grounding in the M Series offers a robust shield to external interference. Its internal power supply is housed in the 'foot' of the mixer, keeping it away from the mic preamps. This ensures the transformer is shielded from the sensitive mic preamps by layers of screening, eliminating any induced noise. Furthermore, the 'foot' operates as a highly efficient heat sink, dissipating heat from the power supply and away from the main circuitry.

Connections



In audio mixing, signal path integrity is everything. While other manufacturers may choose economy over quality, Soundcraft leave nothing to chance – our reputation depends on it. That's why Spirit M Series consoles feature professional grade connectors throughout. All models benefit from XLR mic sockets and metal-shafted jacks are used for the line inputs. Meanwhile, to ensure the absence of hum loops and noise, the insert sockets utilise metal barrelled jacks with an insulating plastic thread. And like all components in the M Series, the connectors are designed and built to give year after year of reliable high performance.

Gain control for stereo returns



Because each of the 4 stereo returns on the Spirit M Series has a level control and peak signal LED, they make perfectly usable additional stereo inputs. Ideal for an expanding keyboard setup or sub mix and just one more example of what you gain if you don't cut corners.



Aux masters

Believe it or not, some manufacturers don't give you master gain controls on all of their aux busses. We do. The Spirit M Series not only provides this useful control but also includes an AFL button for flexible monitoring.

Because levels are constantly changing throughout the signal path – from the preamp stage, through filtering and EQ – the Spirit M Series provides signal detect and peak LEDs on all input channels. Even the stereo returns feature peak LEDs. The main stereo mix has two 12-segment LED meters, with a SOLO AFL/PFL indicator to show whether any solo channels or aux masters are being monitored. With all this information instantly available, efficient control is easy to maintain.



PFL and AFL

At Soundcraft we make no apologies for our professional heritage and this is reflected in the terminology we use. The aux masters feature AFL (After Fade Listen) for monitoring each aux signal, with PFL (Pre Fade Listen) buttons included on the input channels. The term 'solo' does not adequately describe the functions. With the M Series, AFL, PFL and a peak warning indicator mean that audio professionals will always know exactly what signal they are monitoring.

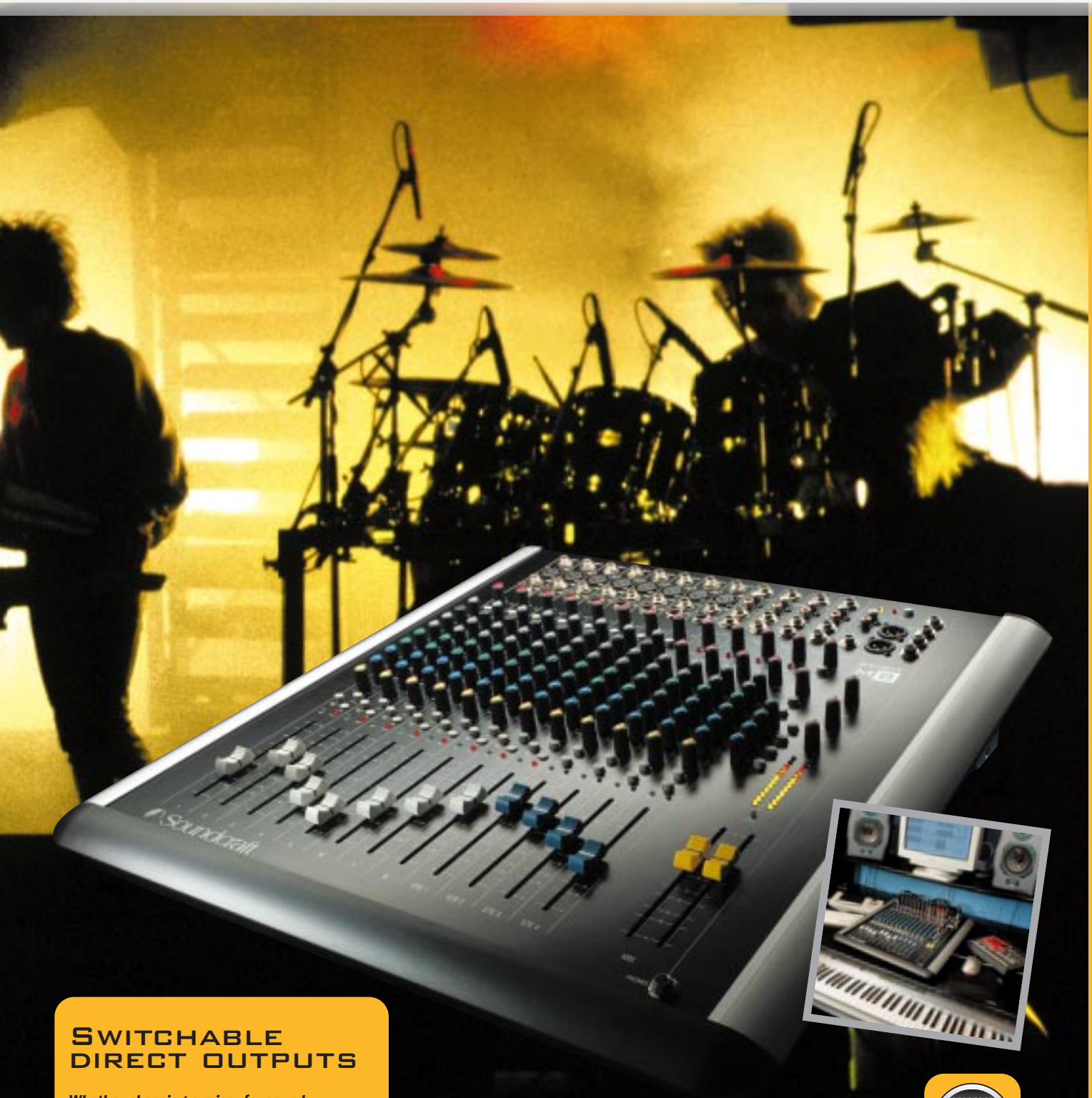

Switchable direct outputs

Whether choosing a mixer for sound reinforcement or recording, one day you'll be glad you chose one with switchable direct outputs. Each direct output is pre/post switchable on every channel to suit your application. Essential for multitrack live recording, switchable direct outputs enable the pre-fade signal to be sent directly to the recorder, regardless of the live mix, for total post production flexibility. And when recording in the studio, the final mix can be sent post-fader to the multitrack, recording every fader movement. An absolute necessity.



Digital output

Each Spirit M Series console features a built in, high quality stereo A/D convertor, allowing a digital version of your mix to be routed directly to digital recording systems such as DAT, MiniDisc or recordable CD. The high quality output takes the guess work out of recording to a PC sound card and, by placing the A/D conversion at the optimum point in the signal path, ensures audio integrity throughout.



Ready for the road

Integral rack mounting









We know that for many people a mixing console must perform duties both in the studio and on the road. Through innovative design, the Spirit M Series can be instantly transformed to suit either environment. The stylish metal side panels are quickly and easily removed to reveal a strong, integral rack mounting system. Back in the studio, simply replace the side panels and it reverts to a desktop mixer. All three Spirit M Series mixers occupy 11U of standard rack space.





Despite its lightweight construction, the build quality of the Spirit M Series mixer remains totally uncompromised. It benefits from an exceptionally rugged chassis, designed to withstand the most demanding working environments, from studio to place of worship to conference to stage.

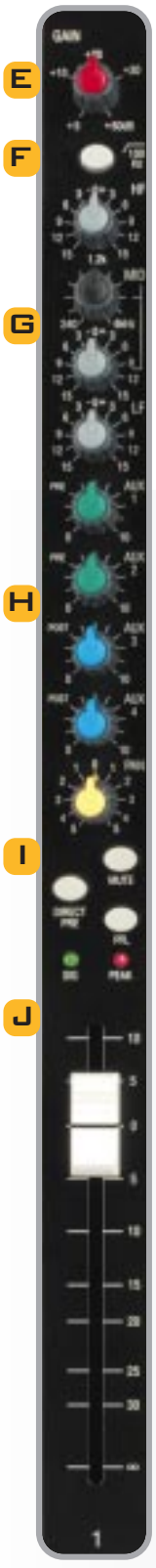

MONO INPUT CONNECTIONS



The three mixers in the Spirit M Series range offer a choice of 4, 8 or 12 mono input channels, each accepting balanced or unbalanced mic and line inputs. Dynamic, condenser and ribbon microphones can be connected via the XLR mic input (B), with 48V phantom power globally switchable via a button on the master section of the mixer. This signal then feeds a high quality mic preamp, which met with popular acclaim when used in our award-winning Ghost console. Keyboards, drum machines, guitars and other equipment can be connected to the balanced 1/4" jack line inputs (C), while an unbalanced insert point on each channel (D) is placed pre-EQ in the signal chain, allowing signal processors, such as compressors or gates, to be added to the mix. The input channels can also be connected to external multitrack recorders or effects units via a switchable direct output (A) for use in both live and recording applications.



MONO INPUT CONTROLS

GAIN CONTROL E

A rotary gain control on each input alters the gain of the input signal, from +5 to +60dB. Linear circuitry within the preamp delivers smooth gain control over the entire gain range.

FILTER SECTION F

A high pass filter with a steep 18dB per octave slope can be used to reduce frequencies below 100Hz. This is ideal for use in live PA applications, since it helps to reduce unwanted stage rumble or popping from microphones.

EQ SECTION G

Equalisation on the Spirit M Series is split into three bands. The HF control provides 15dB of cut or boost for frequencies above 12kHz – ideal for adding crispness to cymbals, vocals, etc. or for removing unwanted hiss or vocal sibilance. Two swept mid frequency controls enable frequencies from 240Hz to 6kHz to be adjusted, offering 15dB of cut or boost at the selected frequency. To add punch to drums and bass or to remove hums and rumbles, adjust signals below 60Hz with the LF control, which features ±15dB of gain adjustment.



AUXILIARY SECTION H

The use of aux sends often varies – from sending separate monitor mixes in live applications to sending signals to effects processors or artists in the recording studio. The Spirit M Series features four aux busses, with two pre-fade and two post-fade aux sends on each input channel to cater for all requirements.

PAN, MUTING, PFL & DIRECT PRE I

The pan control positions each channel's signal across the stereo image, with a mute button to cut the signal completely. A PFL (Pre Fade Listen) button solos the signal for monitoring. When recording a live performance to a multitrack recorder, switching the Direct Pre button selects the direct outputs to be pre-fader. The signal recorded remains unaffected by any fader movements, allowing post-performance mixes to be created.

FADERS AND METERING J

100mm smooth-action faders provide precise control over signal levels for careful balancing of the final mix. And, to ensure you are always operating within the optimum signal range of the console, there are two LED indicators – a signal present LED to indicate when the channel signal exceeds -20dBu and a peak level LED to indicate a signal in excess of +17dBu.

Stereo Input channels



Stereo input connections



The four stereo input channels operate as a pair of mono input channels in a single strip, where any processing applied to the left input will also be applied to the right to ensure the correct stereo image is retained. Perfect for connecting synthesisers, drum machines and other stereo instruments, or for connecting effects processors and tape recorders, the stereo inputs are connected via balanced 1/4" jack inputs (C), delivering optimum performance with other professional audio equipment. The Spirit M Series features dedicated stereo returns for effects processors via RCA phono inputs (B) – these returns can also be used with CD players and other hi-fi equipment. The aux output (A) contains a mix of the aux send signals sent from each input channel, which can then be sent as a monitor mix to stage loudspeakers or to send to an external effects unit.



Stereo input controls



Gain control D

The stereo input control adjusts input level gain from 0 to +22dB, enabling line level sources to be matched.

EQ section E

Equalisation on the stereo channel strip is simpler than the EQ featured on the mono channels. There are two controls, adjusting HF signals at 12kHz and LF signals at 60Hz by ±15dB.

Auxiliary section F

With 4 aux sends on the stereo input channels, the signal can be sent pre-fade for use in a monitor mix (using aux sends 1 & 2) or sent post-fade (via aux sends 3 & 4) for effects processing.

Pan, muting, PFL & direct pre G

The balance control adjusts the amount of the signal sent to the left and right busses. Mute and PFL buttons operate as on the mono input channels, cutting or soloing the stereo channel. With PFL pressed, the pre-fade signal is fed to the headphones, control room output and meters, with levels displayed on the left and right meters in mono to enable levels to be monitored without interruption to the main mix.

Faders and metering H

Like the mono channels, each stereo channel features a smooth 100mm fader, a signal LED to show whether a signal is present and a peak level LED indicating signal levels in excess of +17dBu.

Returns controls



The returns gain control (I), positioned at the top of each stereo channel strip, adjusts the gain for each stereo return, with a peak signal LED indicating when the signal exceeds +17dBu at any of three points: pre-EQ, post-EQ or post-fade. The signals from all four stereo returns are then submixed to the return master (J), which adjusts the overall level of the stereo returns in the main mix. When stereo returns are used to return a signal from an effects unit, the mute button (K) offers a fast method of comparing the signal with or without processing.





MASTER SECTION CONNECTIONS



The M Series master section features level controls, metering, and the main stereo outputs. Global control over phantom power (a method of transmitting power along the same cable as the microphone signal) is offered via a push button (A). +48V phantom power will then be applied to all mic inputs and an LED will illuminate. An additional LED lights when the M Series mixer is on. Audio connections on the master panel include 2-track recorder playback inputs on unbalanced RCA phonos (B), studio monitor outputs (C) and a mix insertion point (D). The main left and right mix outputs are provided on balanced XLR connectors (E), with a mono sum signal available on a balanced 1/4" jack (F), perfect for use as a fill speaker for PA applications.

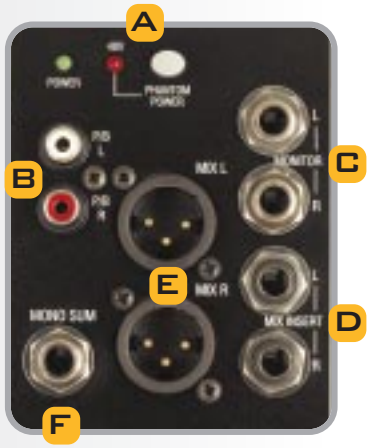

MASTER SECTION CONTROLS

PLAYBACK LEVEL G

The playback gain control adjusts the level from the 2-track playback inputs, ideal for use when monitoring the signal off tape. This playback signal can be monitored separately by pressing the PFL button, which routes it to the control room speakers or to the headphones, replacing any existing monitoring signals. The 'P/B Replace Mix' button routes the playback signal directly to the main mix, replacing any signal that may be present. This button is perfect for use during live performances, allowing CDs to be played during the interval at the touch of a button without the need to adjust the mix or move faders. With the playback routed to mix in this way, the mics on stage are protected from any 'unauthorised' performances from the audience.

MONO SUM, MONITOR AND PHONES LEVEL H

Levels sent to the mono sum output, monitor output and headphones can be adjusted using these three rotary controls. And when a pair of headphones are plugged into the phones socket (K) at the bottom right of the mixer, the monitor outputs are cut for easier headphone listening.

AUXILIARY MASTERS I

Each aux bus features a master level control, with an AFL (After Fade Listen) button enabling monitoring of each aux output. When pressed, the AFL button routes the aux output to the control room monitors or to the headphones, where it can be monitored on the master stereo meters.

FADERS AND METERING J

Controlling the overall stereo mix level are two 100mm faders, with two 12-segment 3-colour LED peak-reading bargraph meters monitoring the mix right and mix left outputs. These meters normally follow the current monitor selection, so if any PFL or AFL is pressed, the meters will switch to monitor this and the Solo AFL/PFL LED will light. The different coloured LEDs make it simple to follow the signal levels without needing to read the actual numbers printed between the columns of lights.



HEADPHONE OUTPUT K

The headphone socket is positioned to the right of the main faders, enabling easy reach of both the mixer and studio outboard equipment while wearing headphones. This position avoids any trailing headphone cables which could catch or accidentally adjust rotary controls on the mixer.

Applications

The great flexibility of the Spirit M Series enables it to be used in a wide variety of applications. Here are some suggestions.

Live sound reinforcement

Live sound reinforcement requires different mixes – a stereo master mix for the audience and one or more monitor mixes for the performers on stage. The monitor mixes can be set up using Aux 1-4 on the M Series mixer. When a venue uses multiple fill speakers, delay should be added to speakers that are closer to the listener. The direct outputs on the Spirit M Series can be used to record each of the mono input channels to a multitrack recorder. Each direct output can be individually switched to be pre-fade, ensuring the signal at these outputs remains unaffected by any movements of the channel faders during the live performance. Different mixes of the performance can then be made after the event.

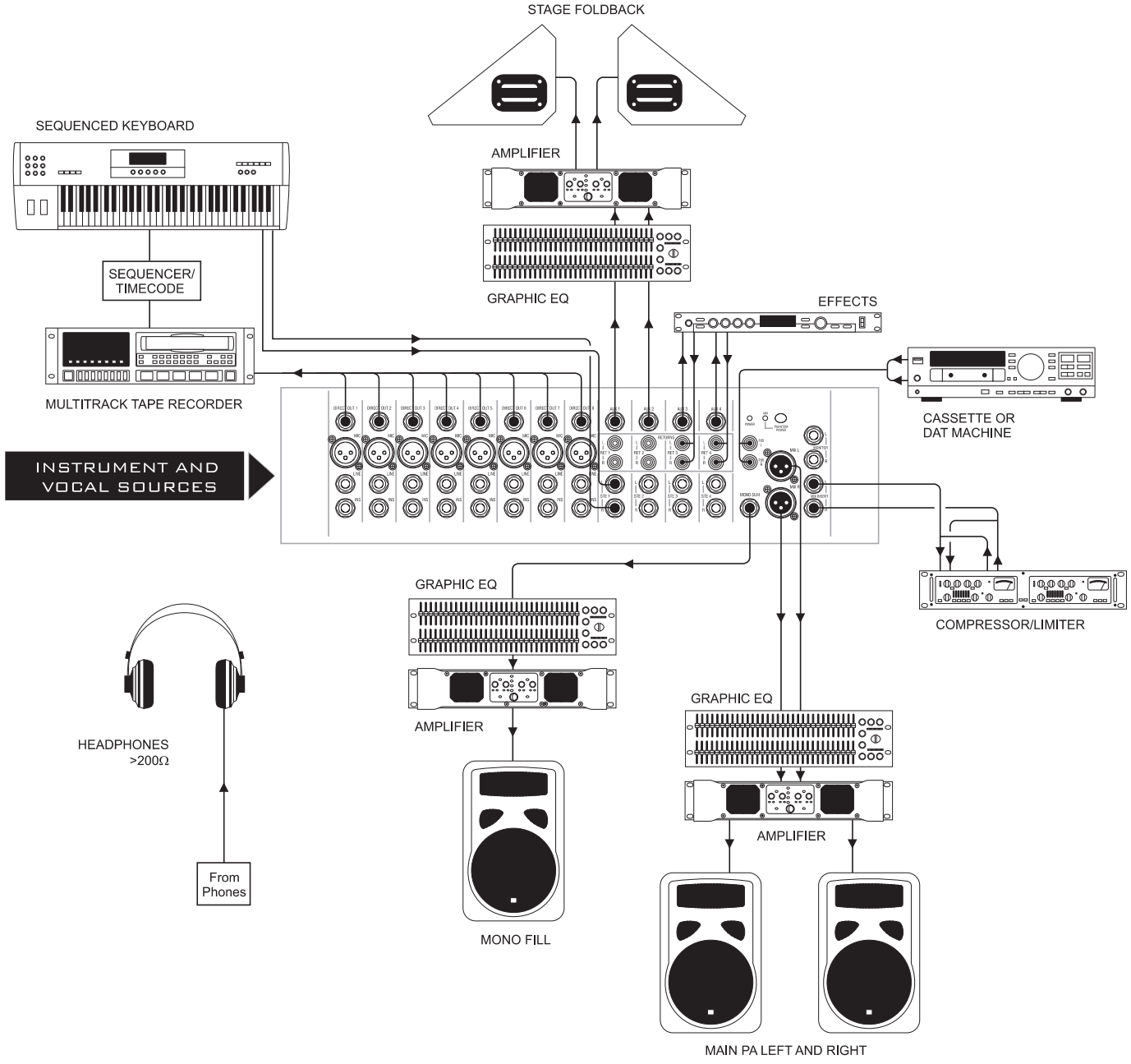

RECORDING

The M Series mixers are perfect for use when laying down tracks onto multitrack recorders. You can use the direct outputs (channels 1-8 on the Spirit M8, for example) to feed the multitrack recorder. These direct outputs can either be set to be pre-fade, so the levels recorded to the multitrack are unaffected by the position of the channel faders, or set to post-fade, where every movement of each channel's faders are recorded. The main mix output provides a stereo signal for sending to a 2-track recorder, such as a DAT or CD-R recorder, with a digital version of this mix output available via the S/PDIF output.

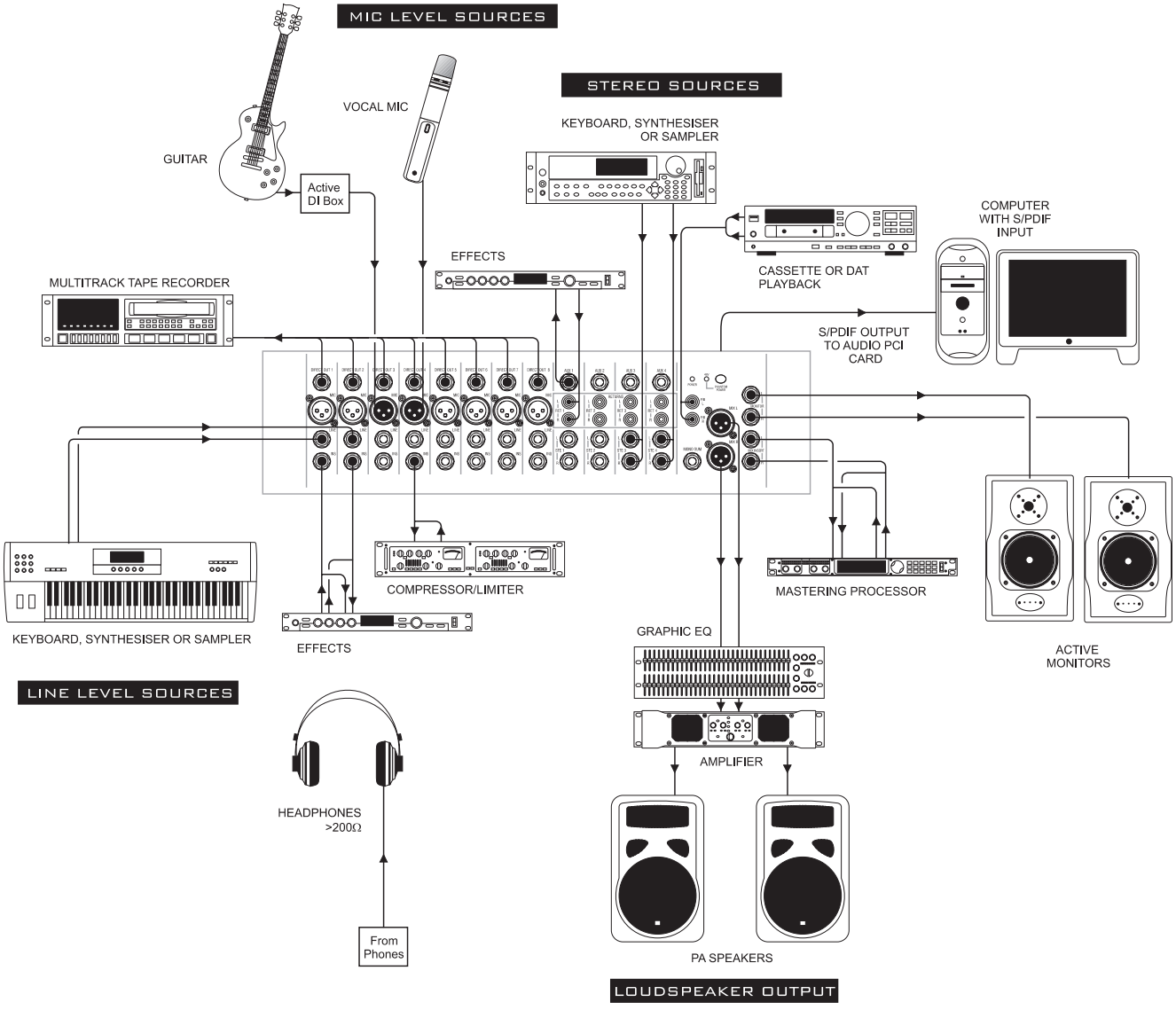

Multispeaker installations

It is simple to set up multiple speaker configurations with the M Series mixers. With their 4 auxes, stereo monitor output, mono sum output and a main stereo mix output, there are plenty of feeds for even the largest installations.

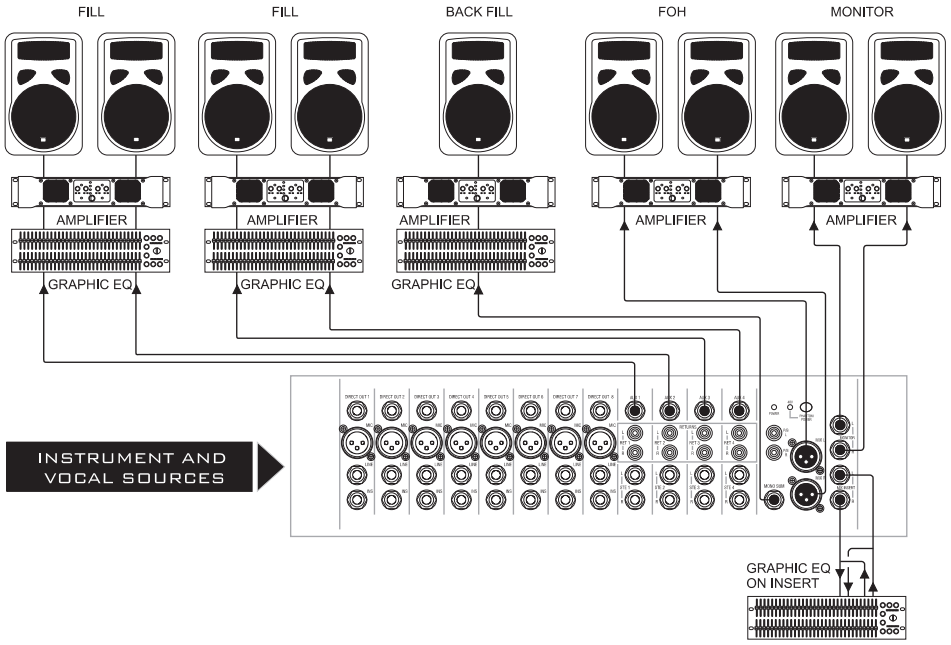

Places of worship

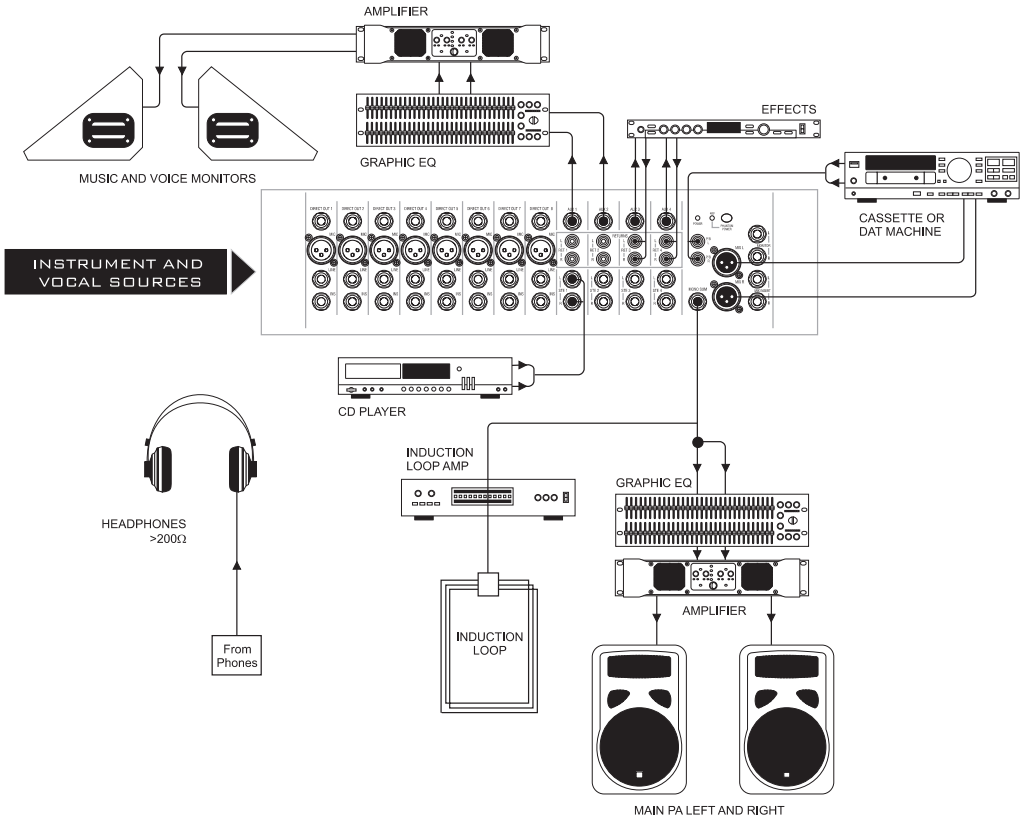

With the M Series mixer configured as shown in this diagram, this will provide a mono output to feed the main PA system, with an induction loop added for the hard of hearing. For larger scale occasions, music and voice monitor mixes may be required, which can be sent via the auxes. The main stereo mix output can also be sent to a 2-track recorder, such as a cassette or DAT recorder, if the occasion is to be recorded.

Linking two Spirit M Series mixers

When you need extra input channels, you can add a second Spirit M Series mixer. This diagram shows the main mix output of the first mixer feeding a stereo input on the second mixer.

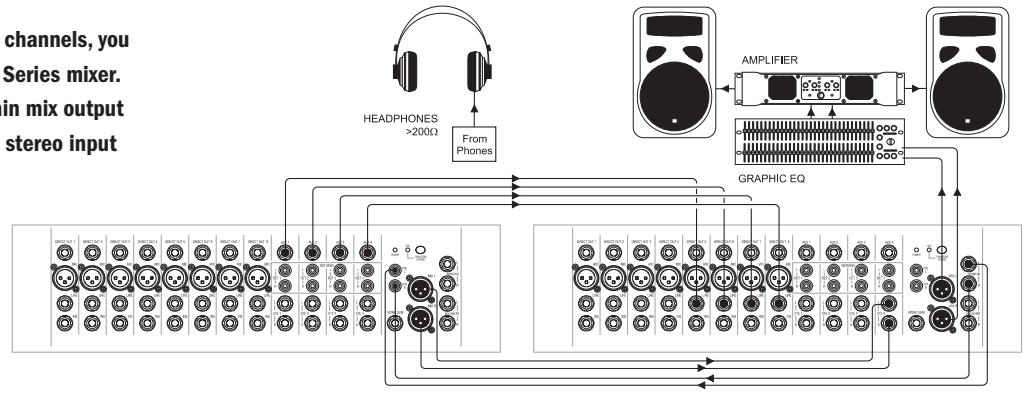

System Block Diagram

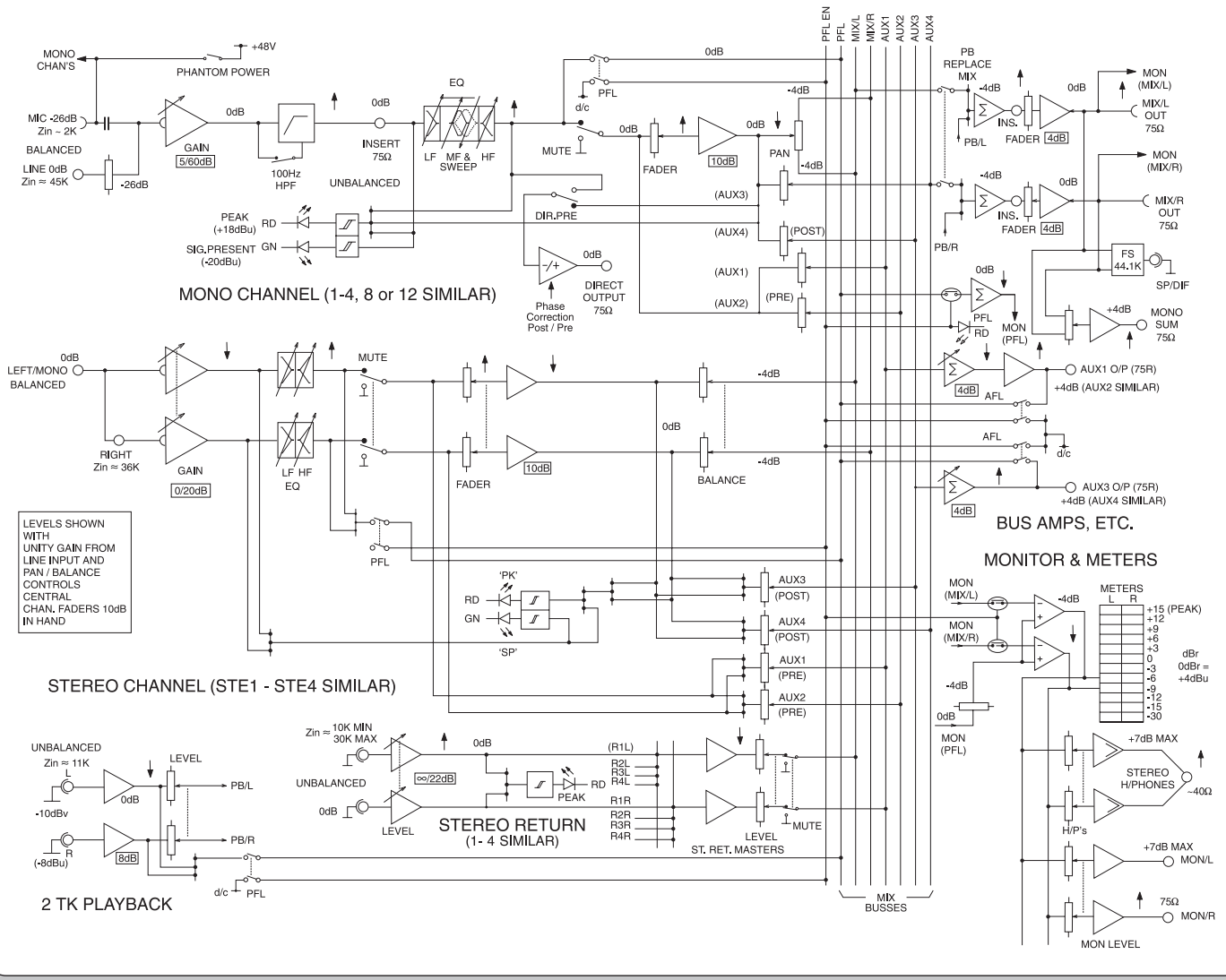

Spirit M Series specifications

Frequency response

Mic / Line Input to any Output ..... +/-1dB 20Hz – 20kHz

T.H.D.

Mic Sensitivity -30dBu, +20dBu @ all outputs ..... < 0.008% @ 1kHz

Noise

Mic Input E.I.N. (maximum gain, measured 22Hz – 22kHz, unweighted) ..... -128dBu
Aux and Mix Outputs (8 ch. routed, faders down, 22Hz – 22kHz, unweighted) .. < -84dBu

Crosstalk

Channel Mute ..... < 90dB 20Hz – 10kHz, < 80dB 10kHz – 20kHz
Fader Cut-Off (ref. Fader 0dB) ..... < 90dB 20Hz – 10kHz, < 80dB 10kHz – 20kHz
Routing Isolation ..... < 90dB 20Hz – 10kHz, < 80dB 10kHz – 20kHz

Input & output impedances

Microphone Input ..... ~ 2kΩ
Mono Channel Line Input ..... > 40kΩ
Stereo Input (Stereo Mode) ..... > 30kΩ
Stereo Returns ..... > 10kΩ
Headphones Output ..... ~ 40Ω
All Other Audio Outputs 75Ω

Input & output levels

Microphone Input Maximum Level ..... +12dBu
Mono Channel Line Input Maximum Level ..... +38dBu
Stereo Input Maximum Level ..... +21dBu
Headphones Output (into 200Ω) 150mW
All Other Audio Outputs ..... +21dBu into 10kΩ

Filter

HP 100Hz, 18dB/octave

EQ

HF ..... 12kHz, +/-15dB
MF ..... 240Hz – 6kHz, +/-15dB
LF ..... 60Hz, +/-15dB

Dimensions

M4 (With sides) ..... 15.6"/397 (W), 4.7"/119 (H), 20.6"/523 mm (D)
M4 (W/O sides) ..... 14.7"/373 (W), 4.7"/119 (H), 19.3"/490 mm (D)
M8/12 (With sides) ..... 19.9"/506 (W), 4.7"/119 (H), 20.6"/523 mm (D)
M8/12 (W/O sides, rackmount) ..... 19.0"/483 (W), 4.7"/119 (H), 19.3"/490 mm (D)

Weight

M4 ..... 14.8 lbs / 6.75kg
M8 ..... 18.1 lbs / 8.25kg
M12 ..... 18.8 lbs / 8.55kg

Note – All figures are measured and monitored from real production units.

M4 dimensions

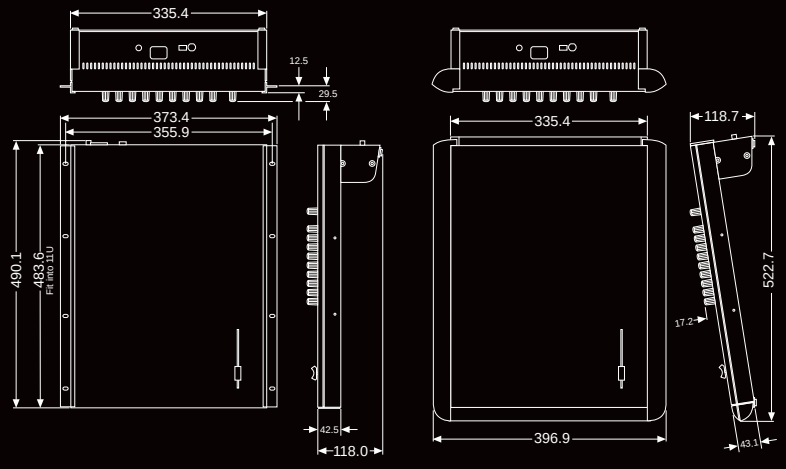

M8/12 dimensions

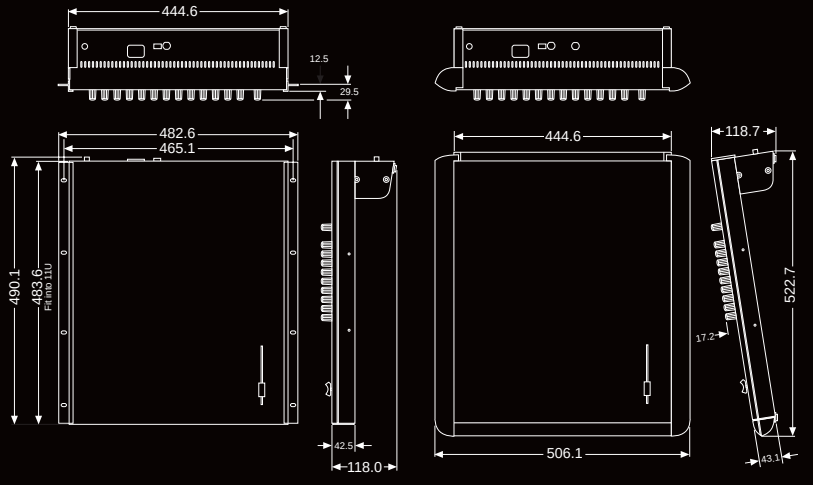

Soundcraft

Soundcraft Registered Community Trade Mark / RTM No. 000557827

SOUNDCRAFT
HARMAN INTERNATIONAL INDUSTRIES LTD.
CRANBORNE HOUSE,
CRANBORNE ROAD,
POTTERS BAR,
HERTS, EN6 3JN, UK.
TEL: +44 (0)1707 665000
FAX: +44 (0)1707 660742
EMAIL: info@soundcraft.com

SOUNDCRAFT USA
1449 DONELSON PIKE,
NASHVILLE TN 37217, USA
TEL: 1-615-360-0471
FAX: 1-615-360-0273
EMAIL: soundcraft-usa@harman.com

www.soundcraft.com
www.spiritbysoundcraft.com

Soundcraft reserves the right to improve or otherwise alter any information supplied in this document or any other documentation supplied hereafter. E&OE 01/01
This equipment complies with the EMC Directive 89/336/EEC

Part No. ZL0574 STD ZL0575 US

A Harman International Company

CE