SOUNDCRAFT D-MIX 500 588

User Guide



This equipment complies with the EMC Directive 89/336/EEC

For further details contact:
Harman International Industries Ltd,
Cranborne House, Cranborne Road,
Potters Bar, Hertfordshire, EN6 3JN, U.K.

Tel: +44 (0) 1707 665000
Fax: +44 (0) 1707 660482

© Harman International Industries Ltd. 1996,1997
All rights reserved
Parts of the design of this product may be protected by worldwide patents.

Part No. ZM0143 Issue 3

Soundcraft is a trading division of Harman International Industries Ltd.

Information in this manual is subject to change without notice and does not represent a commitment on the part of the vendor. Soundcraft shall not be liable for any loss or damage whatsoever arising from the use of information or any error contained in this manual.

No part of this manual may be reproduced, stored in a retrieval system, or transmitted, in any form or by any means, electronic, electrical, mechanical, optical, chemical, including photocopying and recording, for any purpose without the express written permission of Soundcraft.

It is recommended that all maintenance and service on the product should be carried out by Soundcraft or its authorised agents. Soundcraft cannot accept any liability whatsoever for any loss or damage caused by service, maintenance or repair by unauthorised personnel.

Harman International Industries Ltd.
Cranborne House,
Cranborne Road,
Cranborne Industrial Estate,
Potters Bar,
Herts.,
England.
EN6 3JN.

Tel: 01707 665000
Fax: 01707 660482

Table of Contents

1. Introduction **1.1**

Introduction *1.2*

Front Panel *1.3*

Warranty *1.4*

2. Installation **2.1**

Dimensions *2.2*

Installation *2.3*

Precautions and Safety Instructions *2.4*

Signal Levels *2.5*

Connecting The Inputs *2.6*

Connecting The Outputs *2.7*

Connections *2.9*

3. System Block Diagram **3.1**

System Block Diagram *3.2*

4. Functional Descriptions **4.1**

Stereo Input Channels 1 & 7 - CD/AV *4.2*

Stereo Input Channels 2 & 6 - VINYL/CD *4.3*

Mono Input Channels 3 & 4 - MIC/LINE Input *4.4*

Stereo Input Channel 5 - VINYL 3/INPUT C *4.6*

Master Section *4.8*

5. Specifications **5.1**

Typical Specifications *5.2*

1. Introduction

Introduction

With a wide variety of choices in both inputs and outputs, the D-MIX500 delivers class-leading flexibility in a cost effective package. A total of seven input channels, four main stereo, one auxiliary stereo and two mono, each with two inputs, will handle up to ten stereo input sources. To keep the DJ fully informed of selected signal sources and outputs, coloured LEDs accompany every major switch on the front panel. Both professional and consumer CD output levels are catered for, and three RIAA equalised phono inputs accommodate turntable pickups.

The D-MIX500 is designed as a high performance mixer for the professional DJ. Front panel controls are kept to a minimum to give a clear and uncluttered appearance while providing sufficient flexibility and choice to meet individual requirements.

The design of the mixer allows for a choice of installations from standard 19" rack mountings, occupying 7U of height, to free standing use on a desk top or table.

All connections are on the rear panel of the mixer for easy access once installed.

Channels

The D-MIX500 contains a variety of channels as follows:

Two Mono Mic/Line Input channels with insert point and 3-band EQ.

Five Stereo Input channels, with two switched stereo sources and a 3-band EQ.

A Master section containing main outputs, monitoring, master faders and metering.

Metering

The mixer is fitted with three meters:

Main Left and Right outputs.

Cue Mix.

Power Supplies

The console requires the D-MIX500 power supply.

Part No.	**Voltage**
HB0166	120V
HB0167	230V
HB0169	220V

Front Panel

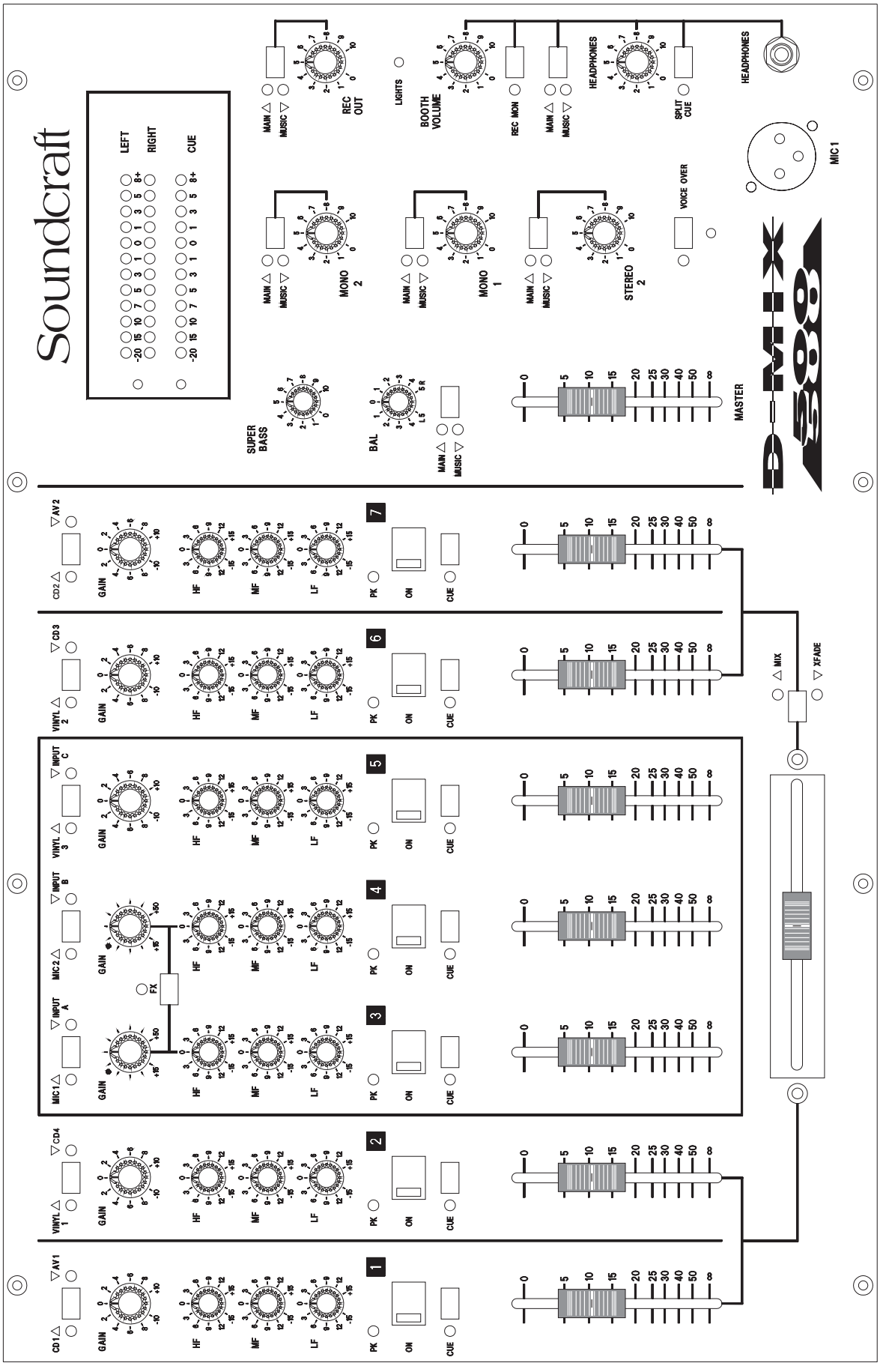
Soundcraft
LEFT
RIGHT
CUE
MASTER
REC OUT
BOOTH VOLUME
REC MON
HEADPHONES
SPLIT CUE
LIGHTS
VOICE OVER
MIC 1
MONO 2
MONO 1
STEREO 2
SUPER BASS
BAL
MIX
XFADE
GAIN
HF
MF
LF
PK
ON
CUE
FX

Warranty

1 **Soundcraft** is a trading division of Harman International Industries Ltd .

End User means the person who first puts the equipment into regular operation.

Dealer means the person other than Soundcraft (if any) from whom the End User purchased the Equipment, provided such a person is authorised for this purpose by Soundcraft or its accredited Distributor.

Equipment means the equipment supplied with this manual.

2 If within the period of twelve months from the date of delivery of the Equipment to the End User it shall prove defective by reason only of faulty materials and/or workmanship to such an extent that the effectiveness and/or usability thereof is materially affected the Equipment or the defective component should be returned to the Dealer or to Soundcraft and subject to the following conditions the Dealer or Soundcraft will repair or replace the defective components. Any components replaced will become the property of Soundcraft.

3 Any Equipment or component returned will be at the risk of the End User whilst in transit (both to and from the Dealer or Soundcraft) and postage must be prepaid.

4 This warranty shall only be available if:

a) the Equipment has been properly installed in accordance with instructions contained in Soundcraft's manual; and

b) the End User has notified Soundcraft or the Dealer within 14 days of the defect appearing; and

c) no persons other than authorised representatives of Soundcraft or the Dealer have effected any replacement of parts maintenance adjustments or repairs to the Equipment; and

d) the End User has used the Equipment only for such purposes as Soundcraft recommends, with only such operating supplies as meet Soundcraft's specifications and otherwise in all respects in accordance Soundcraft's recommendations.

5 Defects arising as a result of the following are not covered by this Warranty: faulty or negligent handling, chemical or electro-chemical or electrical influences, accidental damage, Acts of God, neglect, deficiency in electrical power, air-conditioning or humidity control.

6. The benefit of this Warranty may not be assigned by the End User.

7. End Users who are consumers should note their rights under this Warranty are in addition to and do not affect any other rights to which they may be entitled against the seller of the Equipment.

2. Installation

Dimensions

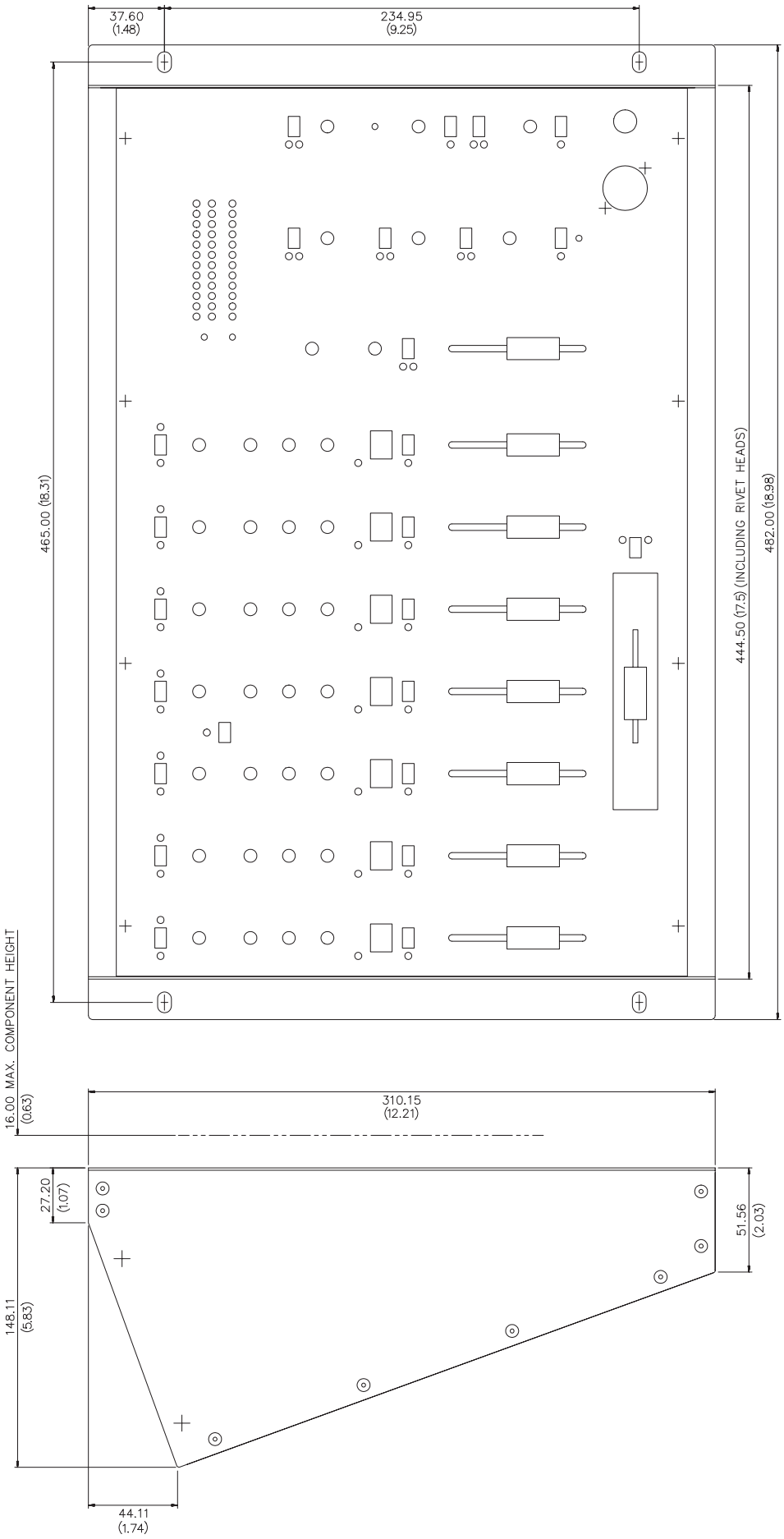
37.60
(1.48)
234.95
(9.25)
465.00 (18.31)
444.50 (17.5) (INCLUDING RIVET HEADS)
482.00 (18.98)
16.00 MAX. COMPONENT HEIGHT
(0.63)
310.15
(12.21)
27.20
(1.07)
51.56
(2.03)
148.11
(5.83)
44.11
(1.74)

Installation

The D-MIX500 is designed for reliability and high performance, and is built to the highest standards. Whilst great care has been taken to ensure that installations are made as troublefree as possible, care taken at this stage, followed by correct setting up will be rewarded by a long life and reliable operation.

Wiring Considerations

(A) For optimum performance it is essential for the earthing system to be clean and noisefree, as all signals are referenced to this earth. A central point should be decided on for the main earth point, and all earths should be 'star-fed' from this point. It is recommended that an individual earth wire be run from each electrical outlet, back to the system star point to provide a safety earth reference for each piece of equipment.

(B) Install separate mains outlets for the audio equipment, and feed these independently from any other equipment.

(C) Avoid locating mains distribution boxes near audio equipment, especially tape recorders, which are very sensitive to electromagnetic fields.

Power Supply

Always ensure that you use the correct PSU for your mixer The D-MIX500 uses a D-MIX500 power supply. There are three different PSU voltages for different geographical areas.

Part No.		**Voltage**
HB0166	USA	120V
HB0167	UK	230V
HB0169	EUR	220V

Warning!

Before switching on your D-MIX500 console, check that the power supply unit is the correct one for your area.

Precautions and Safety Instructions

General Precautions

Avoid storing or using the mixing console in conditions of excessive heat or cold,or in positions where it is likely to be subject to vibration, dust or moisture. Do not use any liquids to clean the fascia of the unit: a soft dry brush is ideal. Solvents may cause damage to paint or plastic parts.

Avoid using the console close to strong sources of electromagnetic radiation (e.g video monitors, high power electric cabling): this may cause degradation of the audio quality due to induced voltages in connecting leads and chassis. For the same reason, always site the power supply away from the unit.

Caution!

In all cases, refer servicing to qualified personnel.

Handling and Transport

The console is supplied in a strong carton. If it is necessary to move it any distance after installation it is recommended that this packing is used to protect it. Be sure to disconnect all cabling before moving. If the console is to be regularly moved we recommend that it is installed in a foamlined flightcase. At all times avoid applying excessive force to any knobs, switches or connectors.

Power Supplies & Cables

Always use the power supply and cable supplied with the mixer: the use of alternative supplies may cause damage and voids the warranty; the extension of power cables may result in malfunction of the mixing console.

Warning!

Always switch the power supply off before connecting or disconnecting the mixer power cable, removing or installing the Cross Fader, and servicing. In the event of an electrical storm, or large mains voltage fluctuations, immediately unplug from the mains.

Signal Levels

It is important to supply the correct input levels to the console, otherwise signal to noise ratio or distortion performance may be degraded; and in extreme cases, damage to the internal circuitry may result. Likewise, on all balanced inputs avoid sources with large common-mode DC, AC or RF voltages, as these will reduce the available signal range on the inputs. Note that 0dBu=0.775V RMS.

The microphone inputs are designed for use with balanced low impedance (150 or 200 ohms) microphones.

The Phones output is a 3-pole "A" gauge jack, suitable for high or low impedance headphones (8ohms - 2kohms).

Caution!

Do not use unbalanced microphones or battery powered condenser microphones without isolating the +48V phantom power: degraded performance or damage to the microphone may result.

The sensitivity of the Mic inputs is variable from -15dBu to -50dBu, with a maximum input level of +4dBu. The Mono Line Input sensitivity is variable from -20dBu to +15dBu with a maximum input level of +30dBu.

The Stereo Input is provided with a gain trim of +/-10dB, with a maximum input level of +32dBu for CD or AV inputs. Vinyl inputs are suitable for moving magnet cartridges.

The main outputs of the mixer (Left/Right) are balanced at a nominal level of +4dBu. Maximum output level is +26dBu into 5kohms.

Connecting The Inputs - Examples

Example 1

In this example, 2 CD players are connected: one each to channels 1 and 7. There is also a turntable connected to channel 5. The DJ's mic would normally be plugged into mic 1 (channel 3) via the front panel, and is therefore not shown in this diagram; an additional mic shown is connected to mic 2 (channel 4). This may be used by, for example the MC. Finally there is an Effects unit and a limiter/compressor connected to the FX insert point: these would be used by the mic channels.

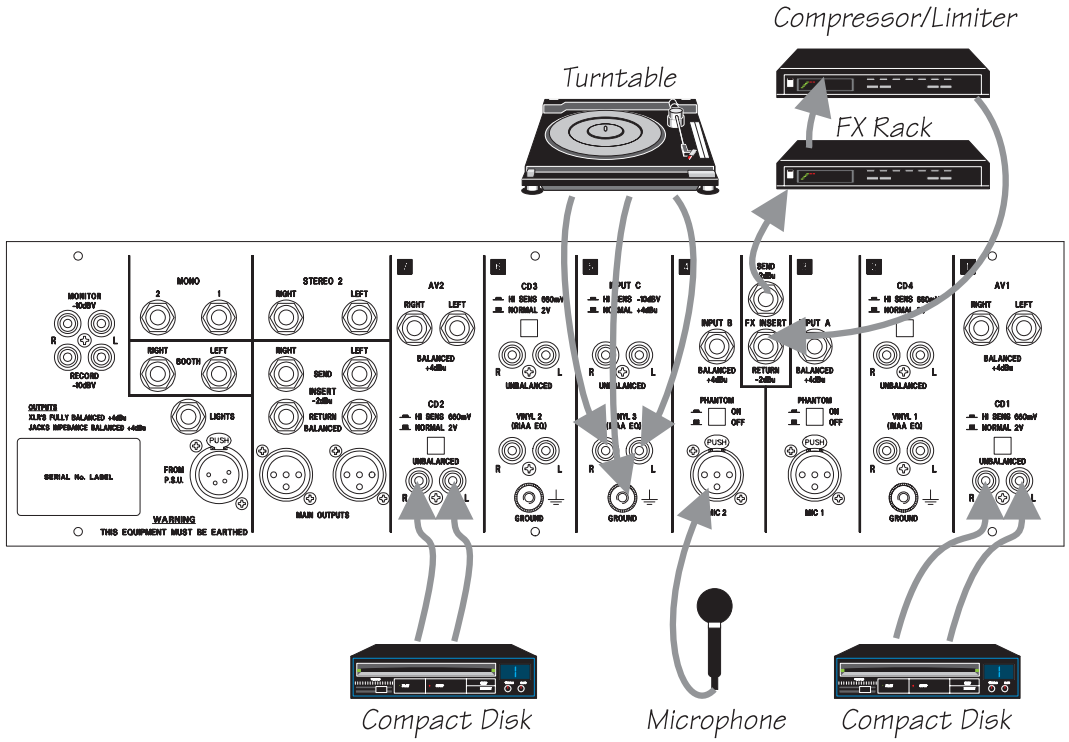

Example 2

In this example, 2 turntables are connected: one each to to channels 2 and 6. There is also a CD player connected to channel 5. The DJ's mic would normally be plugged into mic 1 (channel 3) via the front panel, and is therefore not shown in this diagram. Other options may include a Cassette Deck connected to channel 7, and a Video Disk Player connected to channel 1, for example.

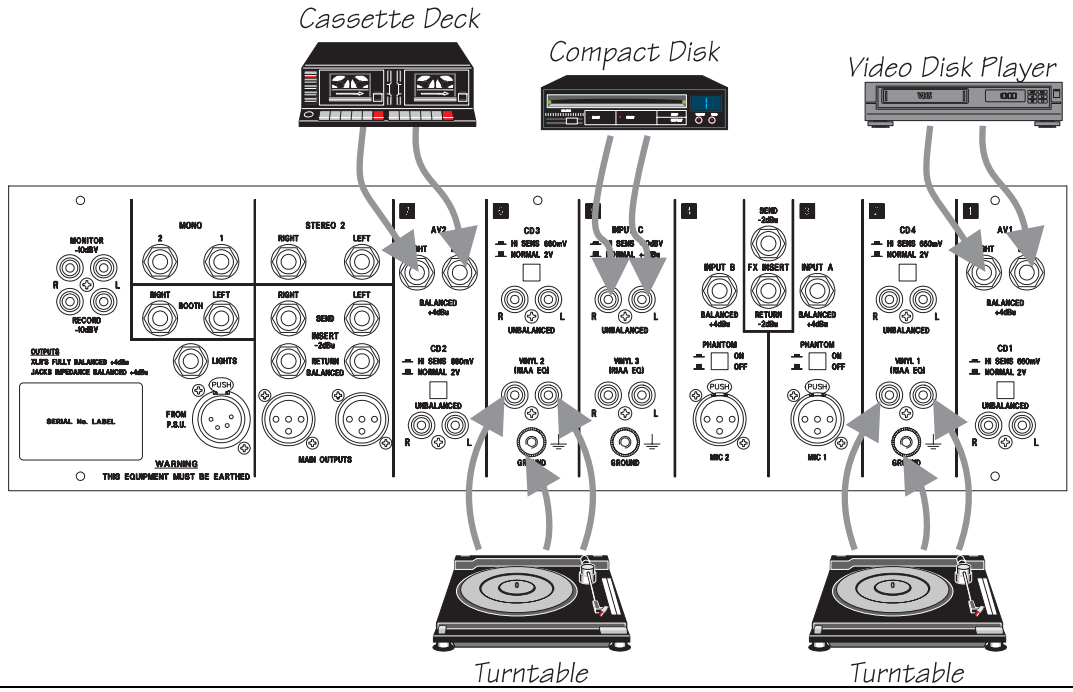

Connecting The Outputs - An Example

In the example below, a 2-channel graphic equaliser is connected to the main outputs' insert points. The main outputs are driving power amps, with speakers on the main dance floor. A secondary dance floor is served by power amps and speakers which are driven by the stereo 2 outputs. A bar or foyer area may have a mono amp and speaker which is, in the example shown, fed from the mono 1 output.

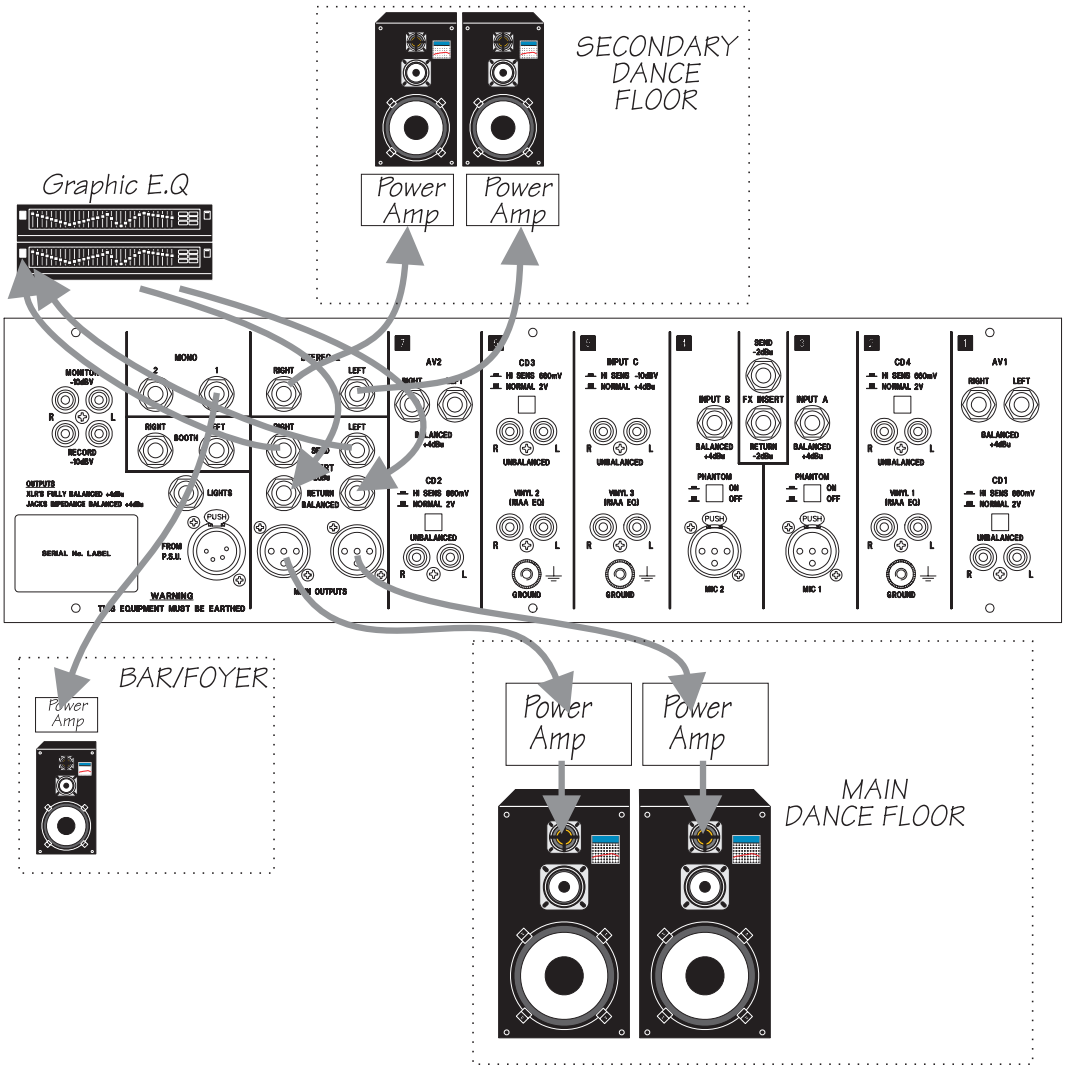

Connecting the DJ System Outputs - An Example

In the example below, the DJ booth amps and speakers are shown fed from the Booth outputs. There is also a tape recorder to record the console's output, this is connected to the record sockets. Finally, a lighting controller is fed from the lights output.

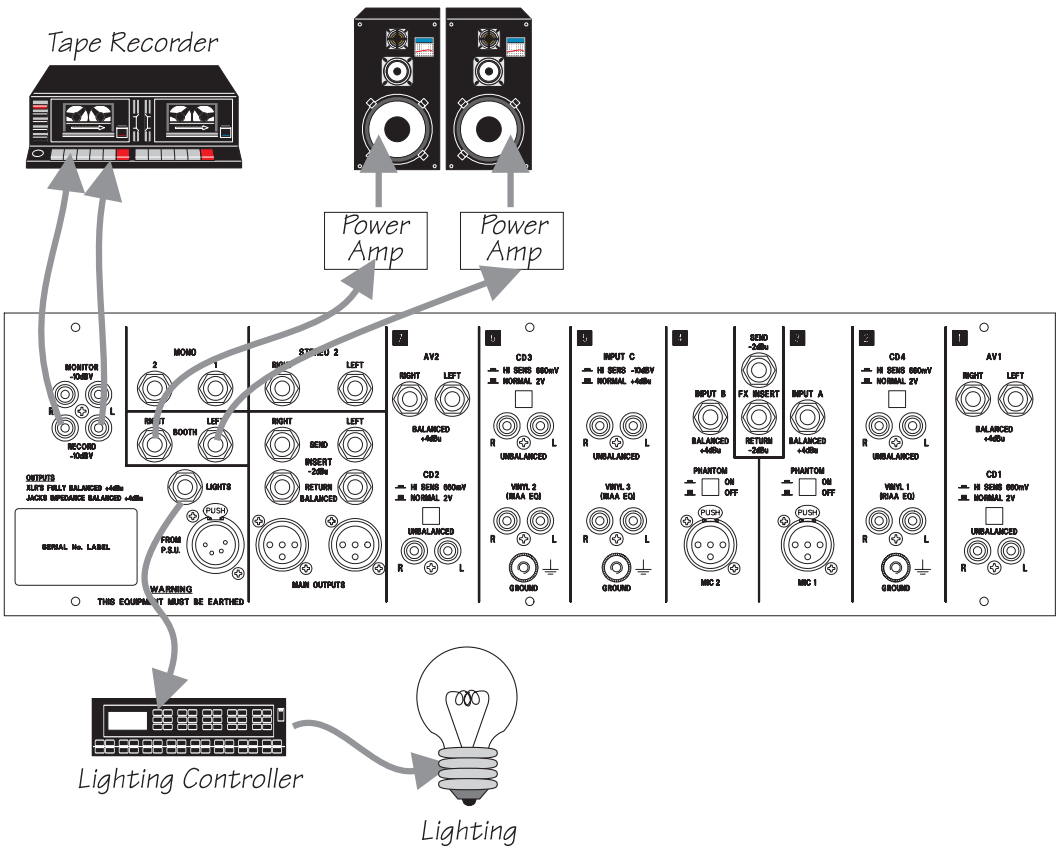

Connections

Wiring conventions

The D-MIX500 uses various different types of audio connector: 3-pin XLR , ¼" 3-pole jacks and RCA phono connectors. This section describes how to connect external equipment to the console. Correctly-made cables of the proper type will ensure peak performance from your mixer.

Inputs

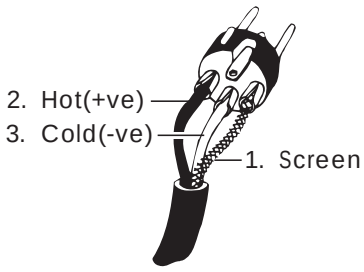

Balanced Input

XLRs

The mic input accepts XLR-type connectors and is designed to suit a wide range of BALANCED or UNBALANCED low-level signals. Professional dynamic, condenser or ribbon mics are best because these will be LOW IMPEDANCE. While you can use low-cost HIGH IMPEDANCE mics, you do not get the same degree of immunity to interference on the microphone cable and as a result the level of background noise may be higher. If you turn the PHANTOM POWER on, the socket provides a suitable powering voltage for condenser mics.

DO NOT use unbalanced sources with the phantom power switched on. The voltage on pins 2 & 3 of the XLR may cause serious damage.

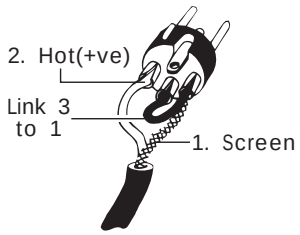

Unbalanced Input

Jack Sockets

The 1/4" input jacks on this console fall into one of two categories: balanced inputs and unbalanced inputs. The diagram on the left shows the connections for both types.

The following input jack sockets are **balanced**:

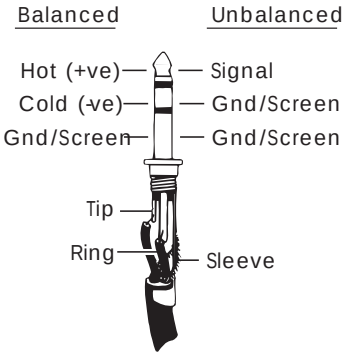

AV1 Left, AV1 Right, Input A, Input B, AV2 Left, AV2 Right, Main Output Insert Return Left and Main Output Insert Return Right.

These inputs accept 3-pole 1/4" "A" gauge (TRS) jacks, or 2-pole mono jacks which will automatically ground the "cold" input.

These inputs are BALANCED for low noise and immunity from interference, but you can use UNBALANCED sources by wiring up the jacks as shown left, although you should then keep the cable lengths as short as possible to minimise interference pick-up on the cable. Note that the ring must be grounded (by linking it to the sleeve) if the source is unbalanced.

The FX Insert Return jack socket is **unbalanced**. It will accept a 3-pole 1/4" "A" gauge (TRS) jack, or a 2-pole mono jack. It you use a 3-pole jack, the ring must be linked to the sleeve.

Phono Plugs

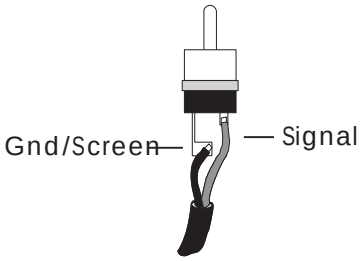

The phono plug inputs are all **unbalanced**.

The phono inputs are as follows:

CD1 Left, CD1 Right, CD2 Left CD2 Right, CD3 Left, CD3 Right CD4 Left, CD4 Right, Vinyl1 Left, Vinyl1 Right, Vinyl2 Left, Vinyl2 Right, Vinyl3 Left, Vinyl3 Right,Input C Left, Input C Right, Monitor Left and Monitor Right.

The vinyl inputs have RIAA equalisers for turntables.

Outputs

XLRs

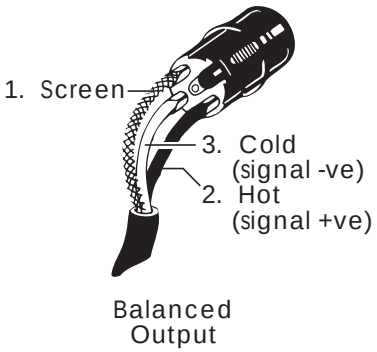

The left and right main outputs are on 3-pole male XLR connectors, wired as shown on the left. They are balanced outputs, allowing long cable runs to balanced amplifiers or other equipment. If the amplifier (or other equipment) which you are using has an unbalanced input, you should wire the output from the D-MIX500 as shown in the 'Balanced To Unbalanced' diagram below.

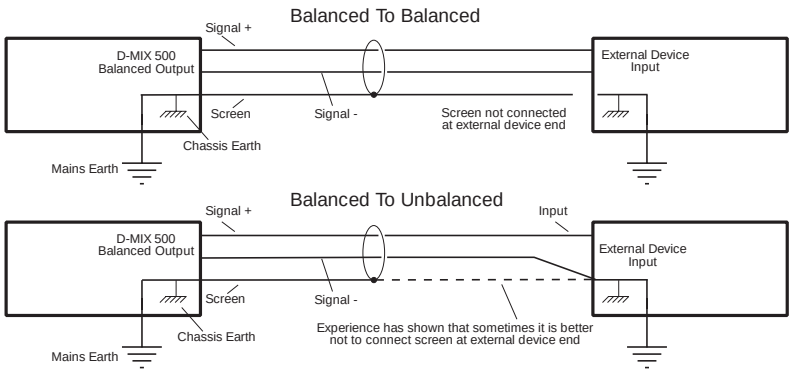

Connections

Jack Sockets

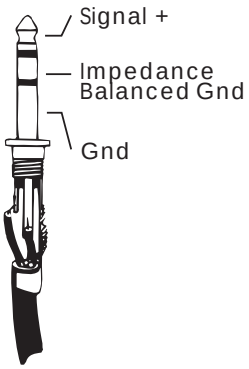

All of the jack socket outputs are impedance balanced. They are on 3-pole a gauge jack sockets, wired as shown on the left and below,. They accept 3-pole 1/4" "A" gauge (TRS) jacks, or 2-pole mono jacks.

The jack socket outputs are as follows:

FX Insert Send, Main Output Insert Send Left, Main Output Insert Send Right, Stereo 2 Left, Stereo 2 Right, Mono1, Mono2, Booth Left, Booth Right and Sound-to-Light.

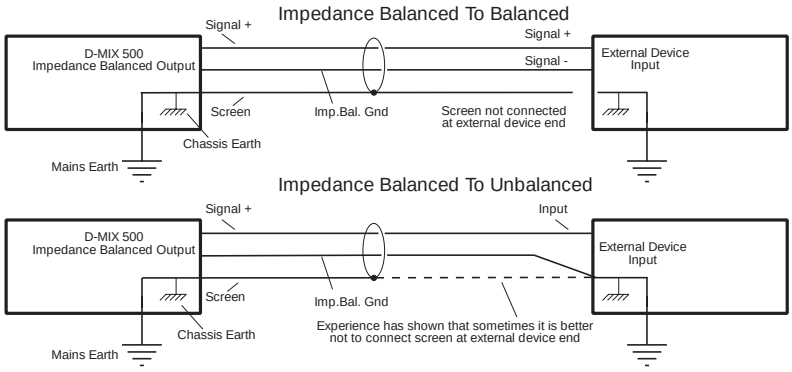

Phono Sockets

The Record Left and Record Right output phone sockets are, of course, both unbalanced outputs. See the diagram below for details of how to connect to an external tape machine.

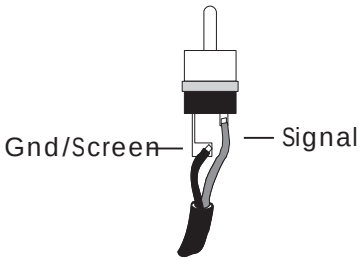

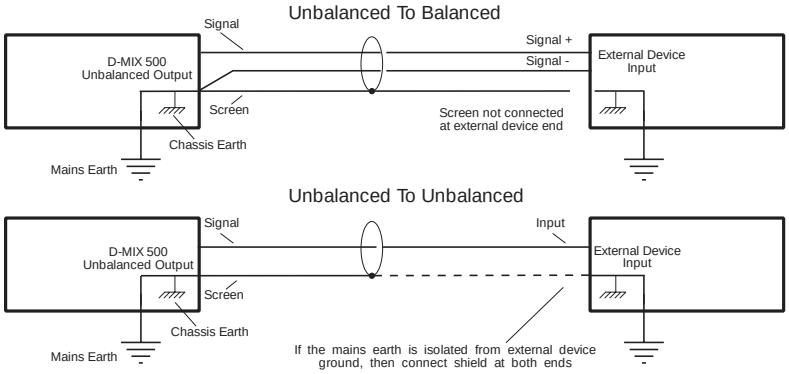

3. System Block Diagram

System Block Diagram

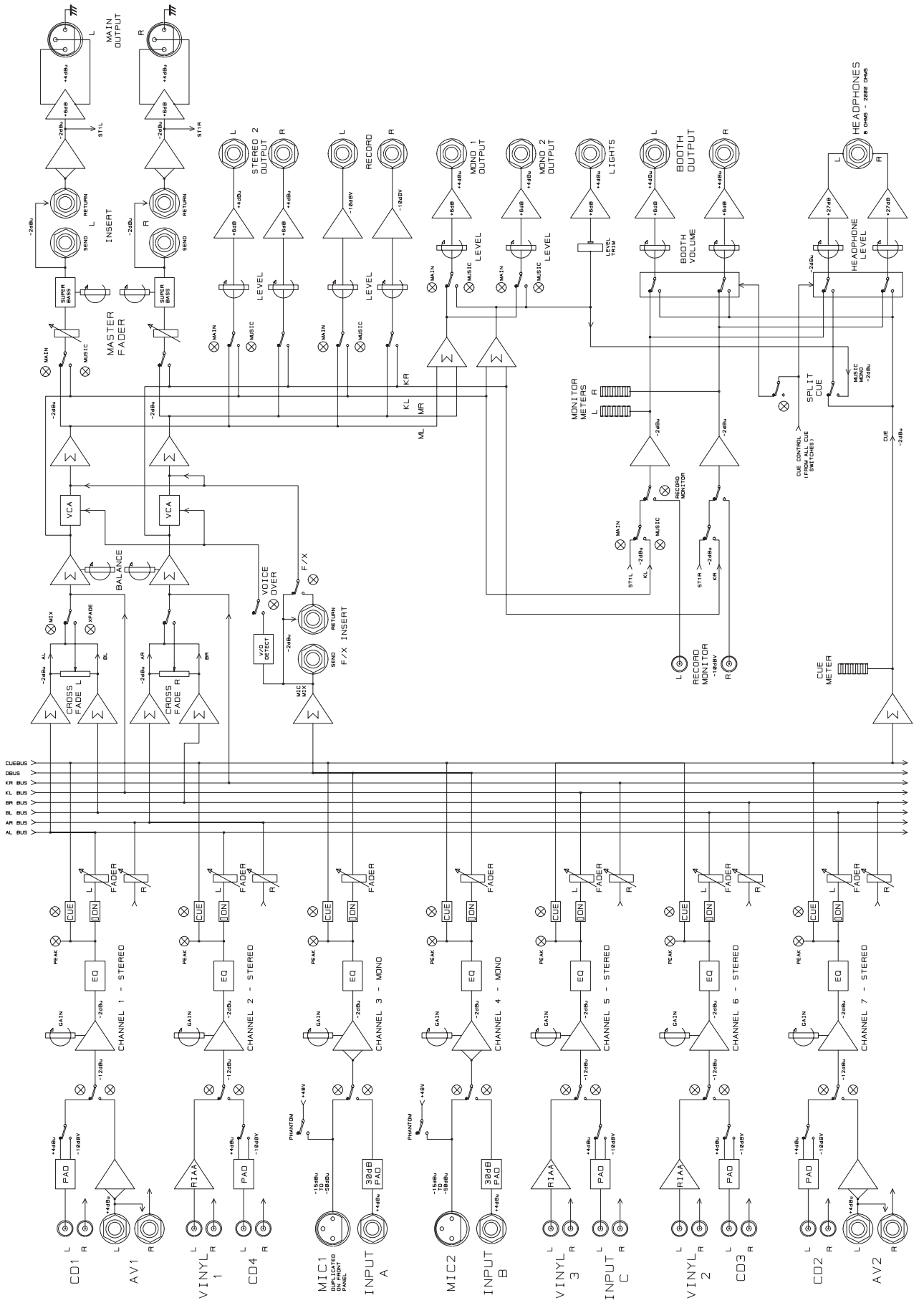

4. Functional Descriptions

Stereo Input Channels 1 & 7 - CD/AV

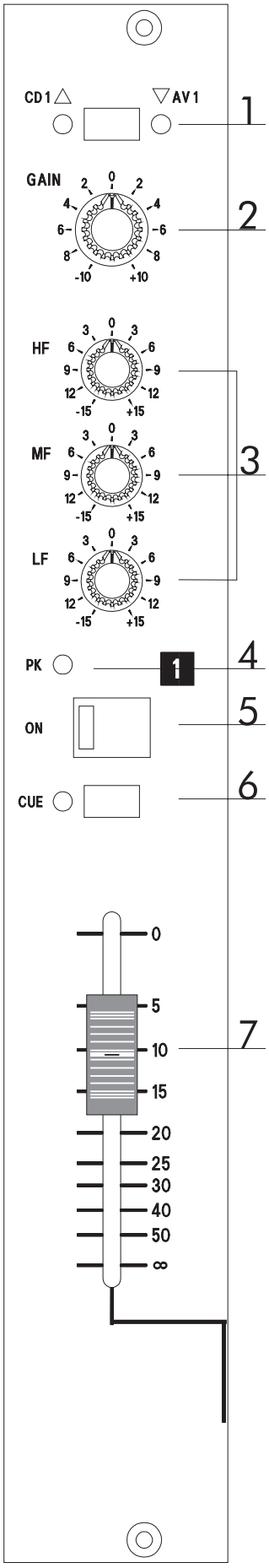

Input Stage

(1) The input switch selects the Input source. When this switch is pressed AV 1(2) has been selected and the LED to the right of the switch lights up orange. When the switch is released a green LED will illuminate thus meaning the CD 1(2) Input source has been selected.

(2) Gain- Adjusts the level of the selected input by +/-10dB, and should be set up carefully to ensure a good signal level to the rest of the mixer. If it is set too high the signal will distort as it overloads the channel and causes clipping. If it is set too low the level of any background hiss will be more noticeable and you may not be able to get enough signal level to the output of the mixer.

Equalisation

(3) The **Equaliser (EQ)** allows precise manipulation of the sound.

Three EQ bands are provided, HF (High Frequency), MF (Mid Frequency) and LF (Low Frequency). These EQ bands provide 15dB of cut and boost at 10kHz, 1kHz and 80Hz respectively on the D-MIX500; 5dB cut and boost at these frequencies on the D-MIX500L.

Channel Output

(4) The **Peak LED** warns the DJ of excessive signal level in the channel 6dB before clipping occurs. The signal is sampled just after the EQ section, and illumination of the LED will indicate that the input sensitivity is set too high, or that the EQ settings are too extreme.

(5) The **Channel ON** switch enables and disables the channel. When the switch is set to the on position an LED will illuminate showing the channel is active.

(6) The **CUE** switch enables the pre-fade channel signal to be routed to the DJ's headphones and booth monitors if required.

(7) The Output signal level from the channel is set by the **Fader**.

THE OUTPUT OF THESE CHANNELS MAY BE ASSIGNED TO THE CROSS FADER.

Channel 1 may be assigned to the left position of the cross fader.

Channel 7 may be assigned to the right position of the cross fader.

Stereo Input Channels 2 & 6 - VINYL/CD

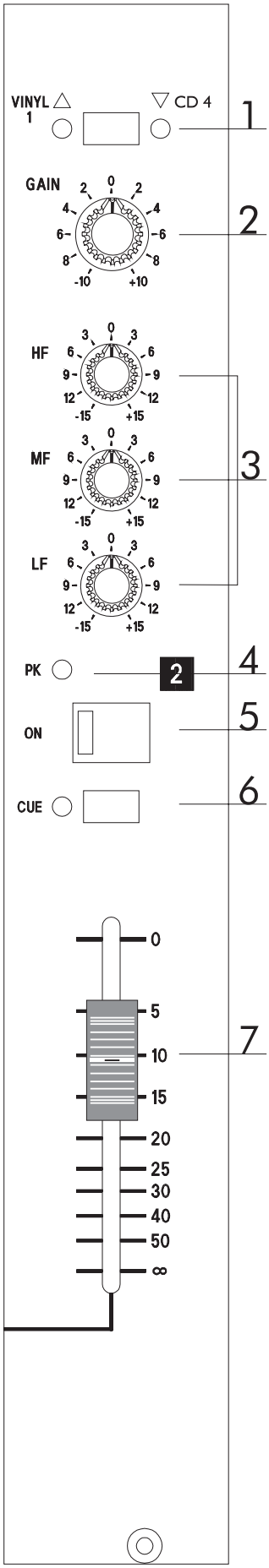

Input Stage

(1) The input switch selects the Input source. When this switch is pressed CD 4(3) has been selected and the LED to the right of the switch lights up orange. When the switch is released a green LED will illuminate thus meaning the VINYL 1(2) input source has been selected.

(2) Gain- Adjusts the level of the selected input by +/-10dB and should be set up carefully to ensure a good signal level to the rest of the mixer. If it is set too high the signal will distort as it overloads the channel and causes clipping. If it is set too low the level of any background hiss will be more noticeable and you may not be able to get enough signal level to the output of the mixer.

Equalisation

(3) The **Equaliser (EQ)** allows precise manipulation of the sound.

Three EQ bands are provided, HF (High Frequency), MF (Mid Frequency) and LF (Low Frequency). These EQ bands provide 15dB of cut and boost at 10kHz, 1kHz and 80Hz respectively on the D-MIX500; 5dB cut and boost at these frequencies on the D-MIX500L.

Channel Output

(4) The **Peak LED** warns the DJ of excessive signal level in the channel 6dB before clipping occurs. The signal is sampled just after the EQ section, and illumination of the LED will indicate that the input sensitivity is set too high, or that the EQ settings are too extreme.

(5) The **Channel ON** switch enables and disables the channel. When the switch is set to the on position a green LED will illuminate showing the channel is active.

(6) The **CUE** switch enables the pre-fade channel signal to be routed to the DJ's headphones and booth monitors if required.

(7) The Output signal level from the channel is set by the **Fader**.

THE OUTPUT OF THESE CHANNELS MAY BE ASSIGNED TO THE CROSS FADER.

Channel 2 may be assigned to the left position of the cross fader.

Channel 6 may be assigned to the right position of the cross fader.

Mono Input Channels 3 & 4 - MIC/LINE Input

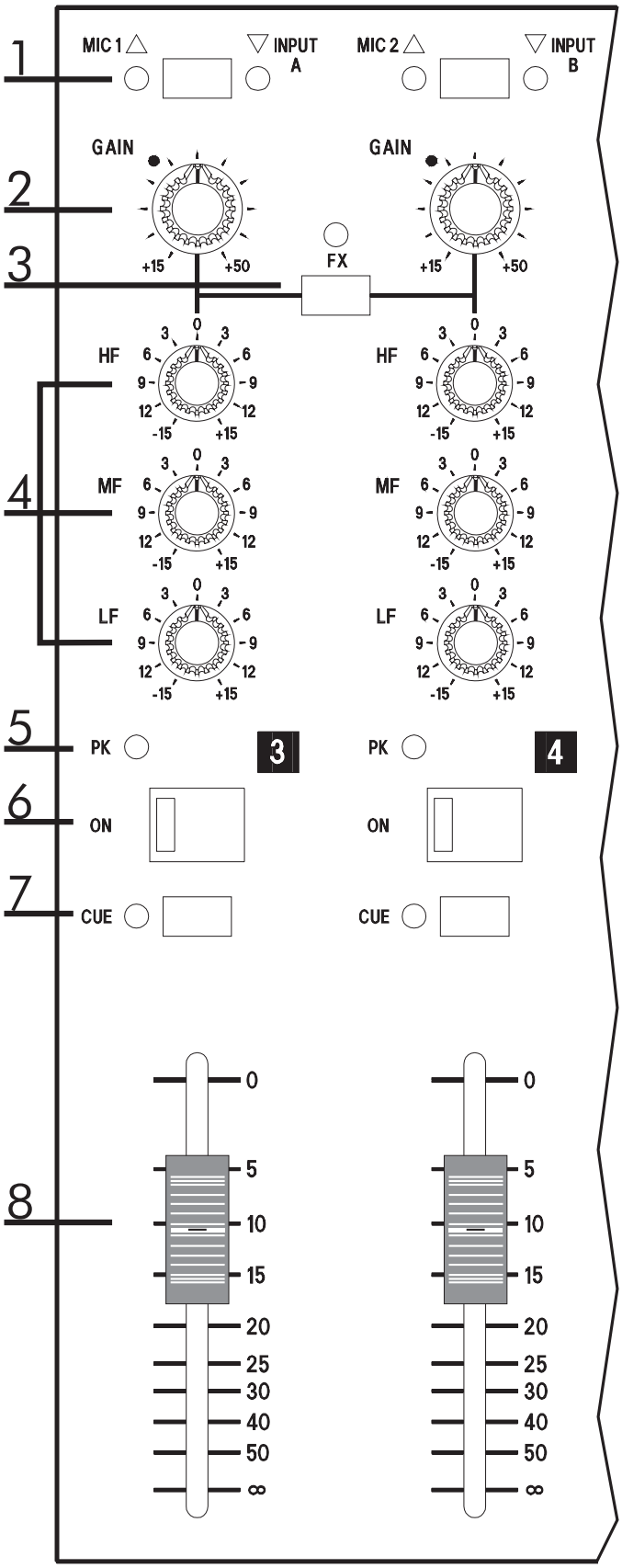

Mono Input Channels 3 & 4 - MIC/LINE Input

Input Stage

(1) The input switch selects the input source. When this switch is pressed INPUT A(B) has been selected and the LED to the right of the switch lights up orange. When the switch is released a green LED will illuminate thus meaning the MIC 1(2) input source has been selected.

(2) Gain- Adjusts the level of the selected input, and should be set up carefully to ensure a good signal level to the rest of the mixer. If it is set too high the signal will distort as it overloads the channel and causes clipping. If it is set too low the level of any background hiss will be more noticeable and you may not be able to get enough signal level to the output of the mixer.

(3) A mix of the outputs of channels 3 and 4 feeds the **FX** INSERT SEND jack on the rear of the console. Here the signal may be run through any kind of processor and back into the console via the **FX** INSERT RETURN jack socket. When the FX switch is pressed, the signal from the RETURN jack is routed to the console Master section.

Make sure the channels you wish to send to FX are ON.

Equalisation

(4) The **Equaliser (EQ)** allows precise manipulation of the sound, particularly to improve the sound of microphone sources where the original sound is often far from ideal.

Three EQ bands are provided, HF (High Frequency), MF (Mid Frequency) and LF (Low Frequency). These EQ bands provide 15dB of cut or boost at 10kHz, 2.5kHz and 160Hz respectively on the D-MIX500; 5dB cut and boost at these frequencies on the D-MIX500L.

Channel Output

(5) The **Peak LED** warns the DJ of excessive signal level in the channel 6dB before clipping occurs. The signal is sampled just after the EQ section, and illumination of the LED will indicate that the input sensitivity is set too high, or that the EQ settings are too extreme.

(6) The **Channel ON** switch enables and disables the channel. When the switch is set to the on position a green LED will illuminate showing the channel is active.

(7) The **CUE** switch enables the pre-fade channel signal to be routed to the DJ's headphones and booth monitors if required.

(8) The Output signal level from the channel is set by the **Fader**.

THE OUTPUT OF THESE CHANNELS CANNOT BE ASSIGNED TO THE CROSS FADER

Stereo Input Channel 5 - VINYL 3/INPUT C

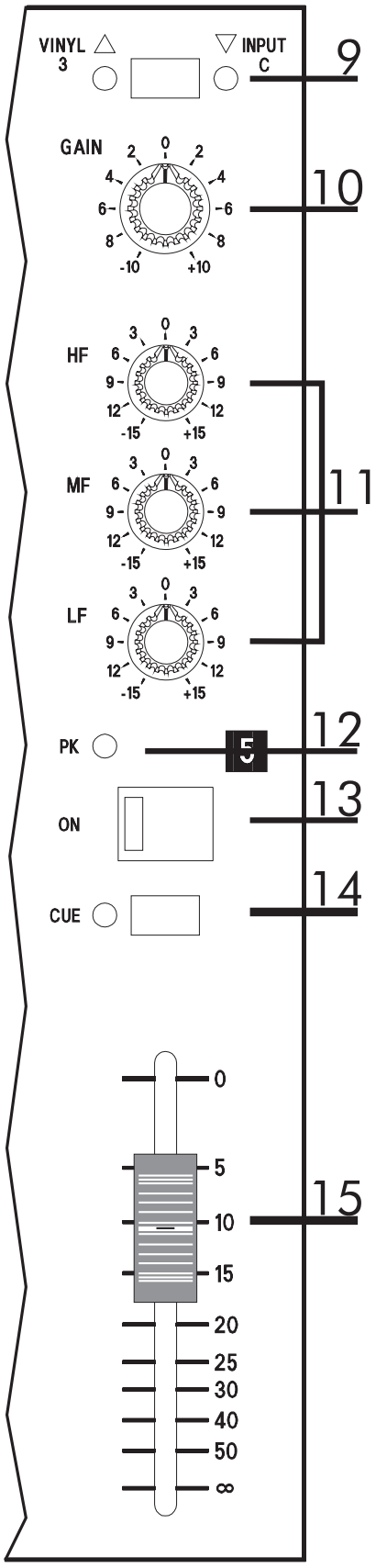

Stereo Input Channel 5 - VINYL 3/INPUT C

Input Stage

(9) The input switch selects the input source. When this switch is pressed INPUT C has been selected and the LED to the right of the switch lights up orange. When the switch is released a green LED will illuminate thus meaning the VINYL 3 Input source has been selected.

(10) Gain- Adjusts the level of the selected input by +/-10dB and should be set up carefully to ensure a good signal level to the rest of the mixer. If it is set too high the signal will distort as it overloads the channel and causes clipping. If it is set too low the level of any background hiss will be more noticeable and you may not be able to get enough signal level to the output of the mixer.

Equalisation

(11) The **Equaliser (EQ)** allows precise manipulation of the sound.

Three EQ bands are provided, HF (High Frequency), MF (Mid Frequency) and LF (Low Frequency). These EQ bands provide 15dB of cut and boost at 10kHz, 1kHz and 80Hz respectively on the D-MIX500; 5dB cut and boost at these frequencies on the D-MIX500L.

Channel Output

(12) The **Peak LED** warns the DJ of excessive signal level in the channel before distortion occurs. The signal is sampled just after the EQ section, and illumination of the LED will indicate that the input sensitivity is set too high, or that the EQ settings are too extreme.

(13) The **Channel ON** switch enables and disables the channel. When the switch is set to the on position a green LED will illuminate showing the channel is active.

(14) The **CUE** switch enables the pre-fade channel signal to be routed to the DJ's headphones and booth monitors if required.

(15) The Output signal level from the channel is set by the **Fader.**

THE OUTPUT OF THIS CHANNEL CANNOT BE ASSIGNED TO THE CROSS FADER

Master Section

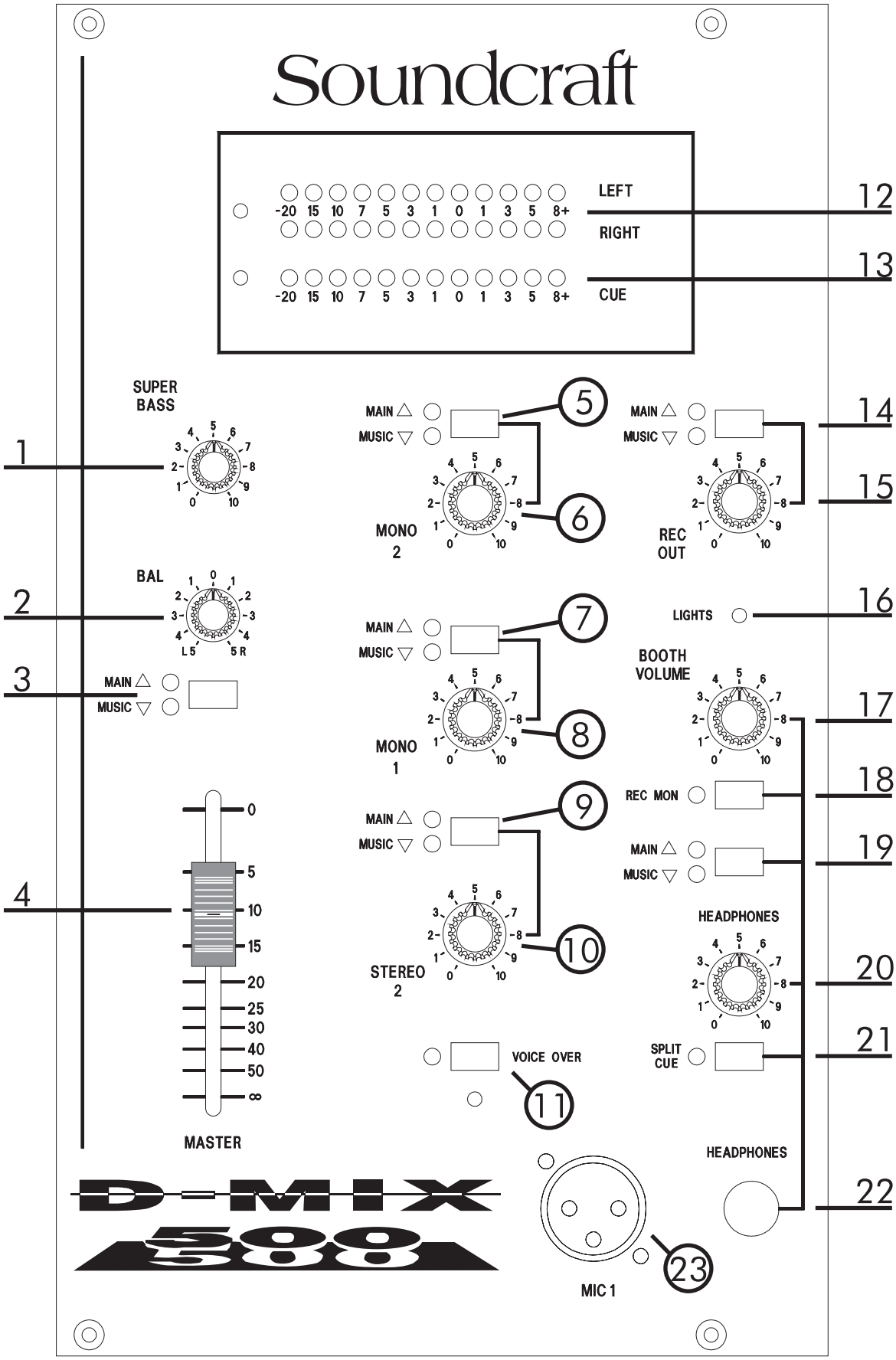

Master Section

Outputs

(1) The **Super Bass** pot controls the amount of bass sent to the main outputs. This rotary fader injects up to +12dB at 63 Hz.

(2) The **Balance** pot provides a level of adjustment left or right, for the signal feeding the main outputs. This allows compensation for imbalance in the source signal.

(3) The **Main/Music** switch is set to Music when the DJ wants to mute the Mic source from the **Main output**. When set to Main the music is mixed with the Mic signals from channels 3 and 4.

(4) The **Master fader** sets the final output level of the main stereo mix.

(5) The **Main/Music** switch is set to Music when the DJ wants to mute the Mic source from the **Mono 2 output**. When set to Main the music is mixed with the Mic signals from channels 3 and 4.

(6) The level of the **Mono 2 output** is set by this rotary fader.

(7) The **Main/Music** switch is set to Music when the DJ wants to mute the Mic source from the **Mono 1 output**. When set to Main the music is mixed with the Mic signals from channels 3 and 4.

(8) The level of the **Mono 1 output** is set by this rotary fader.

(9) The **Main/Music** switch is set to Music when the DJ wants to mute the Mic source from the **Stereo 2 output**. When set to Main the music is mixed with the Mic signals from channels 3 and 4.

(10) The level of the **Stereo 2 output** is set by this rotary fader.

(11) When **Voice Over** is pressed, the Mic signal will activate the ducking system, and when the DJ speaks, the music will be reduced in volume so that the mic source over-rides it. The music level may be adjusted using the trimmer situated below the switch.

(14) The **Main/Music** switch is set to Music when the DJ wants to mute the Mic source from the **Record output**. When set to Main the music is mixed with the Mic signals from channels 3 and 4.

(15) The level of the **Record output** is set by this rotary fader.

(16) The **Lights trimmer** enables the DJ to adjust the level of output to the lights jack.

(17) The level of the **Booth volume** is set by this rotary fader.

(19) The **Main/Music** switch is set to Music when the DJ wants to mute the Mic source from both the **Booth output** and the **Headphones**. When set to Main the music is mixed with the Mic signals from channels 3 and 4.

Metering

(12) The dual bargraph **Output Meter** displays the level of the stereo output. The upper bar displays the left output and the lower bar displays the right output.

(13) A single bargraph **CUE** meter displays the level of the cue mix.

Master Section

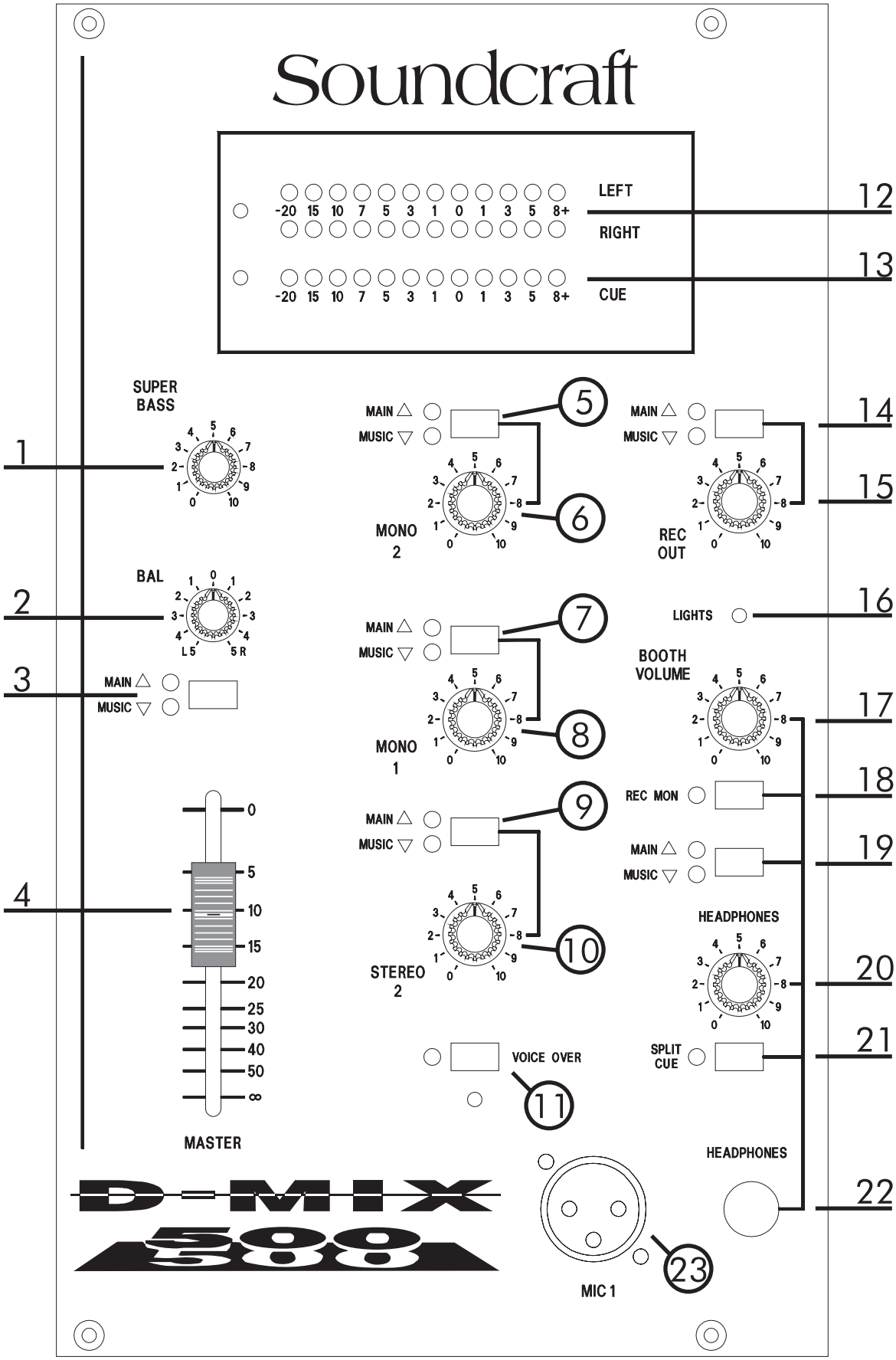

Monitoring

(18) This sends the **Record signal** directly to the headphones for monitoring.

(20) The level of the **DJ's headphones** is set by this rotary fader.

(21) When **Split Cue** is pressed, instead of the normal Headphones output being replaced completely by an active Cue signal, the Cue feed appears in the right earphone and a mono mix of the music feed is heard in the left earphone, giving the DJ continuous monitoring of the mixer output if required. When this function is active the red LED will illuminate. Split Cue disables routing of cue signals to the Booth outputs.

(22) The **Headphones output** is a standard 1/4" 3-pole jack.

Inputs

(23) The **Mic input** is a standard XLR connector. This parallels the MIC 1 XLR on the rear panel. **Do not use both at once.**

Cross Fader

The Cross Fader is shown below. The Cross Fader is fed only by channels 1, 2, 6 and 7.

The Cross fader may be switched in or out of use by the adjacent XFADE/MIX switch.

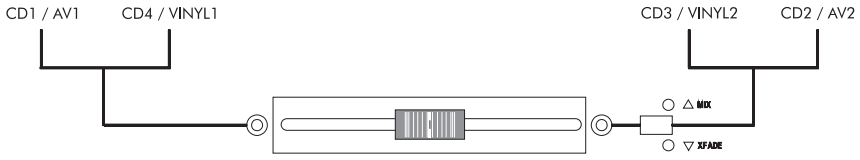

5. Specifications

Typical Specifications

Input levels

CD	660mV/2V, switchable
Input C	+4dBu / -10dB, switchable.
Vinyl	5mV @ 1kHz, RIAA equalised.
Mic	-15dBu to -50dBu, variable.
AV & Input A / B	+4dBu.
Insert return	-2dBu
Record monitor	-10dBV

Input impedances

CD & Input C	Greater than 20k ohms, unbalanced.
Vinyl	47k ohms, unbalanced.
Mic	Greater than 1.5k ohms, balanced.
AV & Input A / B	Greater than 20k ohms, balanced.
Main insert return	Greater than 20k ohms, balanced.
FX insert return	10k ohms, unbalanced.
Record monitor	10k ohms, unbalanced.

Output levels

Main output	+4dBu nominal, +26dBu max.
Insert sends	-2dBu nominal, +20dBu max.
Record	-10dBV nominal, +12dBV max.
Headphones	0dBu max into 8 ohms. +20dBu max into 600 ohms.
Other outputs	+4dBu nominal, +20dBu max.

Output impedances

Main output	75 ohms, balanced, max load 5k ohms.
Headphones	Less than 50 ohms, unbalanced.
Other outputs	150 ohms, impedance balanced, max load 2k ohms.

Frequency response

Line inputs	+0, -1dB, 20Hz - 20kHz
Mic inputs	+0, -3dB, 20Hz - 20kHz

Distortion

CD to Main output	Less than 0.05% @ 1kHz. @+4dBu

Input noise (20Hz - 20kHz unweighted)

Mic (Max Gain)	Less than -126dBu with 150 ohm source.
Line inputs	Less than -80dBu.