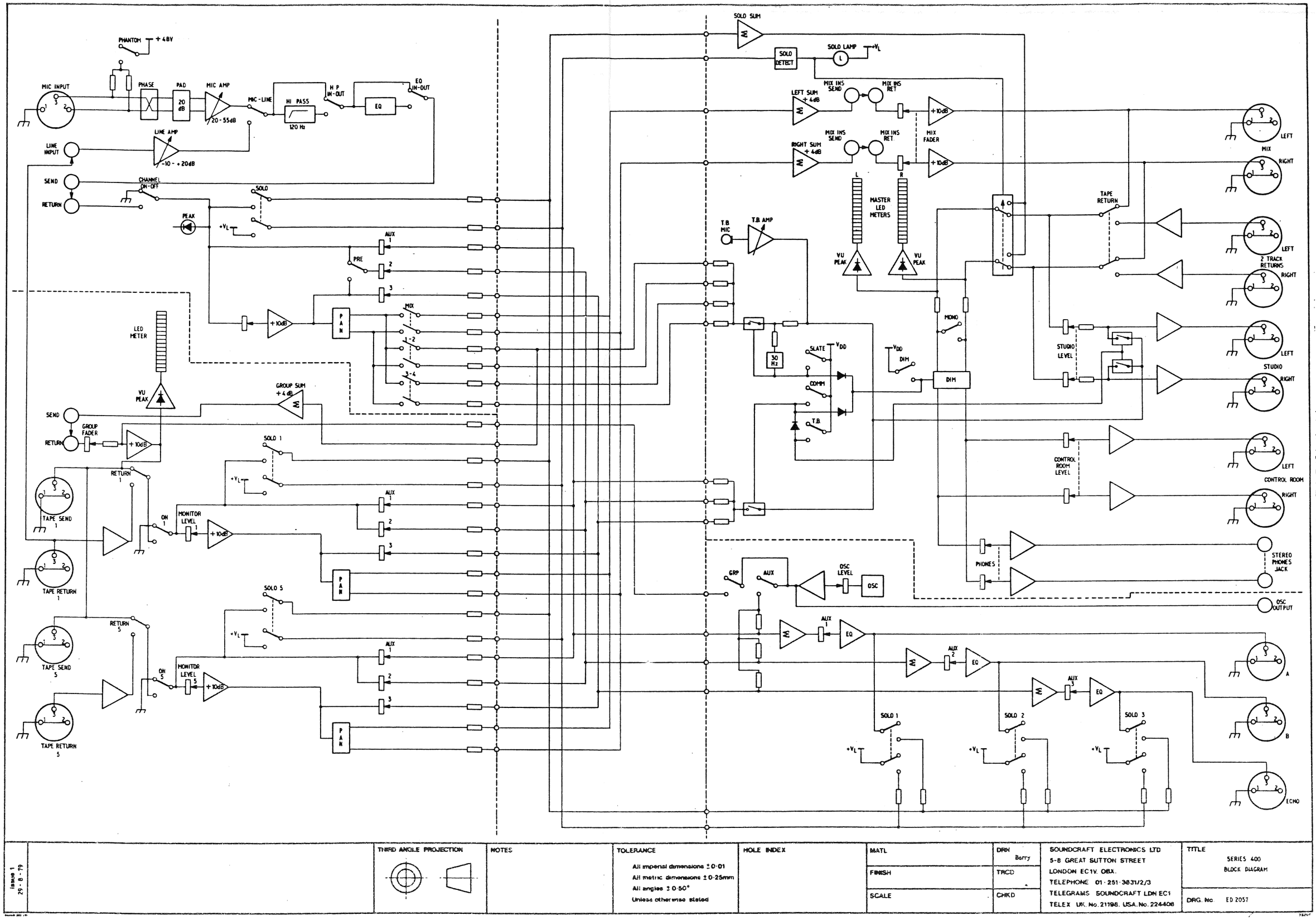

issue 1 29 - 8 - 79		THIRD ANGLE PROJECTION	NOTES	TOLERANCE All imperial dimensions ±0·01 All metric dimensions ±0·25mm All angles ±0·50° Unless otherwise stated	HOLE INDEX	MATL	DRN Barry	SOUNDCRAFT ELECTRONICS LTD 5-8 GREAT SUTTON STREET LONDON EC1V. 0BX. TELEPHONE 01·251·3831/2/3 TELEGRAMS SOUNDCRAFT LDN EC1 TELEX UK. No. 21198. USA. No. 224408	TITLE SERIES 400 BLOCK DIAGRAM
						FINISH	TRCD		
						SCALE	CHKD		DRG. No. ED 2057

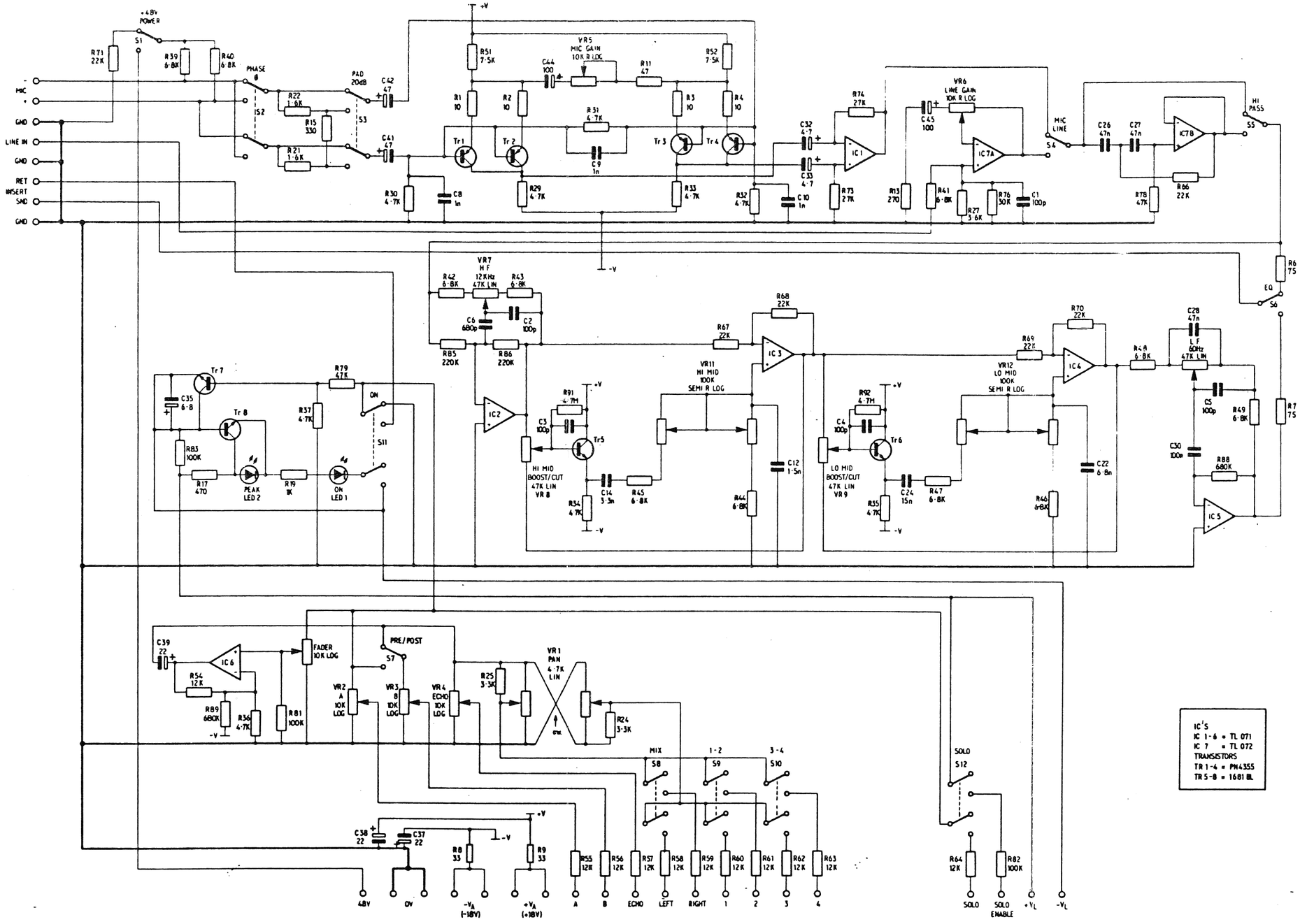

IC's
IC 1-6 = TL 071
IC 7 = TL 072
TRANSISTORS
TR 1-4 = PN4355
TR 5-8 = 1681 BL

Issue 1 1-6-79	THIRD ANGLE PROJECTION	NOTES: RESISTORS IN OHMS. CAPACITORS IN MICRO FARADS UNLESS OTHERWISE STATED. FOR PART No. GF0504	TOLERANCE: All imperial dimensions ±0·01; All metric dimensions ±0·25mm; All angles ±0·80°; Unless otherwise stated	HOLE INDEX	MATL —	DRN Barry	SOUNDCRAFT ELECTRONICS LTD 5-8 GREAT SUTTON STREET LONDON EC1V. 0BX. TELEPHONE. 01·251·3631/2/3 TELEGRAMS SOUNDCRAFT LDN EC1 TELEX. UK. No. 21198. USA. No. 224408	TITLE SERIES 400 INPUT CIRCUIT DIAGRAM SC 1129 ISS 6
ISSUE 5 21-3-80					FINISH —	TRCD		
ISSUE 6 7-7-80					SCALE —	CHKD		DRG. No. ED2051
ISSUE 7 16-11-81								

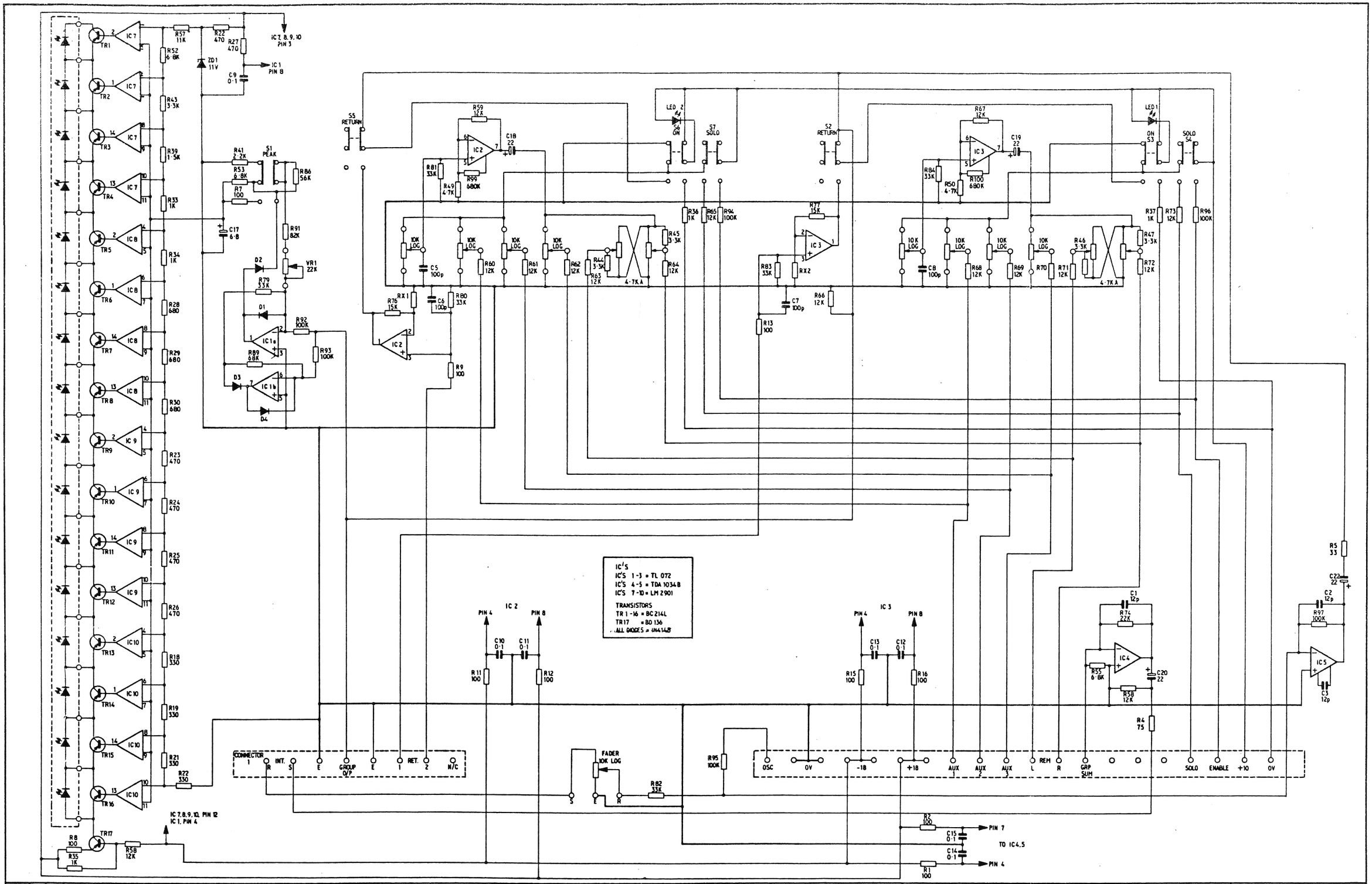

Issue 1 26-7-79 ISSUE 5 21-5-80 ISSUE 5 13-11-81	THIRD ANGLE PROJECTION	NOTES CAPACITORS IN MICRO FARADS RESISTORS IN OHMS UNLESS OTHERWISE STATED. FOR PART Nos. GE 0411	TOLERANCE All imperial dimensions ±0·01 All metric dimensions ±0·25mm All angles ±0·50° Unless otherwise stated	HOLE INDEX	MATL FINISH SCALE	DRN Barry TRCD CHKD	SOUNDCRAFT ELECTRONICS LTD 5-8 GREAT SUTTON STREET LONDON EC1V. OBX. TELEPHONE. 01·251·3631/2/3 TELEGRAMS. SOUNDCRAFT LDN EC1 TELEX. UK. No. 21198. USA. No. 224408	TITLE SERIES 400 OUTPUT PCB CIRCUIT DIAGRAM PCB No. SC1130 ISS.5 DRG. No. ED 2054

SC1138 LED ASSY

IC 9, 10, 11, 12 PIN 3

IC 7 PIN 8

IC 7 PIN 4
IC 9, 10, 11, 12 PIN 12

STUDIO

C/ROOM

PHONES

VR2 10K LOG

VR3 10K LOG

VR4 10K LOG

S1 PEAK

S2 REPLAY

S3 MONO

S4 DIM

RIGHT PHONE (TIP)

LEFT PHONE (RING)

SC1135 COMMS BOARD

SLATE

COMM

T.B.

T.B. VOL VR5 10K R.LOG

SOLO LAMP

CONNECTOR 1
EARTH | R C.ROOM L | R STUDIO L | R REPLAY L | 48V | P | P1

CONNECTOR 2
+48 | 0V | 0V | -18 | -18 | +18 | +18 | 1 AUX | 2 AUX | 3 | L REMIX R | 1 | 2 GROUP | 3 | 4 | SOLO | ENABLE | +10 | 0V

IC'S
IC'S 1-4 = TDA1034B
IC'S 5-6 = TL071
IC'S 7-8 = TL072
IC'S 9-12 = LM2901
IC'S 13-14 = CD4016

TRANSISTORS
TR 1-16 = BC214L
TR 17 = BD136
TR 19-22 = 1681BL
TR 24-25 = A842GR
ALL DIODES = IN4148

Issue 1 25-7-79 ISSUE 4 21-5-80	THIRD ANGLE PROJECTION	NOTES CAPACITORS IN MICRO FARADS RESISTORS IN OHMS UNLESS OTHERWISE STATED FOR PART No. GD0323	TOLERANCE All imperial dimensions ±0·01 All metric dimensions ±0·25mm All angles ±0·50° Unless otherwise stated	HOLE INDEX	MATL FINISH SCALE	DRN Barry TRCD CHKD	SOUNDCRAFT ELECTRONICS LTD 5-8 GREAT SUTTON STREET LONDON EC1V. OBX. TELEPHONE. 01·251·3631/2/3 TELEGRAMS. SOUNDCRAFT LDN EC1 TELEX. UK. No. 21198. USA. No. 224408	TITLE SERIES 400 MONITOR MAIN PCB CIRCUIT DIAGRAM PCB. No SCT131 DRG. No. ED 2052

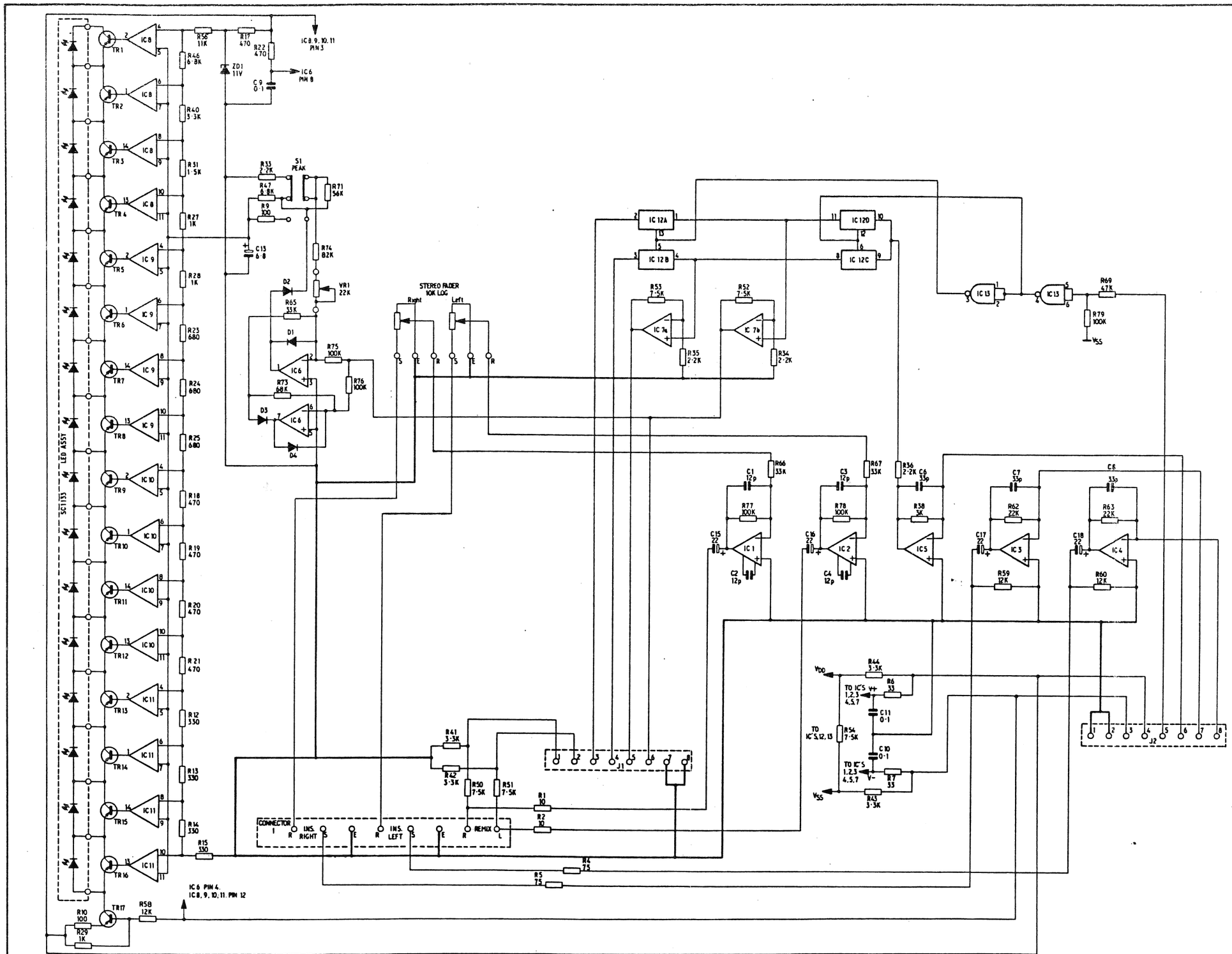

Issue 1 26-7-79 ISSUE 2 ISSUE 3 19-5-80 ISSUE 4 16-11-81	THIRD ANGLE PROJECTION	NOTES RESISTORS IN OHMS CAPACITORS IN MICRO FARADS UNLESS OTHERWISE STATED. FOR PART No. GC 0241	TOLERANCE All imperial dimensions ±0·01 All metric dimensions ±0·25mm All angles ±0·50° Unless otherwise stated	HOLE INDEX	MATL FINISH SCALE	DRN Barry TRCD CHKD	SOUNDCRAFT ELECTRONICS LTD 5-8 GREAT SUTTON STREET LONDON EC1V. 0BX. TELEPHONE. 01·251·3631/2/3 TELEGRAMS. SOUNDCRAFT LDN EC1 TELEX. UK. No. 21198. USA. No. 224408	TITLE SERIES 400 PCB No. SC1134 MONITOR SUB PCB CIRCUIT DIAGRAM DRG. No. ED 2053

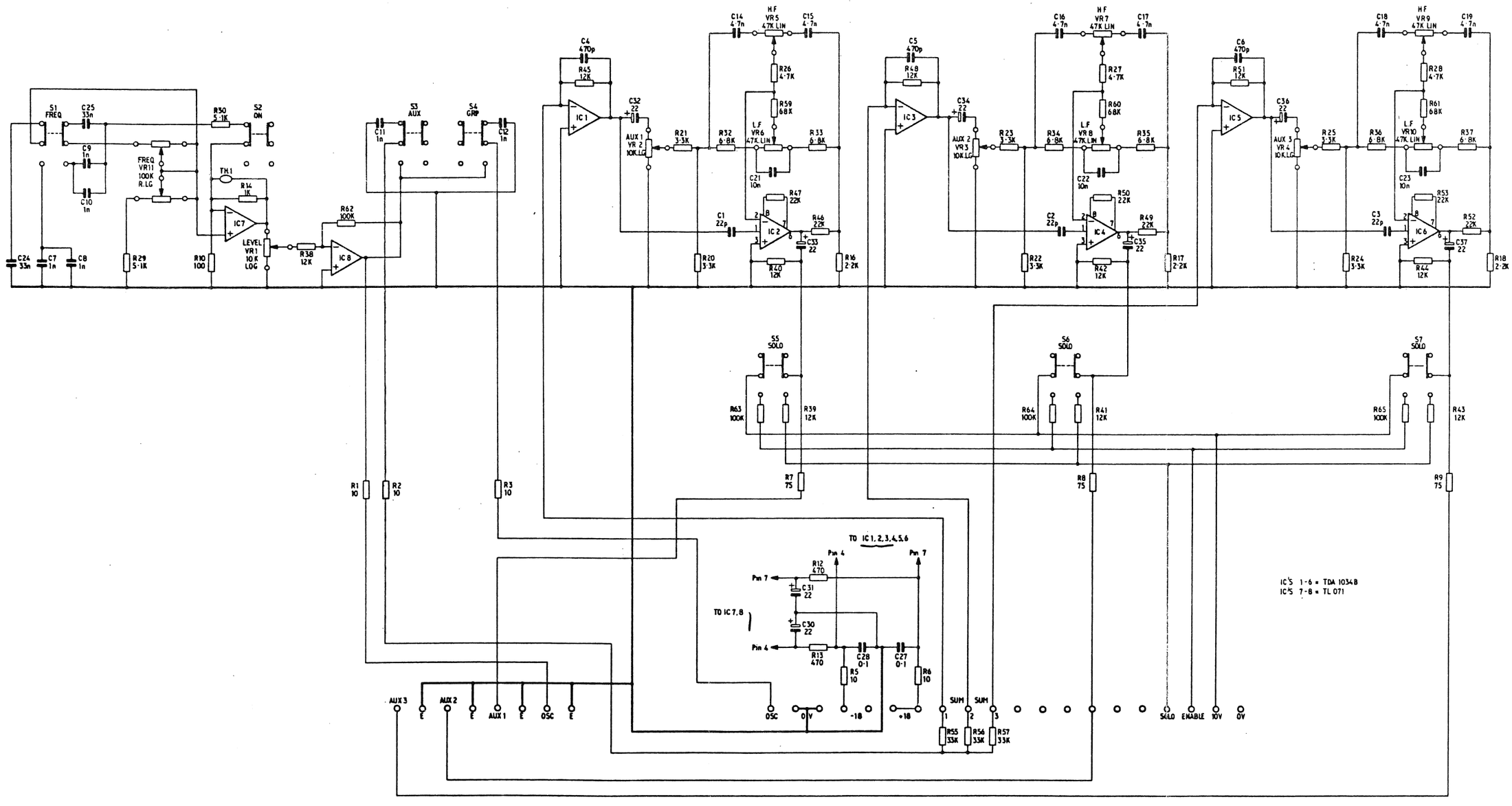

Issue 1 24-8-79 / ISSUE 2 / ISSUE 3 19-5-80	THIRD ANGLE PROJECTION	NOTES: Resistors in ohms; Capacitors in micro farads; Unless otherwise stated FOR PART No. GC 0240	TOLERANCE: All imperial dimensions ±0·01; All metric dimensions ±0·25mm; All angles ±0·50°; Unless otherwise stated	HOLE INDEX	MATL / FINISH / SCALE	DRN Barry / TRCD / CHKD	SOUNDCRAFT ELECTRONICS LTD 5-8 GREAT SUTTON STREET LONDON EC1V. OBX. TELEPHONE. 01·251·3631/2/3 TELEGRAMS. SOUNDCRAFT LDN EC1 TELEX. UK. No. 21198. USA. No. 224408	TITLE: SERIES 400 CUE MASTER CIRCUIT DIAGRAM. PCB No SC1132 / DRG. No. ED 2055

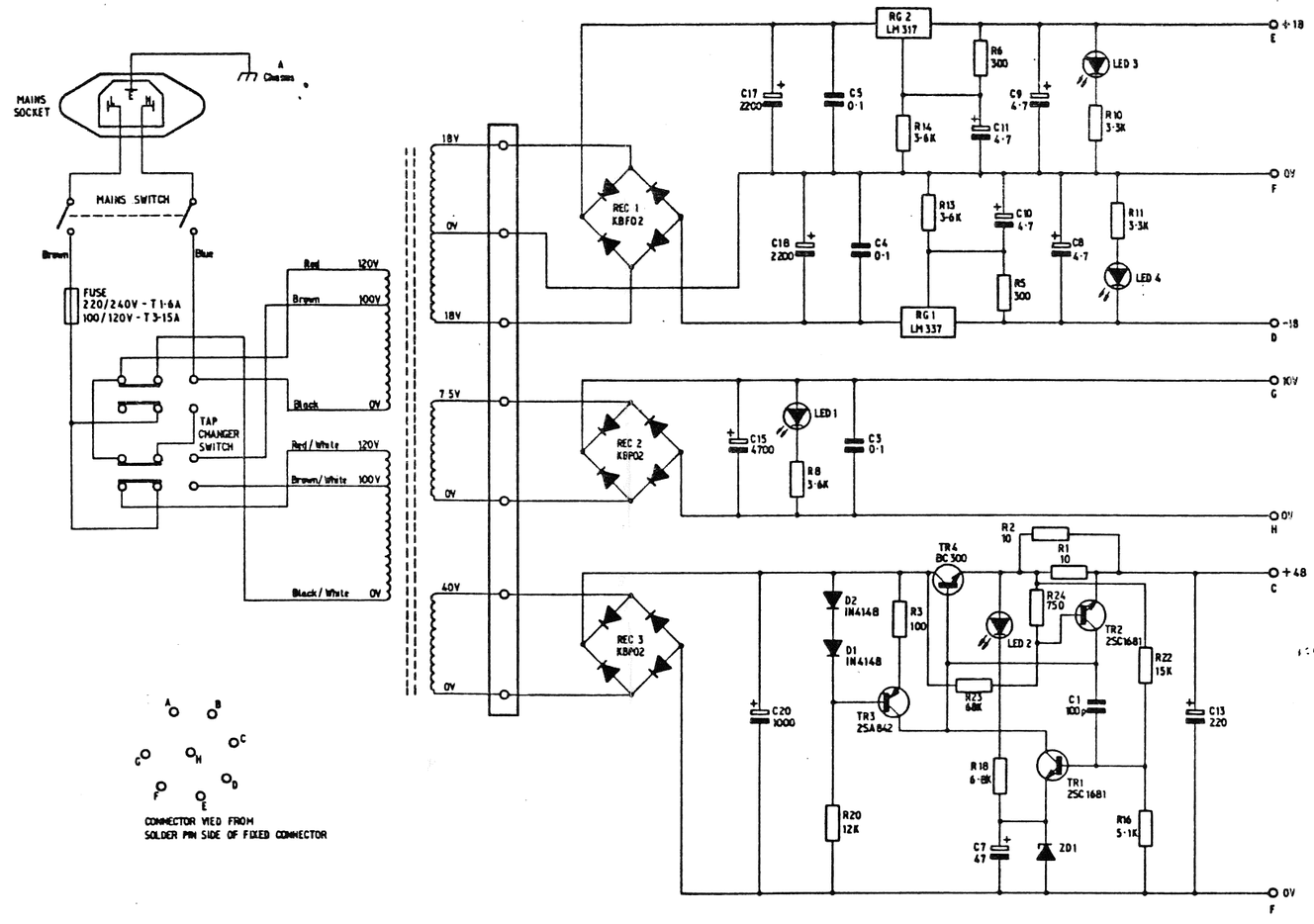

Issue 1 5-9-79	ISSUE 2 21-5-80	ISSUE 3 30-5-80	ISSUE 4 23-9-81	ISSUE 5 15-10-81

THIRD ANGLE PROJECTION

NOTES
Resistors in ohms
Capacitors in micro farads
Unless otherwise stated
FOR PART NO 6C0242

TOLERANCE
All imperial dimensions ± 0·01
All metric dimensions ± 0·25mm
All angles ± 0·50°
Unless otherwise stated

HOLE INDEX

MATL	—
FINISH	—
SCALE	—
DRN	Barry
TRCD	
CHKD	

SOUNDCRAFT ELECTRONICS LTD
5-8 GREAT SUTTON STREET
LONDON EC1V. 0BX.
TELEPHONE. 01·251·3631/2/3
TELEGRAMS. SOUNDCRAFT LDN EC1
TELEX. UK. No. 21198. USA. No. 224408

TITLE
SERIES 400
POWER SUPPLY CIRCUIT DIAGRAM
PCB No. SC1128

DRG. No. ED 2058