YAMAHA

CLUB Series SPEAKER SYSTEMS

SERVICE MANUAL

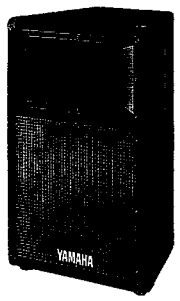

S112Ⅳ

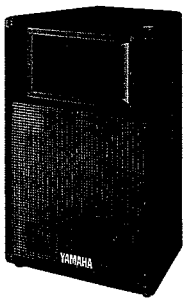

S115Ⅳ

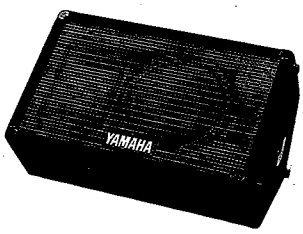

SM10Ⅳ

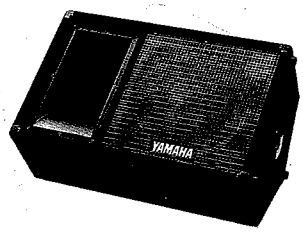

SM12Ⅳ

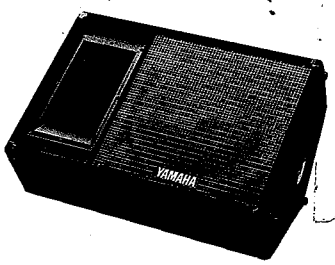

SM15Ⅳ

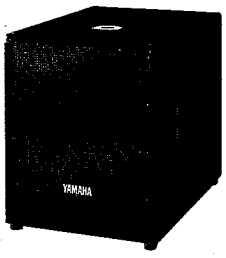

SW118Ⅳ

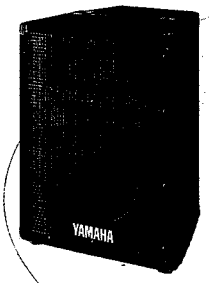

SV10

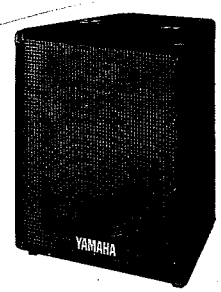

SV12

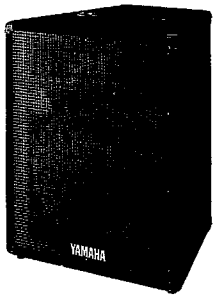

SV15

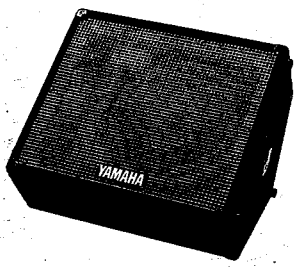

SV12M

■ **CONTENTS** (目次)

SPECIFICATIONS(総合仕様) 2/3
DIMENSIONS (寸法図) 4
SCHEMATIC DIAGRAMS&CIRCUIT BOARDS
(回路図とシート基板図) 5
PARTS LIST

PA 011377

19971020-58000-S112Ⅳ 19971020-65000-SM12Ⅳ
19971020-68000-S115Ⅳ 19971020-75000-SM15Ⅳ
19971020-60000-SM10Ⅳ 19971020-78000-SW118Ⅳ

YAMAHA CORP.
HAMAMATSU, JAPAN
1.94K-841 D&H Printed in Japan '97.9

IMPORTANT NOTICE

This manual has been provided for the use of authorized Yamaha Retailers and their service personnel. It has been assumed that basic service procedures inherent to the industry, and more specifically Yamaha Products, are already known and understood by the users, and have therefore not been restated.

WARNING: Failure to follow appropriate service and safety procedures when servicing this product may result in personal injury, destruction of expensive components and failure of the product to perform as specified. For these reasons, we advise all Yamaha product owners that all service required should be performed by an authorized Yamaha Retailer or the appointed service representative.

IMPORTANT: This presentation or sale of this manual to any individual or firm does not constitute authorization, certification, recognition of any applicable technical capabilities, or establish a principal-agent relationship of any form.

The data provided is belived to be accurate and applicable to the unit(s) indicated on the cover. The research engineering, and service departments of Yamaha are continually striving to improve Yamaha products. Modifications are, therefore, inevitable and changes in specification are subject to change without notice or obligation to retrofit. Should any discrepancy appear to exist, please contact the distributor's Service Division.

WARNING: Static discharges can destroy expensive components. Discharge any static electricity you body may have accumulated by grounding yourself to the ground buss in the unit (heavy gauge black wires connect to this buss.)

IMPORTANT: Turn the unit OFF during disassembly and parts replacement. Recheck all work before you apply power to the unit.

WARNING: CHEMICAL CONTENT NOTICE!

The solder used in the production of this product contains LEAD. In addition, other electrical/electronic and/or plastic (where applicable) components may also contain traces of chemicals found by the California Health and Welfare Agency (and possibly other entities) to cause cancer and/or birth defects or other reproductive harm.

DO NOT PLACE SOLDER, ELECTRICAL/ELECTRONIC OR PLASTIC COMPONENTS IN YOUR MOUTH FOR ANY REASON WHAT SO EVER!

Avoid prolonged, unprotected contact between solder and your skin! When soldering, do not inhale solder fumes or expose eyes to solder/flux vapor!

If you come in contact with solder or components located inside the enclosure of this product, wash your hands before handling food.

■ SPECIFICATIONS (総合仕様)

Model		SM10IV	S112IV/SM12IV	S115IV/SM15IV
Enclosure		Bass reflex type		
Speaker Unit	LF	10" cone	12" cone	15" cone
	HF	1" driver	2" driver	
Frequency Response		70 Hz to 20 kHz	60 Hz to 16 kHz	55 Hz to 16 kHz
Power Capacity	NOISE	100 W	150 W	250 W
	PGM	200 W	300 W	500 W
	MAX	400 W	600 W	1000 W
Nominal Impedance		8Ω		
Sensitivity		95 dB SPL (1W, 1m)	97 dB SPL (1W, 1m)	99 dB SPL (1W, 1m)
Nominal Dispersion	Horizontal	60°	90°	
	Vertical	40°		
Crossover Frequency		1.8 kHz	2 kHz	1.7 kHz
Input Connectors		1/4" phone jack x 2 (parallel input)		
Dimensions (W x H x D)		SM10IV: 560 x 339 x 277 mm	S112IV: 400 x 638 x 318 mm SM12IV: 643 x 402 x 344 mm	S115IV: 475 x 712 x 362 mm SM15IV: 720 x 485 x 345 mm
Weight		SM10IV: 12.2 kg	S112IV: 19.3 kg, SM12IV: 19.5 kg	S115IV: 27.5 kg, SM15IV: 26 kg

Model		SV10	SV12/SV12M	SV15
Enclosure		Bass reflex type		
Speaker Unit	LF	10" cone	12" cone	15" cone
	HF	Piezo horn (TWEETER)		
Frequency Response		70 Hz to 20 kHz	60 Hz to 20 kHz	50 Hz to 20 kHz
Power Capacity	NOISE	75 W	100 W	
	PGM	150 W	200 W	
	MAX	300 W	400 W	
Nominal Impedance		8Ω		
Sensitivity		95 dB SPL (1W, 1m)	97 dB SPL (1W, 1m)	98 dB SPL (1W, 1m)
Input Connectors		1/4" phone jack x 2 (parallel input)		
Dimensions (W x H x D)		400 x 517 x 328 mm	SV12: 445 x 525 x 372 mm SV12M: 525 x 445 x 315 mm	510 x 628 x 455 mm
Weight		13.3 kg	SV12: 14.8 kg SV12M: 13.5 kg	22 kg

Model		SW118IV
Enclosure		Bass reflex type
Speaker Unit		18" cone
Frequency Response		30 Hz to 2 kHz
Power Capacity	NOISE	250 W
	PGM	500 W
	MAX	1000 W
Nominal Impedance		8Ω
Sensitivity		96 dB SPL (1W, 1m)
Recommended Crossover Frequency		90 Hz, 12 dB/octave
Input Connectors		1/4" phone jack x 2 (parallel input)
Dimensions (W x H x D)		542 x 654 x 791 mm
Weight		32.4 kg

ネットワーク なし

YM 広島 近藤 様

品番		SM10IV	S112IV/SM12IV	S115IV/SM15IV
エンクロージャー		バスレフ型		
スピーカーユニット	LF	10"コーン	12"コーン	15"コーン
	HF	1"ドライバー	2"ドライバー	
再生周波数帯域		70Hz～20kHz	60Hz～16kHz	55Hz～16kHz
許容入力	NOISE	100W	150W	250W
	PGM	200W	300W	500W
	MAX	400W	600W	1000W
公称インピーダンス		8Ω		
出力音圧レベル		95dB SPL (1W、1m)	97dB SPL (1W、1m)	99dB SPL (1W、1m)
公称指向角度	水平	60°	90°	
	垂直	40°		
クロスオーバー周波数		1.8kHz	2kHz	1.7kHz
入力端子		フォンジャック×2		
最大外形寸法(W×H×D)		SM10IV：560×339×277 mm	S112IV：400×638×318 mm SM12IV：643×402×344 mm	S115IV：475×712×362 mm SM15IV：720×485×345 mm
重量		SM10IV： 12.2 kg	S112IV：19.3 kg、SM12IV：19.5 kg	S115IV：27.5 kg、SM15IV：26 kg

品番		SW118IV
エンクロージャー		バスレフ型
スピーカーユニット		18"コーン
再生周波数帯域		30Hz～2kHz
許容入力	NOISE	250W
	PGM	500W
	MAX	1000W
公称インピーダンス		8Ω
出力音圧レベル		96dB SPL (1W、1m)
推奨クロスオーバー周波数		90Hz、12dB/oct.
入力端子		フォンジャック×2
最大外形寸法(W×H×D)		542×654×791 mm
重量		32.4 kg

■ DIMENSIONS (寸法図)

S112Ⅳ
S115Ⅳ

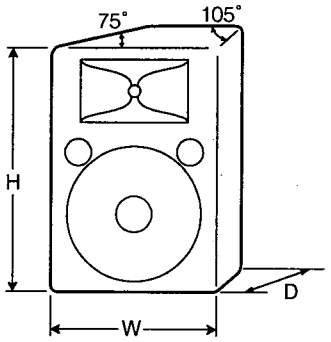

S112Ⅳ(W×H×D) : 400×638×318
S115Ⅳ(W×H×D) : 475×712×362

SM10Ⅳ
SM12Ⅳ
SM15Ⅳ

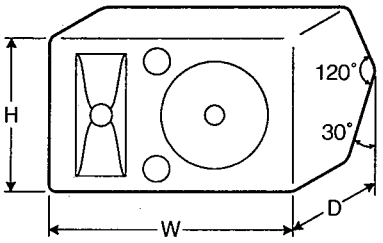

SM10Ⅳ(W×H×D) : 560×339×277
SM12Ⅳ(W×H×D) : 643×402×344
SM15Ⅳ(W×H×D) : 720×485×345

SV10, SV12, SV15

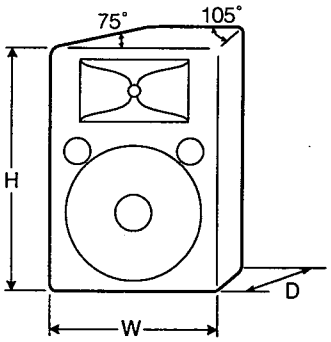

SV10(W×H×D) : 400×517×328
SV12(W×H×D) : 445×525×372
SV15(W×H×D) : 510×628×455

SV12M

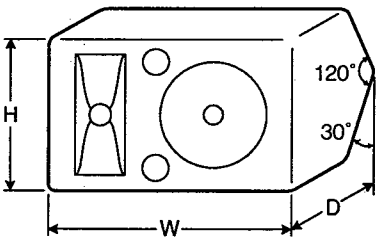

SV12M(W×H×D) : 525×445×315

SW118Ⅳ

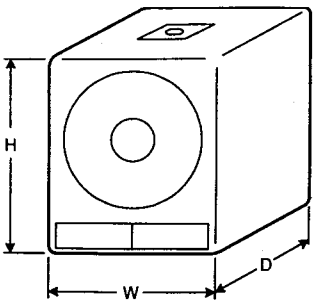

SV118Ⅳ(W×H×D) : 542×654×791

Unit (単位) : mm