ORDER NO. SD7505-1019

Service Manual

Player

SL-1500



SPECIFICATIONS

(TURNTABLE SECTION)

Type .....Manual Player system
Drive method .....Direct drive
Motor .....Ultra-low-speed brushless DC motor
Turntable platter .....Aluminum die-cast, 33 cm (13") diameter
Turntable speeds .....33-1/3 and 45 r.p.m.
Speed change method .....Electronic
Variable pitch controls .....Individual control knobs, 10% adjustment range
Wow and flutter .....0.03% (W.R.M.S.)
Rumble ..... −50 dB (DIN-A), −70 dB (DIN-B)

(GENERAL)

Power supply ..... ~120 V, 50 or 60 Hz
Power consumption .....5 W
Dimensions .....45.3 × 36.6 × 13.9 cm (W × D × H) (17-3/4 × 14-3/8 × 5-1/2 inches)
Weight .....7.8 kg (17.2 lb)

(TONEARM SECTION)

Type .....Universal "S" shaped tubular arm, static-balanced type, direct reading stylus pressure adjustment, with anti-skating force control device, and cueing device
Effective length .....230 mm (9-1/16")
Overhang .....15 mm (19/32")
Tracking error angle .....Within +3° (at the point 150 mm (5-1/8") from the center) +1° (at the point 55 mm (2-3/16") from the center)
Offset angle .....21.5°
Adjustable stylus pressure .....0 to 3 g
Cartridge weight rangee ...5 to 11 g
Head shell weight .....9.5 g

(Specifications, design and other details are subject to change, without prior notice, at any time in order to improve performance)

Technics
by Panasonic

Matsushita Electric Corp. of America
50 Meadowlands Parkway, Secacus, N.J. 07094

Matsushita Electric of Hawaii, Inc.
320 Waiakamilo Road, Honolulu, HaWaii 96817

Matsushita Electric of Canada Ltd.
40 Ronson Drive Rexdale, Ont

Downloaded from www.Manualslib.com manuals search engine

technicscatalogus.com

SCHEMATIC DIAGRAM SL-1500

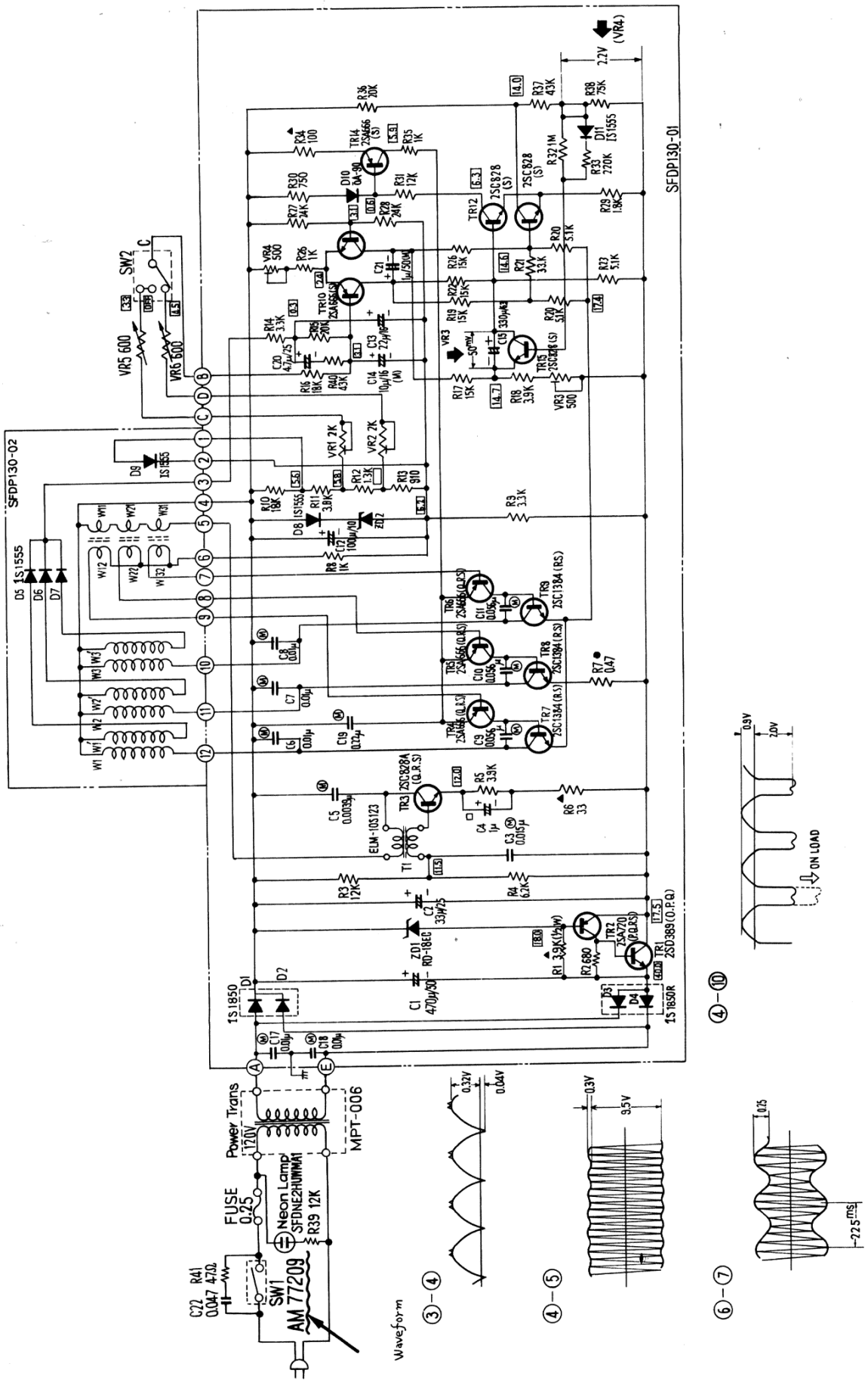

1

Downloaded from www.Manualslib.com manuals search engine
technicscatalogus.com

CIRCUIT BOARD

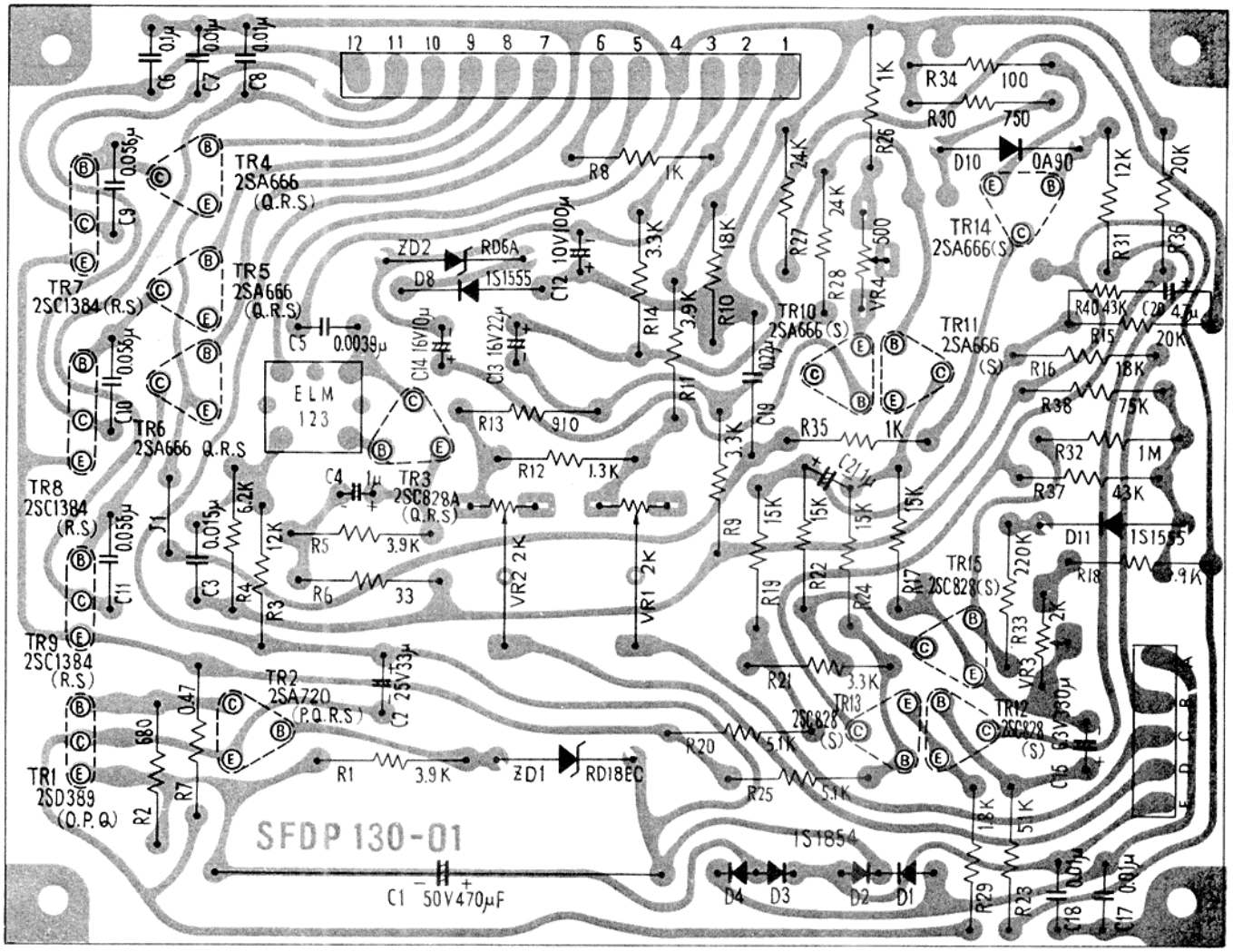

Circuit Plate

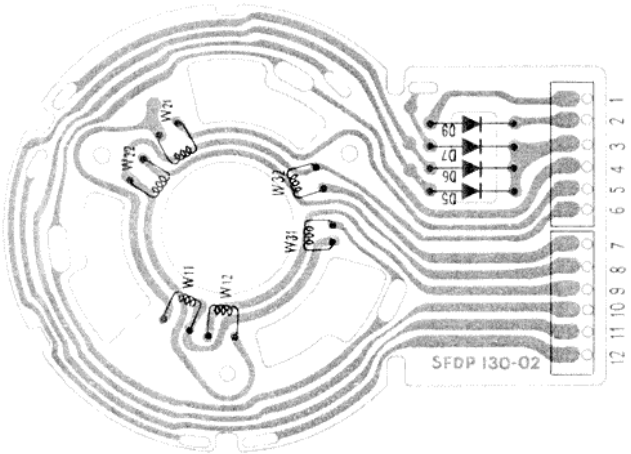

Motor

Downloaded from www.Manualslib.com manuals search engine
technicscatalogus.com

TROUBLE SHOOTING GUIDE

* Except when checking voltage, disconnect the power cord before repair without fail.

TROUBLE	CAUSE	REMEDY
Turntable Speed A. Switching on does not cause turntable to rotate.	Remove back cover and, using DC voltmeter, check printed base voltage: 1. No output of constant-voltage circuit (between Tr1 collector and 4) is found. (1) No output on secondary of transformer. * Cord disconnected. * Soldered improperly. Fuse disconnected. * Power transformer defective. (2) Output found on secondary of transformer. * Constant-voltage circuit parts (ZD1), Tr1, Tr2) defective. 2. Output of constant-voltage circuit is 17~20V. * 3-phase switching circuit (Tr4 ~ Tr9), oscillator circuit (Tr3) defective. Tr14 defective. 3. Power Switch is not ON. * Micro switch defective. 4. Speed selector switch defective. * Contact faulty * Soldered improperly.	 * Replace cord. * Solder securely. * Replace fuse. * Replace power transformer. * Replace printed base assembly. * Replace printed base assembly. * Replace micro switch. * Replace speed selector switch. * Solder securely.
B. Turntable speed too fast.	1. Constant-voltage output is not 17~20V. * Constant-voltage circuit parts (ZD1, Tr1, Tr2) defective. 2. Constant-voltage output is 17V~20V. * Diodes D8, D9, ZD2 defective. * Diodes D5, D6, D7 shorted. * Speed maladjusted.	 * Replace printed base assembly. * Replace printed base assembly. * Replace motor. (Stater frame Ass'y). * Adjust semi-fixed resistor VR1 & VR2.
C. Turntable speed too slow.	1. Constant-voltage output is not 17~20V. * Constant-voltage parts (ZD1, Tr1, Tr2, defective.) 2. Constant-voltage output is 17~20V. * Diodes D8, D9, ZD2 defective. * Speed unadjusted.	 * Replace printed base assembly. * Replace printed base assembly. * Adjust semi-fixed resistor VR1 & VR2.
D. Turntable speed varies too much.	* Trouble in 3-phase switching circuit.	* Replace printed base assembly.
E. Turntable, after stopped by hand, will not turn or starts turning but will stop soon.	* 3-phase switching circuit defective.	* Replace printed base assembly.
F. Operative at only one of two speeds. (33-1/3 rpm, 45 rom)	* Selector switch defective. * Lead disconnected or unsoldered. * Contact of Vr1, Vr2 insufficient.	* Replace selector switch. * Replace lead, or solder securely. * Replace printed base assembly.
G. When actuating, turntable speed is unsteadly for along time.	* Semi-fixed resistor VR3 & VR4 unadjusted.	* Make it become 50mV at both ends of C15 with semi-fixed resistor VR3. * Make it become 2.2V at both ends of R38 with semi-fixed resistor VR4.
Noise Offensive noise is hears.	* Power transformer makes loud noise of vibration. * Broken part of rotor magnet of iron chips attracted by magnet and rubbed by motor case.	* Replace power transformer. * Remove iron chips.

Downloaded from www.Manualslib.com manuals search engine
technicscatalogus.com

ADJUSTMENT INSTRUCTION

❶SPEED ADJUSTMENT (with pitch control knobs) (See Fig. 1)

*The speed is already adjusted accurately in the factory.

*If, for any reason, you wish to readjust the speed, turn these pitch control knobs to "+" direction or "−" direction.

"+" direction .....This incroeases the speed of the turntable platter.
Turn the knob to "+" direction if the strobo dots seem to be "falling back"; ie., seem to be moving counterclockwise.
When the strobo dots appear to be stationary, the speed is accurate.

"−" direction .....This decreases the speed of the turntable platter.
Turn the knob to "−" direction if the strobo dots seem to be "running ahead"; ie., seem to be moving clockwise, until they appear stationary.

*Each of the two turntable speeds (33-1/3 and 45 r.p.m.) can be adjusted within a range of 10%.

NOTE

*If there is a change in the incoming power-line frequency used for strobo neon-lamp indication, the strobo dots may then begin to move, although very slightly.
Though commercial electrical power is widely thought to be very stable with respect to frequency, if precisely measured over a period of time, there will be observed slight changes which amount to an average of 0.2%. This will cause the strobo dots to move.
This, of course, will never spoil sound reproduction in the least, as the turntable revolution is still stable.
Note that the cause of the apparent motion is the fact that the turntable's speed is more static then power-line frequency, and independent of it.

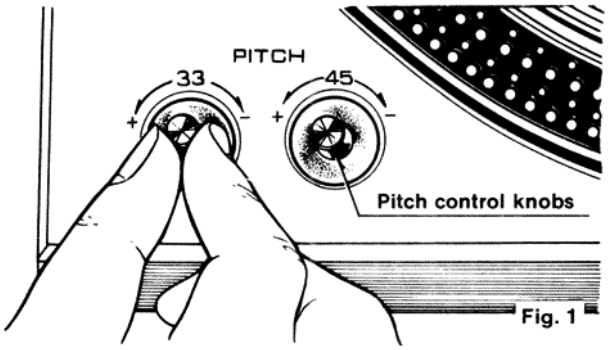

Fig. 1

❷SPEED ADJUSTMENT (with speed adjustment screws) (See Fig. 2)

*If, for any reason, the adjustment cannot be successfully made by the pitch control konbs, turn these screws clockwise or counterclockwise with screwdriver.

Clockwise .....The rotation of the turntable platter will be slowed down.

Counterclockwise .....The rotation will be speeded up.

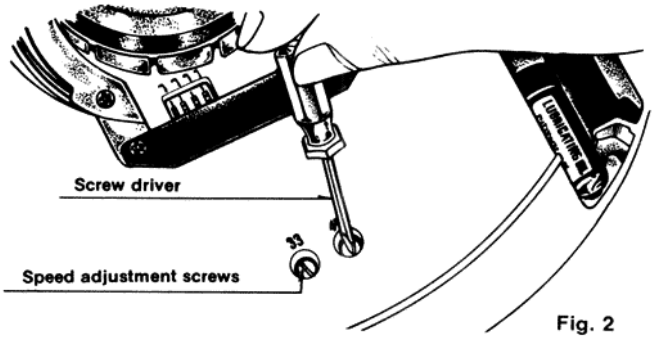

Fig. 2

❸ADJUSTMENT OF THE ARM LIFT HEIGHT

*The interval (the space between the stylus tip and record surface when the cueing lever is raised) of this tonearm has been adjusted from 5 to 10 mm (3-16" to 25/64").

*If, for any reason, the range is too narrow of wide, turn the adjustment screw clockwise or counterclockwise pushing the arm lift. (See Fig. 3 and 4)

NOTE

*This screw has hexagonal head shape, so be sure to push the arm lift when you turn this screw.

Clockwise .....The space will be narrower.

Counterclockwise .....The space will be wider.

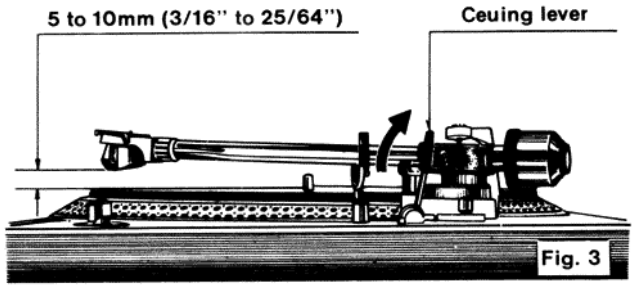

Fig. 3

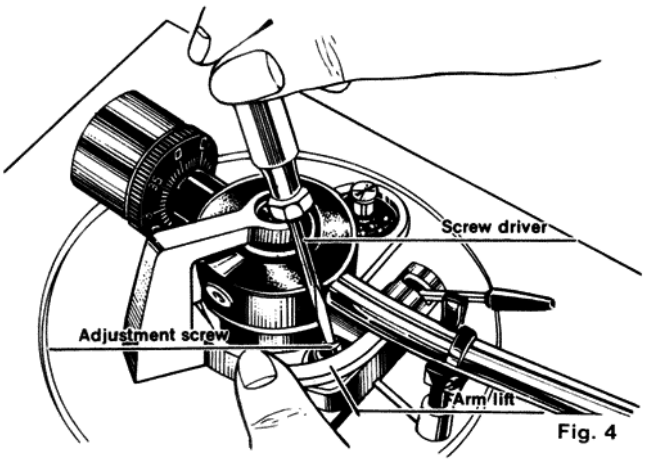

Fig. 4

❹INSTALLATION OF THE CARTRIDGE

*Insert the head shell into the gauge. (See Fig. 5)

*Loosen overhang adjustment screw and move the cartridge forward or backward until the stylus tip lines up with the edge of the gauge.

*Tighten adjustment screw without moving the cartridge.

NOTE

*This position is the stylus for lowest tracking error and minimum distortion.

*This gauge is exclusively designed for this the tonearm.

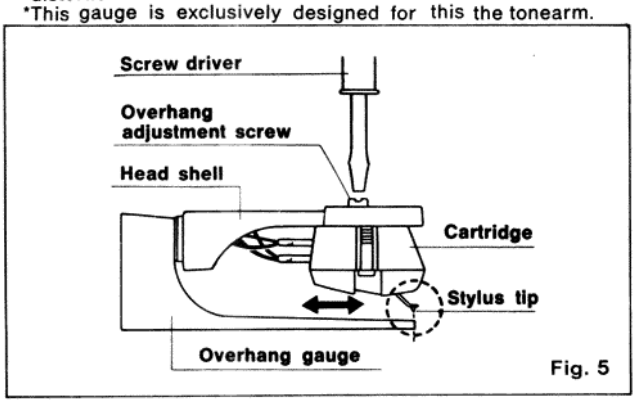

Fig. 5

Downloaded from www.Manualslib.com manuals search engine
technicscatalogus.com

EXPLODED VIEW OF DIRECT DRIVE PLAYER

MODEL SL-1500

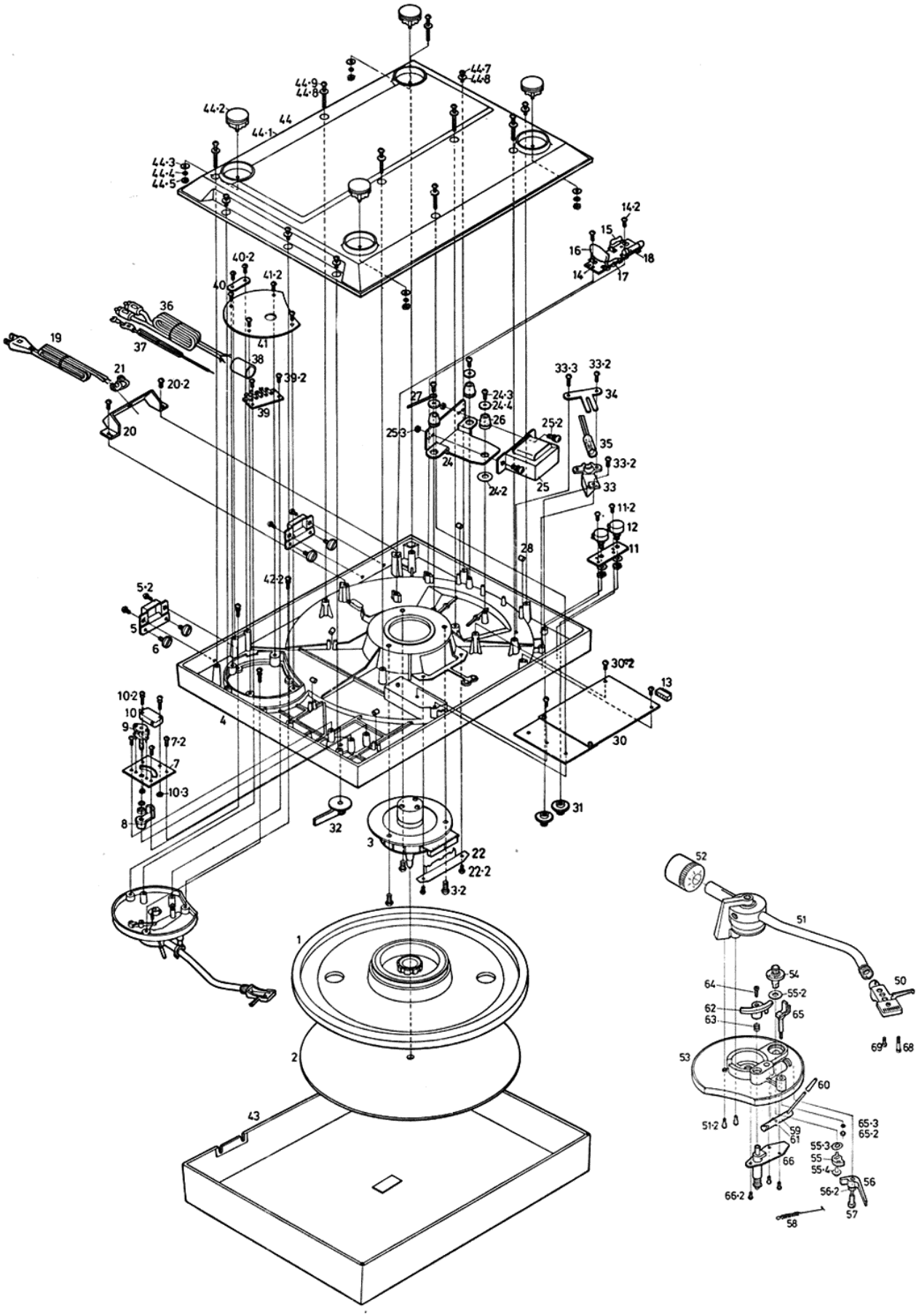

5

Downloaded from www.Manualslib.com manuals search engine

technicscatalogus.com

PARTS LIST

Ref. No.	Part No.	Description	Per Set (Pcs.)	Remarks
1	SFTE150-01A	Turntable platter	1	O
2	SFTG120-01	Turntable mat	1	
3	SFMZ150-01Z	Starter frame assembly	1	O
3-2	XTN4+8BFU	Screw for stater frame	3	
4	SFAC150M01	Player case	1	O
5	SFAT150-01A	Hinge assembly	2	O
5-2	XTV3+8BFZ	Screw for hinge assembly	4	
6	SFXG020L01	Screw for hinge assembly	4	
7	SFUP150-01	Switch plate	1	O
7-2	XTN3+8BFU	Screw for switch plate	3	O
8	SFUM150-01	Switch cam	1	
9	ESRE113K30C	Rotary switch	1	O
10	AM77209	Micro switch	1	
10-2	XYN3+C16FUS	Screw for micro switch	2	
10-3	XNG3HFUS	Nut for micro switch	2	
11	SFUP150-02	Mounting plate for variable resistor	1	O
11-2	XTN3+8BFU	Screw for mounting plate	2	
12	EVHB0AK15B62	Variable resistor	2	
13	SFDJ12805S	5-pin connector	1	
14	SFER110X04E	Terminal strip	1	
14-2	XTN3+8BFU	Screw for terminal strip	2	
15	ERG1ANJ123	Carbon film resistor	1	
16	ECQM6473MZ	Capacitor	1	
17	ERD12TJ4R7	Carbon resistor	1	
18	XBAS2B0201	Fuse	1	
19	SPT-1	AC power cord	1	
20	SFUP130-04	Mounting plate for AC power cord	1	
20-2	XTN3+8BFU	Screw for mounting plate	2	
21	SFHK040L	Bushing for AC power cord	1	
22	SFUP130-06	Print base cover	1	
22-2	XTN3+6BFU	Screw for print base	2	
24	SFUP130-03	Mounting plate for transformer	1	
24-2	SFXW120-02	Washer for mounting plate	3	
24-3	XTN3+8BFU	Screw for mounting plate	3	
24-4	SFXW750-01	Washer for mounting plate	3	
25	MPT-006	Transformer	1	
25-2	XYN4+C8FUS	Screw for transformer	2	
25-3	XNG4HFUS	Nut for transformer	2	
26	SFGC827M01	Cushion rubber for transformer	3	
27	SHE36	Cord holder	1	
28	SFGZ120-02	Clamping rubber for leadwires	5	
30	SFDP130-01A	Circuit plate assembly	1	
30-2	XTN3+8BFU	Screw for circuit plate	3	
31	SFKT130-01A	Variable pitch control knob	2	
32	SFKT150-01A	Start lever	1	O
33	SFUM130-01	Neon lamp base	1	
33-2	XTN3+8BFU	Screw for neon lamp	2	
33-3	XTN3+6BFU	Screw for neon lamp	1	
34	SFUP150-03	Neon lamp holder	1	O
35	SFDN150-01A	Neon lamp assembly	1	O
36	SFDH028-01	Phono cable	1	
37	SFEL028-01E	Ground wire	1	
38	SFGT028-01	Cord clamper for phono cable	1	
39	SFER130-01	Terminal strip for phono cable	1	
39-2	XTN3+6BFU	Screw for terminal strip	2	
40	SFUP150-04	Clamper for AC power cord	1	O
40-2	XTN3+8BFU	Screw for clamper	2	
41	SFUP150-05	Shield cover	1	O
41-2	XTN3+8BFU	Screw for shield cover	4	
42-2	XTN3+8BFU	Screw for tone arm assembly	3	
43	SFAD150M01A	Dust cover assembly	1	O
44	SFAU150-01A	Bottom cover assembly	1	O
44-2	SFUZ150-01A	Audio insulator assembly	4	
44-3	SFXW022-1	Washer for audio insulator	4	
44-4	XWA3BF	Spring washer for audio insulator	4	
44-5	XNG3HFUS	Nut for audio insulator	4	
44-7	XTN3+33BFZ	Screw for bottom cover	7	
44-8	SFXW120-01	Washer for bottom cover	12	
44-9	XTN3+10BFZ	Screw for bottom cover	5	
50	SFPCC13001K	Head shell assembly	1	
51	SFPAM15001K	Arm unit assembly	1	O
51-2	XYN3+C12FU	Screw for arm base	2	
52	SFPWG15001K	Balance weight assembly	1	O
53	SFPKD15001	Arm base	1	O
54	SFPJK13001K	Anti-skating force control knob	1	
55	SFPJK13002	Canceler cam A	1	
55-2	SFPEW1100	Washer for canceler cam	1	
55-3	SFUPWR005	Washer for canceler cam	1	
55-4	XTW26+5DFU	Screw for canceler cam	1	
56	SFPJK13003	Canceler cam B	1	
56-2	SFXW551D2	Washer for canceler cam B	1	
57	SFPJK15002	Cam shaft	1	O
58	SFPSP13001	Spring for canceler	1	
59	SFPJL13007K	Cueing lever assembly	1	
60	SFPAB12002	Knob for cueing lever	1	
61	SFPGM13001	Cueing rubber	1	
62	SFPRT13003K	Arm lift	1	
63	SFQA829-03	Spring for arm lift	1	
64	SFXG829-1	Screw for adjustment of arm lift height	1	
65	SFPRT22001K	Arm rest	1	
65-2	XNG26EBN	Nut for arm rest	1	
65-3	XWA26BFU	Spring washer for arm rest	1	
66	SFPAB13008K	Arm lift base assembly	1	
66-2	XTN3+5BFU	Screw for arm lift base	3	
68	SFCZV8800	Screw for cartridge	2	
69	SFPEV7800	Screw for cartridge	2	

ACCESSORY PARTS

A1	SFWE154A1	45 r.p.m adaptor	1	
A2	SFWO010	Oil	1	
A3	SFKO135-01E	Overhang gauge	1	
A4	SFNU150M01	Printed Matter (for U.S.A)	1	O
A5	SFNU150C01	Printed Matter (for Canada)	1	O

PACKING MATERIALS

P1	SFHP150M01	Inside packing case	1	O
P2	SFHH130-04	Side pad (Front)	1	
P3	SFHH130-05	Side pad (Rear)	1	
P4	SFHH130-03	Accessory box	1	
P5	SFHD135-01	Magnet cover	1	
P6	SFHK100-1	Pad, tone arm	1	

Downloaded from www.Manualslib.com manuals search engine
technicscatalogus.com

COMPONENT PACKING PROCEDURE

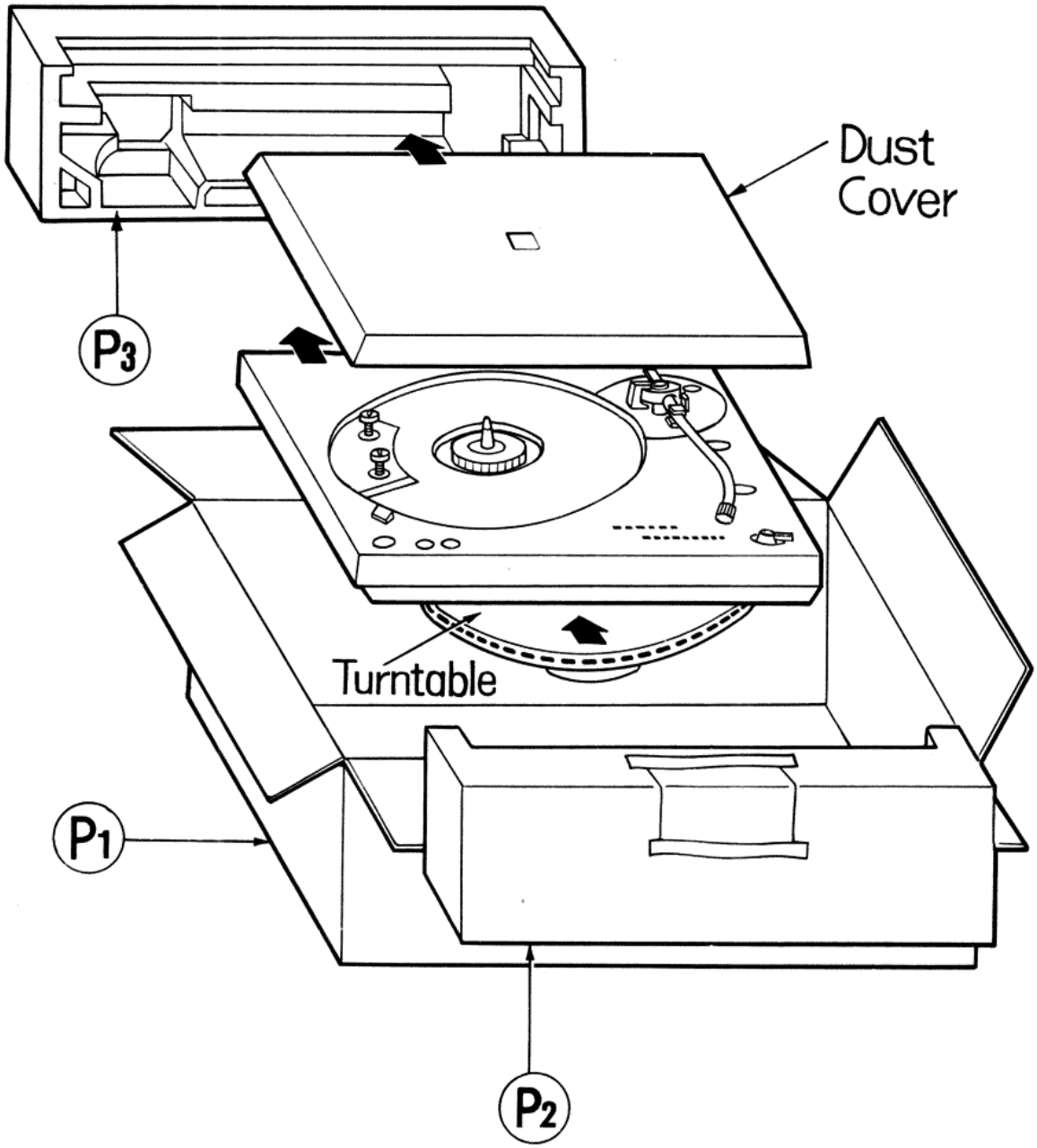

Downloaded from www.Manualslib.com manuals search engine

technicscatalogus.com