ORDER NO. MB9902001C2

Service Manual

Minidisc Deck

SJ-MD100

Colour
(K).....Black Type

Areas
(E) ..... Europe.
(EB) ..... Great Britain.
(EG) ..... Germany.

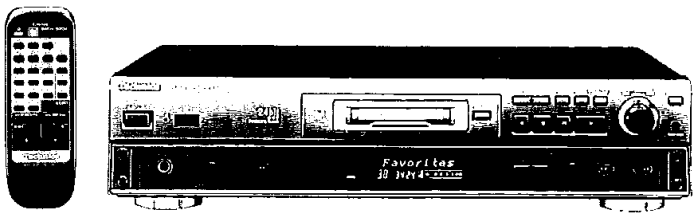

Specifications

System:	Minidisc digital audio system
Recording;	Magnetic field modulation direct overwrite
Reading;	Non-contact optical system with Semiconductor laser (λ=780 nm)
Sampling frequency:	44.1 kHz
Coding system:	ATRAC
Channel:	2 channels, stereo
Frequency response:	5 – 20,000 Hz (±0.3 dB)
S/N (Play):	99 dB
Dynamic range (Play):	97 dB
Wow and flutter:	Below measurable limit
Input:	
Analog input (Level/Impedance);	500 mV/47 kΩ
Digital input (OPTICAL IN 1, OPTICAL IN 2)	
Wavelength;	660 nm
Output:	
Analog output (Level/Impedance);	2.0 V/600 Ω
Digital output (OPTICAL);	
Rated output	–17 dBm
Wavelength	660 nm
Headphone output level:	15 mW max. 32 Ω (adjustable)

General

Power supply:	AC 230 V – 240 V, 50 Hz
Power consumption:	13 W
Dimensions (W × H × D):	430 × 300 × 103 mm
Weight:	3.4 kg

Notes:
Specifications are subject to change without notice.
Weight and dimensions are approximate.

US and foreign patents licensed from Dolby Laboratories Licensing Corporation.

⚠WARNING

This service information is designed for experienced repair technicians only and is not designed for use by the general public. It does not contain warnings or cautions to advise non-technical individuals of potential dangers in attempting to service a product.
Products powered by electricity should be serviced or repaired only by experienced professional technicians. Any attempt to service or repair the product or products dealt with in this service information by anyone else could result in serious injury or death.

Technics®

© 1999 Matsushita Electric Industrial Co., Ltd.
All rights reserved. Unauthorized copying and distribution is a violation of law.

Downloaded from www.Manualslib.com manuals search engine

■ Contents

	Page
Accessories	2
Handling Precautions for Traverse Deck	2
Precaution of Laser Diode	3
Caution for AC Mains Lead	4
Connections	5
Location of Controls	6,7
Basic Recording Operations	8~10
Functions to Assist Recording	11
Other Playback modes	12~14
Convenient Functions	15
Editing MDs	16~23
Timer Recoding and Playback	24
Operation Checks and Component Replacement Procedures	25~33
Self-Diagnostic Function	34
Self Check Function	35
Schematic Diagram	36~48
Printed Circuit Board Diagram	49~54
Wiring Connection Diagram	55
Type Illustration of IC's, Transistors and Diodes	56
Block Diagram	57~62
Terminal Function of IC's	63~68
Measurements and Adjustments	69,70
Replacement Parts List	71~74
Cabinet Parts Location	75
MD Mechanism Parts Location	76
Packaging	77

■ Accessories

AC power supply cord
For (EB) area (RJA0044-C) 1
For (E),(EG) areas (RJA0043-C) 1

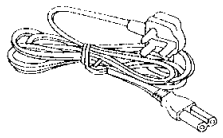

The Illustration shows an AC poewer supply cord for (EB) area.

Optical-fiber cable
(RJL1X007B08) 1

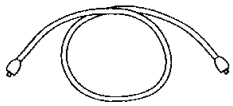

Remote control transmitter
(EUR645272) 1

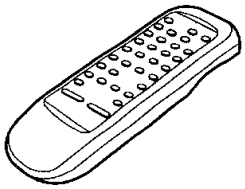

Stereo connection cables
(RJL2P004B08) 1

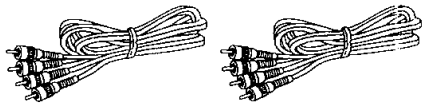

Batteries
(R6/LR6,UM-3) 2
Note: There are available on sales route.

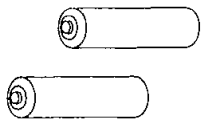

■ Handling Precautions for MD Unit

The laser diode in the MD unit (optical pickup) may break down due to potential difference caused by static electricity of clothes or human body. So, be careful of electrostatic breakdown during repair of the MD unit (optical pickup).

• Handling of MD unit (optical pickup)

1. Do not subject the MD unit (optical pickup) to static electricity as it is extremely sensitive to electrical shock.
2. To prevent the breakdown of the laser diode, an anti-static shorting pin is inserted into the flexible board (FFC board).
   When removing or connecting the short pin, finish the job in as short time as possible.
3. Take care not to apply excessive stress to the flexible board (FFC board).

• Grounding for electrostatic breakdown prevention

1. Human body grounding
   Use the anti-static wrist strap to discharge the static electricity from your body.
2. Work table grounding
   Put a conductive material (sheet) or steel sheet on the area where the traverse deck (optical pickup) is placed, and ground the sheet.

Caution:
The static electricity of your clothes will not be grounded through the wrist strap. So, take care not to let your clothes touch the traverse deck (optical pickup).

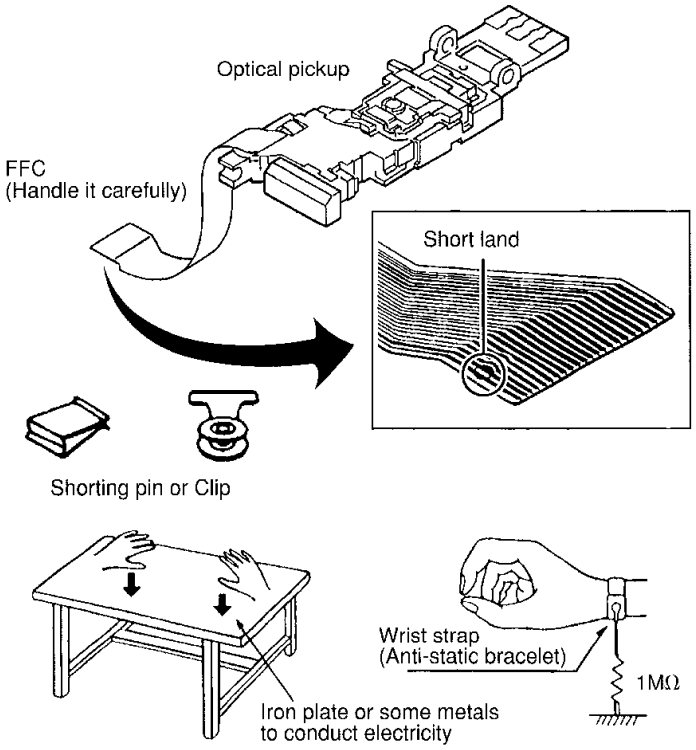

Downloaded from www.Manualslib.com manuals search engine

CAUTION:
THIS PRODUCT UTILIZES A LASER.
USE OF CONTROLS OR ADJUSTMENTS OR PERFORMANCE OF PROCEDURES OTHER THAN THOSE SPECIFIED HEREIN MAY RESULT IN HAZARDOUS RADIATION EXPOSURE.

■ Precaution of Laser Diode

CAUTION: This product utilizes a laser diode with the unit turned "on", invisible laser radiation is emitted from the pick up lens.
Wave length: 780 nm
Maximum output radiation power from pick up: 4.9 μW/VDE

Laser radiation from the pick up unit is safety level, but be sure the followings:

1. Do not disassemble the pick up unit, since radiation from exposed laser diode is dangerous.
2. Do not look at the focus lens using optical instruments.
3. Recommend not to look at pick up lens for a long time.

ACHTUNG: Dieses produkt enthält eine laserdiode. Im eingeschalteten zustand wird unsichtbare laserstrahlung von der lasereinheit adgestrahit.
Wellenlänge: 780 nm
Maximale strahlungsleistung der laserinhelt: 4.9 μW/VDE

Die strahlung an der lasereinheit ist ungefährlich, wenn folgende punkte beachtet werden:

1. Die lasereinheit nicht zerlegen, da die strahlung an der freigelegten laserdiode gefährlich ist.
2. Nicht mit optischen instrumenten in die fokussierlinse blicken.
3. Nicht über längere zeit in die fokussierlinse blicken.

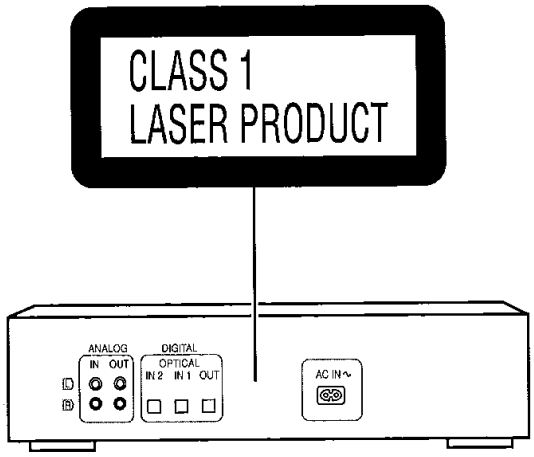

DANGER	INVISIBLE LASER RADIATION WHEN OPEN AND INTERLOCK DEFEATED. AVOID DIRECT EXPOSURE TO BEAM.
ADVARSEL	USYNLIG LASERSTRÅLING VED ÅBNING, NÅR SIKKERHEDSAFBRYDERE ER UDE AF FUNKTION. UNDGÅ UDSÆTTELSE FOR STRÅLING.
VARO!	AVATTAESSA JA SUOJALUKITUS OHITETTAESSA OLET ALTTIINA NÄKYMÄTÖNTÄ LASERSÄTEILYLLE. ÄLÄ KATSO SÄTEESEEN.
VARNING	OSYNLIG LASERSTRÅLNING NÄR DENNA DEL ÄR ÖPPNAD OCH SPÄRREN ÄR URKOPPLAD. BETRAKTA EJ STARÅLEN.
ADVARSEL	USYNLIG LASERSTRÅLING NÅR DEKSEL ÅPNES OG SIKKERHEDSLÅS BRYTES. UNNGÅ EKSPONERING FOR STRÅLEN.
VORSICHT	UNSICHTBARE LASERSTRAHLUNG, WENN ABDECKUNG GEÖFFNET UND SICHERHEITSVERRIEGELUNG ÜBERBRÜCKT. NICHT DEM STRAHL AUSSETZEN.

(Inside of product)

Downloaded from www.Manualslib.com manuals search engine

■ Caution for AC Mains Lead

(For United Kingdom)

("EB" area code model only)

For your safety, please read the following text carefully.

This appliance is supplied with a moulded three pin mains plug for your safety and convenience.
A 5-ampere fuse is fitted in this plug.
Should the fuse need to be replaced please ensure that the replacement fuse has a rating of 5-ampere and that it is approved by ASTA or BSI to BS1362.
Check for the ASTA mark ⓐ or the BSI mark ⓚ on the body of the fuse.

If the plug contains a removable fuse cover you must ensure that it is refitted when the fuse is replaced.
If you lose the fuse cover the plug must not be used until a replacement cover is obtained.
A replacement fuse cover can be purchased from your local dealer.

CAUTION!
IF THE FITTED MOULDED PLUG IS UNSUITABLE FOR THE SOCKET OUTLET IN YOUR HOME THEN THE FUSE SHOULD BE REMOVED AND THE PLUG CUT OFF AND DISPOSED OF SAFELY.
THERE IS A DANGER OF SEVERE ELECTRICAL SHOCK IF THE CUT OFF PLUG IS INSERTED INTO ANY 13-AMPERE SOCKET.

If a new plug is to be fitted please observe the wiring code as shown below.
If in any doubt please consult a qualified electrician.

IMPORTANT

The wires in this mains lead are coloured in accordance with the following code:
Blue: Neutral, Brown: Live.
As these colours may not correspond with the coloured markings identifying the terminals in your plug, proceed as follows:
The wire which is coloured Blue must be connected to the terminal which is marked with the letter N or coloured Black or Blue.
The wire which is coloured Brown must be connected to the terminal which is marked with the letter L or coloured Brown or Red.

WARNING: DO NOT CONNECT EITHER WIRE TO THE EARTH TERMINAL WHICH IS MARKED WITH THE LETTER E, BY THE EARTH SYMBOL ⏚ OR COLOURED GREEN OR GREEN/YELLOW.

THIS PLUG IS NOT WATERPROOF—KEEP DRY.

Before use

Remove the connector cover.

How to replace the fuse

The location of the fuse differ according to the type of AC mains plug (figures A and B). Confirm the AC mains plug fitted and follow the instructions below.
Illustrations may differ from actual AC mains plug.

1. Open the fuse cover with a screwdriver.

Figure A

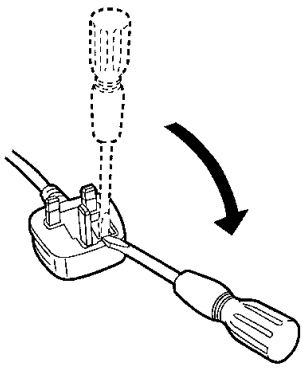

Figure B

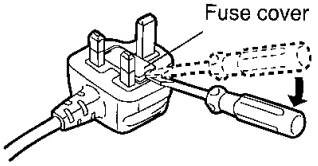

2. Replace the fuse and close or attach the fuse cover.

Figure A

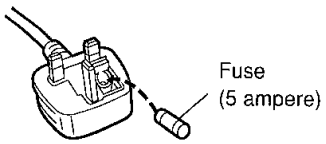

Figure B

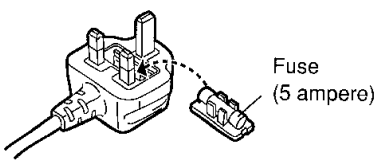

Downloaded from www.Manualslib.com manuals search engine

■ Connections

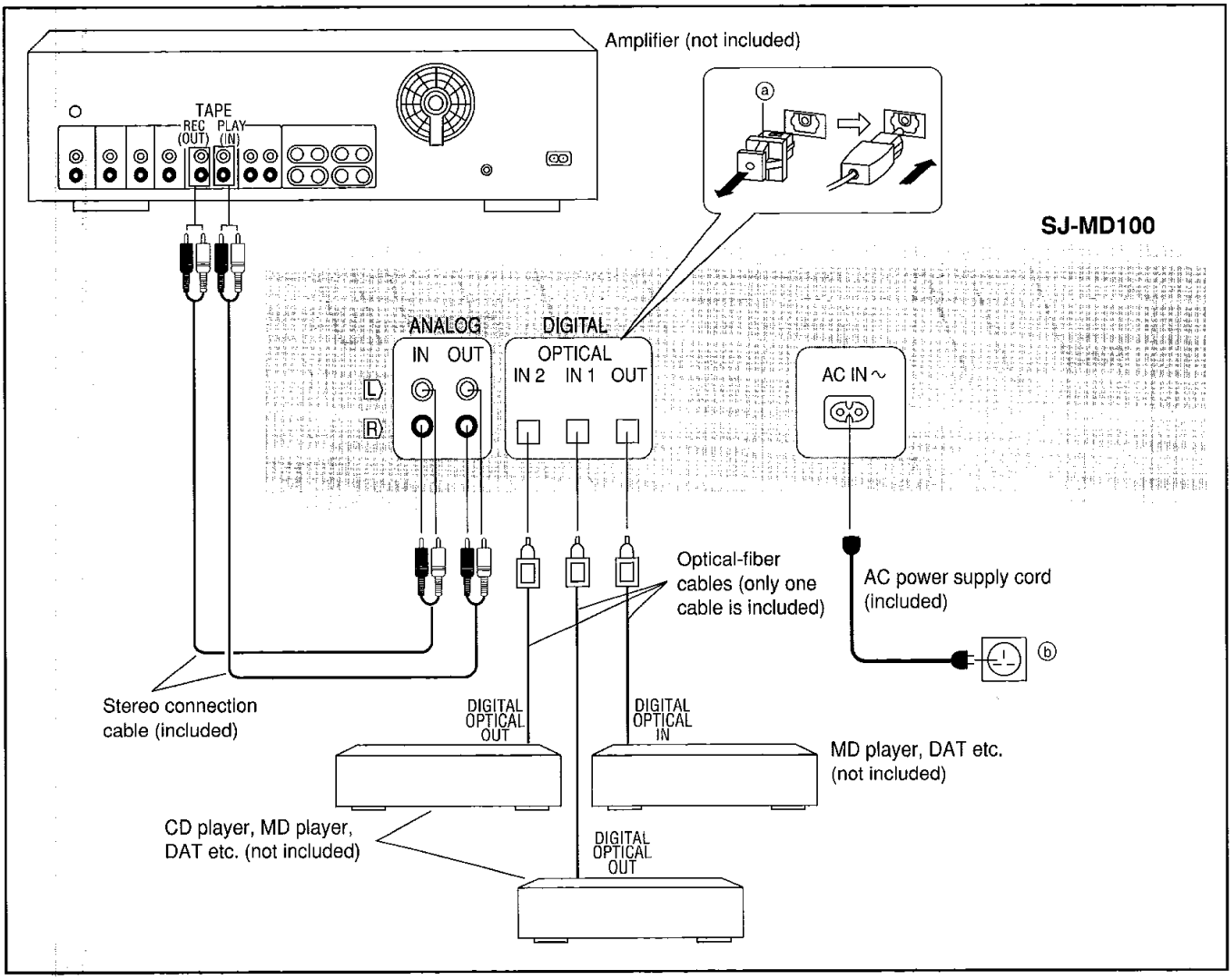

This example shows the unit connected to an amplifier through the ANALOG IN/OUT terminals, and to digital equipment (CD player, MD player, DAT, etc.) through the DIGITAL OPTICAL IN/OUT terminals.
Before making connections, turn off all the components.

ANALOG IN / OUT terminals

Connect the ANALOG OUT terminals to PLAY IN terminals on an amplifier to play through speakers connected to the amplifier.
Connect the ANALOG IN terminals to the REC OUT terminals on an amplifier to record sounds from other components connected to the amplifier.

Stereo connection cable

white (L)
red (R)

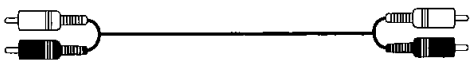

DIGITAL OPTICAL terminals

Remove the dust-protection caps (ⓐ) before connecting the optical fiber cables.
Connect IN 1 and IN 2 to OPTICAL OUT terminals on other playback components for digital recording to this unit.
Connect OUT to OPTICAL IN terminals on other recording components to record from this unit.

Note

DIGITAL OPTICAL terminals not in use should be covered by a dust protection cap.

FOR UNITED KINGDOM ONLY
BE SURE TO READ THE CAUTION FOR THE AC MAINS LEAD BEFORE CONNECTION.

AC IN connector

The AC IN connector is connected to an electrical outlet (ⓑ) in your home.

Insertion of Connector
Even when the connector is perfectly inserted, depending on the type of inlet used, the front part of the connector may jut out as shown in the drawing. However there is no problem using the unit.

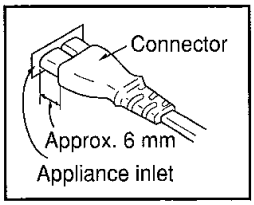

Downloaded from www.Manualslib.com manuals search engine

■ Front Panel Controls

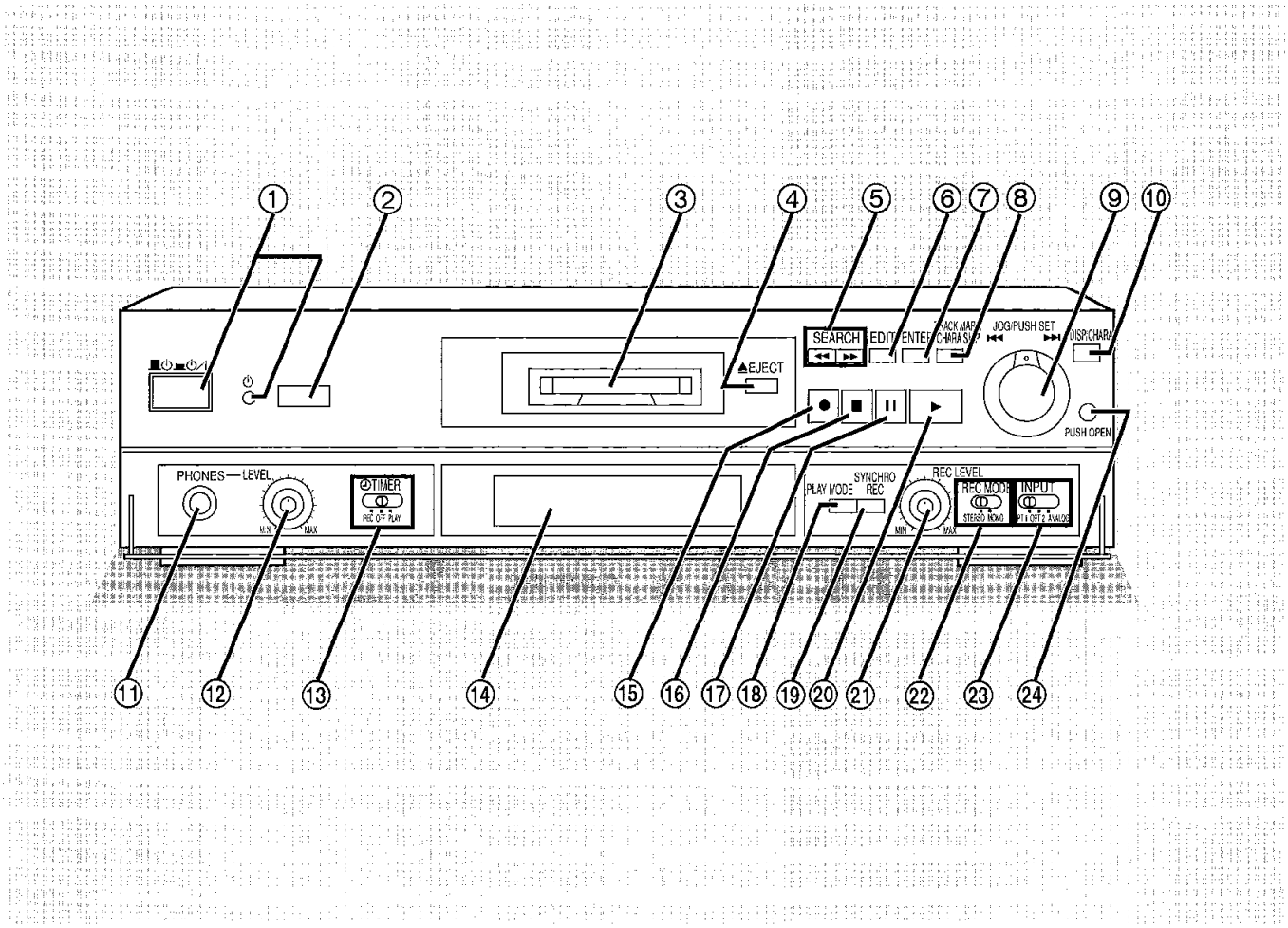

Main unit

No.	Name

① Unit on/off button (■ ⏻ ▬ ⏻ /I) and remote standby indicator (⏻)

Use this button to turn the unit on and off.

■ (off): The unit is in standby mode.

▬ (on): The unit can be turned on and off with the remote control. When the unit is turned off with the remote control it is in remote standby and the indicator lights.

The unit is still using a small amount of power in the standby and remote standby conditions. Standby uses less power.

② Remote control signal sensor
③ MD slot
④ Eject button (▲ EJECT)
⑤ Search buttons (◀◀ ▶▶ SEARCH)
⑥ Editing mode button (EDIT)
⑦ Enter button used in editing (ENTER)
⑧ Track mark mode select / Character skip button (TRACK MARK / CHARA SKIP)
⑨ JOG/skip dial (JOG/PUSH SET ⏮, ⏭)
⑩ Display mode select / Character select button (DISP/CHARA)

No.	Name

⑪ Headphones jack (PHONES)
⑫ Headphones level control (LEVEL)
⑬ Timer selector (⏲ TIMER)
⑭ Display
⑮ Record button (●)
⑯ Stop button (■)
⑰ Pause button (II)
⑱ Playback mode selector (PLAY MODE)
⑲ Synchro-record button (SYNCHRO REC)
⑳ Playback/recoding start button (▶)
㉑ Recording level control (REC LEVEL)
㉒ Recording mode selector (REC MODE)
㉓ Input selector (INPUT)
㉔ Panel open button (PUSH OPEN)

Press this button to open the transparent panel. Close the panel by hand.

Note

The transparent panel is open in all explanations in this manual.

Downloaded from www.Manualslib.com manuals search engine

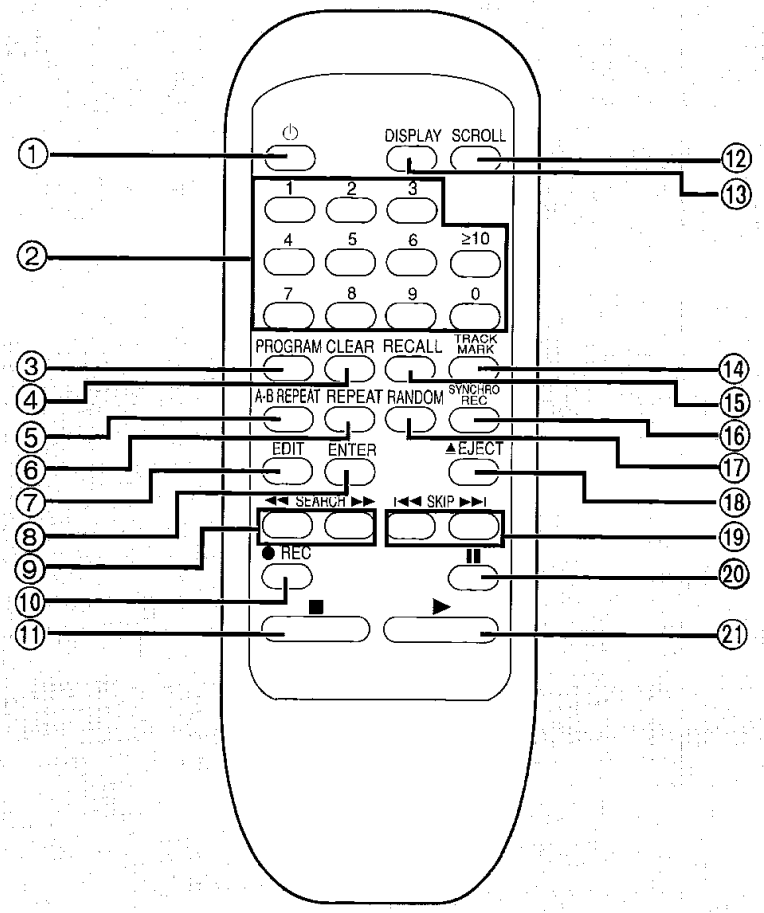

Remote control

No.	Name
①	Unit on/off button (⏻) Use this button to turn the unit on and off when the unit's [⏻] button is on (▬).
②	Numeric buttons (1 - 0, ≥ 10)
③	Program button (PROGRAM)
④	Program clear button (CLEAR)
⑤	A-B repeat button (A-B REPEAT)
⑥	Repeat button (REPEAT)
⑦	Editing mode button (EDIT)
⑧	Enter button used in editing (ENTER)
⑨	Search buttons (◀◀SEARCH ▶▶)
⑩	Record button (● REC)
⑪	Stop button (■)

No.	Name
⑫	Scroll button (SCROLL)
⑬	Display select button (DISPLAY)
⑭	Track mark select button (TRACK MARK)
⑮	Recall button (RECALL)
⑯	Synchro-record button (SYNCHRO REC)
⑰	Random play button (RANDOM)
⑱	Eject button (▲EJECT)
⑲	Skip buttons (I◀◀SKIP ▶▶I)
⑳	Pause button (II)
㉑	Playback/recording start button (▶)

Downloaded from www.Manualslib.com manuals search engine

■ Basic Recording Operations

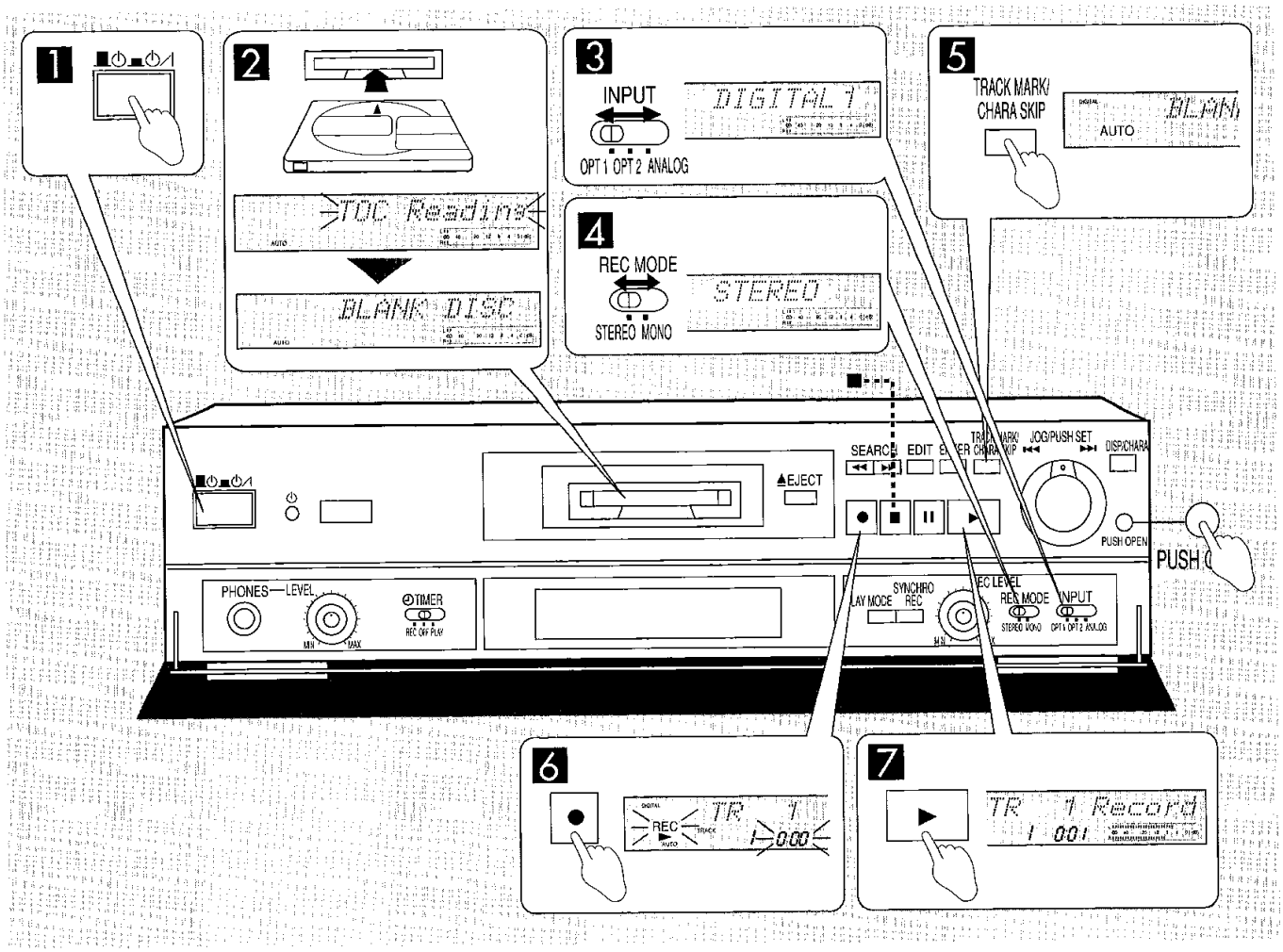

Before operation
Turn on the unit you are recording from and prepare it for play.

1 **Press [■ ⏻ ▬ ⏻ /I].**

2 **Insert the MD for recording.**
The MD is pulled into the unit after it is push in part of the way.
The message "TOC Reading" flashes on the display and then any text information about the disc is shown.

3 **Select the input terminals to be used with [INPUT].**
OPT 1: When using DIGITAL OPTICAL IN 1 terminal
OPT 2: When using DIGITAL OPTICAL IN 2 terminal
ANALOG: When using ANALOG IN terminal

4 **Select the recording mode with [REC MODE].**
STEREO: This is the normal recording mode.
MONO: Twice the amount of material can be recorded in this mode, compared to the STEREO mode.

5 **Select the marking mode with [TRACK MARK/CHARA SKIP].**
Each time the button is pressed: AUTO ↔ off
AUTO: Track marks are automatically inserted.
Off: If track marks are unnecessary or when you want to insert them manually.

6 **Press [●].**
The unit goes to recording standby.

If you selected ANALOG in step 3:
Adjust the recording level.

7 **Press [▶] to start recording and start play back of the sound source.**

To stop recording
Press [■].
Recording has finished when the message "UTOC Writing" disappears from the display.

Note
- The recording and marking modes and the input source cannot be changed while recording.
- Do not turn the unit off or eject the disc while "UTOC Writing" is still on the display.
  This can cause the recording to be erased and damage to the disc.

Downloaded from www.Manualslib.com manuals search engine

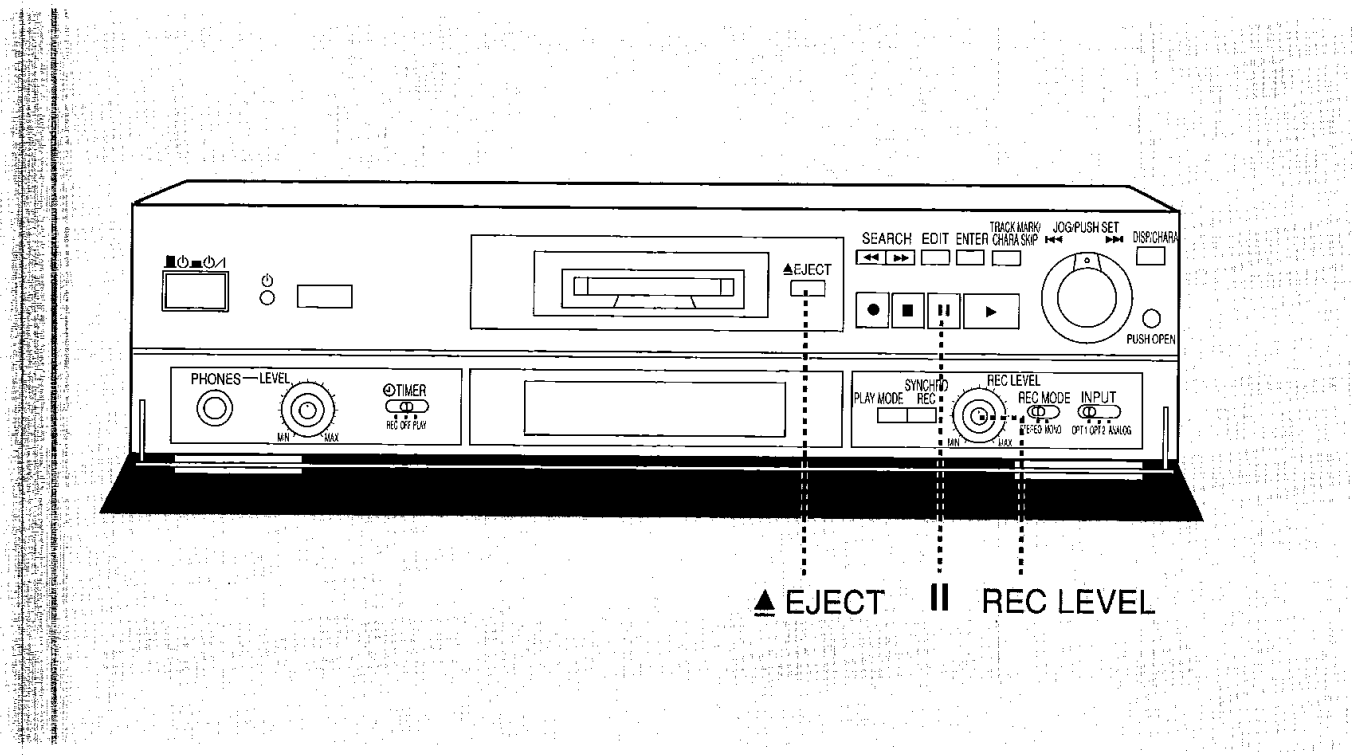

To pause recording

Press [❚❚].
A track mark is added if the marking mode has been set to AUTO.
Press again to resume recording.

To eject the MD

Press [▲EJECT].

Note

Recording starts from where the last recording ended so it is not necessary to look for a blank section.
You cannot record over tracks.
If a track is no longer required and you need to make space on the disc, use the editing functions.

Your attention is drawn to the fact that recording pre-recorded tapes or discs or other published or broadcast material may infringe copyright laws.

Digital recording

Input through OPT 1 or OPT 2 will result in digital recording.
This unit has a sampling rate converter.
This enables you to record sound from satellite and cable tuners (32 kHz and 48 kHz).
The message "UNLOCK" is displayed if the source equipment is not connected correctly or it isn't on.
The number of times you can record and re-record digital material is limited.
Recording level adjustments are made automatically.

Auto tracking

When set to AUTO, track marks are inserted as they are received from a digital source, or after three seconds of silence when analog recording.

Track marks may not be inserted correctly while analog recording in the following cases:
If the space between tracks is short;
If there is noise between tracks;
If there are parts of the track that play at an extremely low level;
If recording is started partway through a track (the first silent section after recording begins is not registered).
Use the editing functions after recording is finished to correct the track marks.

How to adjust the recording level

Necessary when recording is analog

① Playback the source to be recorded.
② Turn [REC LEVEL] to select the right level.
Set the dial so that highest level on the source pushes the peak level meters just up to 0 dB. (A red indicator lights if the level is too high.)

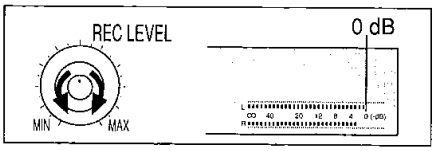

③ Stop the source.
Now begin recording

Downloaded from www.Manualslib.com manuals search engine

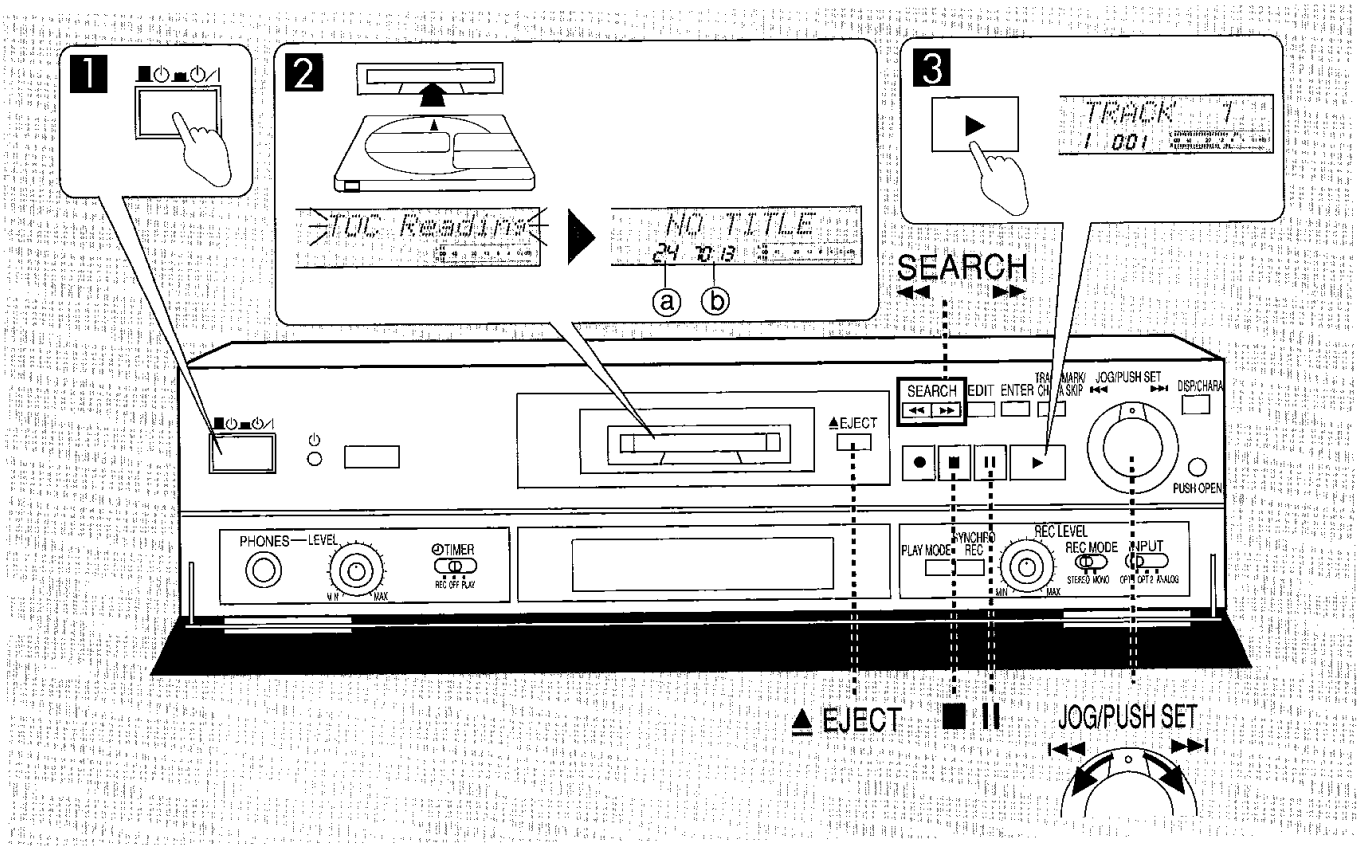

1 **Press [■ ⏻ ▬ ⏻ /I].**
The unit comes on.

2 **Insert the MD.**
The MD is pulled into the unit after it is push in part of the way.
The message "TOC Reading" flashes on the display and then any text information about the disc is shown.
ⓐ Total number of tracks
ⓑ Total play time

3 **Press [▶].**

To skip tracks	backward ⏮ ⏭ forward
To find a specific point	backward ◀◀ ▶▶ forward The disc is played at high speed until the button is released.

To stop play
Press [■].

To pause play
Press [II].
Press again to resume play.

To eject the MD
Press [▲ EJECT].

Reference
The unit automatically plays stereo and monaural MDs.

Downloaded from www.Manualslib.com manuals search engine

■ Functions to Assist Recording

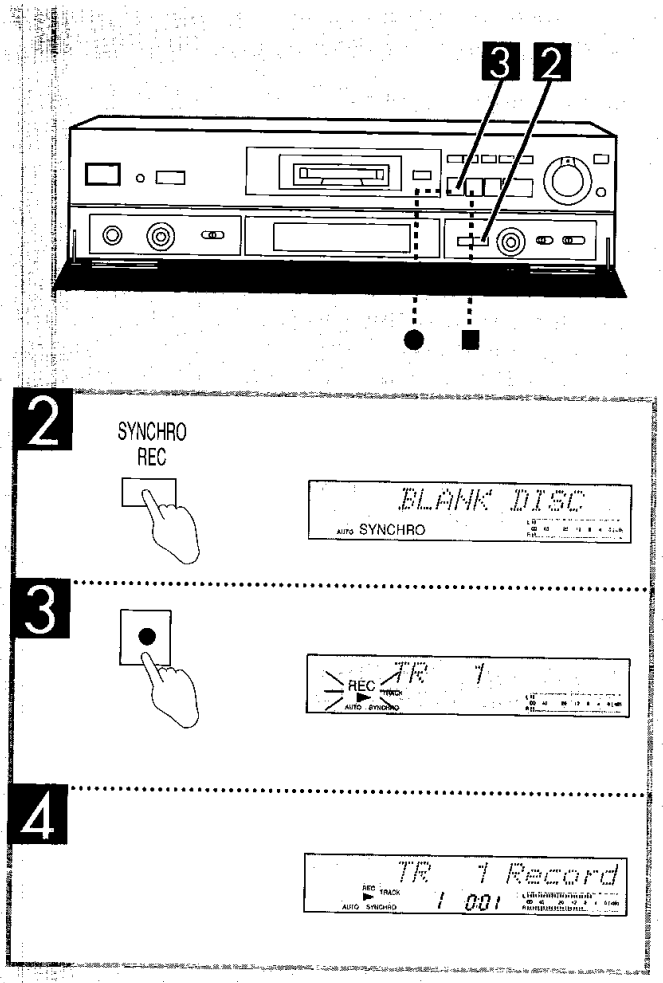

Synchronized recording

Recording starts as soon as sound input is detected.

1 **Insert an MD, select the source, recording and marking modes.**

If you have selected analog input, press [●], adjust the recording level and press [■].

2 **Press [SYNCHRO REC].**
"SYNCHRO" appears on the display.

3 **Press [●].**
The unit goes to recording standby.

4 **Start playback of the source.**
Recording starts as soon as sound is detected.

To stop recording

Press [■].
Recording has finished when the message "UTOC Writing" disappears from the display.

To pause recording

Pause or stop the sound source and this unit pauses after 4 seconds of silence. Recording resumes when the source is stated again. [❚❚] on this unit doesn't work while this function is on.

This unit is paused when playback is finished.
Press [■] to cancel the function.

Note

Recording quality can be affected if a track begins with extremely low volume or if there are almost silent parts during the track. Do not use this function if the source you are recording contains such tracks. (Track marks can be added with the editing function after recording.)

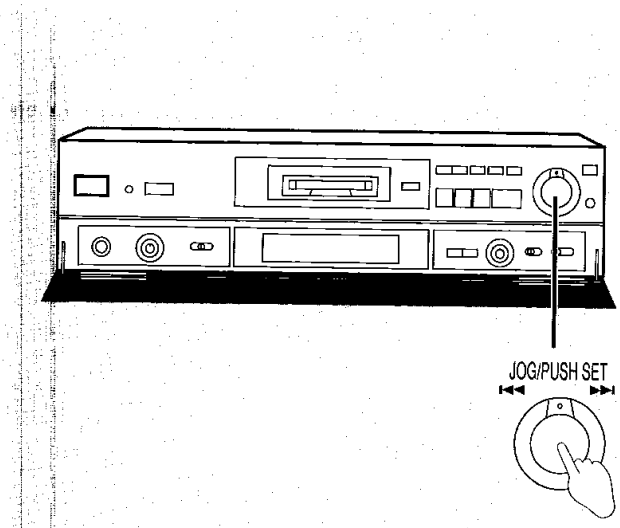

Adding track marks during recording

Add track marks where you want.

During recording

Press [JOG/PUSH SET].
A track mark is added each time the button is pressed and the number of tracks increases.

Reference

Up to 254 track marks can be inserted.

Downloaded from www.Manualslib.com manuals search engine

■ Other Playback modes

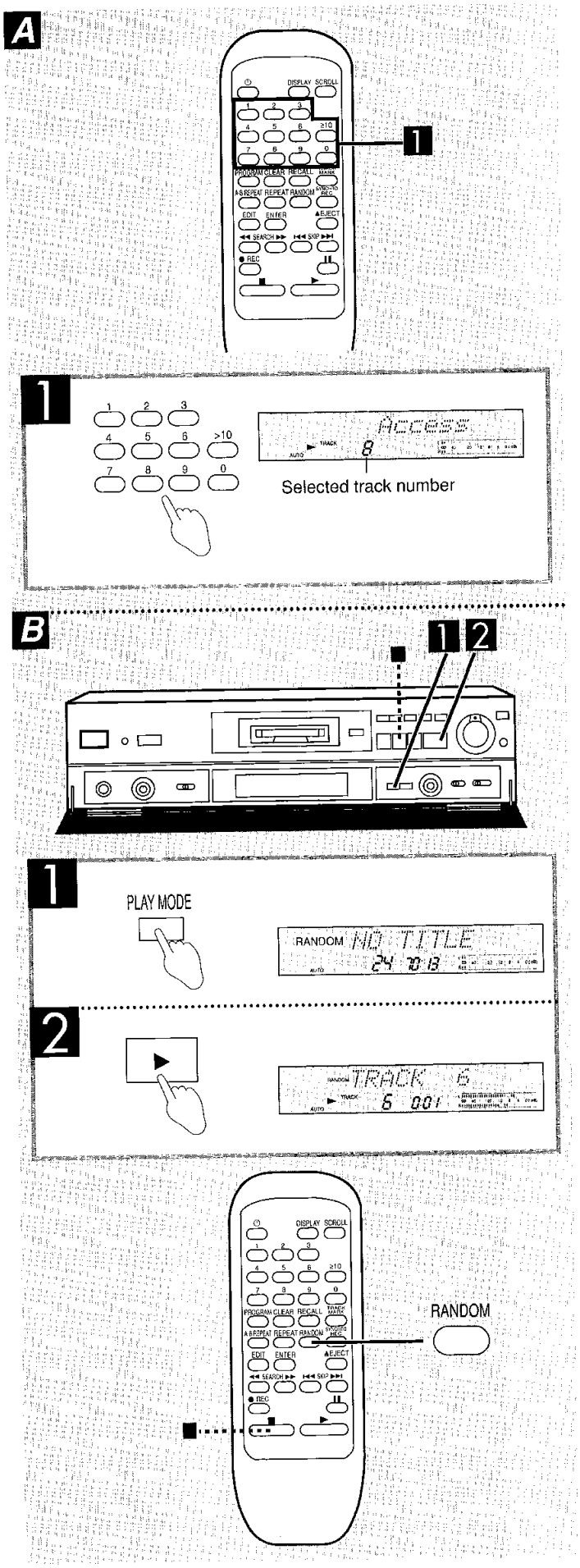

Direct play (remote control only) A

Enter a number to play a track.

Either while stopped or during play

1 Press the numeric buttons.
The selected track starts playing.
Play then continues to the final track.

To select a track numbered 1 to 9
Press the corresponding numeric button.

To select a two digit number (10 to 99)
First press [≥10] then the corresponding numeric buttons.
e.g. Track 10: [≥10] → [1] → [0]

To select a three digit number (100 to 254)
First press [≥10] twice then the corresponding numeric buttons.
e.g. Track 235: [≥10] → [≥10] → [2] → [3] → [5]

Random play B

Randomly plays all the tracks on the MD.

On the main unit
While stopped

1 Press [PLAY MODE] so "RANDOM" appears on the display.
Each time the button is pressed: PRGM → RANDOM → off

2 Press [▶].
All tracks play once each in random order.

On the remote control
While stopped
Press [RANDOM].
Random play begins immediately.

To cancel random play
Press [■]. (Press twice if the unit is playing.)

Note

During random play, you cannot skip back to tracks that have been played, or search backward or forward between tracks.

Downloaded from www.Manualslib.com manuals search engine

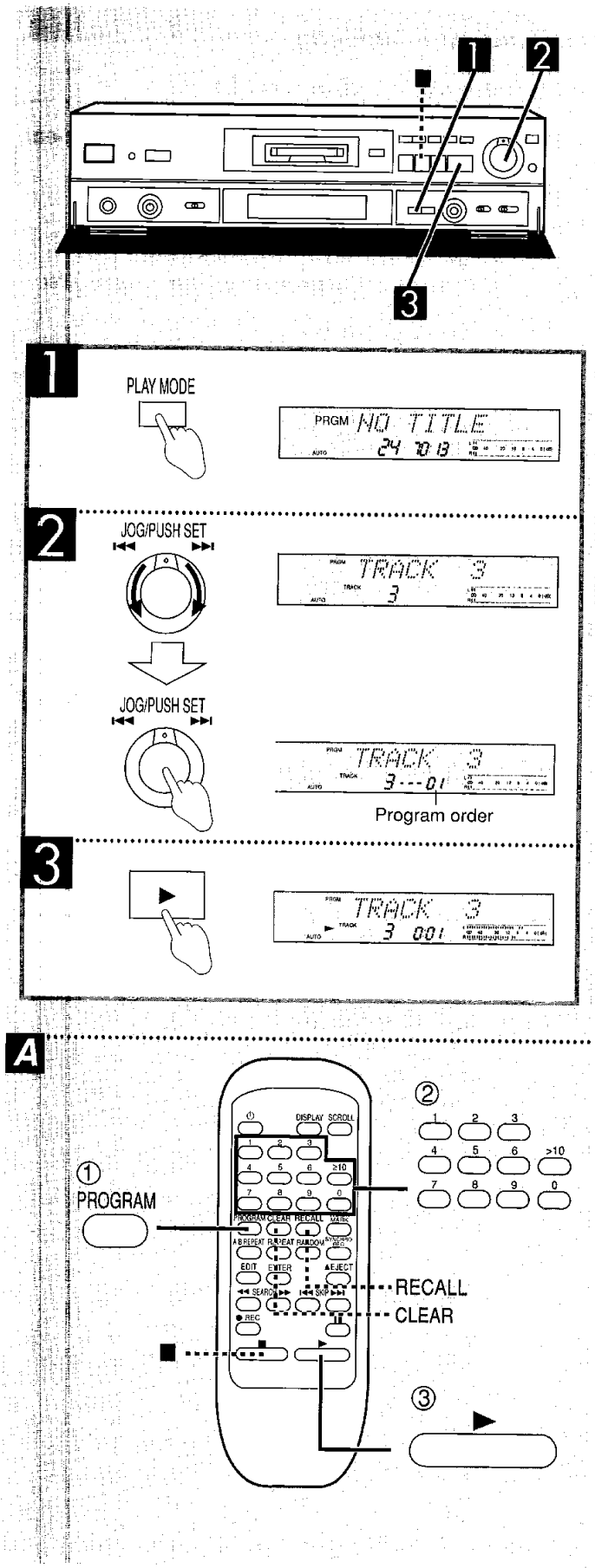

Program play

This function allows you to playback up to 24 tracks in a selected order.

On the main unit
While stopped

1 **Press [PLAY MODE] so "PRGM" appears on the display.**
Each time the button is pressed: PRGM → RANDOM → off

2 **Turn [JOG/PUSH SET] then press when the required track number appears on the display.**
Repeat this step to program all the required tracks in order.

"FULL" appears on the display when there is no space left in the program.

3 **Press [▶].**
The selected program begins.

On the remote control A
While stopped
① Press [PROGRAM].
② Select the tracks in the required order with the numeric buttons.
③ Press [▶].

To cancel program play
Press [■]. (Press twice if the unit is playing.)
"CLEAR" appears on the display for a second and "PRGM" is cleared.
The programmed contents are also cleared.

Note
The program remains intact even if the unit is turned off and on again.

To clear particular tracks from the program (remote control only)
1. Press [RECALL] successively until the track to be cleared appears on the display.
2. Press [CLEAR] while "RECALL" is on the display.
"CLEAR" appears on the display and the track is removed from the program.

It is not necessary to press [RECALL] if you want to clear the last track from the program. The last track is removed each time [CLEAR] is pressed.

Downloaded from www.Manualslib.com manuals search engine

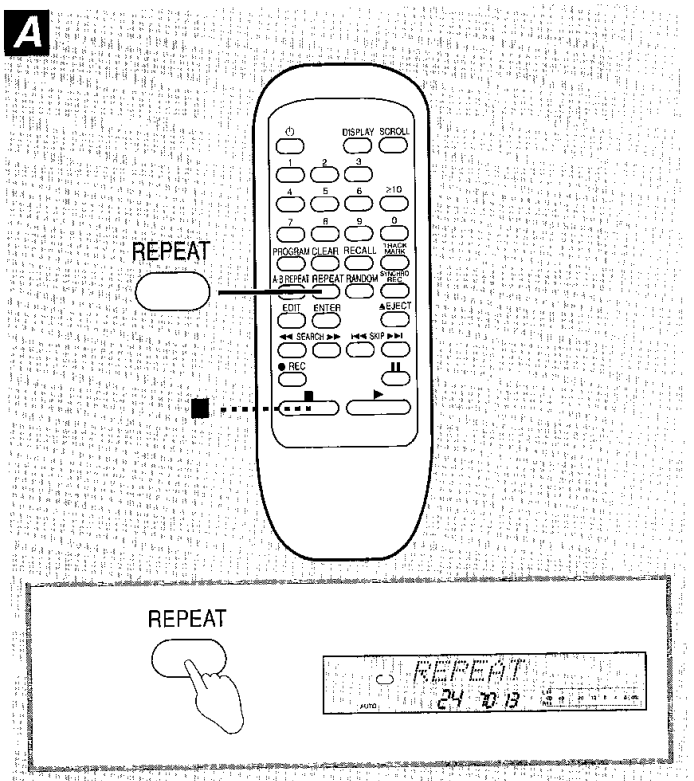

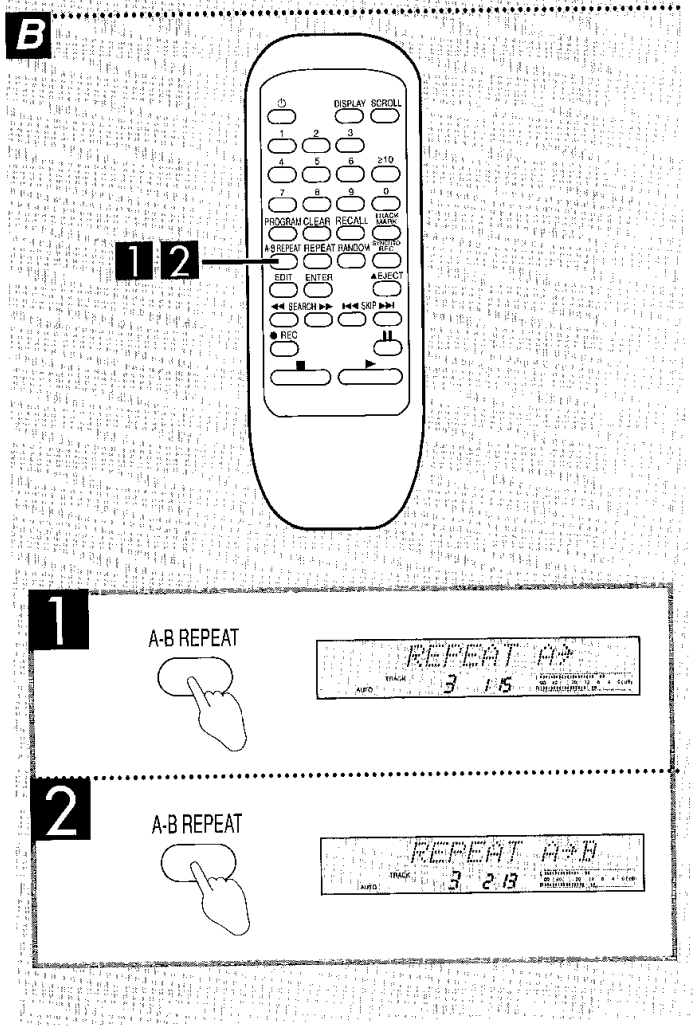

Repeat play (remote control only)

Repeating one or all of the tracks A

Press [REPEAT] so either " ↻ " or "1- ↻ " appears on the display.

Each time the button is pressed: ↻ → 1- ↻ → off

↻ : all tracks played repeatedly
This mode also functions during random and program play.
Press [REPEAT] so " ↻ " appears on the display before or after play is started.
1- ↻ : one track played repeatedly
If activated during play, the current track is played repeatedly.
If activated before play, the first track is played repeatedly after play starts.
Select another track by skipping or selecting it directly with the numeric buttons.

Canceling repeat play

Press [■]. (Press twice if unit is playing.)
The mode is also cleared if [REPEAT] is pressed to clear " ↻ " or "1- ↻ " from the display.

Repeating a particular section - A-B repeat B

During play

1 Press [A-B REPEAT] at the point repeating is to start.

2 Press [A-B REPEAT] again at the point repeating is to finish.

The chosen section plays repeatedly.

To cancel A-B repeat

Press [A-B REPEAT].

It is also cleared if play is stopped.

Downloaded from www.Manualslib.com manuals search engine

■ Convenient Functions

A

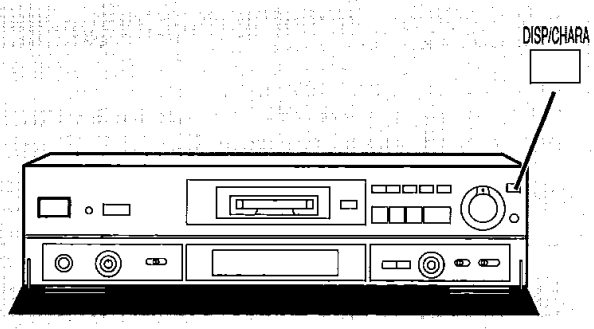

Changing the display

A

Press [DISP/CHARA].

Different information appears on the display each time the button is pressed. The information shown depends on the condition of the unit.

Example

During play

① Name of track and elapsed time
② Track number and remaining time

While recording

① Track number and elapsed time for that track
② Remaining time on MD

While stopped

① Title of disc, total number of tracks and total play time of the disc
② Remaining available time on the disc

Reference

Text over 12 letters long scrolls whenever that display is returned to.

B

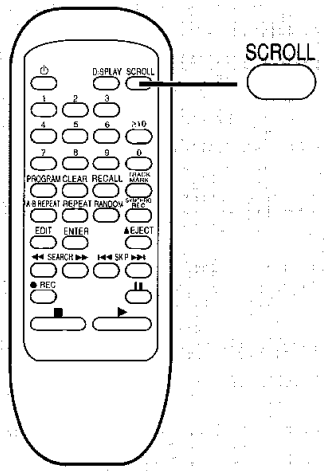

Scrolling the display (remote control only)

B

When the title of a disc or the names of tracks are too long to fit on the display at one time, the unit automatically scrolls that information across the screen once when the information is first accessed. This operation allows you to see the information in full again.

While the disc title or track name are being displayed

Press [SCROLL]

The information scrolls from right to left across the display.

C

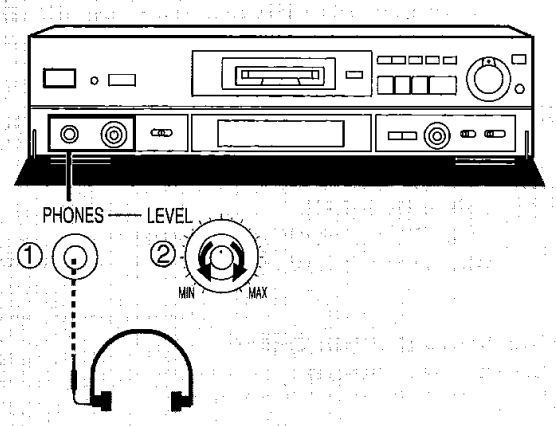

Using headphones

C

① Plug the headphones (not included) into the [PHONES] jack.
Plug type: Large stereo
② Turn [LEVEL] to adjust the volume.

Note

Avoid listening for prolonged periods of time to prevent hearing damage.

D

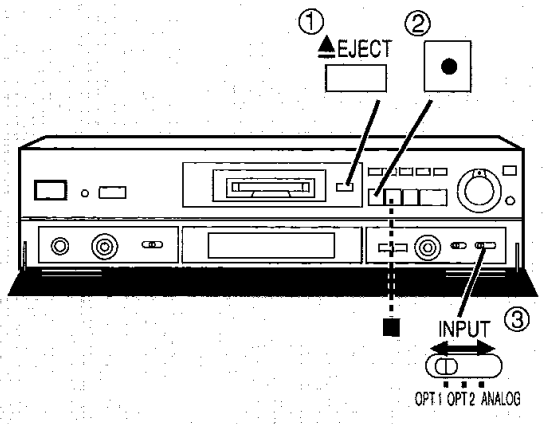

Monitor function

D

Input from units connected to this unit's input terminals can be sent to units connected to this unit's output terminals.
The signal is output through the OPTICAL OUT and ANALOG OUT terminals. This unit converts digital and analog signals automatically so you can, for example, send digital input directly to an analog amplifier.

① Press [▲ EJECT] if an MD is in the unit. (This function will not work if an MD is in the unit.)
② Press [●]. ("Monitor" appears on the display.)
③ Select the source with [INPUT].

Begin play on the selected source and the sound is output automatically.
Press [■] to cancel.

Downloaded from www.Manualslib.com manuals search engine

■ Editing MDs

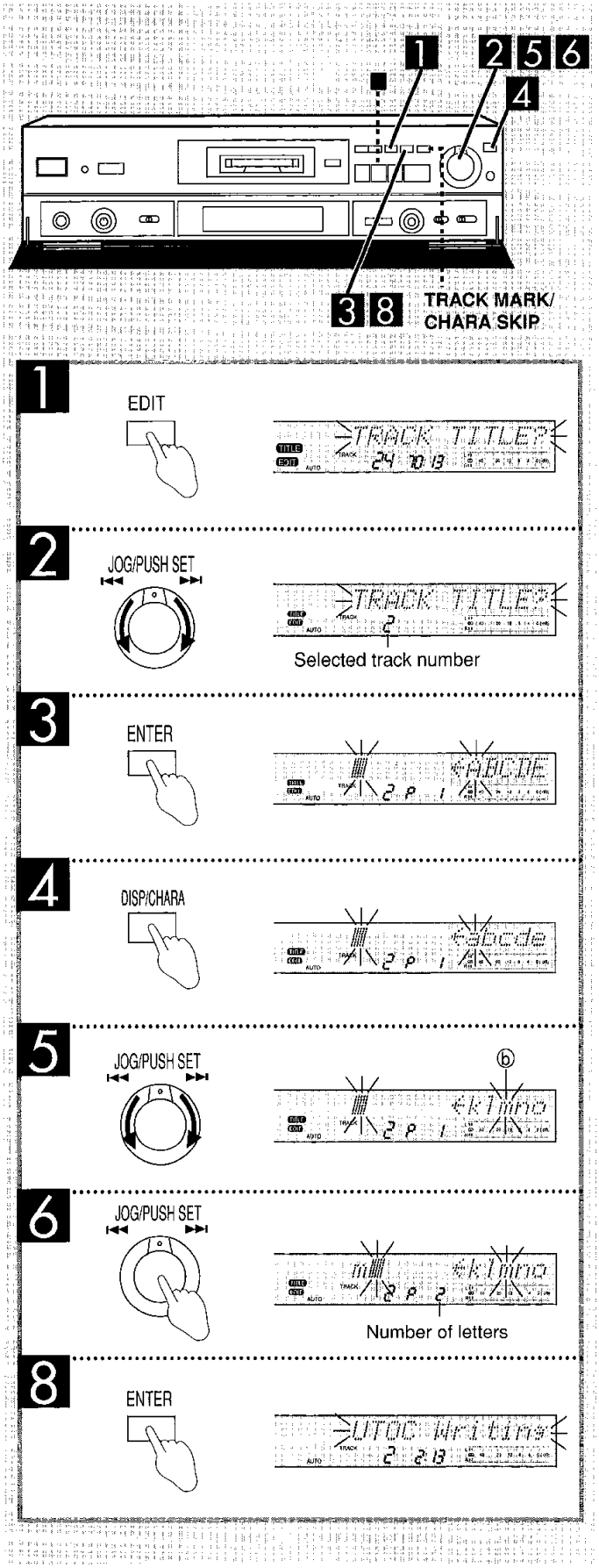

Titling tracks and discs

Each title can have up to 100 letters.
A single MD can hold about 1700 letters worth of text information.
You can not add titles to prerecorded MDs.

Make sure the disc is record enabled.

While stopped

1 Press [EDIT] to select "TRACK TITLE?" or "DISC TITLE?"
Each time the button is pressed: TRACK TITLE? → DISC TITLE? → MOVE? → COMBINE? → TRACK ERASE? → ALL ERASE? → current display

2 When titling a track
Turn [JOG/PUSH SET] to select the track.

3 Press [ENTER].
The text input mode is activated.

4 Press [DISP/CHARA] to select the kind of text.
Each time the button is pressed: CAPITALS/symbols → lower case/symbols → numerals

5 Turn [JOG/PUSH SET] to select the letter (ⓑ).
Five letters are shown on the right hand side of the display at one time.
Turn [JOG/PUSH SET] or press [TRACK MARK/CHARA SKIP] to show the next group of five letters.

6 Press [JOG/PUSH SET].
The selected letter is now shown on the left hand side of the display and the cursor marks the place where the next character will go.

7 Repeat steps 4, 5 and 6 to complete the title.

8 Press [ENTER].
"UTOC Writing" appears on the display.
When this message disappears the title has been entered.

Stopping part way through

After step 1 or 2: Press [■].
After steps 3 to 7: Press [EDIT] then [■].

Downloaded from www.Manualslib.com manuals search engine

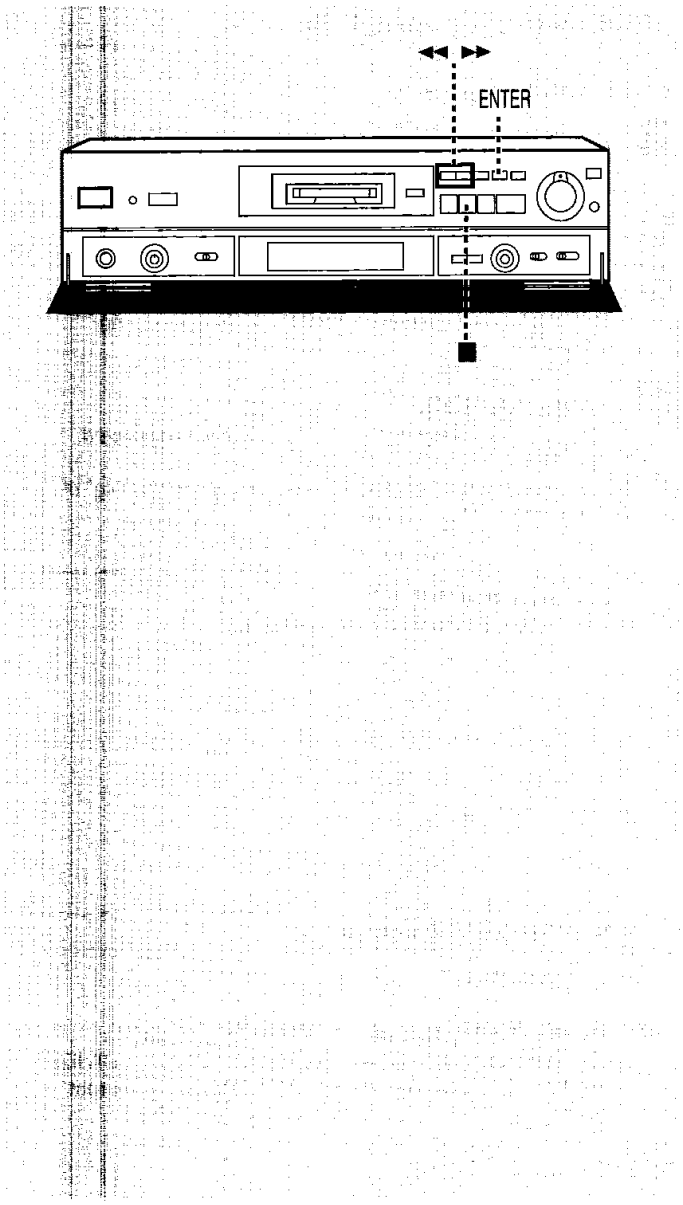

Characters available for titles

Text mode	Character
CAPITALS / symbol	A B C D E F G H I J K L M N O P Q R S T U V W X Y Z space ! " # $ % & ´ ( ) * + , − . / : ; < = > ? @ _ '
lower case / symbol	a b c d e f g h i j k l m n o p q r s t u v w x y z space ! " # $ % & ´ ( ) * + , − . / : ; < = > ? @ _ '
Numerals	0 1 2 3 4 5 6 7 8 9

Editing text

Press [◀◀] or [▶▶] to move the cursor.

Erasing letters
Move the cursor so it covers the letter to be erased and press [■].
The letter is erased and the other letters move to fill the space.

Inserting a letter or space
Move the cursor to the letter to the right of the place where the new letter or space is to go.
Now select and enter the new letter with [JOG/PUSH SET].

Changing letters
① Erase the old letter.
② Insert the new letter.

Making corrections to a title
① Select the title to be corrected
② Use the above editing techniques to correct the title.
③ Press [ENTER].

Downloaded from www.Manualslib.com manuals search engine

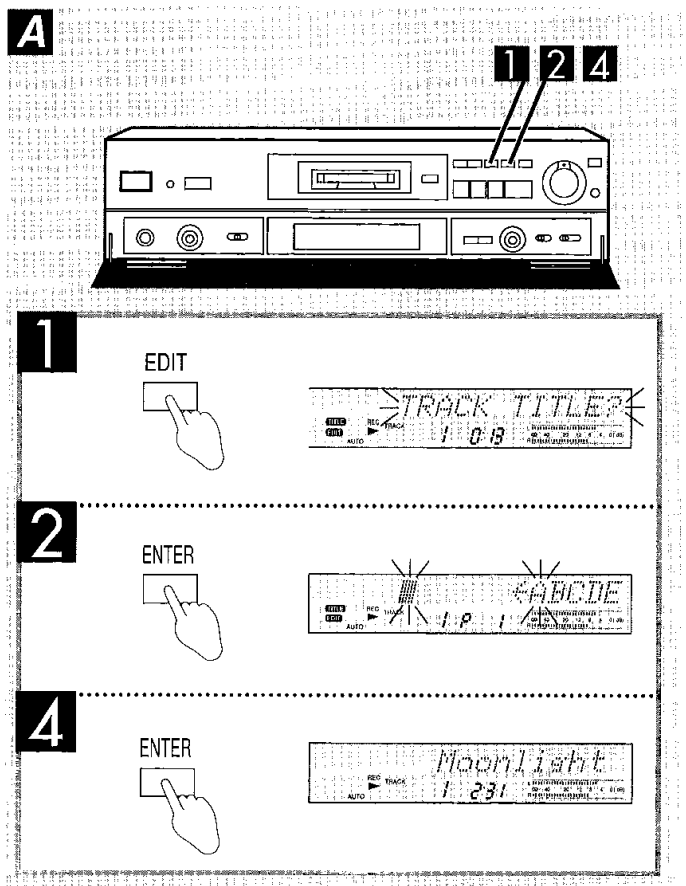

Titling a track being recorded A

While recording is in process

1 Press [EDIT].
"TRACK TITLE?" appears on the screen.

2 Press [ENTER].

3 Enter the title.
This can be continued even if the track changes during recording.

4 Press [ENTER].
The previous display is restored and the title is displayed.

The title is entered after recording finishes and "UTOC Writing" disappears from the display.

To cancel part way through
Press [EDIT] until the normal display is restored.

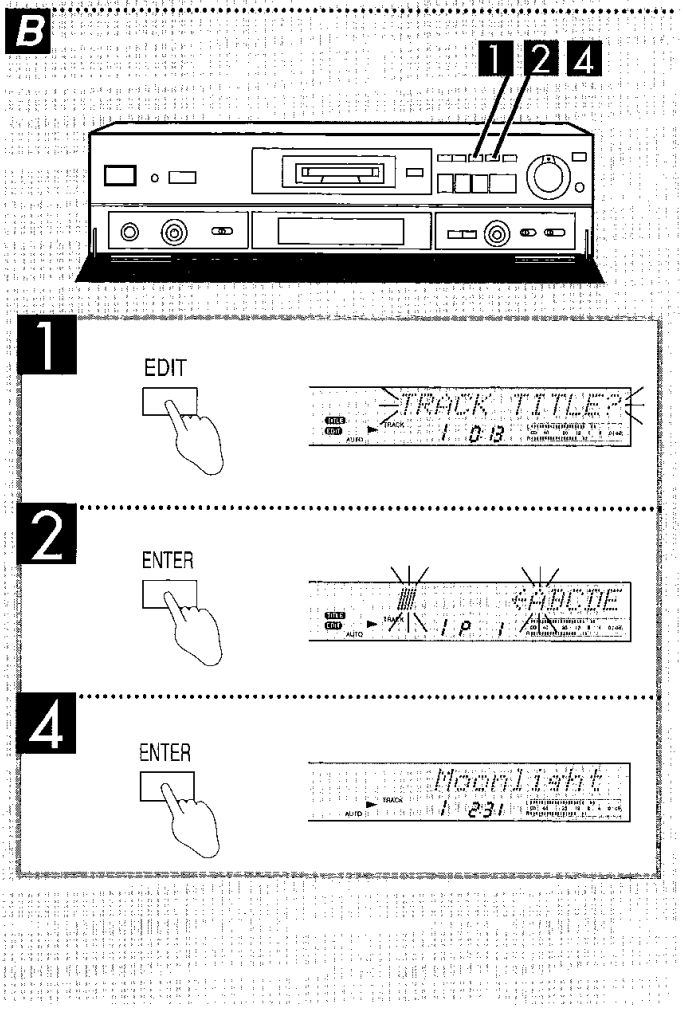

Titling a track being played B

While track is playing

1 Press [EDIT] to select "TRACK TITLE?".
Each time the button is pressed: TRACK TITLE? → DIVIDE? → MOVE? → COMBINE? → TRACK ERASE? → current display

2 Press [ENTER].

3 Enter the title.
The track is played repeatedly.

4 Press [ENTER].
The previous display is restored and the title is displayed.

The title is entered after play stops and "UTOC Writing" disappears from the display.

To cancel part way through
Press [EDIT] until the normal display is restored.

Downloaded from www.Manualslib.com manuals search engine

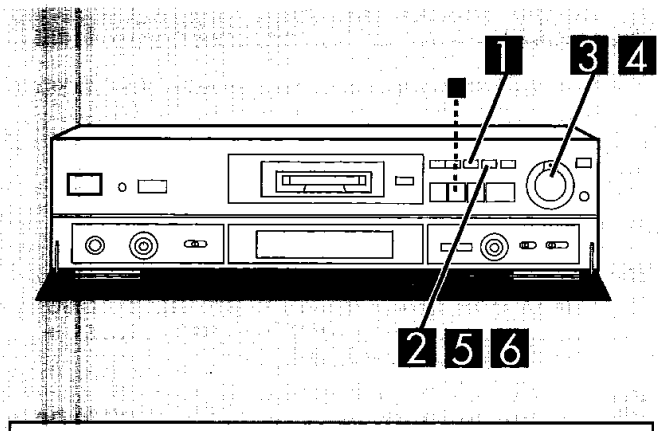

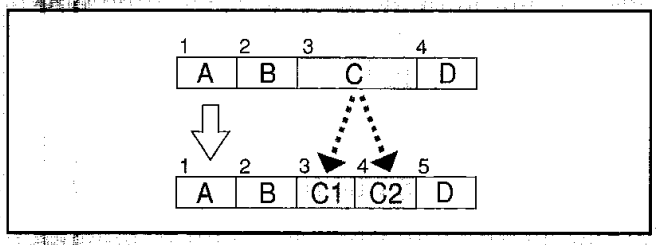

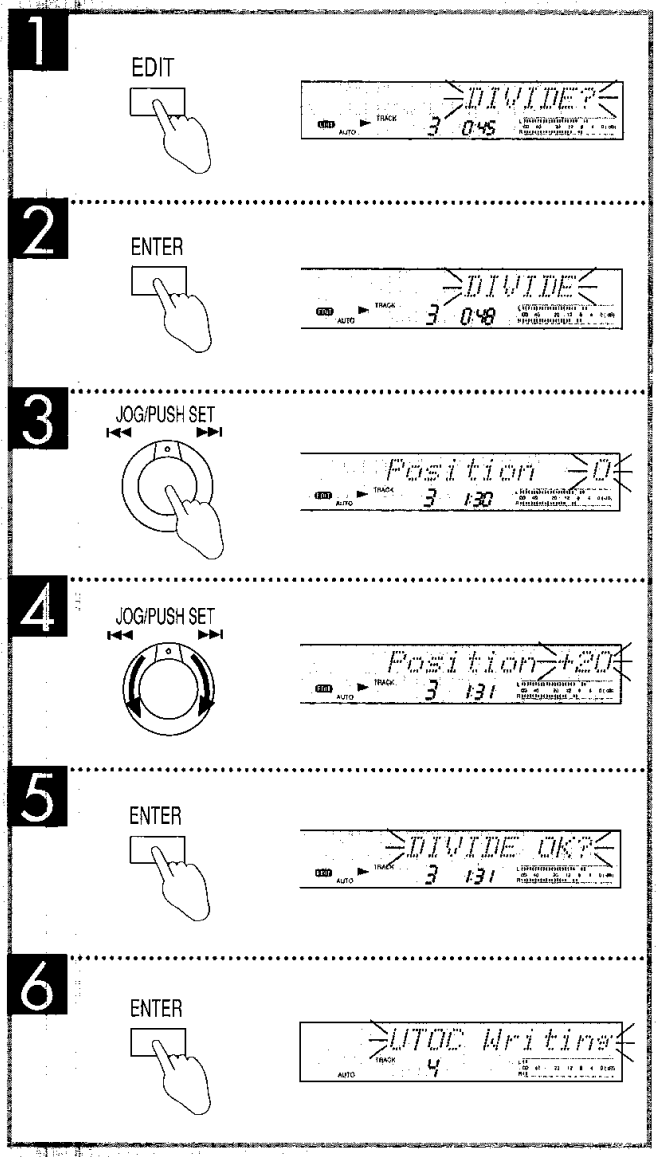

Dividing tracks - DIVIDE

This function allows you to manually add track marks.
This means you can edit a radio program you recorded, or divide symphony into its separate movements.

Make sure the disc is record enabled.

While the track you want to divide is playing

1 **Press [EDIT] to select "DIVIDE?"**
Each time the button is pressed: TRACK TITLE? → DIVIDI → MOVE? → COMBINE? → TRACK ERASE? → current display

2 **Press [ENTER].**
If the point you want to put the track mark at has already gone past, turn [JOG/PUSH SET] to return to the beginning of the track.
You can also select a different track at this point.

3 At the point you want to add the track mark:
Press [JOG/PUSH SET].
A four second segment of the track, beginning at the select point, is played repeatedly.

4 **Turn [JOG/PUSH SET] adjust the point.**
Adjustment can be made between –128 and +127, approxi mately 8 seconds either side of the original point.

5 **Press [ENTER].**
"DIVIDE OK?" appears on the display.
If you wish to cancel press [■] now.

6 **Press [ENTER].**
"UTOC Writing" appears on the display.
When this message disappears the track mark has been entered.
Play stops.

Stopping part way through
Press [■].

To remove the dividing track mark
Use the combine function.

Note
If a titled track is divided, the latter half becomes untitled.
There is no interruption to sound even if a track mark is added.

Downloaded from www.Manualslib.com manuals search engine

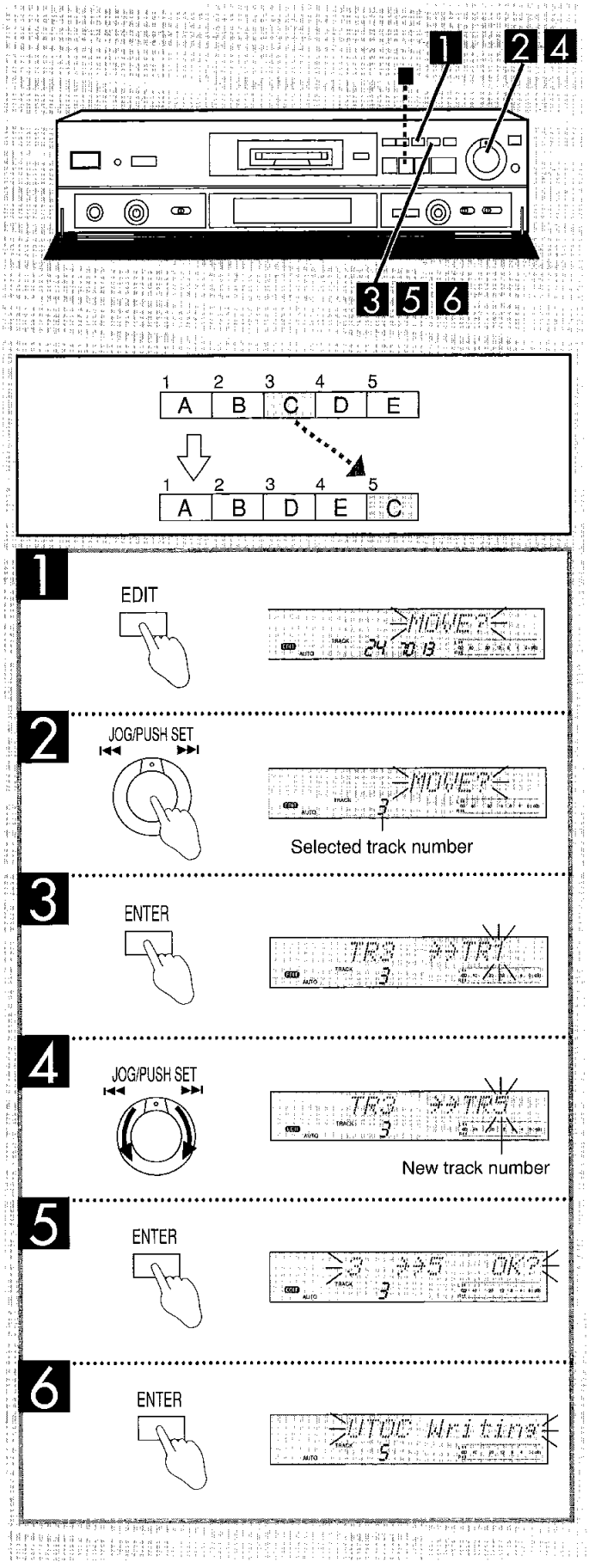

Moving tracks - MOVE

This function allows you to permanently change the order tracks are played in.

Make sure the disc is record enabled.

While stopped

1 Press [EDIT] to select "MOVE?"
Each time the button is pressed: TRACK TITLE? → DISC TITLE? → MOVE? → COMBINE? → TRACK ERASE? → ALL ERASE? → current display

2 Turn [JOG/PUSH SET] select the track to be moved.

3 Press [ENTER].

4 Turn [JOG/PUSH SET] select the position (track number) the track is to be moved to.
To move the track to position 5, track number "5" should be on the display.

5 Press [ENTER].
A message confirming your selection appears on the display. If you wish to cancel press [■] now.

6 Press [ENTER].
The move is confirmed after "UTOC Writing" disappears from the display.

To move a track while it is being played

This is useful when you want to make sure of the track you are moving.

While playing the track to be moved.
① Press [EDIT] to select "MOVE?"
Each time the button is pressed: TRACK TITLE? → DIVIDE? → MOVE? → COMBINE? → TRACK ERASE? → current display
② Press [ENTER].
③ Turn [JOG/PUSH SET] select the position (track number) the track is to be moved to.
④ Press [ENTER] twice.
The move is confirmed after "UTOC Writing" disappears from the display and play stops.

To cancel part way through
Press [■].

To return the track to its original position
Repeat the above steps, selecting the track's original position in step 4.

Downloaded from www.Manualslib.com manuals search engine

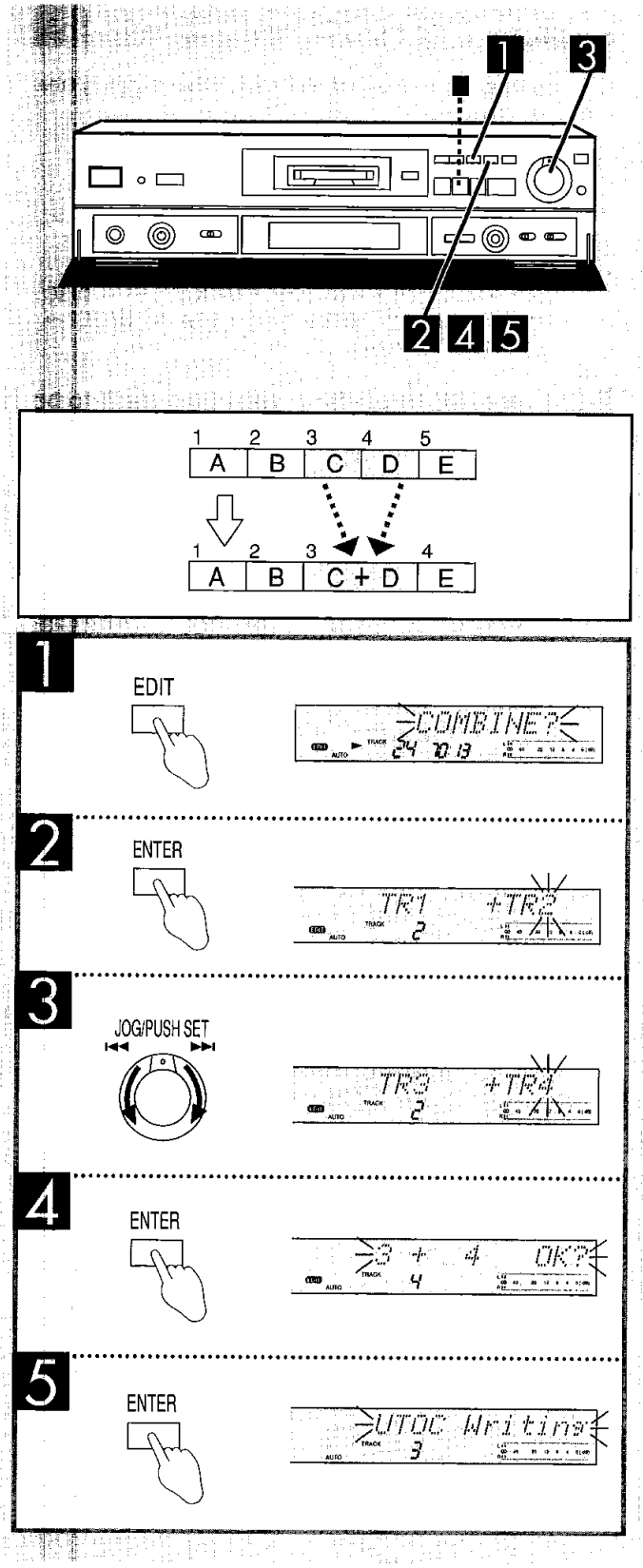

Combining tracks - COMBINE

This function removes a track mark so the two tracks either side of it effectively become one track.
This is useful to remove track marks that were unnessarily added during recording.

Make sure the disc is record enabled.

While stopped

1 **Press [EDIT] to select "COMBINE?"**
Each time the button is pressed: TRACK TITLE? → DISC TITLE? → MOVE? → COMBINE? → TRACK ERASE? → ALL ERASE? → current display

2 **Press [ENTER].**

3 **Turn [JOG/PUSH SET] select the two tracks to be combined.**

4 **Press [ENTER].**
A message confirming your selection appears on the display.
If you wish to cancel press [■] now.

5 **Press [ENTER].**
"UTOC Writing" appears on the display.
When this message disappears the track mark has been erased.

Combining tracks during play

This is useful to confirm the tracks you want to combine.

While playing the latter track
① Press [EDIT] to select "COMBINE?"
Each time the button is pressed: TRACK TITLE? → DIVIDE? → MOVE? → COMBINE? → TRACK ERASE? → current display

② Press [ENTER] three times.
"UTOC Writing" appears on the display.
When this message disappears the track mark has been erased.
Play stops.

To cancel part way through
Press [■].

To divide the tracks again
Use DIVIDE.

Note
A track recorded in stereo mode and a track recorded in mono mode cannot be combined.
If the two tracks both had titles, only the title of the first track remains after they are combined.

Downloaded from www.Manualslib.com manuals search engine

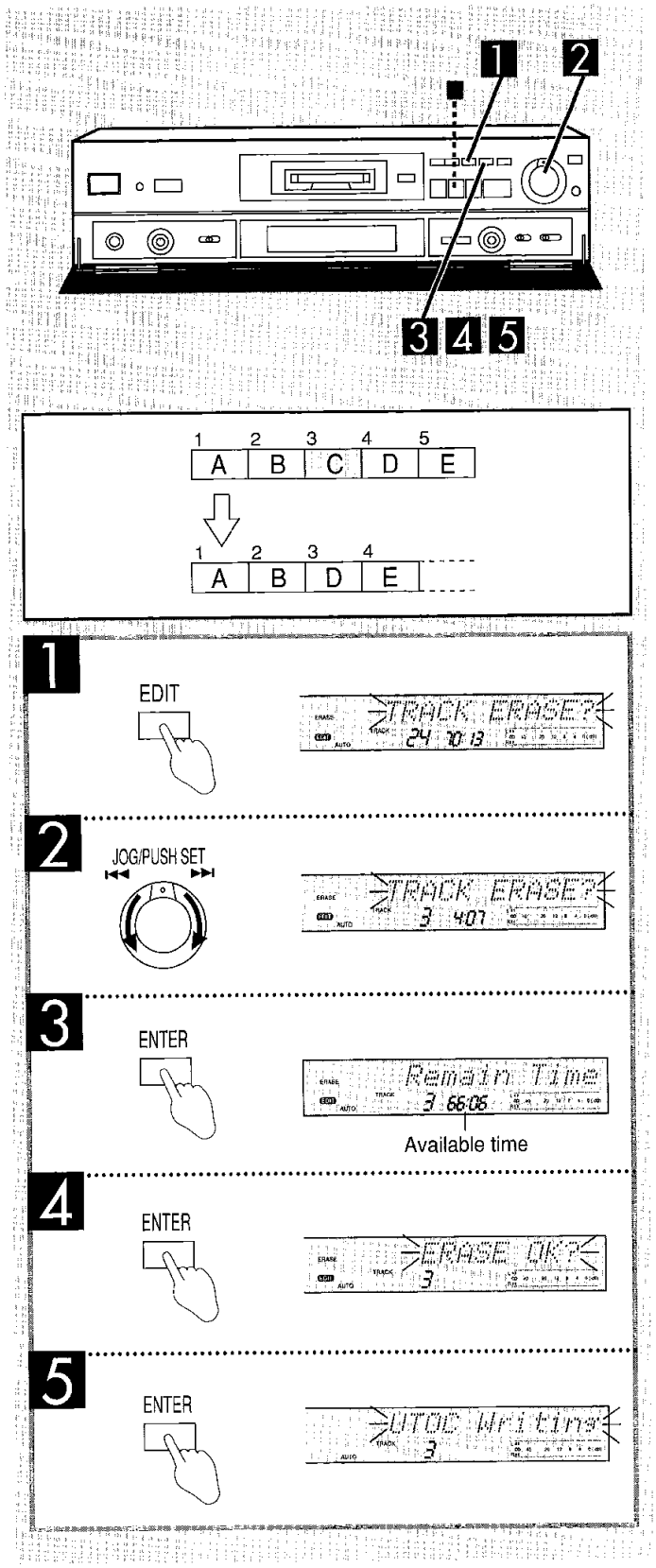

Erasing tracks

Unneeded tracks can be erased and the available recording time can be increased.

Make sure the disc is record enabled.

While stopped

1 Press [EDIT] to select "TRACK ERASE?"
Each time the button is pressed: TRACK TITLE? → DISC TITLE? → MOVE? → COMBINE? → TRACK ERASE? → ALL ERASE? → current display

2 Turn [JOG/PUSH SET] select the track to be erased.

3 Press [ENTER].
The amount of recording time available after the track is erased is shown on the display.

4 Press [ENTER].
A message confirming your selection appears on the display.
If you wish to cancel press [■] now.

5 Press [ENTER].
"UTOC Writing" appears on the display.
When this message disappears the track has been erased.

Erasing a track while it is being played

This is useful to check that the right track is erased.

While the track to be erased is being played.
① Press [EDIT] to select "TRACK ERASE?"
Each time the button is pressed: TRACK TITLE? → DIVIDE? → MOVE? → COMBINE? → TRACK ERASE? → current display
② Press [ENTER] three times.
"UTOC Writing" appears on the display.
When this message disappears the track has been erased.
Play stops.

To cancel part way through
Press [■]

Downloaded from www.Manualslib.com manuals search engine

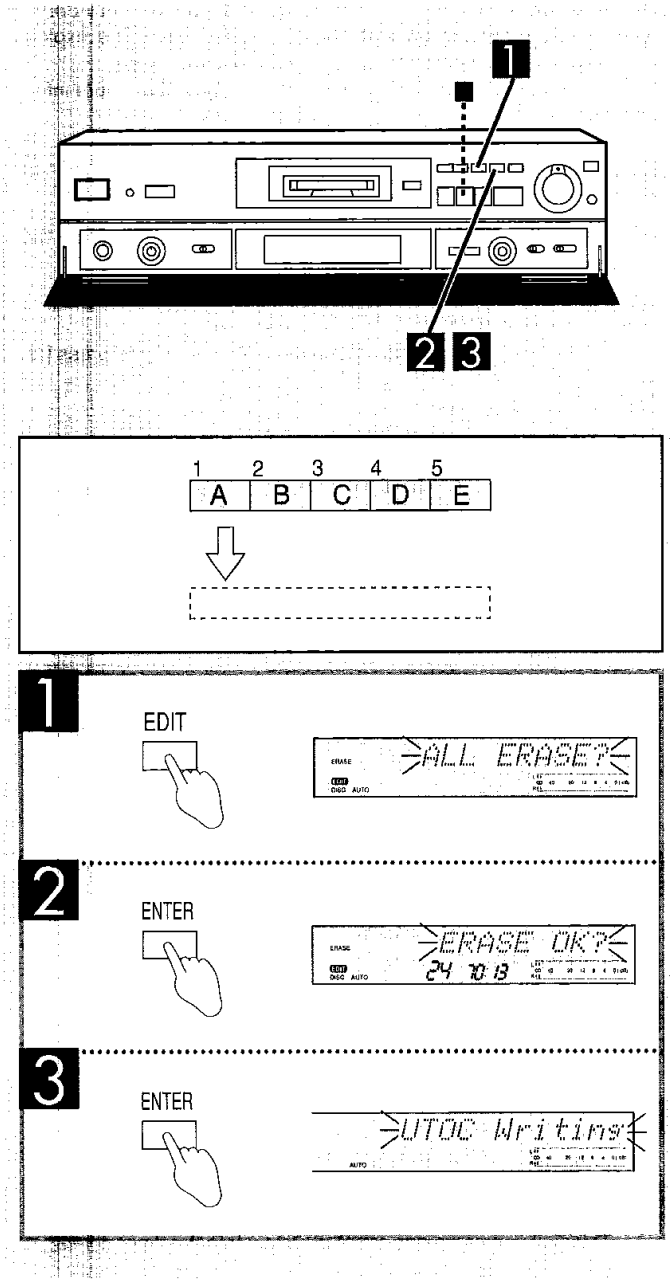

Erasing an entire MD

This operation creates a blank disc.

Make sure the disc is record enabled.

While stopped

1 Press [EDIT] to select "ALL ERASE?"
Each time the button is pressed: TRACK TITLE? → DISC TITLE? → MOVE? → COMBINE? → TRACK ERASE? → ALL ERASE? → current display

2 Press [ENTER].
A message confirming your selection appears on the display.
If you wish to cancel press [■] now.

3 Press [ENTER].
"UTOC Writing" appears on the display.
When this message disappears the MD has been erased.

To cancel part way through
Press [■]

Downloaded from www.Manualslib.com manuals search engine

■ Timer Recording and Playback

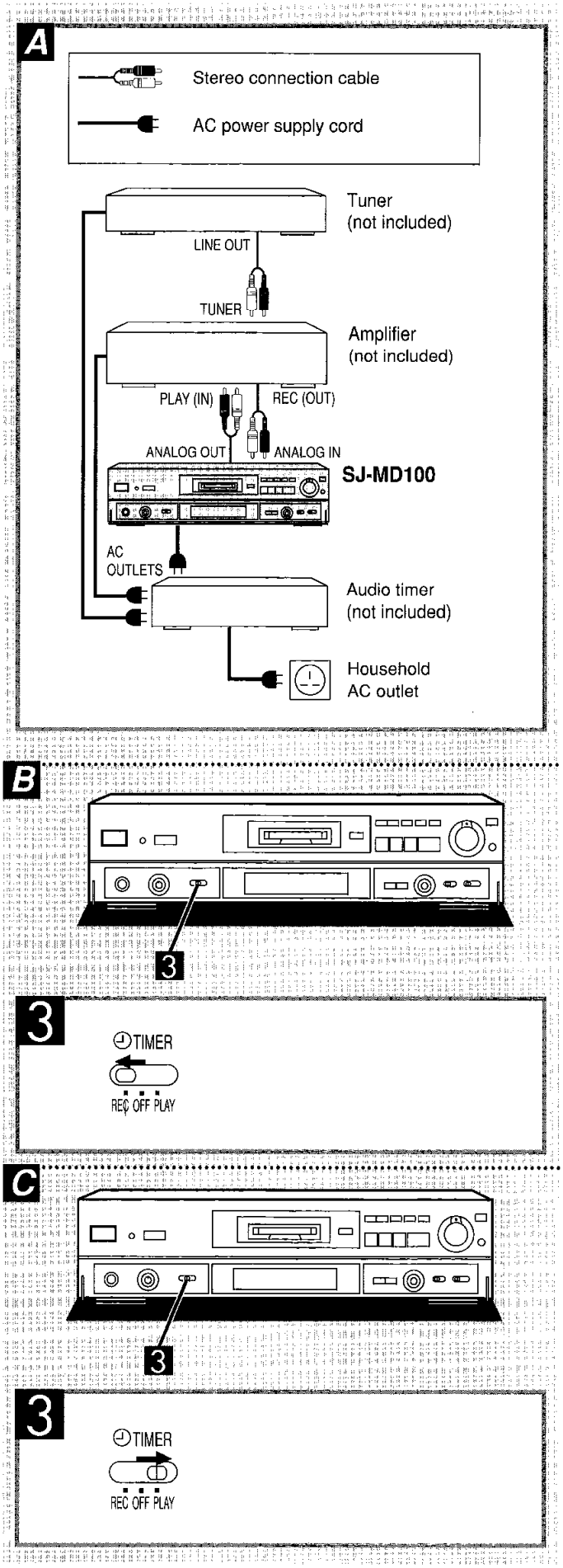

Use this unit in conjunction with an audio timer (not included) to record radio programs or start play a selected time. The explanations refer to the connection example in the illustration. A
See the operating instructions of the other equipment for more information.

Timer recording B

First turn all the equipment on. Set the tuner and amplifier up so the radio station you want to record is played.

1 Prepare this unit for recording.
Do steps 1 to 6 on Basic Recording Operations and press [■].

2 Set the timer.
The equipment connected to the timer goes off.
Set it to come on at least 30 seconds before recording is to begin and to go off at least 30 seconds after recording is to end.

3 Select "REC" with [◴TIMER].
This unit comes on and starts recording when the timer comes on.

Note
There will be a small delay between the timer coming on and the start of recording.

Timer playback C

Turn on this unit and the amplifier and set them up so the MD you want to hear is played.

1 Insert an MD.
If you want to play particular tracks when the timer comes on, program them.

2 Set the timer.
The equipment connected to the timer goes off.

3 Select "PLAY" with [◴TIMER].
This unit comes on and starts playing when the timer comes on.

Note
There will be a small delay between the timer coming on and the start of play.

Important
Make sure "OFF" is selected with [◴TIMER] when the timer is not being used.

Downloaded from www.Manualslib.com manuals search engine

■ Operation Checks and Component Replacement Procedures

NOTE **1. This section describes procedures for checking the operation of the major printed circuit boards and replacing the main components.**

2. For reassembly after operation checks or replacement, reverse the respective procedures. Special reassembly procedures are described only when required.

3. Select item from the following index when checks or replacement are required.

• Contents

■ Checking Procedures for each P.C.B. Page.

1. Checking for the main P.C.B.. . . . . 25.
2. Checking for the FL P.C.B. and operation (1) P.C.B.. . . . . 26.
3. Removal of the FL P.C.B., operation (1) P.C.B. and operation (2) P.C.B.. . . . . 26.
4. Removel of the power switch P.C.B. and sensor P.C.B.. . . . . 27.
5. Checking for the MD servo P.C.B.. . . . . 27,28.

■ Main Component Replacement Procedures

1. Replacement for the magnetic head and optical pickup. . . . . 29~31.
2. Replacement for the belt and loading motor ass'y. . . . . 31,32.
3. Replacement for the traverse motor ass'y. . . . . 32,33.

■ Checking Procedures for each P.C.B.

1. Checking for the main P.C.B.

Step 3
Remove the top cabinet.

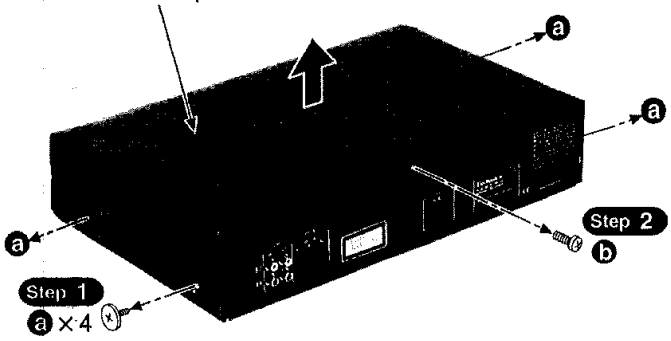

Step 5
Release the 2 claws, and then remove the rear panel.

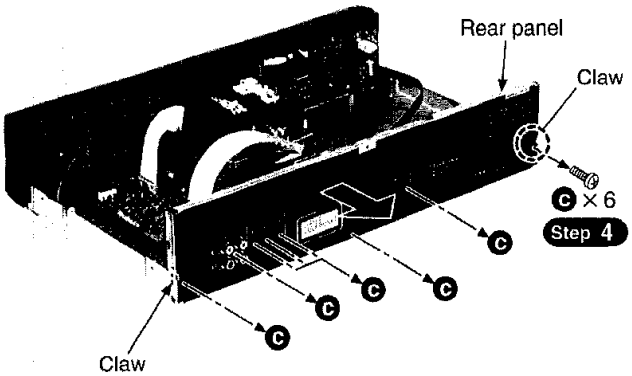

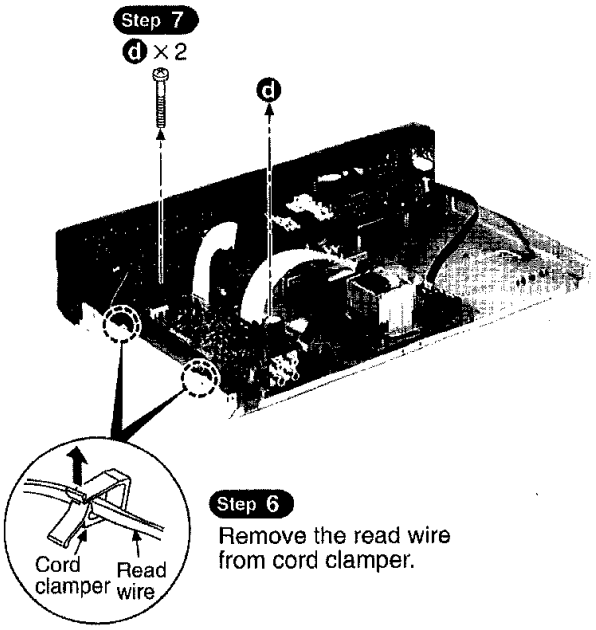

Step 6
Remove the read wire from cord clamper.

· Check the main P.C.B. as shown below.

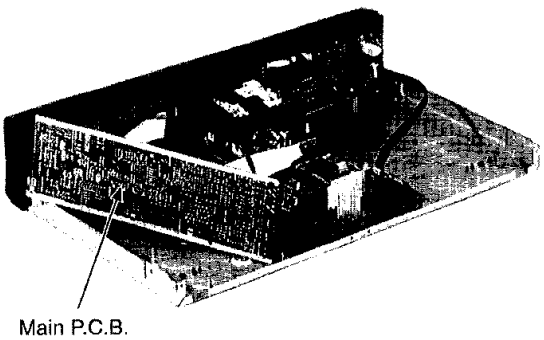

Downloaded from www.Manualslib.com manuals search engine

2. Cheking for the FL P.C.B. and operation (1) P.C.B.

· Follow the Step 1 ~ Step 3 of the item 1 in checking procedure for each P.C.B. on page 25.

Step 2
Release the 2 claws, and then remove the front panel ass'y.

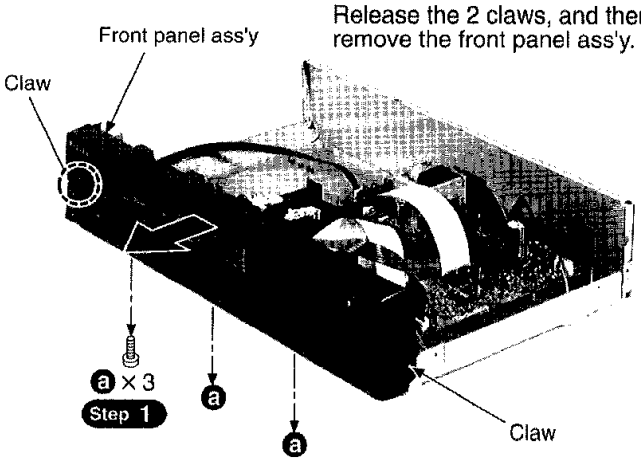

· **Check the FL P.C.B. and operation (1) P.C.B. as shown below.**

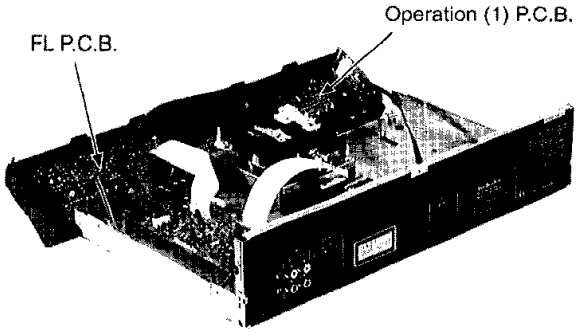

3. Removal of the FL P.C.B., operation (1) P.C.B. and operation (2) P.C.B.

· Follow the Step 1 ~ Step 3 of the item 1 in checking procedure for each P.C.B. on page 25.

· Follow the Step 1 ~ Step 2 of the item 2 in checking procedure for each P.C.B. on page 26.

Step 1
Remove the 3 connectors and FFC.

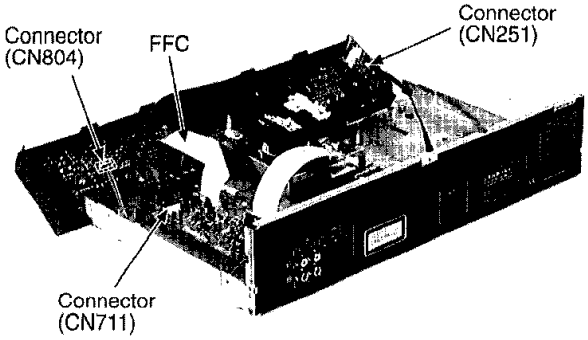

Step 2
Remove the rec level knob and phones level knob.

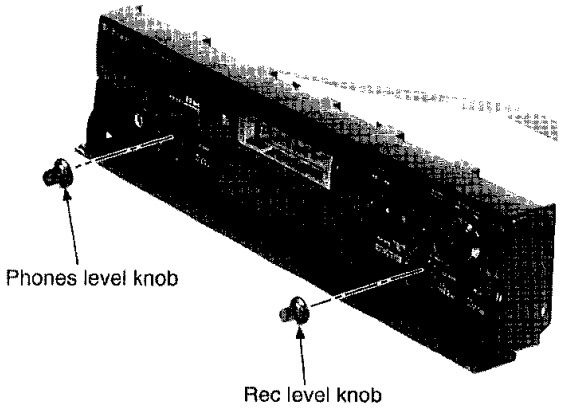

Step 4
Release the 2 claws, and then remove the operation (2) P.C.B..

Step 5
Remove the holder.

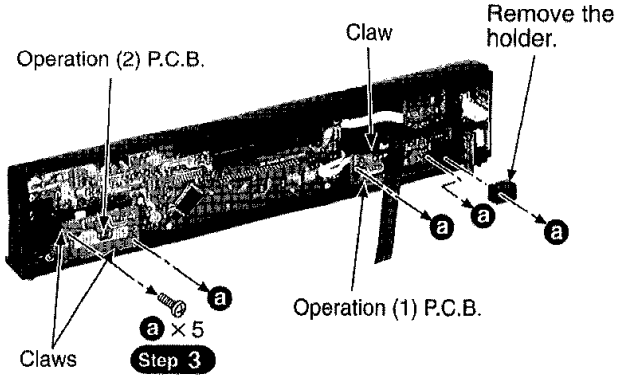

Step 6
Release the claw, and then remove the operation (1) P.C.B..

Step 7
Remove the job/push enter knob and nut.

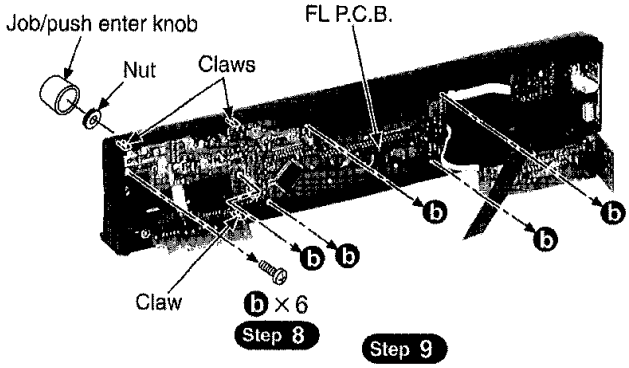

Step 9
Release the 3 claws, and then remove the FL P.C.B..

Downloaded from www.Manualslib.com manuals search engine

4. Removal of the power switch P.C.B. and sensor P.C.B.

- Follow the Step 1 ~ Step 3 of the item 1 in checking procedure for each P.C.B. on page 25.
- Follow the Step 1 ~ Step 2 of the item 2 in checking procedure for each P.C.B. on page 26.

Step 1

Relese the 2 screws (ⓐ) and claw (A), and then remove the power switch P.C.B..

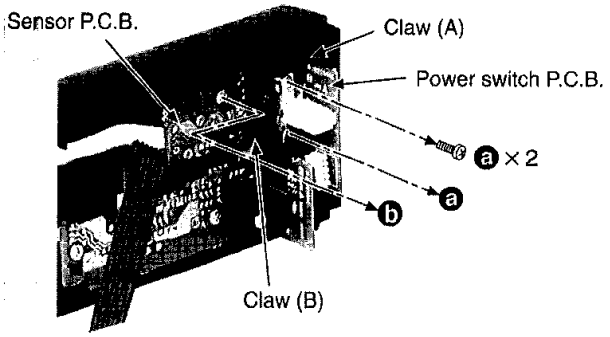

Step 2

Relese the screw (ⓑ) and claw (B), and then remove the sensor P.C.B..

5. Checking for the MD servo P.C.B.

- Follow the Step 1 ~ Step 3 of the item 1 in checking procedure for each P.C.B. on page 25.

⟨Checking for the MD servo P.C.B. (side A)⟩

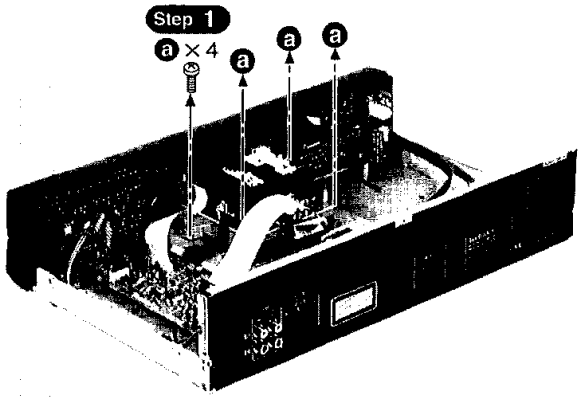

- **Check the MD servo P.C.B. (side A) as shown below.**

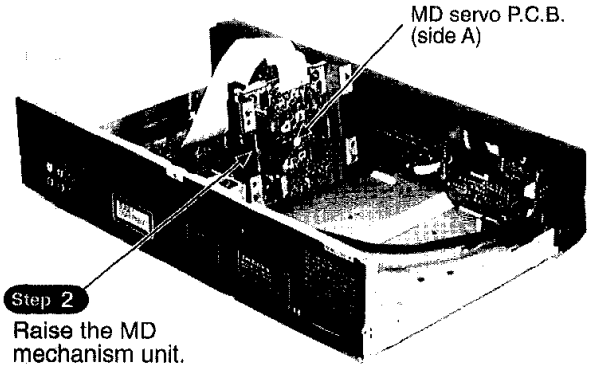

⟨Checking procedure for the MD servo P.C.B. (side B)⟩

- Two types of procedures for checking MD servo P.C.B. are as follows.

1. Use the test points on the side A of MD servo P.C.B.. (Only the IC1 can be checking correctly.)
2. With the extension cables, check the side B of MD servo P.C.B..

1. Checking procedure for MD servo P.C.B. (side A) by using the test points.

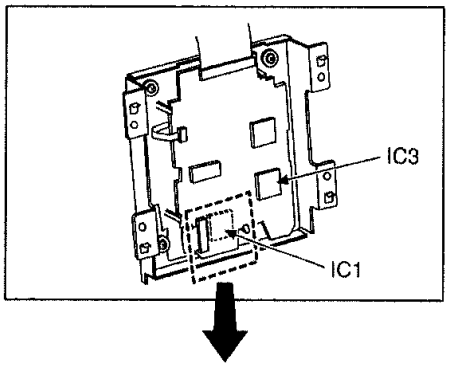

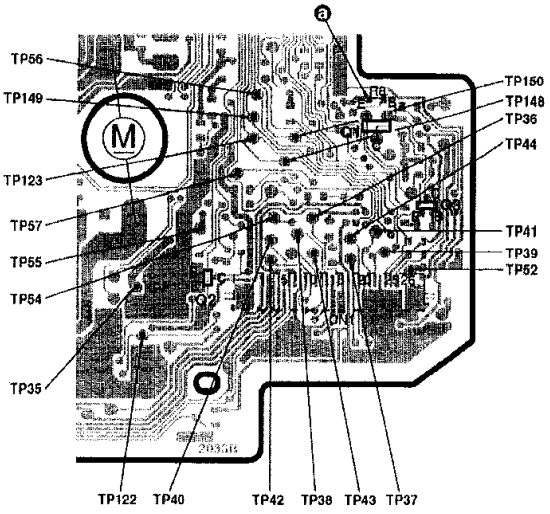

Pin No. of IC1	Test point	Pin No. of IC1	Test point
2PIN	Left side of R8 (ⓐ)	32PIN	TP52
5PIN	TP54	36PIN	Equivalent for pin 16 of IC3
11PIN	TP55	37PIN	TP35
16PIN	TP57	38PIN	TP44
21PIN	TP56	39PIN	TP37
26PIN	TP36	40PIN	TP38
27PIN	TP150	41PIN	TP43
28PIN	TP149	44PIN	TP42
29PIN	TP148	45PIN	TP40
30PIN	TP123	46PIN	TP39
31PIN	TP122	47PIN	TP41

(The waveforms are noted on the schematic diagram.)

Downloaded from www.Manualslib.com manuals search engine

2. Checking procedure for MD servo P.C.B. (side B) by using the extension cables.

Extension cable kit. [RFKZJMD100EK]

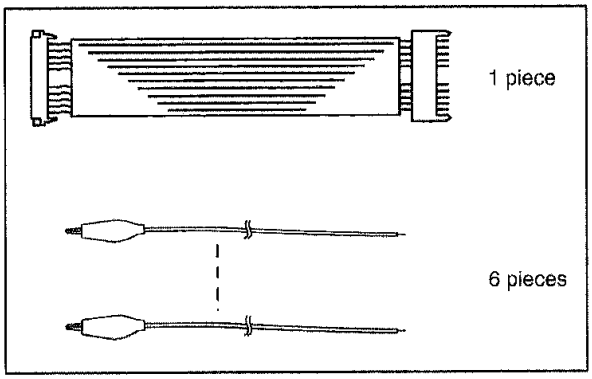

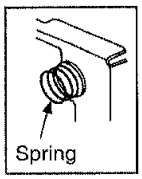

NOTE

Take care not loose the spring when removing the angle.

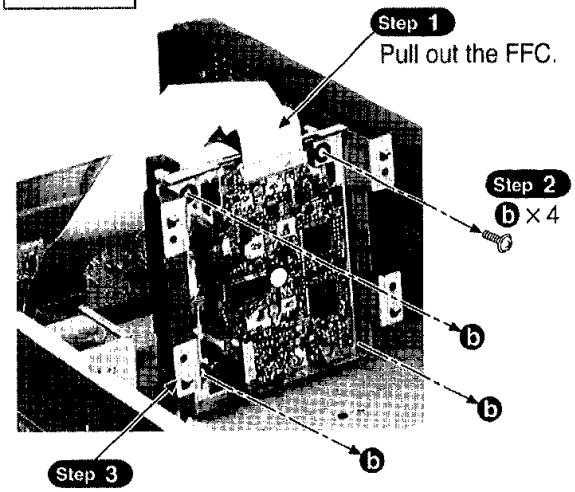

Remove the angle.

Step 5

Unsolder the motor terminals (6 points).

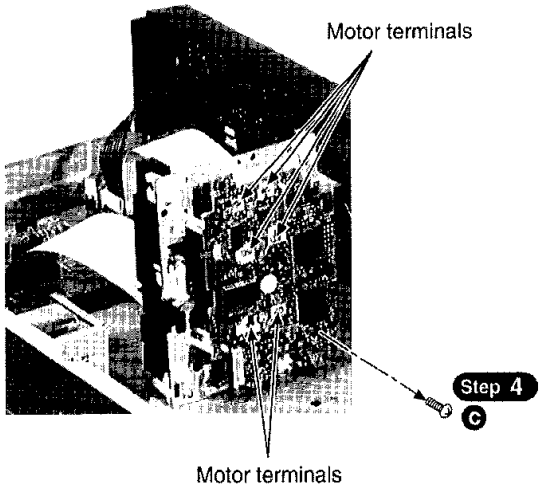

Step 6

Release the 4 claws.

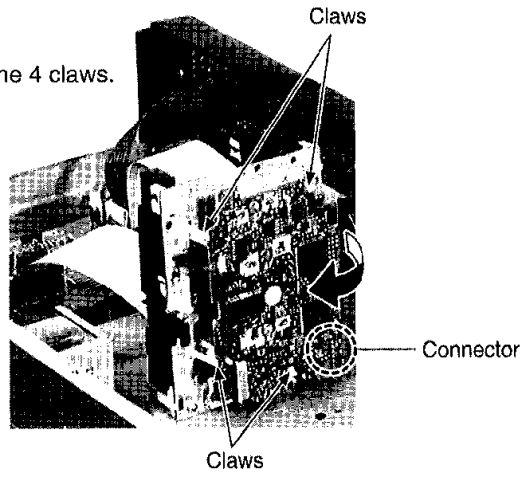

Step 7

Remove the connector, and then open the MD servo P.C.B. in the direction of arrow.

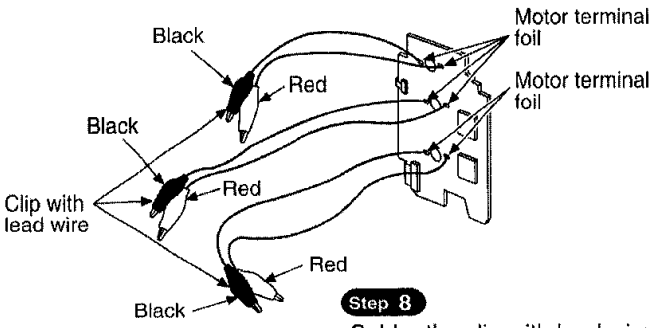

Step 8

Solder the clip with lead wire to the motor terminal foil

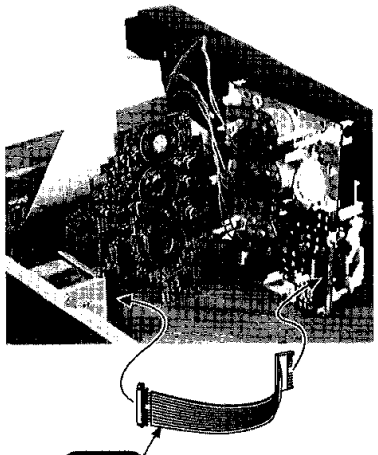

Step 9

Connect the clip to the motor terminals. (6 points)

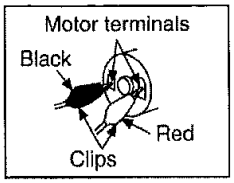

NOTE

Handle with care the polarity to connect the terminal when installing the motor.

Step 10

Connect the extension cable to the connector.

· Check the MD servo P.C.B. (side B) as shown below.

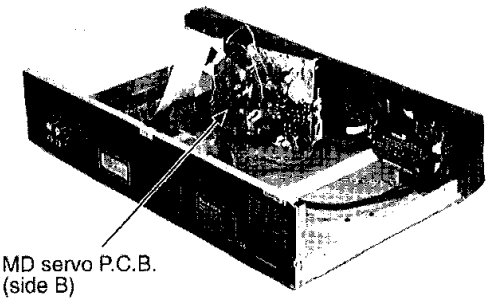

Downloaded from www.Manualslib.com manuals search engine

■ Main Component Replacement Procedures

1. Replacement for the magnetic head and optical pickup

· Follow the Step 1 ~ Step 3 of the item 1 in checking procedure for each P.C.B. on page 25.

Step 1

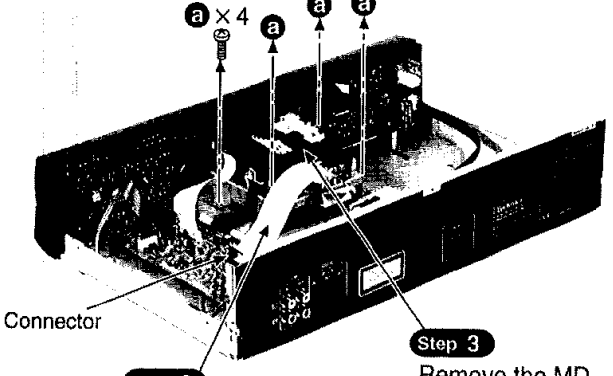

Step 4

Remove the 2 FFCs from the connector.

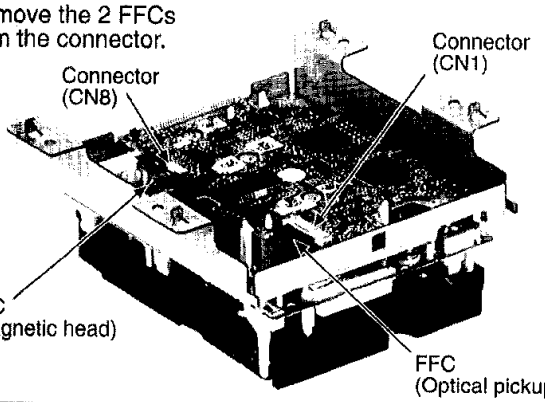

NOTE

Insert a short pin into the traverse unit FFC borad. (Refer to "Handling Precautions for Traverse deck" on page 2.)

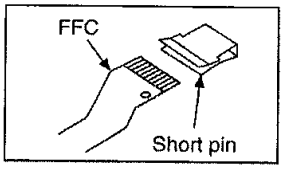

Step 6

Release the 2 claws, and then lift up the holder ass'y.

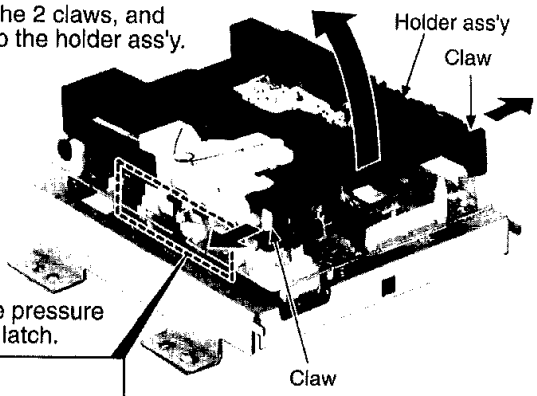

Step 5

Remove the pressure spring from latch.

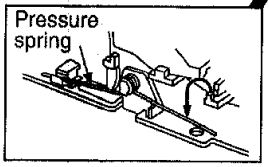

NOTE

When installing the holder ass'y, the pressure spring should be latched correctly.

Step 7

Set the holder ass'y and MD mechanism unit at a 60 degree angle.

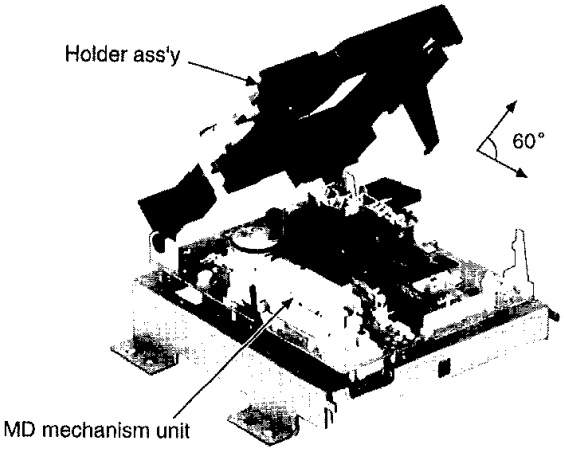

Step 8

Pull out the holder ass'y.

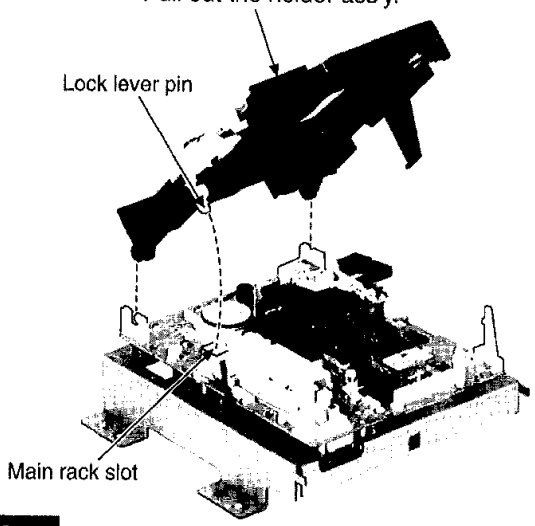

NOTE

When installing the holder ass'y, align the lock lever pin with the main rack slot.

Step 9

ⓑ

Step 10

Remove the magnetic head [RED0047-1].

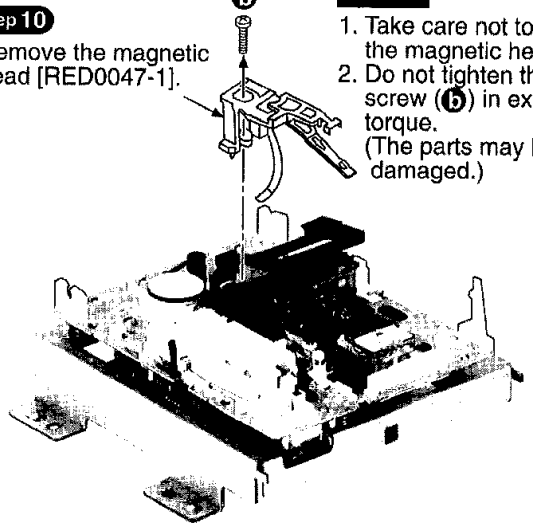

NOTE

1. Take care not to damage the magnetic head.
2. Do not tighten the set screw (ⓑ) in excessive torque. (The parts may be damaged.)

Downloaded from www.Manualslib.com manuals search engine

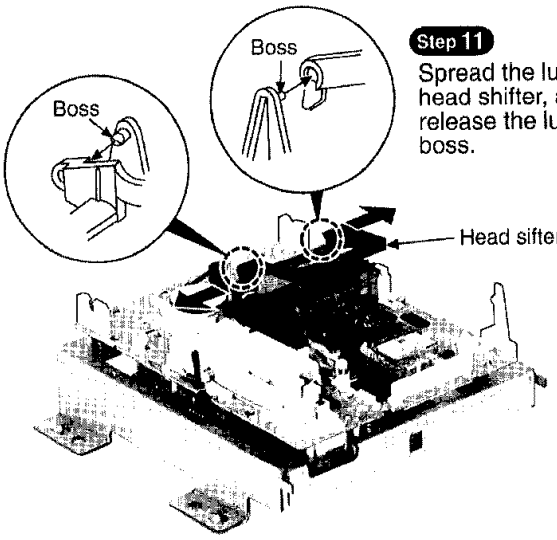

Step 11
Spread the lugs of head shifter, and then release the lugs from boss.

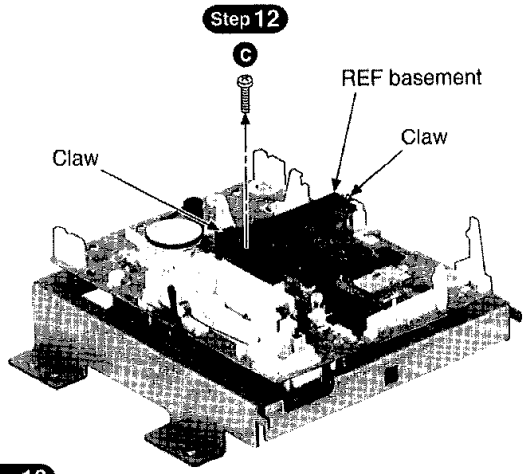

Step 12

Step 13
Release the 2 claws, and then remove the REF basement.

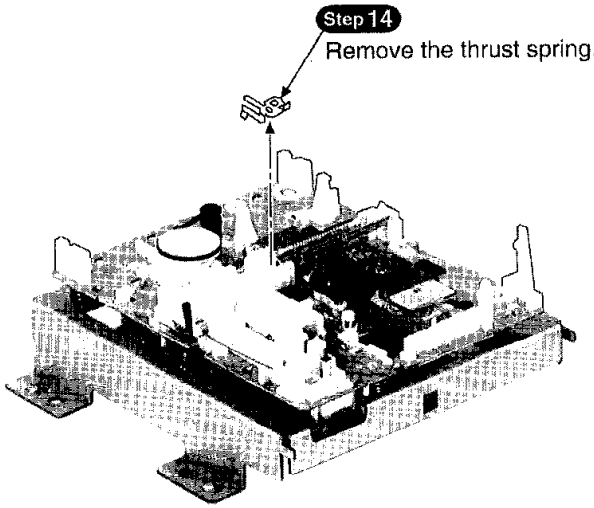

Step 14
Remove the thrust spring.

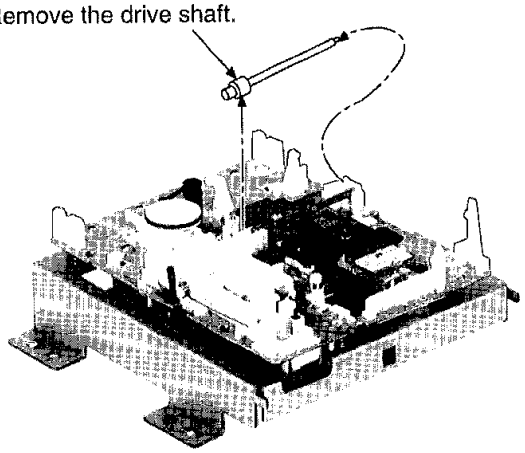

Step 15
Remove the drive shaft.

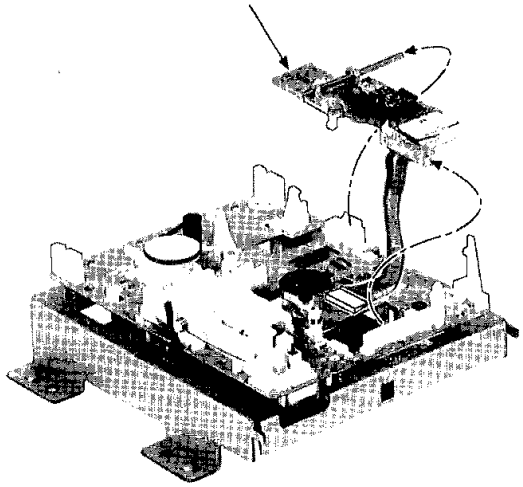

Step 16
Remove the optical pickup ass'y.

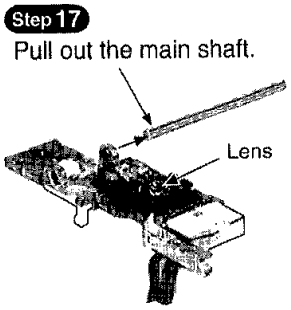

Step 17
Pull out the main shaft.

NOTE
1. Use care to prevent damage the optical pickup, due to the precision construction.
2. Do not apply the grease on the lens of optical pickup.
3. Do not touch the lens of the optical pickup.

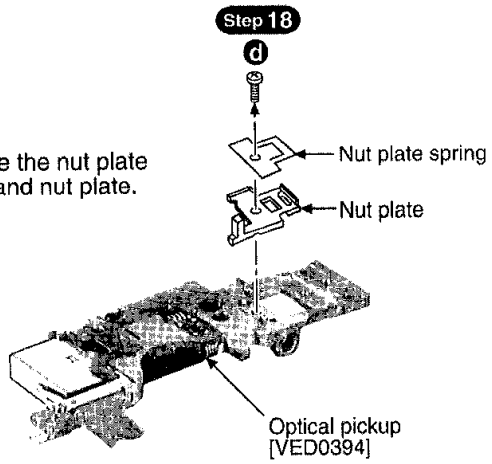

Step 18

Step 19
Remove the nut plate spring and nut plate.

Downloaded from www.Manualslib.com manuals search engine

Notice for installing the optical pickup

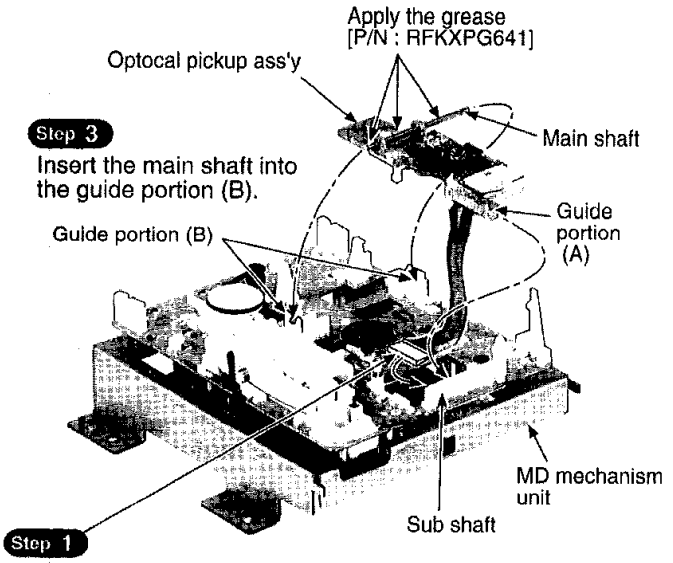

Step 3
Insert the main shaft into the guide portion (B).

Step 1
Pass the FFC through the slot of MD mechanism unit.

Step 2
Align the guide portion (A) of optical pickup with the sub shaft.

NOTE
Take care not to bend the FFC.

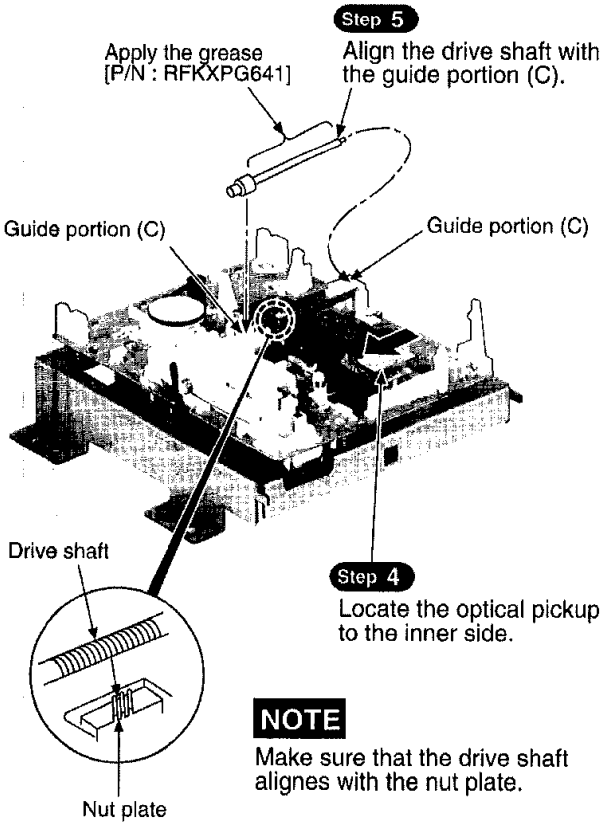

Step 4
Locate the optical pickup to the inner side.

NOTE
Make sure that the drive shaft alignes with the nut plate.

2. Replacement for the belt and loading motor ass'y

· Follow the Step 1 ~ Step 3 of the item 1 in checking procedure for each P.C.B. on page 25.

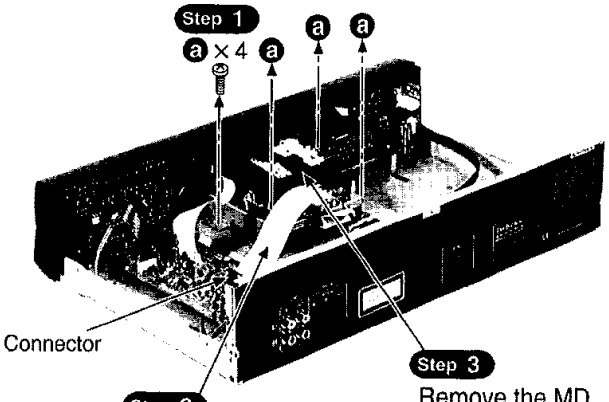

Step 2
Pull out the FFC from the connector.

Step 3
Remove the MD mechanism unit.

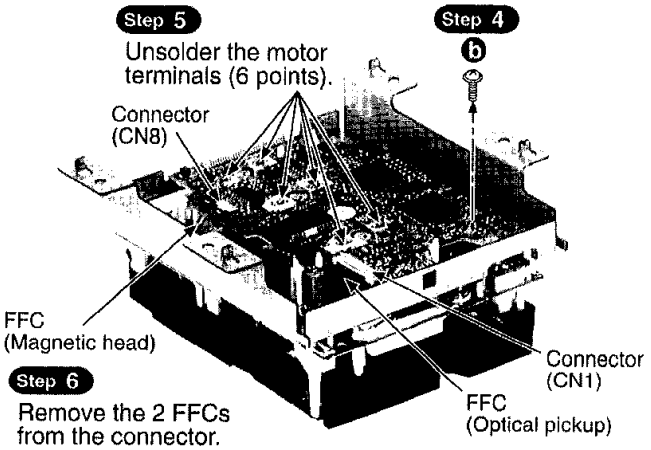

Step 6
Remove the 2 FFCs from the connector.

NOTE
Insert a short pin into the traverse unit FFC borad.
(Refer to "Handling Precautions for Traverse deck" on page 2.)

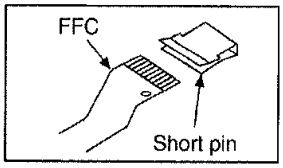

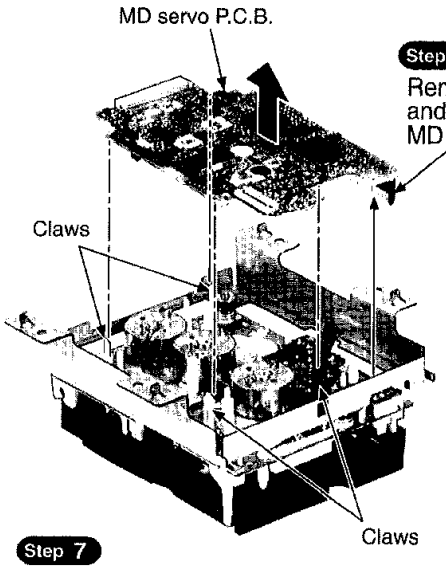

Step 8
Remove the connector, and then remove the MD servo P.C.B..

Step 7
Release the 4 claws.

Downloaded from www.Manualslib.com manuals search engine

Step 10
Release the 2 claws, and then lift up the holder ass'y.

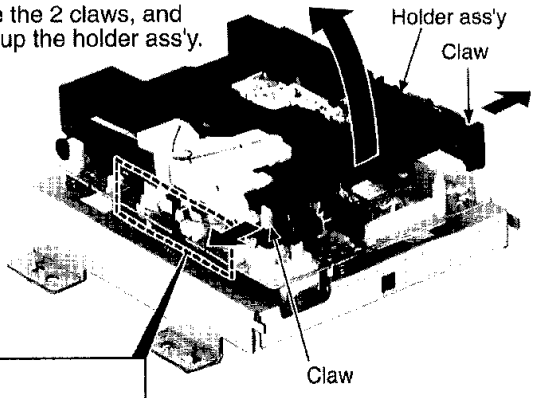

Step 9
Remove the pressure spring from latch.

Step 11
Set the holder ass'y and MD mechanism unit at a 60 degree angle.

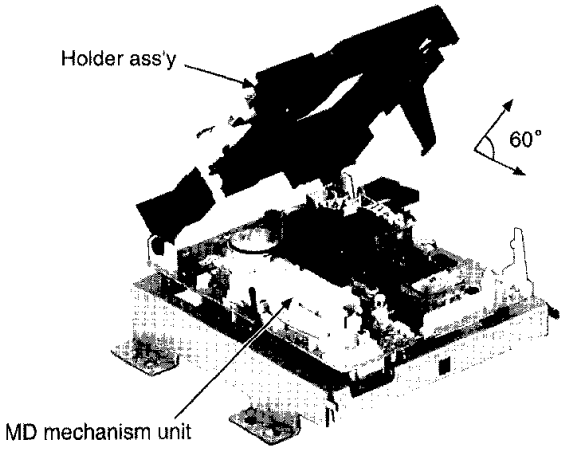

Step 12
Pull out the holder ass'y.

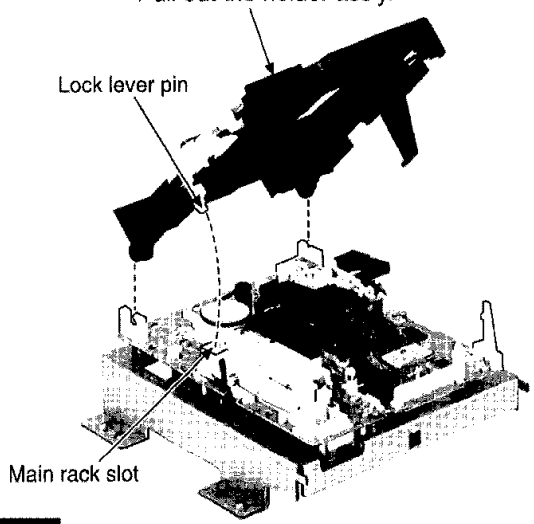

NOTE
When installing the holder ass'y, align the lock lever pin with the main rack slot.

Step 13
Remove the belt [RDV0055].

Step 14
ⓒ×2

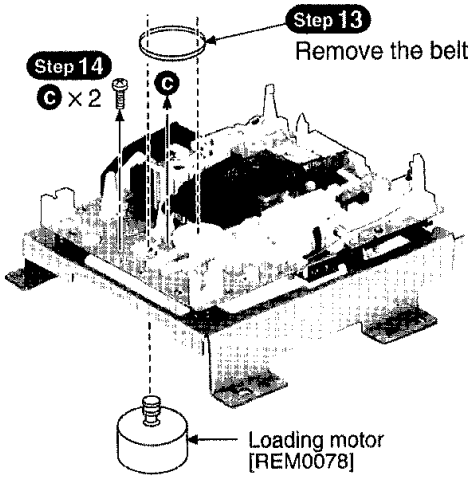

Notice for installing the loading motor ass'y

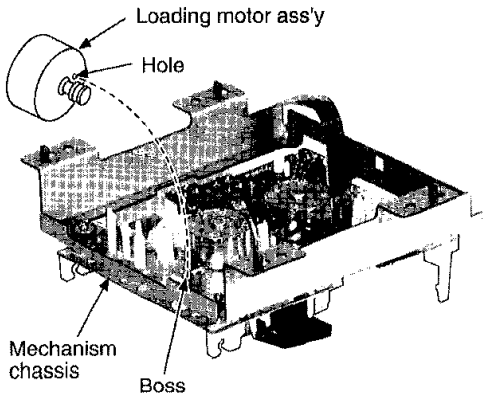

- Align the hole of loading motor ass'y with the boss of mechanism chassis, and then install the loading motor ass'y

3. Replacement for the traverse motor ass'y

- Follow the **Step 1** ~ **Step 3** of the item 1 in checking procedure for each P.C.B. on page 25.
- Follow the **Step 1** ~ **Step 11** of the item 2 in main component replacement procedures on pages 31 and 32.

Step 1
ⓐ

Step 2
Remove the magnetic head [RED0047-1].

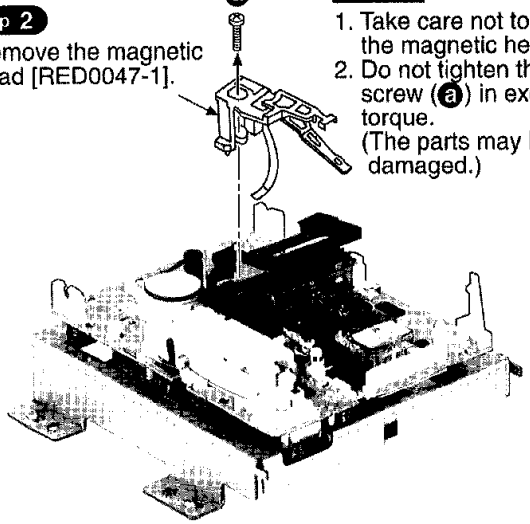

NOTE
1. Take care not to damage the magnetic head.
2. Do not tighten the set screw (ⓐ) in excessive torque. (The parts may be damaged.)

Downloaded from www.Manualslib.com manuals search engine

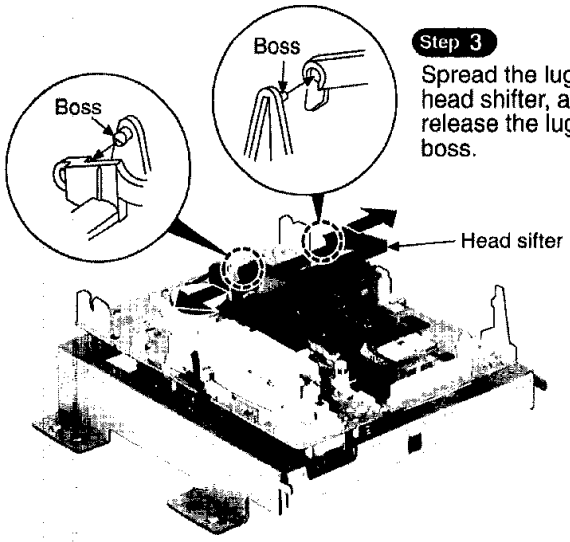

Step 3

Spread the lugs of head shifter, and then release the lugs from boss.

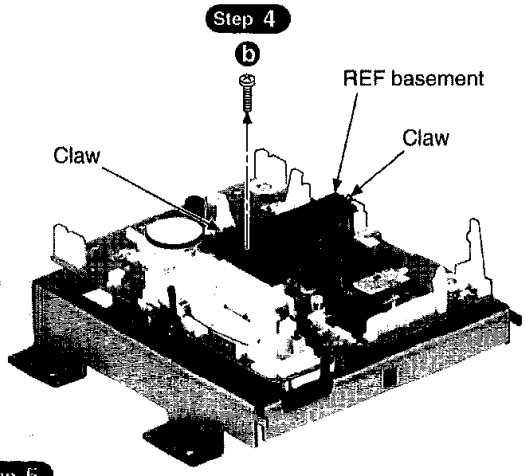

Step 4

Step 5

Release the 2 claws, and then remove the REF basement.

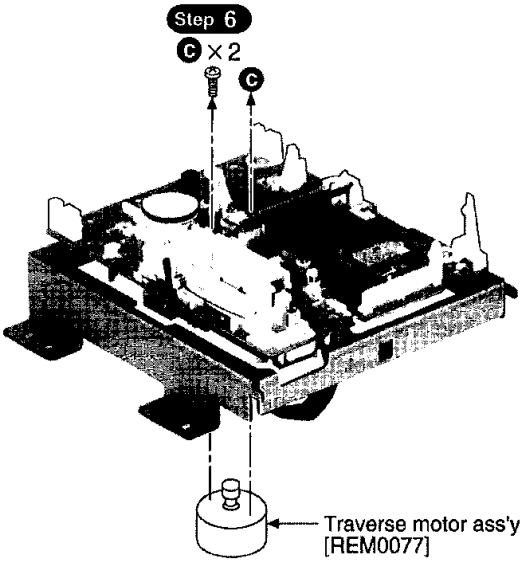

Step 6

Notice for installing the traverse motor ass'y

- Align the hole of traverse motor ass'y with the boss of mechanism chassis, and then install the traverse motor ass'y

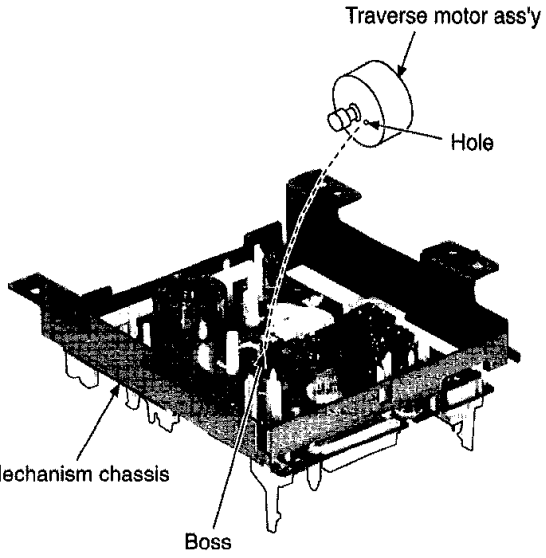

Downloaded from www.Manualslib.com manuals search engine

■ Self-Diagnostic Function

This unit is equipped with a self-diagnostic function which, in the event of a malfunction, automatically display a code indicating the nature of the malfunction. Use this self-diagnostic function when servicing the unit.

Switching to the Self-Diagnostic Mode

1. Turn the power on.
2. Press and hold the STOP button (■) for at least 2 seconds. and while still pressing the STOP button (■), press the FWD SEARCH button (►►) for at least 2 seconds. (Shown in **Fig.1**) The unit enters Self-Diagnostic Mode and is displayed "MD TEST". Then an error code is displayed, if any. For details of the error codes, see **Table 1**.
3. If more than one error exists, the display will sequentially show the respective error codes each time the FWD SEARCH button (►►) is pressed.

Canceling the Self-Diagnostic Mode

1. The Self-Diagnostic Mode can be canceled by pressing the POWER button (POWER) to turn the system off. And then pressing the power button again to turn it again.

Clearing the Self-Diagnostic Mode

1. The contents of abnormality display are stored in memory. In order to clear the memory, continue to press the STOP button (■) for at least 5 seconds while in the Self-Diagnostic Mode, The memory will clear. Always be sure to clear this memory after completing repair.

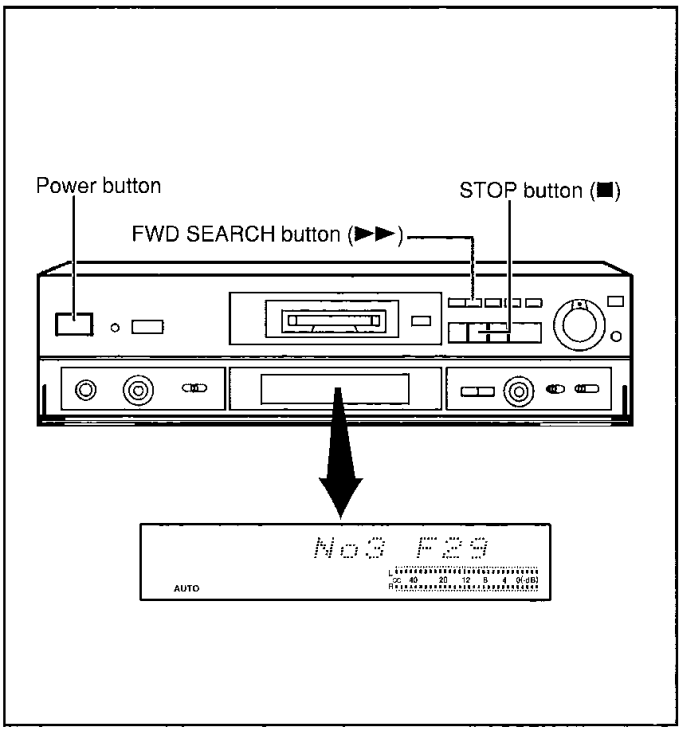

Fig. 1

Error Code	Symptom	Possible Cause
F15	Interval till MD starts playing is too long.	• Pickup home position sense switch (S8) is defective; check and replace if necessary.
F26	MD is loaded but cannot be played.	• Communications error between the servoprocessor IC and the microprocessor IC (system control). Check if the flexible circuit board is disconnected. • Displayed when the disc is scratched too.
F28	MD cannot be loaded.	• Confirm that the disc is not catching on anything. • The connection (flexible circuit board or connector cable) between the MD unit and the MD servo circuit board is disconnected or damaged; check and replace if necessary. • The MD unit may be malfunctioning; replace it.
F29	MD cannot be ejected.	• Confirm that the disc is not catching on anything. • The connection (flexible circuit board or connector cable) between the MD unit and the MD servo circuit board is disconnected or damaged; check and replace if necessary. • The MD unit may be malfunctioning; replace it.

Table 1

Downloaded from www.Manualslib.com manuals search engine

■ Self Check Function

This unit is equipped with a self check function which can detect a part of malfunction. Use this function before servicing the unit and check the item as shown below.

• Setting to the Self Check Function

1. Turn the power on.
2. Press and hold the STOP button (■) for at least 2 seconds. and while still pressing the STOP button (■), press the REV. SEARCH button (◄◄) for at least 2 seconds. Then the unit enters Self Check Function.

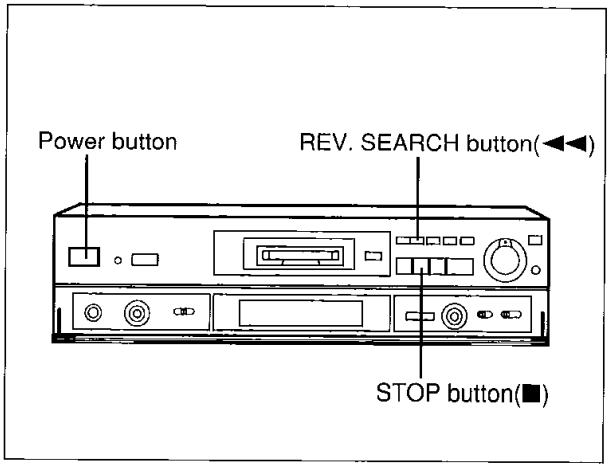

fig. 1

• Checking the operation switches

1. When the unit enters the Self Check Function, the FL display turn off.
2. Press the buttons on the unit except the POWER button , it displays "–" mark adapted each buttons. (**Fig. 2 and 3** is shown about a allotment.)

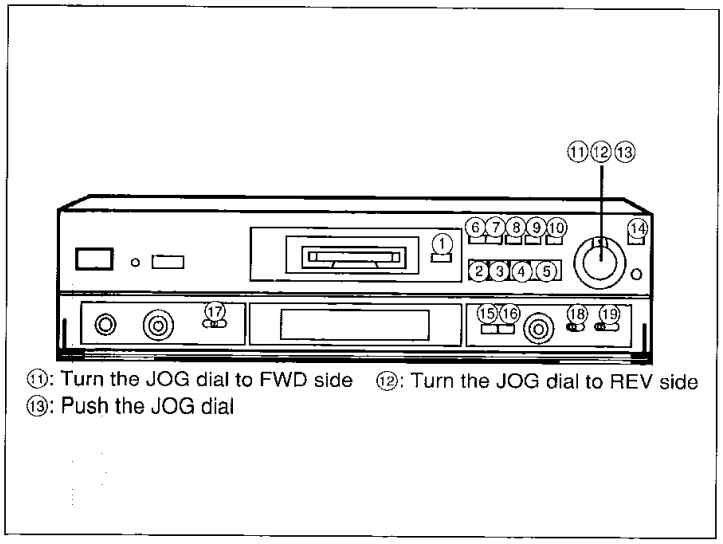

fig. 2

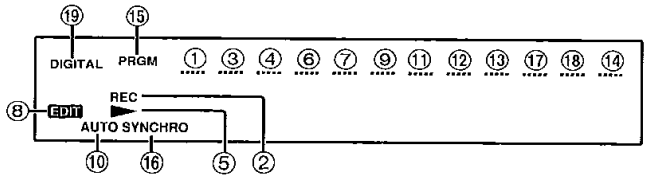

fig. 3

• Checking the FL display

1. All buttons works normally except the POWER button, FL display and LED turns on and off at 0.5 second interval. (See the **fig. 4, 5**)

   The Self Check Function can be canceled by pressing the POWER button (POWER) or pressing and holding the STOP button (■) for at least 2 seconds.



fig. 4

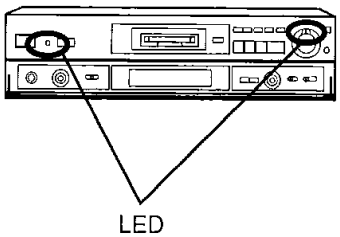

fig. 5

Downloaded from www.Manualslib.com manuals search engine

■Schematic Diagram

	Page
A MD SERVO CIRCUIT	37 – 42
B SWITCH CIRCUIT	37
C FL CIRCUIT	43 – 44
D SENSOR CIRCUIT	43
E MAIN CIRCUIT	45 – 48
F OPERATION (2) CIRCUIT	48
G OPERATION (1) CIRCUIT	48
H HEADPHONES JACK CIRCUIT	48
I POWER SW CIRCUIT	48
J POWER TRANSFORMER CIRCUIT	48

• This schematic diagram may be modified at any time with the development of new technology.

Notes:

- **S1** : Write protect tab detect switch.
- **S2** : ROM/RAM Disc detect switch.
- **S3** : PLAY•REC/PLAY mode detect switch.
- **S4** : DISC IN detect switch.
- **S5** : PLAY/REC mode detect swith.
- **S6** : PLAY mode detect switch.
- **S7** : Disc loading detect switch.
- **S8** : Rest detect switch.
- **S901,902** : Search (S901:◄◄ S902:►►) switch. (◄◄,►► SEARCH)
- **S903** : Editing mode switch. (EDIT)
- **S904** : Enter switch used in editing. (ENTER)
- **S905** : Track mark mode select/Character skip switch. (TRACK MARK/CHARA SKIP)
- **S906** : Display mode select/ Character select switch. (DISP/CHARA)
- **S907** : Eject switch. (⏏ EJECT)
- **S908** : Stop switch. (■)
- **S909** : Pause switch. (II)
- **S910** : Playback/recording start switch. (►)
- **S911** : Record switch. (●)
- **S912** : Syncro-record switch. (SYNCRO REC)
- **S913** : Playback mode select switch. (PLAY MODE)
- **S251** : Unit on/off switch. (▙⏻ ▂⏻/I)
- **S901A** : Timer mode select switch. (🕘 TIMER)
- **S902A** : Input mode select switch. (INPUT)
- **S903A** : Recording mode select switch. (REC MODE)
- **VR1** : Laser power adjustment VR.
- **VR801** : Headphones level control VR. (PHONES LEVEL)
- **VR851** : Recording level control VR. (REC LEVEL)
- **VR901** : JOG/skip VR. (JOG/PUSH. SET I◄◄,►►I)

• Indicated voltage values are the standard values for the unit measured by the DC electronic circuit tester (high-impedance) with the chassis taken as standard. Therefore, there may exist some errors in the voltage values, depending on the internal impedance of the DC circuit tester.

No mark : MD STOP ( ) : MD PLAY < > : MD REC

• Important safety notice:
Components identified by ⚠ mark have special characteristics important for safety.
Furthermore, special parts which have purposes of fire-retardant (resistors), high-quality sound (capacitors), low-noise (resistors), etc. are used.
When replacing any of components, be sure to use only manufacturer's specified parts shown in the parts list.

• **Caution!**
IC and LSI are sensitive to static electricity.
Secondary trouble can be prevented by taking care during repair.
Cover the parts boxes made of plastics with aluminum foil.
Ground the soldering iron.
Put a conductive mat on the work table.
Do not touch the legs of IC or LSI with the fingers directly.

• **Voltage and signal line**

: Positive voltage line

: Negative voltage line

: MD play signal line

: MD rec signal line

Downloaded from www.Manualslib.com manuals search engine

SCHEMATIC DIAGRAM-1

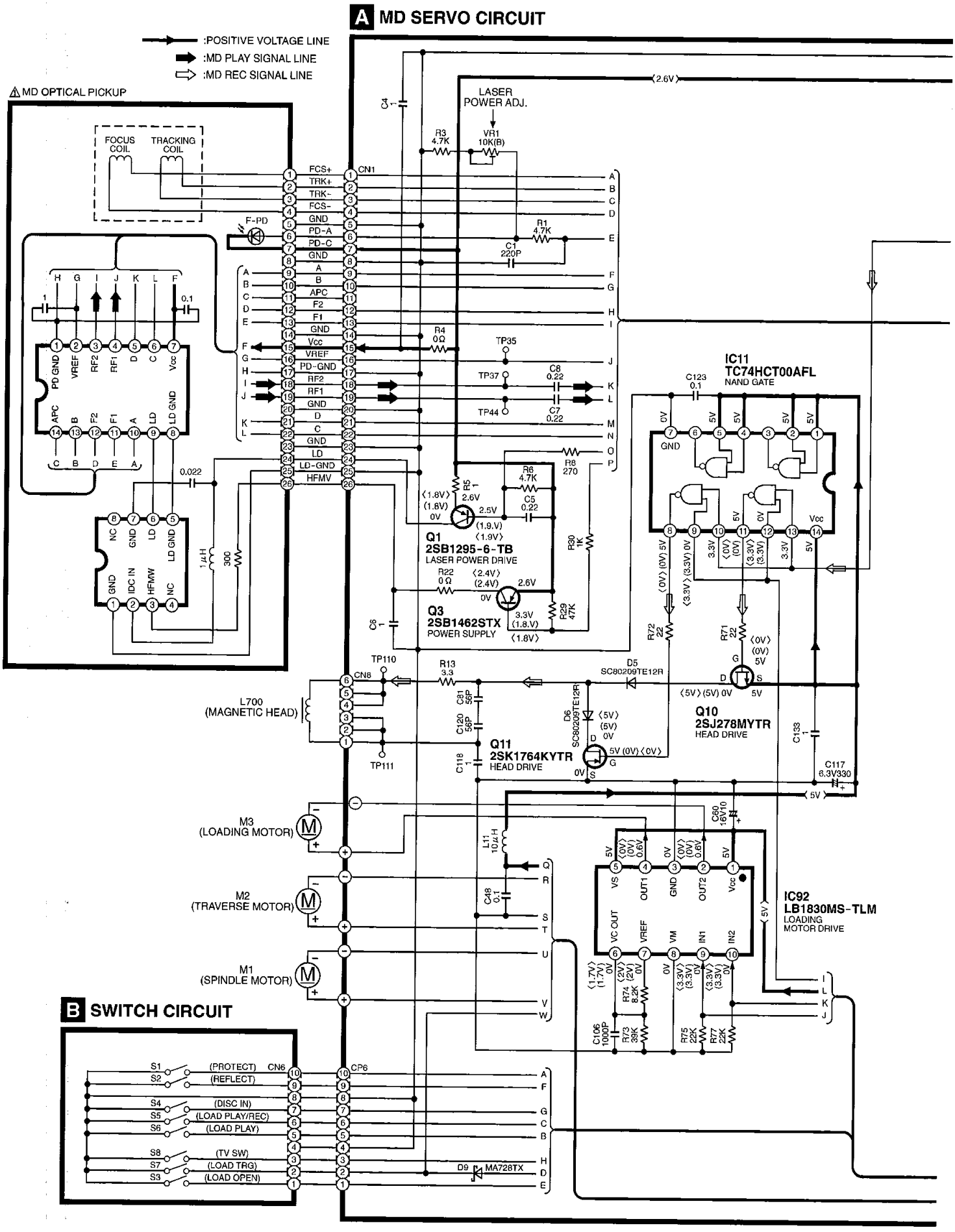

Downloaded from www.Manualslib.com manuals search engine

SCHEMATIC DIAGRAM-2

:POSITIVE VOLTAGE LINE :MD PLAY SIGNAL LINE :MD REC SIGNAL LINE

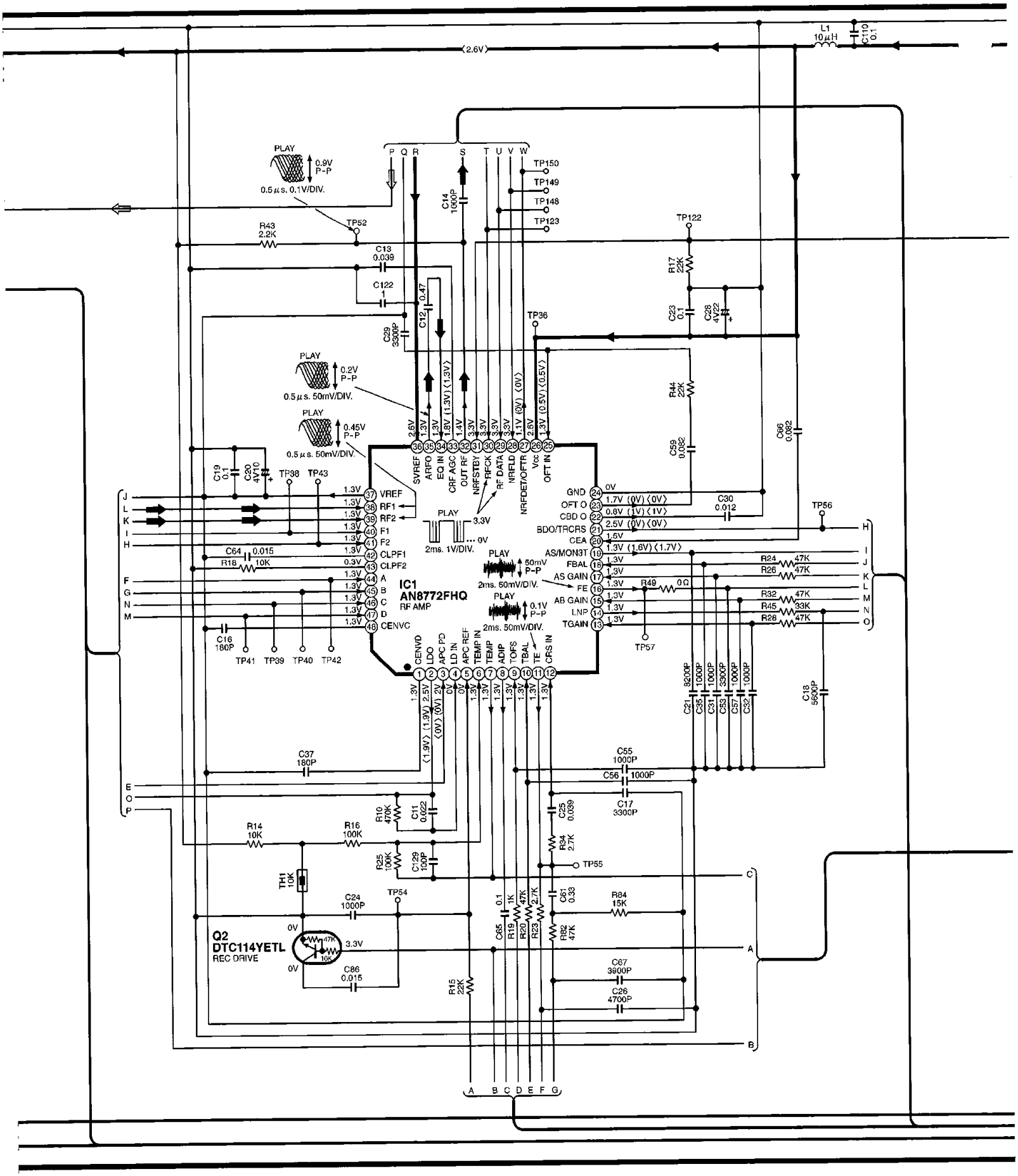

Downloaded from www.Manualslib.com manuals search engine

SCHEMATIC DIAGRAM-3

A MD SERVO CIRCUIT

:POSITIVE VOLTAGE LINE

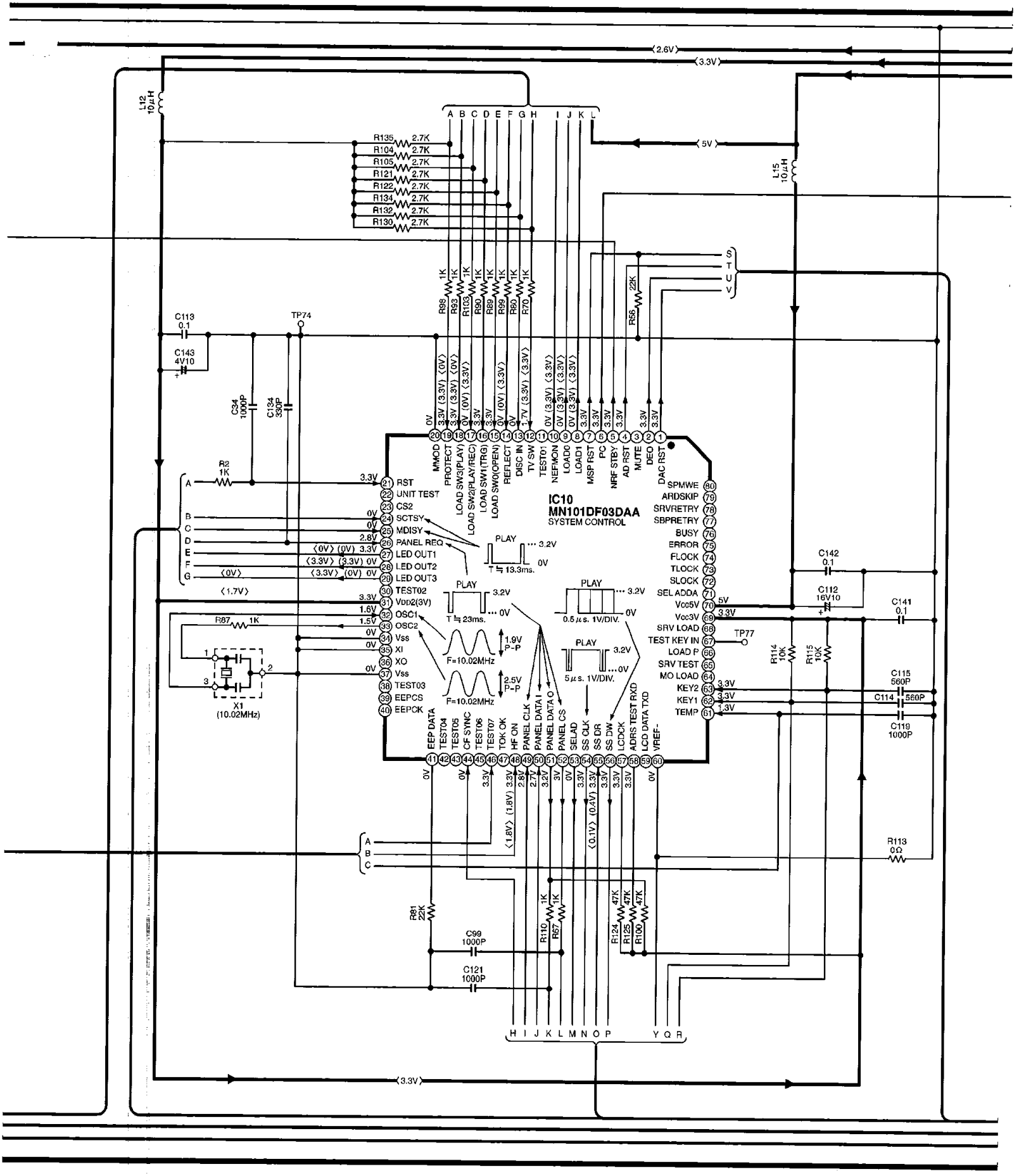

Downloaded from www.Manualslib.com manuals search engine

SCHEMATIC DIAGRAM-4

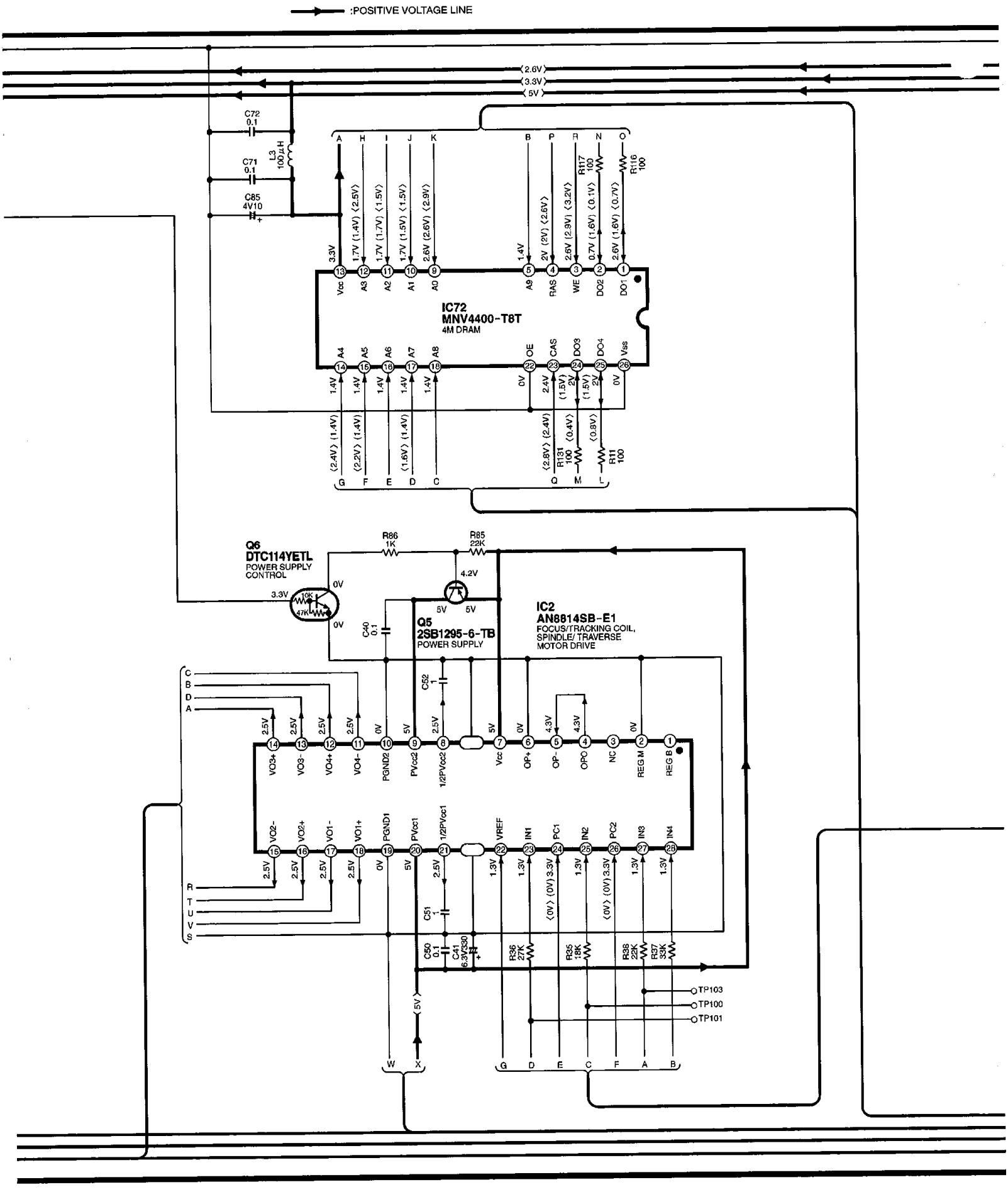

Downloaded from www.Manualslib.com manuals search engine

SCHEMATIC DIAGRAM-5

A MD SERVO CIRCUIT

:POSITIVE VOLTAGE LINE :MD PLAY SIGNAL LINE :MD REC SIGNAL LINE

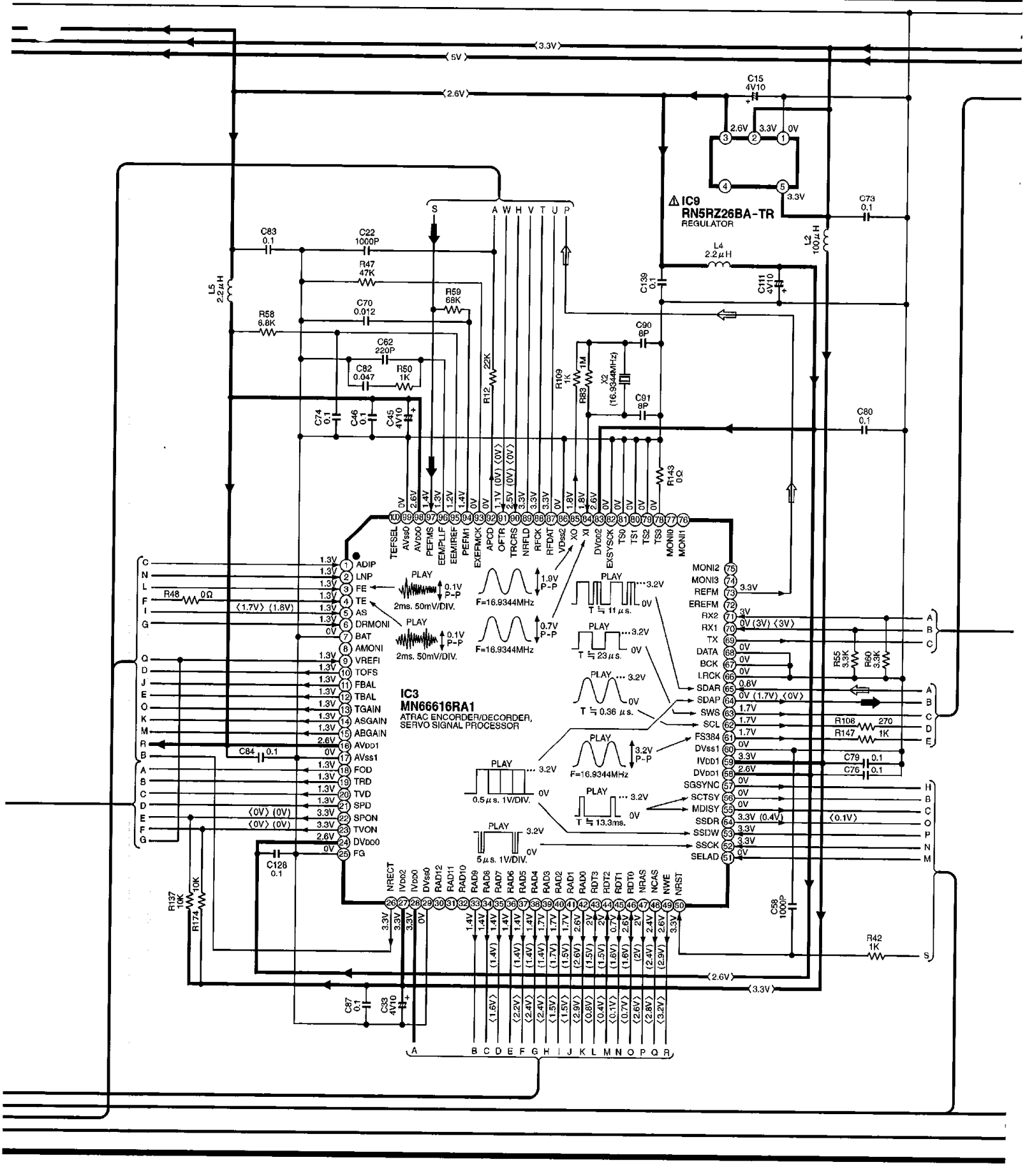

Downloaded from www.Manualslib.com manuals search engine

SCHEMATIC DIAGRAM-6

:POSITIVE VOLTAGE LINE :MD PLAY SIGNAL LINE :MD REC SIGNAL LINE

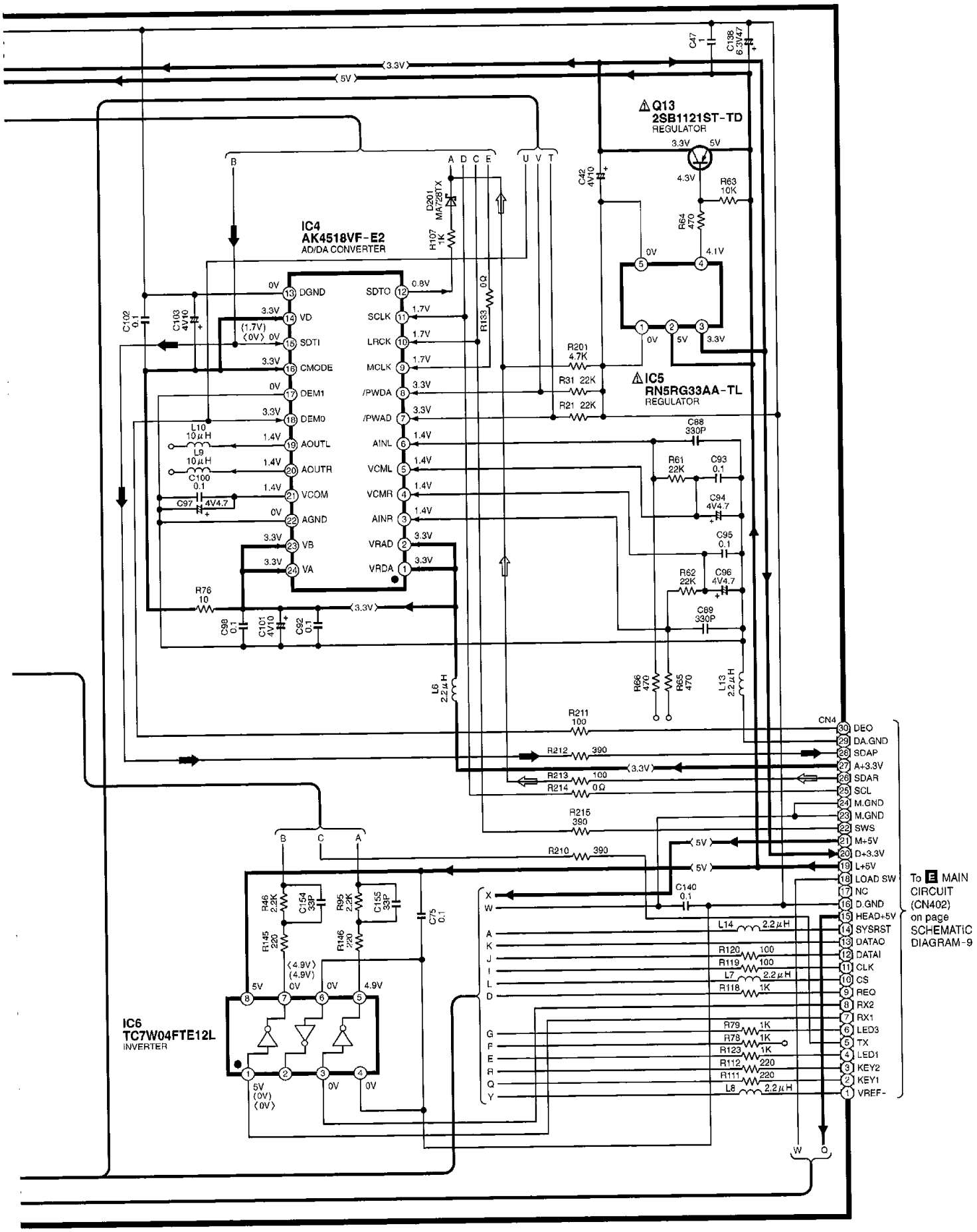

Downloaded from www.Manualslib.com manuals search engine

SCHEMATIC DIAGRAM-7

C FL CIRCUIT

:POSITIVE VOLTAGE LINE :NEGATIVE VOLTAGE LINE

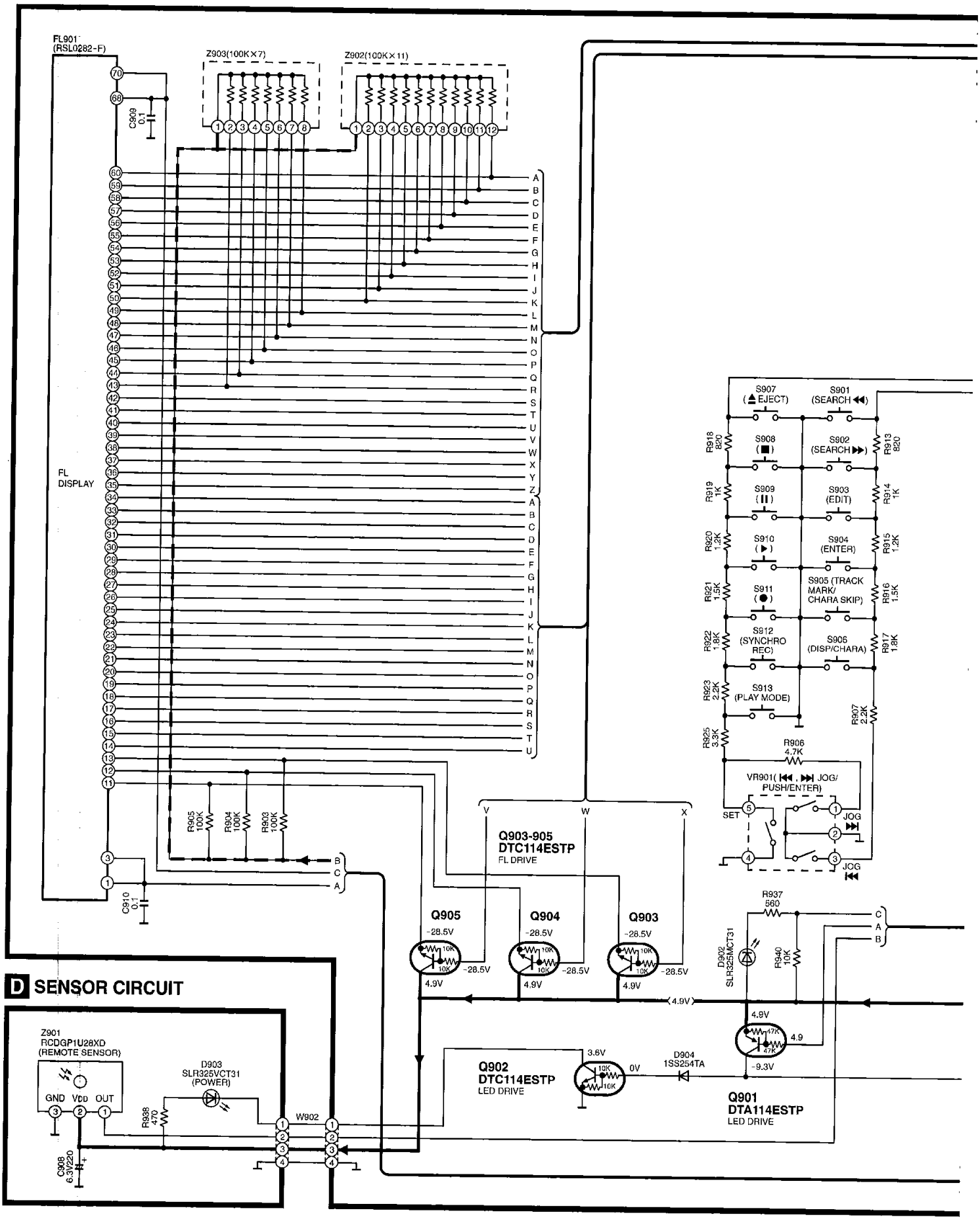

D SENSOR CIRCUIT

Downloaded from www.Manualslib.com manuals search engine

SCHEMATIC DIAGRAM–8

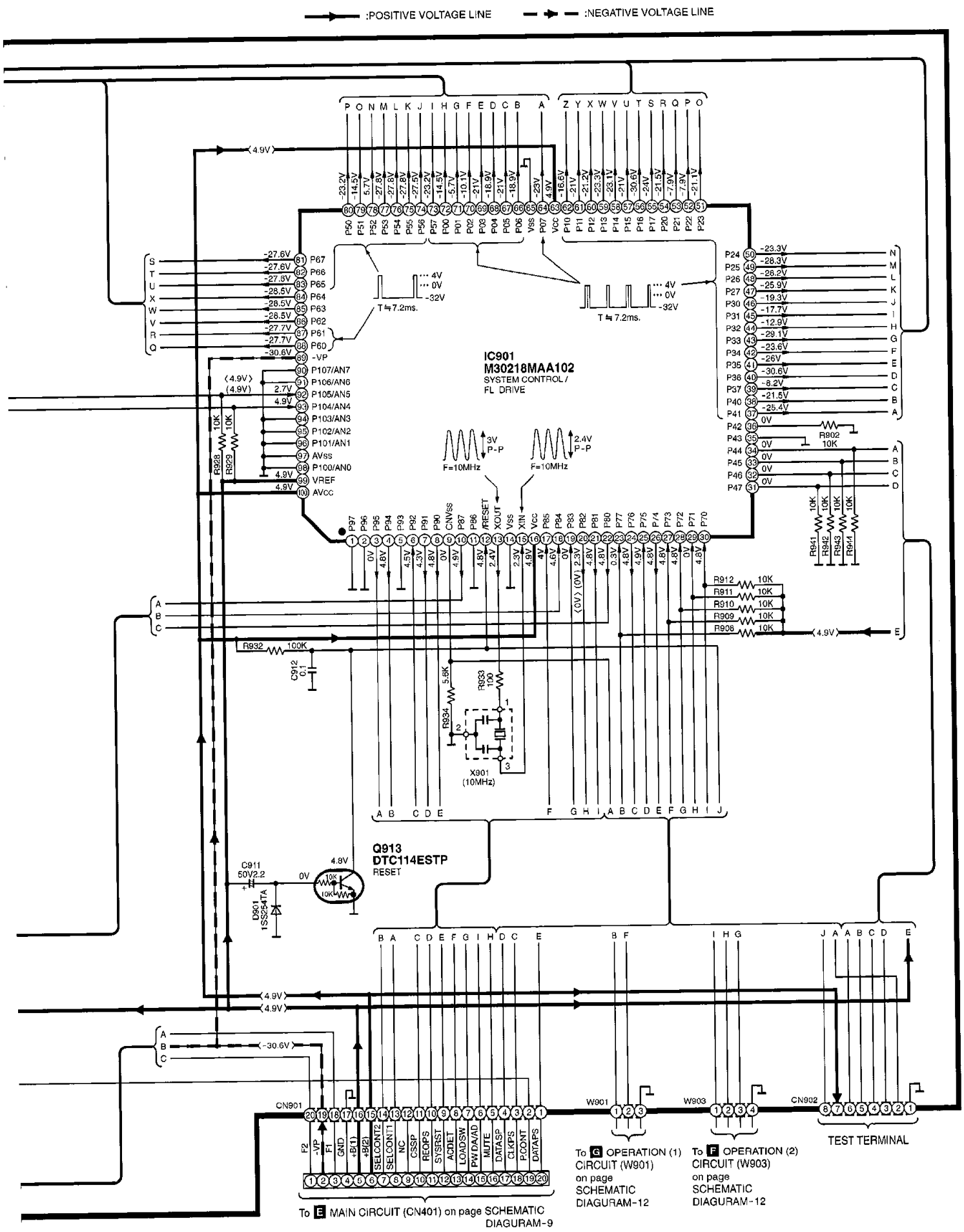

Downloaded from www.Manualslib.com manuals search engine

SCHEMATIC DIAGRAM-9

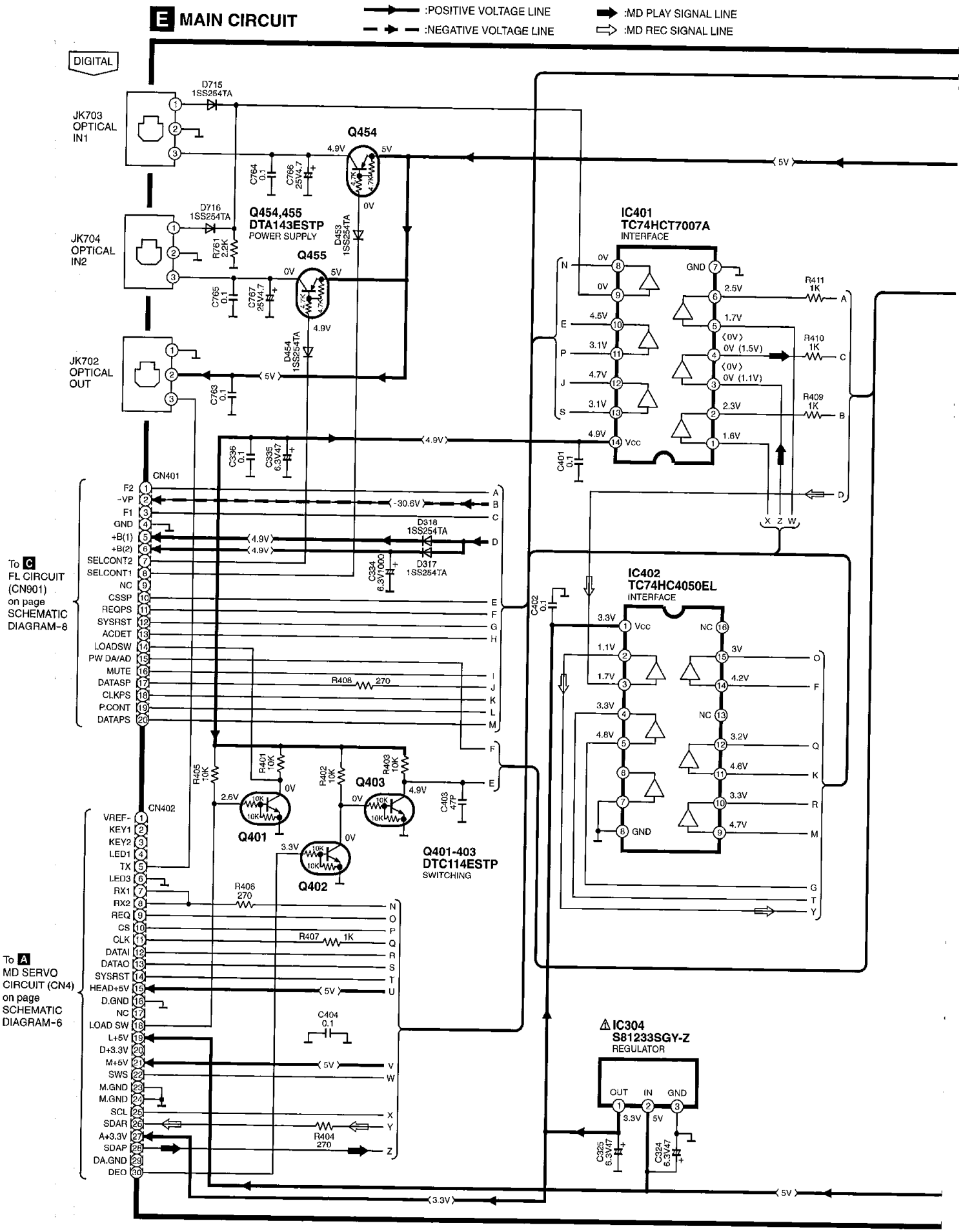

Downloaded from www.Manualslib.com manuals search engine

SCHEMATIC DIAGRAM-10

:POSITIVE VOLTAGE LINE :MD PLAY SIGNAL LINE :MD REC SIGNAL LINE

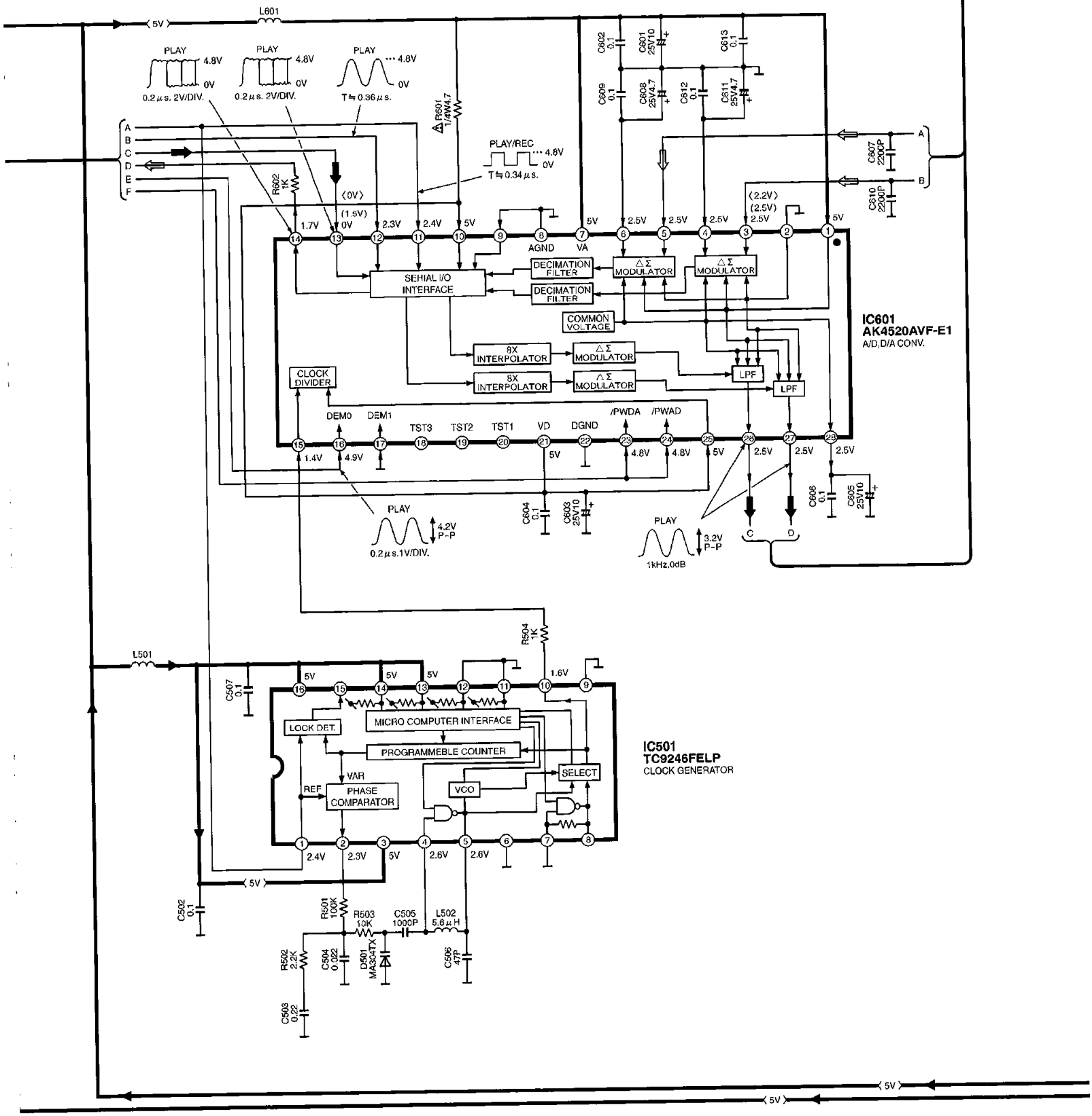

Downloaded from www.Manualslib.com manuals search engine

SCHEMATIC DIAGRAM–11

E MAIN CIRCUIT

:POSITIVE VOLTAGE LINE :NEGATIVE VOLTAGE LINE :MD PLAY SIGNAL LINE

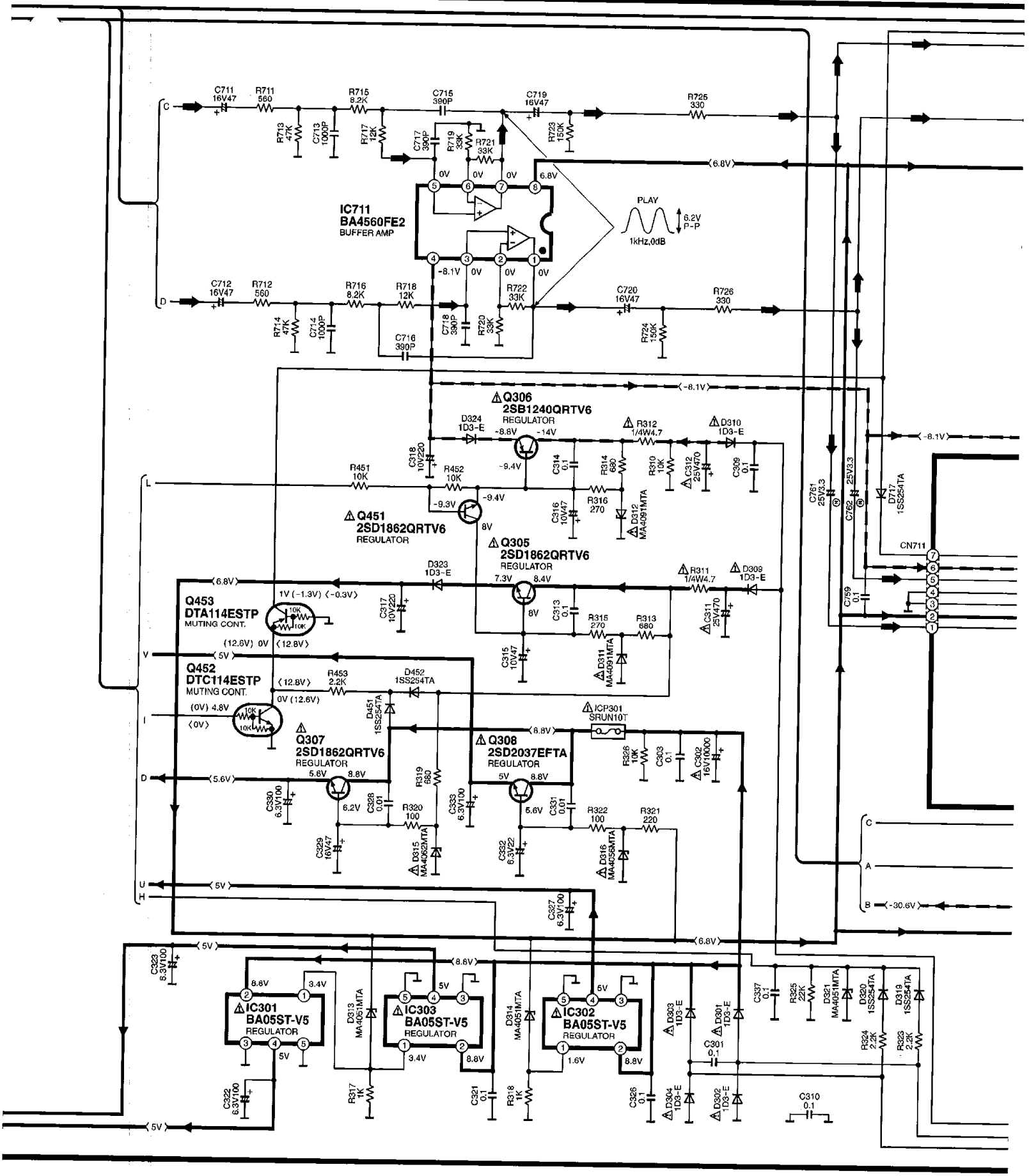

Downloaded from www.Manualslib.com manuals search engine

SCHEMATIC DIAGRAM–12

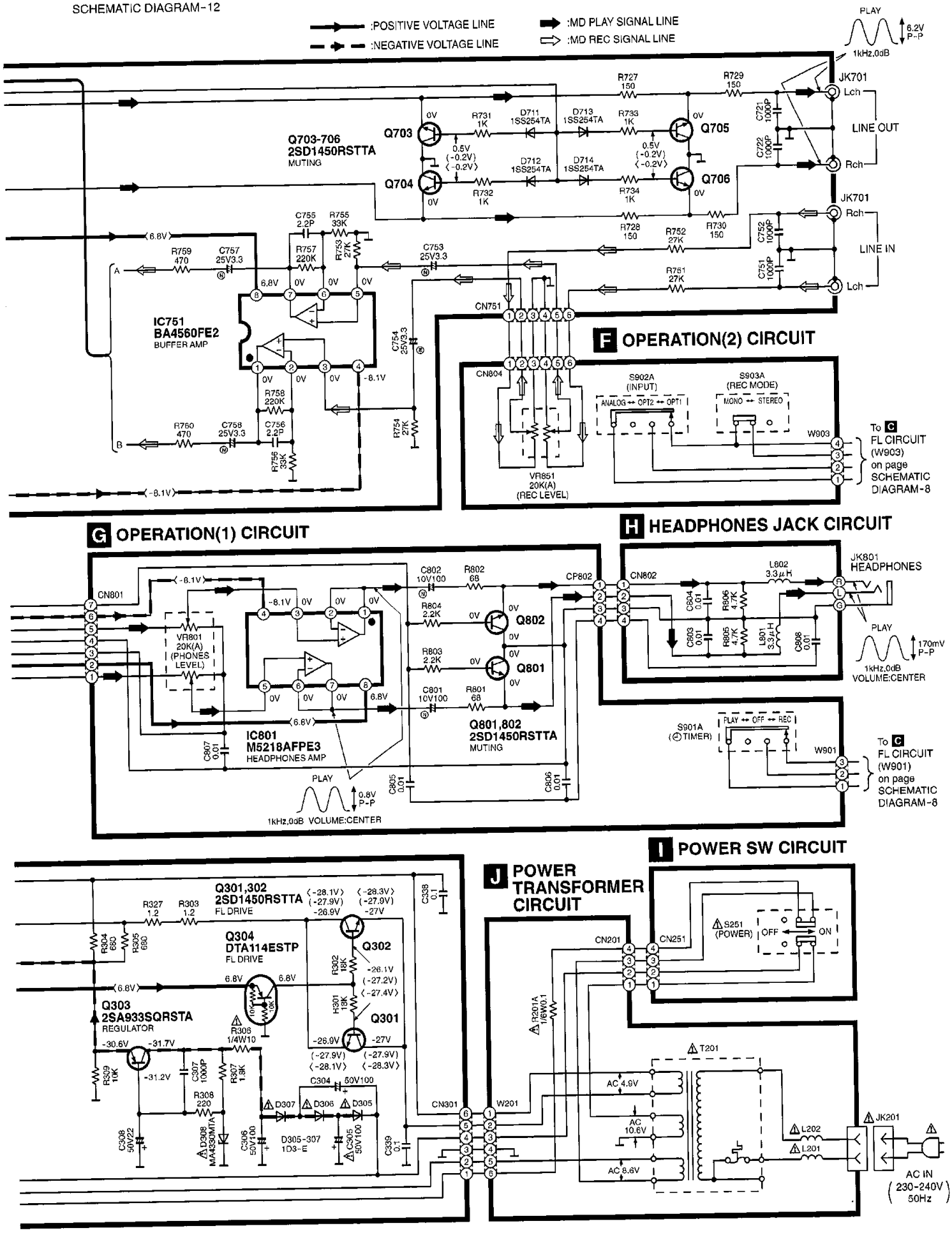

Downloaded from www.Manualslib.com manuals search engine

■ Printed Circuit Board Diagram

• This circuit board diagram may be modified at any time with the development of new technology.

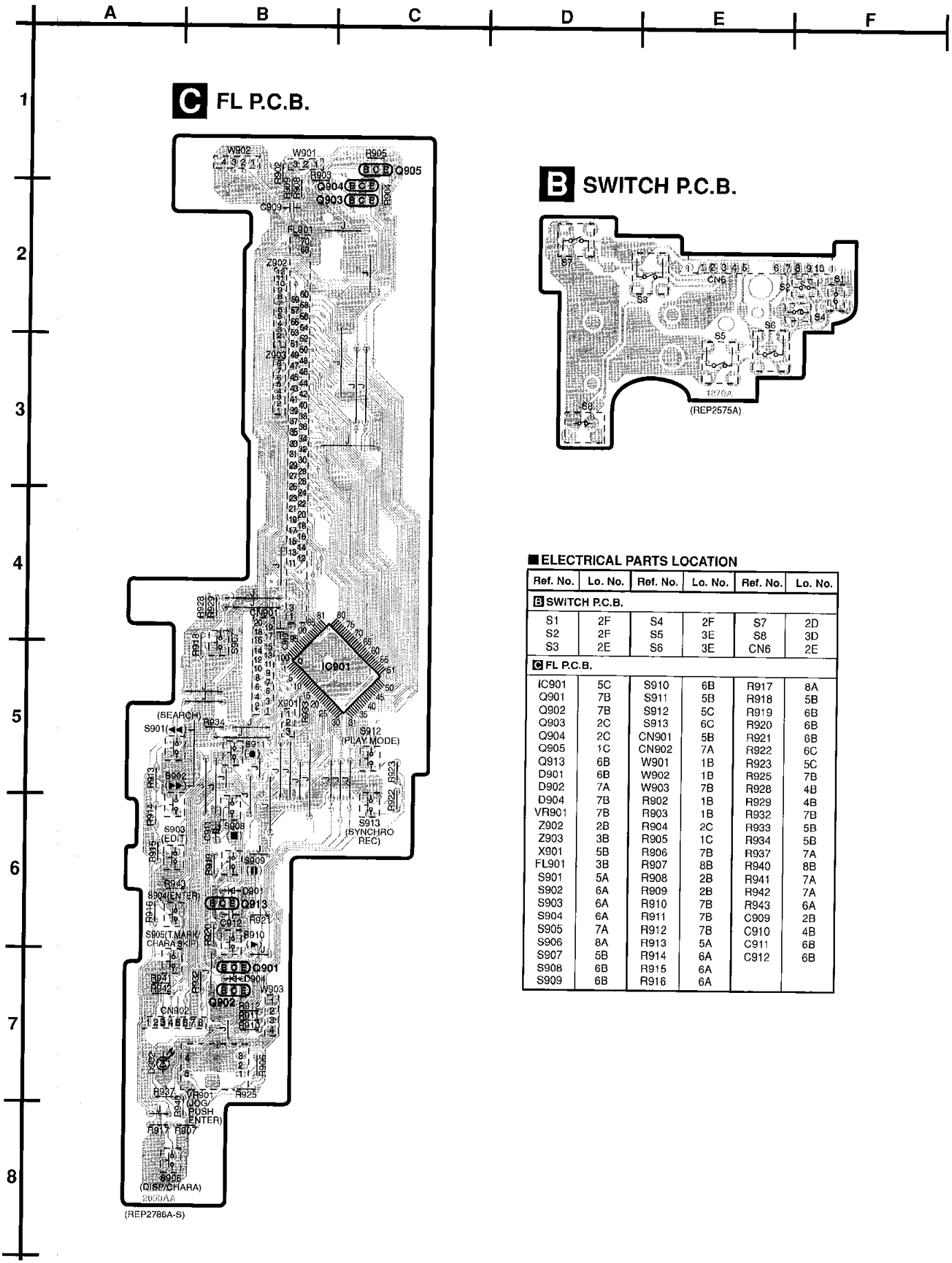

■ ELECTRICAL PARTS LOCATION

Ref. No.	Lo. No.	Ref. No.	Lo. No.	Ref. No.	Lo. No.
B SWITCH P.C.B.					
S1	2F	S4	2F	S7	2D
S2	2F	S5	3E	S8	3D
S3	2E	S6	3E	CN6	2E
C FL P.C.B.					
IC901	5C	S910	6B	R917	8A
Q901	7B	S911	5B	R918	5B
Q902	7B	S912	5C	R919	6B
Q903	2C	S913	6C	R920	6B
Q904	2C	CN901	5B	R921	6B
Q905	1C	CN902	7A	R922	6C
Q913	6B	W901	1B	R923	5C
D901	6B	W902	1B	R925	7B
D902	7A	W903	7B	R928	4B
D904	7B	R902	1B	R929	4B
VR901	7B	R903	1B	R932	7B
Z902	2B	R904	2C	R933	5B
Z903	3B	R905	1C	R934	5B
X901	5B	R906	7B	R937	7A
FL901	3B	R907	8B	R940	8B
S901	5A	R908	2B	R941	7A
S902	6A	R909	2B	R942	7A
S903	6A	R910	7B	R943	6A
S904	6A	R911	7B	C909	2B
S905	7A	R912	7B	C910	4B
S906	8A	R913	5A	C911	6B
S907	5B	R914	6A	C912	6B
S908	6B	R915	6A		
S909	6B	R916	6A		

Downloaded from www.Manualslib.com manuals search engine

A MD SERVO P.C.B. (SIDE: A)

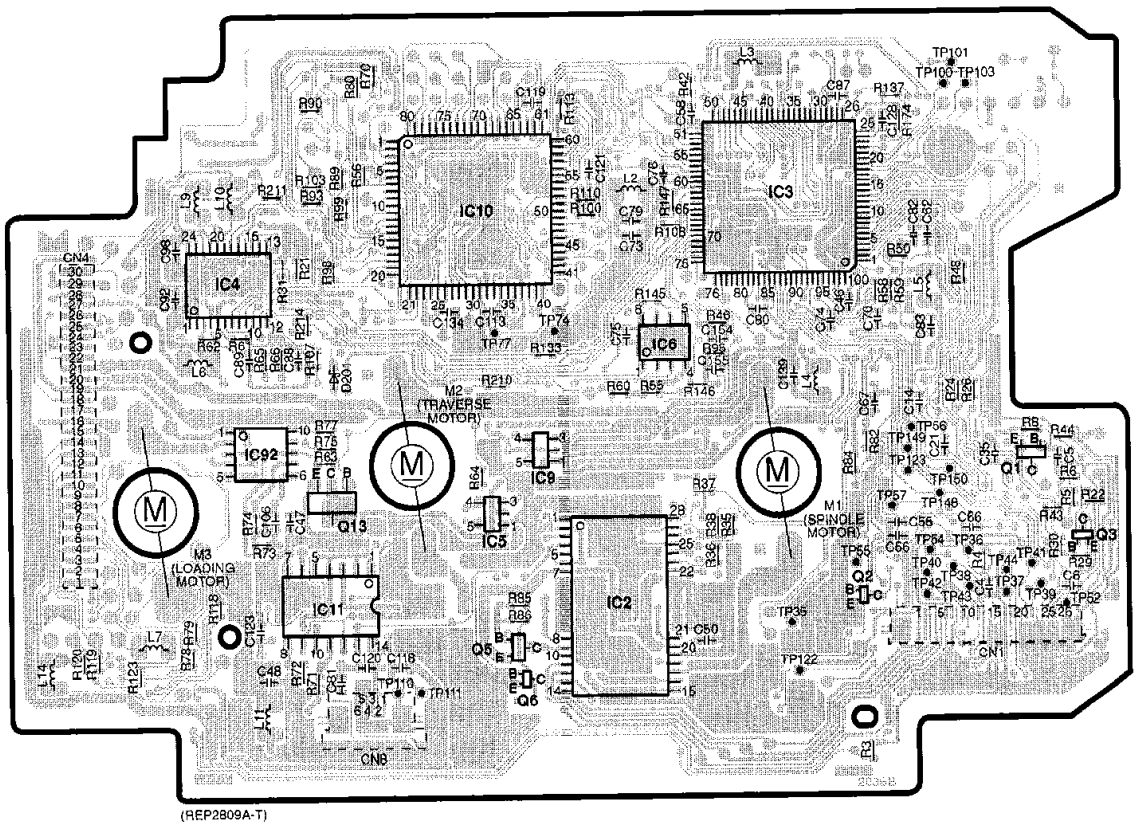

■ELECTRICAL PARTS LOCATION

Ref. No.	Lo. No.	Ref. No.	Lo. No.	Ref. No.	Lo. No.	Ref. No.	Lo. No.	Ref. No.	Lo. No.	Ref. No.	Lo. No.
IC2	4D	M1	3D	TP150	3E	R62	3B	R110	2D	C66	4E
IC3	2D	M2	3C	R3	5E	R63	3B	R113	2C	C67	3E
IC4	2B	M3	3B	R4	4E	R64	3C	R118	4B	C70	3E
IC5	4C	TP35	4E	R5	3F	R65	3B	R119	4A	C73	2D
IC6	3D	TP36	4E	R6	3F	R66	3B	R120	4A	C74	3E
IC9	3C	TP37	4E	R8	3F	R70	2C	R123	4B	C75	3D
IC10	2C	TP38	4E	R21	2B	R71	4B	R133	3C	C76	2D
IC11	4B	TP39	4F	R22	3F	R72	4B	R137	2E	C79	2D
IC92	3B	TP40	4E	R24	3E	R73	4B	R145	3D	C80	3D
Q1	3F	TP41	4F	R26	3E	R74	4B	R146	3D	C81	4B
Q2	4E	TP42	4E	R29	4F	R75	3B	R147	2D	C82	2E
Q3	4F	TP43	4E	R30	4F	R77	3B	R174	2E	C83	3E
Q5	4C	TP44	4E	R31	2B	R78	4B	R210	3C	C87	2E
Q6	4C	TP52	4F	R35	4D	R79	4B	R211	2B	C88	3B
Q13	3B	TP54	4E	R36	4D	R80	2C	R214	3B	C89	3B
D201	3B	TP55	4E	R37	3D	R82	3E	C4	4E	C92	3B
L2	2D	TP56	3E	R38	4D	R84	3E	C5	3F	C98	2B
L3	2D	TP57	4E	R42	2D	R85	4C	C6	4F	C106	4B
L4	3E	TP74	3C	R43	4F	R86	4C	C14	3E	C113	3C
L5	3E	TP77	3C	R44	3F	R89	2C	C21	3E	C118	4C
L6	3B	TP100	2E	R46	3D	R90	2B	C35	3E	C119	2C
L7	4B	TP101	2E	R48	2E	R93	2B	C46	3E	C120	4C
L9	2B	TP103	2E	R50	2E	R95	3D	C47	4B	C121	2D
L10	2B	TP110	4C	R55	3D	R98	2B	C48	4B	C123	4B
L11	4B	TP111	4C	R56	2C	R99	2C	C50	4D	C128	2E
L14	4A	TP122	4E	R58	3E	R100	2D	C55	4E	C134	3C
CN1	4E	TP123	3E	R59	3E	R103	2B	C56	4E	C139	3E
CN4	3A	TP148	3E	R60	3D	R107	3B	C58	2D	C154	3D
CN8	4C	TP149	3E	R61	3B	R108	2D	C62	2E	C155	3D

Downloaded from www.Manualslib.com manuals search engine

G H I J K L

A MD SERVO P.C.B. (SIDE:B)

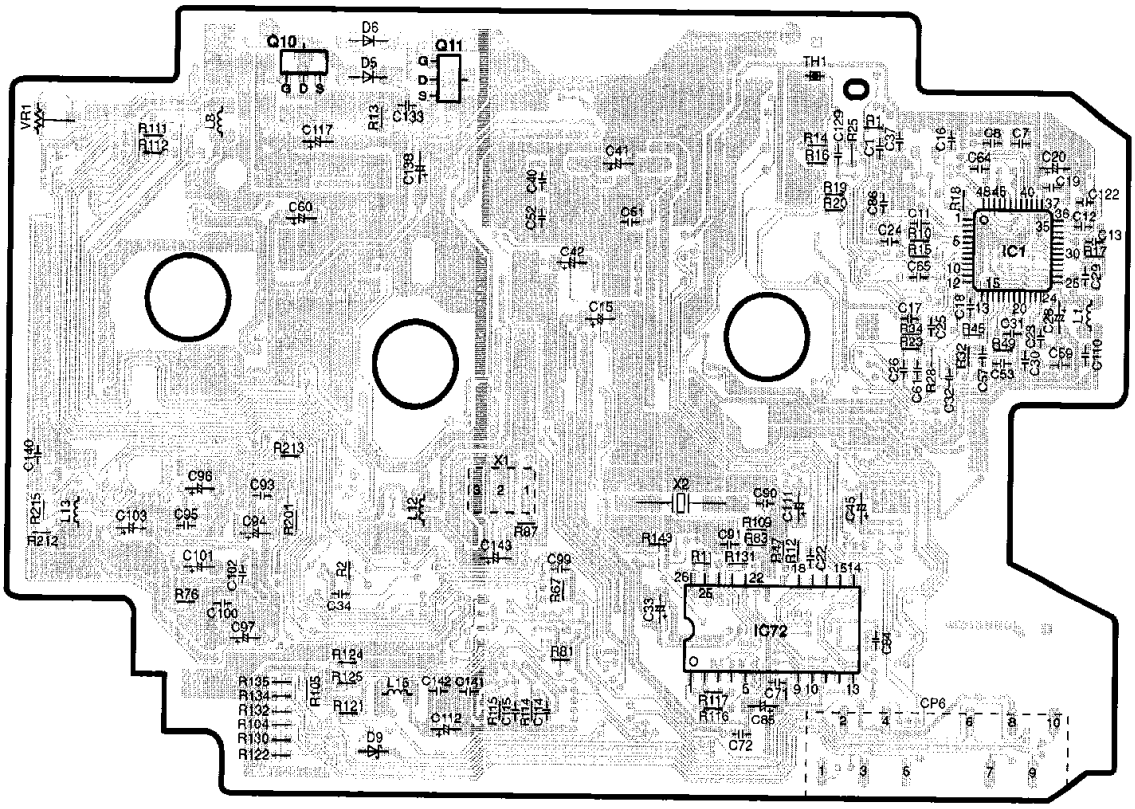

■ELECTRICAL PARTS LOCATION

Ref. No.	Lo. No.	Ref. No.	Lo. No.	Ref. No.	Lo. No.	Ref. No.	Lo. No.	Ref. No.	Lo. No.	Ref. No.	Lo. No.
IC1	2L	R14	2K	R111	2H	C11	2K	C41	2J	C97	4H
IC72	4J	R15	2K	R112	2H	C12	2L	C42	2J	C99	4J
Q10	2H	R16	2K	R114	4I	C13	2L	C45	3K	C100	4H
Q11	2I	R17	2L	R115	4I	C15	3J	C51	2J	C101	4H
D5	2I	R18	2K	R116	4J	C16	2K	C52	2I	C102	4H
D6	1I	R19	2K	R117	4J	C17	3K	C53	3L	C103	4H
D9	5I	R20	2K	R121	4I	C18	3K	C57	3K	C110	3L
VR1	2G	R23	3K	R122	5H	C19	2L	C59	3L	C111	3K
TH1	2K	R25	2K	R124	4I	C20	2L	C60	2H	C112	4I
L1	3L	R28	3K	R125	4I	C22	4K	C61	3K	C114	4I
L8	2H	R32	3K	R130	5H	C23	3L	C64	2K	C115	4I
L12	3I	R34	3K	R131	4J	C24	2K	C65	2K	C117	2H
L13	4G	R45	3K	R132	4H	C25	3K	C71	4K	C122	2L
L15	4I	R47	4K	R134	4H	C26	3K	C72	4J	C129	2K
X1	3I	R49	3L	R135	4H	C28	3L	C84	4K	C133	2I
X2	3J	R67	4J	R143	4J	C29	2L	C85	4J	C138	2I
CP6	5K	R76	4H	R201	4H	C30	3L	C86	2K	C140	3G
R1	2K	R81	4J	R212	4G	C31	3L	C90	3J	C141	4I
R2	4I	R83	4J	R213	3H	C32	3K	C91	4J	C142	4I
R10	2K	R87	4I	R215	4G	C33	4J	C93	3H	C143	4I
R11	4J	R104	4H	C1	2K	C34	4I	C94	4H		
R12	4K	R105	4H	C7	2L	C37	2K	C95	4H		
R13	2I	R109	4J	C8	2K	C40	2I	C96	3H		

Downloaded from www.Manualslib.com manuals search engine

■ Type Illustration of IC's Transistors and Diodes

AK4518VF-E2 24PIN AK4520AVF-E1 28PIN LB1830MS-TLM 10PIN M5218AFPE3 8PIN 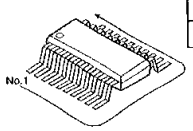	RN5RG33AA-TL RN5RZ26BA-TR 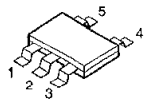	AN8772FHQ 48PIN MN101DF03DAA 80PIN MN66616RA1 100PIN 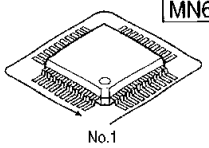	BA4560FE2 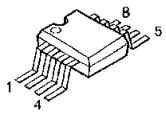
TC74HCT00AFL 14PIN TC74HCT7007A 14PIN TC74HC4050EL 16PIN TC9246FELP 16PIN 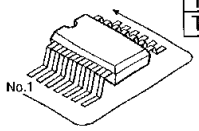	TC7W04FTE12L 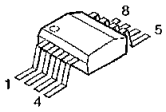	AN8814SB-E1 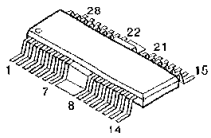	S81233SGY-Z 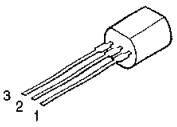	MNV4400-T8T 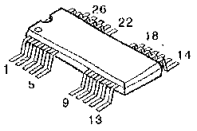
M30218MAA102 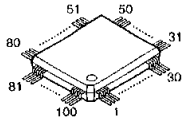	BA05ST-V5 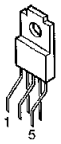	2SJ278MYTR 2SK1764KYTR 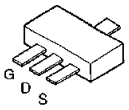	2SB1121ST-TD 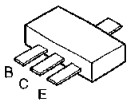	2SB1295-6-TB 2SB1462STX DTC114YETL 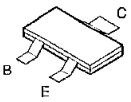	2SD1450RSTTA 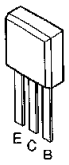
2SD2037EFTA 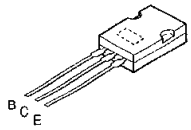	2SA933SQRSTA DTA114ESTP DTA143ESTP DTC114ESTP 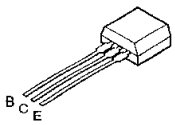	2SB1240QRTV6 2SD1862QRTV6 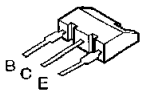	MA728TX 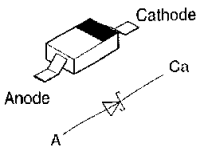	SC80209TE12R 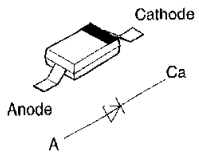
MA4051MTA MA4056MTA MA4062MTA MA4091MTA 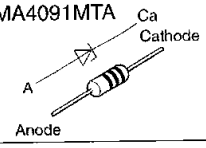	MA304TX 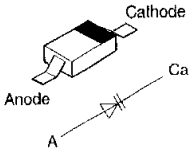	1D3-E 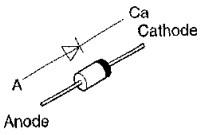	1SS254TA 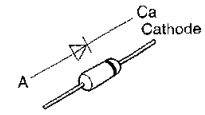	SLR325MCT31 SLR325VCT31 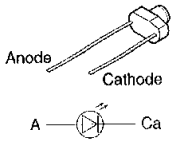	MA4330MTA 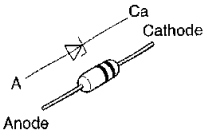

Downloaded from www.Manualslib.com manuals search engine

■ Wiring Connection Diagram

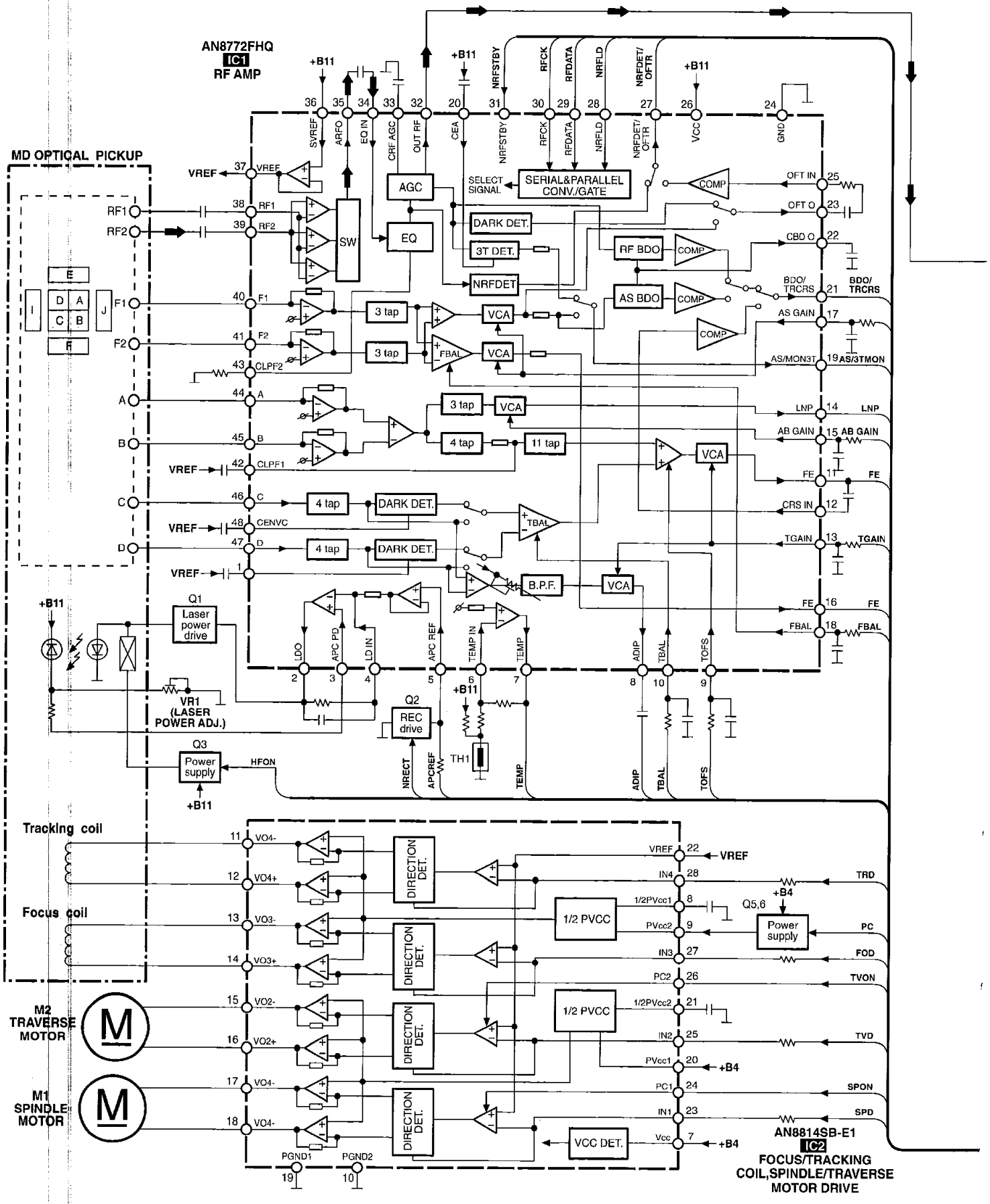

Downloaded from www.Manualslib.com manuals search engine

• IC3 (M66616RA1): ATRAC Encorder/Decorder, Servo Signal Processor

Pin No.	Terminal Name	I/O	Function
1	ADIP	I	ADIP FM signal input terminal
2	LNP	I	Lens position signal input
3	FE	I	Focus error signal input terminal
4	TE	I	Tracking error signal input terminal
5	AS	I	AS signal input
6	DRMONI	I	Drive voltage monitor input
7	BAT	I	Battery power supply terminal
8	AMONI	–	Servo analog monitor signal output (Not used, open)
9	VREFI	I	Reference voltage input terminal
10	TOFS	O	Tracking off-set adjustment output
11	FBAL	O	Focus balance adjustment output
12	TBAL	O	Tracking balance adjustment output
13	TGAIN	O	TE error gain adjustment output
14	ASGAIN	O	Main beam amp gain adjustment output
15	ABGAIN	O	APP adjustment output
16	$AV_{DD}1$	I	Power supply terminal
17	AVss1	–	GND terminal
18	FOD	O	Focus drive signal output terminal
19	TRD	O	Tracking drive signal output terminal
20	TVD	O	Traverse motor drive signal output terminal
21	SPD	O	Spindle motor drive signal output terminal
22	SPON	O	Drive IC spindle ON signal output terminal
23	TVON	O	Drive IC traverse ON signal output terminal
24	$DV_{DD}0$	I	Power supply terminal
25	FG	I	FG input terminal
26	NRECT	O	Rec/Play switching signal output
27	IVDD2	–	Power supply for I/O pad
28	IVDD0	–	Power supply for I/O pad

Pin No.	Terminal Name	I/O	Function
29	DVss0	–	GND terminal
30~32	RAD12~10	–	DRAM address output terminal (Not used, open)
33~42	RAD9~0	O	DRAM address output terminal
43~46	RDT3~0	I/O	DRAM data input/output terminal
47	NRAS	O	DRAM row address strobe output terminal
48	NCAS	O	DRAM culum address strobe output terminal
49	NWE	O	DRAM write enable output terminal
50	NRST	I	Reset signal input
51	SELAD	I	MSP/MDA,I/F address select input terminal ("H" : Address)
52	SSCK	I	MSP/MDA,I/F clock input terminal
53	SSDW	I	MSP/MDA,I/F write data input terminal
54	SSDR	O	MSP/MDA,I/F read data output terminal
55	MDISY	O	Leader synchronous signal output
56	SCTSY	O	ADIP synchronous noise output terminal
57	SGSYNC	O	Frame synchronous signal output terminal
58	$DV_{DD}1$	I	Power supply terminal
59	IVDD1	–	Power supply for I/O pad
60	DVss1	–	GND terminal
61	FS384	O	384 Fs output terminal
62	SCL	O	Bit clock output terminal
63	SWS	O	Word clock output terminal
64	SDAP	O	Audio data output terminal
65	SDAR	I	Audio data input terminal
66	LRCK	I	CD word clock input terminal
67	BCK	I	CD bit clock input terminal
68	DATA	I	CD data input terminal
69	TX	O	Digital audio interface signal output terminal
70	RX1	I	Digital audio interface signal 1 input terminal

Downloaded from www.Manualslib.com manuals search engine

Pin No.	Terminal Name	I/O	Function
71	RX2	I	Digital audio interface signal 2 input terminal
72	NREFM	–	EFM modulation inverted output (Not used, open)
73	REFM	O	EFM modulation output terminal
74	MONI3	–	Monitor signal output (Not used, open)
75	MONI2	–	Monitor signal output (Not used, open)
76	MONI1	–	Monitor signal output (Not used, open)
77	MONI0	–	Monitor signal output (Not used, open)
78	TS3	–	Reserved (Not used, connected to GND)
79	TS2	–	Reserved (Not used, connected to GND)
80	TS1	–	Reserved (Not used, connected to GND)
81	TS0	–	Reserved (Not used, connected to GND)
82	EXSYSCK	–	External system clock input (Not used, connected to GND)
83	$DV_{DD}2$	I	Power supply terminal
84	XI	I	Crystal oscillator (16.9344MHz)
85	X0	O	

Pin No.	Terminal Name	I/O	Function
86	VDss2	–	GND terminal
87	RFDAT	O	RF serial data output
88	RFCK	O	RF serial clock output
89	NRFLD	O	RF serial load output
90	TRCRS	I	Track cross input terminal
91	OFTR	I	Off-track signal input terminal
92	APCD	O	Laser power PWM output
93	EXEFMCK	I	External FM clock input (Not used, connected to GND via resistor)
94	PEFM1	O	EFM loop filter output
95	EFMIREF	I	EFM PLL reference current input
96	EFMPLLF	O	EFM PLL filter output
97	PEEMS	I	EFM signal input
98	$AV_{DD}0$	I	Power supply terminal
99	AVss0	–	GND terminal
100	TEFSEL	–	Not used, open

Downloaded from www.Manualslib.com manuals search engine

• Adjustment procedure

Note: There are two methods of adjusting the player, either by using a laser power meter or by using a cartridge type laser power meter.

1. With no MD loaded in the player, press "1" on the player's remote control.
   "RAM LASER" will be displayed to indicate the read power adjustment mode.
2. If using a laser power meter, slide open the sensor cover (see Fig. 1).
3. If using a laser power meter, position the sensor directly above the optical pickup (see Fig. 2).
   If using a cartridge type laser power meter, load the cartridge into the MD mechanism (see Fig. 3).
4. Confirm that the reading of the laser power meter or cartridge type laser power meter is within the specified range. If it is not within the specified range, adjust by turning **VR1** (see Fig. 4).

Specified range (read power): 600 µW or lower

Caution:
- Proceeding on to the subsequent adjustment procedure with the read power exceeding 600 µW will result in damage to the optical pickup.

5. Press "2" on the player's remote control.
   "WRITE LASER" will be displayed to indicate the write power adjustment mode.
6. Confirm that the reading of the laser power meter or cartridge type laser power meter is within the specified range. If it is not within the specified range, adjust by turning **VR1** (see Fig. 4).

Specified range (write power): 4.8±0.1 mW

Caution:
- Do not allow the write power to even momentarily reach or exceed 5.5 mW. Doing so will result in damage to the optical pickup.

7. Press "3" on the player's remote control.
   "ROM LASER" will be displayed to indicate the ROM data confirmation mode.
8. Confirm that the reading of the laser power meter or cartridge type laser power meter is within the specified range.

Specified range (ROM data laser power): 540 ~ 660 µW

9. Press "1" on the player's remote control.
   "RAM LASER" will be displayed to indicate the RAM data confirmation mode.
10. Confirm that the reading of the laser power meter or cartridge type laser power meter is within the specified range.

Specified range (RAM data laser power): 540 ~ 660 µW

*** If the reading in either step 8 or 10 above is not within the specified range, first switch off the power, and then reset the unit to the adjustment mode and repeat the adjustment procedure.**

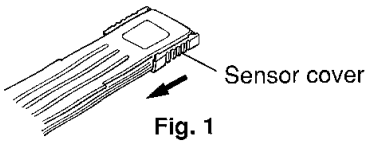

Fig. 1

Caution:
Do not allow the laser power meter to come in contact with either the optical pickup or the magnetic head.

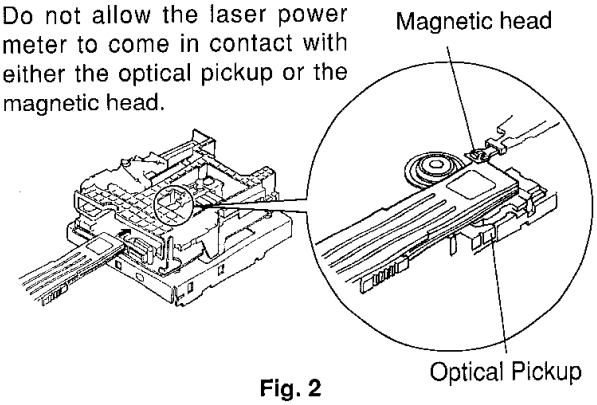

Fig. 2

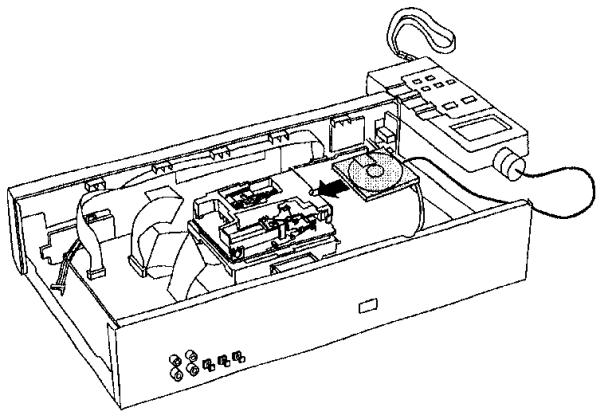

Fig. 3

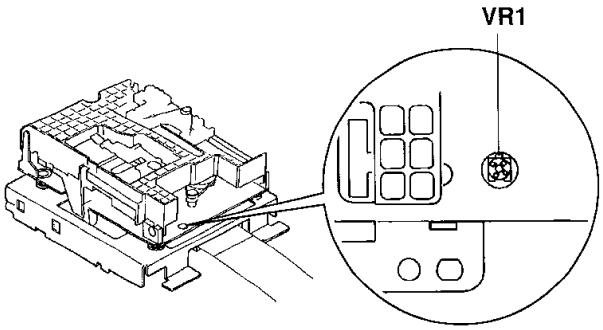

Fig. 4

Downloaded from www.Manualslib.com manuals search engine

■ Replacement Parts List

Notes: * Important safety notice:
Components identified by ⚠ mark have special characteristics important for safety. Furthermore, special parts which have purposes of fire-(resistors), etc. are used. When replacing any of components, be sure to use only manufacture's specified parts shown in the parts list.
* The parenthesized indications in the Remarks columns specify the areas. (Refer to the cover page for area.)
* ALL parts are supplied by MESA.
* [MAVD] indicates in Remarks columns parts that are supplied by MAVD.
* The "<IA> <IB> <IC> <ID> <IE>" marks in Remarks indicate language of instruction manual.
<IA>: English,Spanish,Swedish
<IB>: Germany,Italian,French
<IC>: English
<ID>: Russian,Polish,Czech
<IE>: Dutch,Danish

Ref.No.	Part No.	Part Name & Description	Pcs	Remarks
1	RHD30035-K	SCREW	4	
2	RKM0152-K	TOP CABINET	1	[MAVD]
3	XTBS3+8JFZ1	SCREW	1	
4	REX0945	WIRE ASS'Y	1	[MAVD]
5	REZ1159	FLAT CABLE (30P)	1	[MAVD]
6	REZ1160	FLAT CABLE (20P)	1	[MAVD]
7	RHD30053	SCREW	3	
8	RKA0040B-K1	FOOT	4	
9	RYF0501-Q	DOOR UNIT	1	[MAVD]
9-1	RGK1111-K	NUT	4	[MAVD]
9-2	RHD26033	SCREW	4	[MAVD]
9-3	XTS2+4GFZ	SCREW	4	
10	RDG0449	GEAR	2	[MAVD]
11	RYP859Z-K	FRONT PANEL ASS'Y	1	[MAVD]
12	RGK0977-1S	MD LID	1	[MAVD]
13	RGK1112-S	ORNAMENT	1	[MAVD]
14	RGK1113-S	MD SLOT ORNAMENT	1	[MAVD]
15	RGU0890-1K	BUTTON,POWER	1	[MAVD]
16	RGU1709-K	BUTTON,MAIN	1	[MAVD]
17	RGU1712-K	BUTTON,OPEN	1	[MAVD]
18	RGU1714-S	BUTTON,PLAY MODE	1	[MAVD]
19	RGV0112-S	KNOB,SLIDE	3	[MAVD]
20	RGW0308-K	KNOB,JOG	1	[MAVD]
21	RGW0310-S	KNOB,VOLUME	2	[MAVD]
22	RHD20010	SCREW	1	
23	RHD26021	SCREW	14	
24	RHD26034	SCREW	3	[MAVD]
25	RHN70002	NUT	1	
26	RMB0514	SPRING	1	
27	RKG0009	MAGNET	1	
28	RME0284	SPRING	1	[MAVD]
29	XTBR3+20JFZ	SCREW	2	
30	XTBS3+8JFZ1	SCREW	15	
31	XTB3+10JFZ	SCREW	4	
101	RHD17021	SCREW	1	
102	RHD17022	SCREW	1	
103	RMC0348	SPRING	1	
104	RMC0349	SPRING	1	
105	RML0515	HEAD GUIDE	1	
106	RMQ0750	BASE	1	
107	RMQ0751	NUT PLATE	1	
108	RMS0611	SHAFT	1	
109	RXJ0021	GUIDE SHAFT	1	
110	RXK0249	CHASSIS	1	
110-1	RDV0055	BELT	1	
110-2	REM0077	MOTOR 1	1	
110-3	REM0078	MOTOR 2	1	
110-4	RMB0548	SPRING	1	
110-5	RMQ0752	DETECTOR PIN 1	1	
110-6	RMQ0753	DETECTOR PIN 2	2	
110-7	XQN17+C25FZ	SCREW	4	
110-8	XYC2+FF105	SCREW	1	
111	RAF1700A	OPTICAL PICK UP	1	
112	XTW2+6S	SCREW	1	
113	RHD20053	SCREW	4	
114	RMB0504	SPRING	4	
115	RMG0447-K	DAMPER RUBBER	4	
116	XTN17+6GFZ	SCREW	1	
117	RXQ0558	HOLDER	1	
118	RED0047-1	MAGNETIC HEAD	1	
A1	EUR645272	REMOTE CONTROLLER	1	[MAVD]
A1-1	UR64EC1987B	BATT. COVER	1	
⚠ A2	RJA0043-C	AC POWER CORD	1	(E,EG)[MAVD]
⚠ A2	RJA0044-C	AC POWER CORD	1	(EB)[MAVD]
A3	RJL1X007B08	OPTICAL CABLE	1	[MAVD]
A4	RJL2P004B08	PIN CORD	2	
A5	RQA0117	WARRANTY CARD	1	
A6	RQCB0169	SERVICE CENTER LIST	1	
A7	RQT4792-D	OPERATING INSTRUCTIONS	1	(EG)<IA>[MAVD]
A8	RQT4794-E	OPERATING INSTRUCTIONS	1	(E)<IB>[MAVD]
A9	RQT4796-B	OPERATING INSTRUCTIONS	1	(EB)<IC>[MAVD]
A10	RQT4793-H	OPERATING INSTRUCTIONS	1	(EG)<ID>[MAVD]
A11	RQT4795-R	OPERATING INSTRUCTIONS	1	(E)<IE>[MAVD]
C1	ECUV1H221KBV	50V 220P	1	
C4	ECUV0J105ZFV	6.3V 1U	1	
C5	ECUVNA224KBV	10V 0.22U	1	
C6	ECUV0J105ZFV	6.3V 1U	1	
C7,C8	ECUVNA224KBV	10V 0.22U	2	
C11	ECUV1C223KBV	16V 0.022U	1	
C12	ECUV0J474KBV	6.3V 0.47U	1	
C13	ECUV1C393KBV	16V 0.039U	1	
C14	ECUV1H102KBV	50V 1000P	1	
C15	ECST0GY106RR	4V 10U	1	
C16	ECUV1H181KV	50V 180P	1	
C17	ECUV1H332KBV	50V 3300P	1	
C18	ECUV1H562KBV	50V 5600P	1	
C19	ECUVNC104ZFV	16V 0.1U	1	
C20	ECST0GY106RR	4V 10U	1	
C21	ECUV1H822KBV	50V 8200P	1	
C22	ECUV1H102KBV	50V 1000P	1	
C23	ECUVNC104ZFV	16V 0.1U	1	
C24	ECUV1H102KBV	50V 1000P	1	
C25	ECUV1C393KBV	16V 0.039U	1	
C26	ECUV1H472KBV	16V 4700P	1	
C28	ECST0GY226RR	4V 22U	1	
C29	ECUV1H332KBV	50V 3300P	1	
C30	ECUV1E123KBV	25V 0.012U	1	
C31,32	ECUV1H102KBV	50V 1000P	2	
C33	ECST0GY106RR	4V 10U	1	
C34,35	ECUV1H102KBV	50V 1000P	2	
C37	ECUV1H181KV	50V 180P	1	
C40	ECUVNC104ZFV	16V 0.1U	1	
C41	ECEV0JA331P	6.3V 330U	1	
C42	ECST0GY106RR	4V 10U	1	
C45	ECST0GY106RR	4V 10U	1	
C46	ECUVNC104ZFV	16V 0.1U	1	
C47	ECUV0J105ZFV	6.3V 1U	1	
C48	ECUVNC104ZFV	16V 0.1U	1	
C50	ECUVNC104ZFV	16V 0.1U	1	
C51,52	ECUV0J105ZFV	6.3V 1U	2	
C53	ECUV1H332KBV	50V 3300P	1	
C55-58	ECUV1H102KBV	50V 1000P	4	
C59	ECUV1C823KBV	16V 0.082U	1	
C60	ECEV1CA100NR	16V 10U	1	
C61	ECUV0J334KBV	16V 0.33U	1	
C62	ECUV1H221KBV	50V 220P	1	
C64	ECUV1E153KBV	25V 0.015U	1	
C65	ECUV1C104KBV	16V 0.1U	1	
C66	ECUV1C823KBV	16V 0.082U	1	
C67	ECUV1H392KBV	50V 3900P	1	
C70	ECUV1E123KBV	25V 0.012U	1	
C71-76	ECUVNC104ZFV	16V 0.1U	6	
C79,80	ECUVNC104ZFV	16V 0.1U	2	
C81	ECUV1H560JCV	50V 56P	1	
C82	ECUV1C473KBV	16V 0.047U	1	
C83,84	ECUVNC104ZFV	16V 0.1U	2	
C85	ECST0GY106RR	4V 10U	1	
C86	ECUV1E153KBV	25V 0.015U	1	
C87	ECUVNC104ZFV	16V 0.1U	1	
C88,89	ECUV1H331KBV	50V 330P	2	
C90,91	ECUV1H080DCV	50V 8P	2	

Downloaded from www.Manualslib.com manuals search engine

Downloaded from www.Manualslib.com manuals search engine

Downloaded from www.Manualslib.com manuals search engine

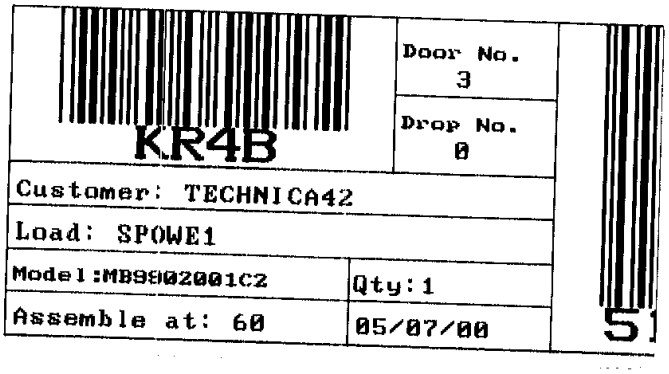

Printed in Germany
MAVD F9902 YM/KH

Downloaded from www.Manualslib.com manuals search engine