FENDER SIDEKICK KEYBOARD 60 (023-2500-000)

PARTS LIST PAGE 1 OF 3

REFERENCE	PART #	DESCRIPTION	QTY
I.C. 1-6	025118	I.C. Op. Amp.	6
Q1	022865	Transistor 2SK30GR	1
Q2,3,6	025124	Transistor 2SC2362	3
Q4,10	025123	Transistor 2SB560	2
Q5,15	023191	Transistor 2SD313E	2
Q7,8	027062	Transistor 2SD438	2
Q9,11	023194	Transistor 2SD1046E	2
Q12,14	022864	Transistor 2SC1815GR	2
Q13	025121	Transistor 2SA1015GR	1
D1-17	022868	Diode 1S1588	17
D18,20	022908	LED Red (pilot, limiter)	2
D19	026966	Diode GZA-30X 30V Zener	1
D21,22	025140	Diode GZA-15Z 15V Zener	2
D23	025131	Diode Bridge Rectifier DB-40C	1
R1,7,13,53-55,	022878	Resistor 1/4W 10K Ohm (11 total)	6
R70,71,73,74,83	022878	Resistor 1/4W 10K Ohm (11 total)	5
R2,8,14,20,25	025649	Resistor 1/4W 220K Ohm	5
R3,9,15,38,89	024100	Resistor 1/4W 470 Ohm	5
R4,10,16,27	022981	Resistor 1/4W 22K Ohm	4
R5,11,17	022976	Resistor 1/4W 1.5K Ohm	3
R6,12,18	025152	Resistor 1/4W 6.8K Ohm	3
R19,56	025151	Resistor 1/4W 2.7K Ohm	2
R21,59,62,63,68	022987	Resistor 1/4W 100K Ohm	5
R22-24,32,41	022985	Resistor 1/4W 68K Ohm	5
R26,46	022977	Resistor 1/4W 2.2K Ohm	2
R28,31	024103	Resistor 1/4W 15K Ohm	2
R29	025647	Resistor 1/4W 82K Ohm	1
R30	026945	Resistor 1/4W 1.5M Ohm	1
R33	016951	Resistor 1/4W 1.2K Ohm	1
R34,82	025144	Resistor 1/4W 56 Ohm	2
R35,40,47	016934	Resistor 1/4W 100 Ohm	3
R36,39,58	022975	Resistor 1/4W 1K Ohm	3
R37,84	022980	Resistor 1/4W 5.6K Ohm	2
R42,45	025145	Resistor 1/4W 100 Ohm	2
R50	025157	Resistor 1/4W 27K Ohm	1
R51,52	024104	Resistor 1/4W 33K Ohm	2
R57	022991	Resistor 1/4W 2.2M Ohm	1
R60	025651	Resistor 1/4W 5.6M Ohm	1
R61	025646	Resistor 1/4W 39K Ohm	1
R64,66,67,68	022982	Resistor 1/4W 47K Ohm	4
R65,87	022979	Resistor 1/4W 3.3K Ohm	2
R72	025158	Resistor 1/4W 150K Ohm	1
R75-78	025147	Resistor 1/4W 270 Ohm	4
R79,80	022877	Resistor 1/4W 4.7K Ohm	2
R81	022990	Resistor 1/4W 1M Ohm	1

FENDER SIDEKICK KEYBOARD 60 (023-2500-000)

PARTS LIST PAGE 2 OF 3

REFERENCE	PART #	DESCRIPTION	QTY
R48	025168	Resistor 1W 220 Ohm	1
R49	022997	Resistor 1W 10 Ohm	1
R85,86	026951	Resistor 1W 750 Ohm	2
R88	026957	Resistor 2W 100 Ohm	1
R43,44	022835	Resistor 5W 0.5 Ohm	2
VR1,2,3,7,8	025201	Control 10KL (vol/master/reverb)	5
VR4,5,6	025199	Control 50KA (treble/mid/bass)	3
C1,6,11	023014	Capacitor Mylar 0.1 ufd	3
C18	024118	Capacitor Mylar 0.001ufd	1
C19	025194	Capacitor Mylar0.0068ufd	1
C26,27,48	024112	Capacitor Mylar 0.01 ufd	3
C37	022896	Capacitor Mylar 0.047ufd	1
C41	022894	Capacitor Mylar 0.033ufd	1
C44	022893	Capacitor Mylar 0.022ufd	1
C2,4,7,9,12,14	025178	Capacitor Disc 220pfd	6
C17,28,30	023009	Capacitor Disc 100pfd	3
C20	023007	Capacitor Disc 10pfd	1
C23	025174	Capacitor Disc 22pfd	1
C32	022890	Capacitor Disc 47pfd	1
C33,36	023049	Capacitor Disc 470pfd	2
C35,45	023008	Capacitor Disc 33pfd	2
C21,22,29,34,	022899	Capacitor Elec 1ufd 50V	4
40,43,47	022899	Capacitor Elec 1ufd 50V	3
C3,5,8,10,13,15,	021105	Capacitor Elec 25V 10ufd (12total)	6
16,24,25,31,33,42	021105	Capacitor Elec 25V 10ufd (12total)	6
C51	025183	Capacitor Elec 100ufd 25V	1
C52	022904	Capacitor Elec 330ufd 16V	1
C49,50	025428	Capacitor Elec 3300ufd 50V	2
C38	026962	Capacitor Elec NP 4.7ufd 50V	1
J1-6	022922	Jack (input-1,2,3/effects/lineout)	6
J7	022923	Jack (headphone)	1
J8	030321	Jack Dual Phono (stereo tape in)	1
CB1	027096	Circuit board fab. (not stuffed)	1
T1	030300	Power Transformer T61UC	1
S1	025279	Power On/Off Switch CTA-01	1
S2-4	025280	Reverb On/Off Switch (ch 1/2/3)	3
LP1	022926	Power Line Cord SJT-2.4M (Blk)	1
F1	022842	Fuse 2 Ampere 61M-2A	1
XF1	022924	Fuse Holder FH-032	1
FK1-5	025300	Knob FK-2 (Blk)	8
SPK	030330	Speaker 12" 8 ohms PFK-1220	1
HPK	030331	Speaker 4.5" PF-523M	1
RVP	025269	Reverb Pan SR01542CE/HS300C	1
CBN	030332	Cabinet CAB-SKKB-60	1
CS1	030327	Chassis C-SKKB-60	1

FENDER SIDEKICK KEYBOARD 60 (023-2500-000)

PARTS LIST PAGE 3 OF 3

REFERENCE	PART #	DESCRIPTION	QTY
HS1	027061	Heatsink HS-SK-1001	1
FPL	030322	Front Panel FP-SKKB-60	1
BPL	030324	Rear Panel BP-SKKB-60	1
HS1	025318	Handle HSK-FE	1
HC1,2	019276	Handle Cap HCSK-20	2
CN1-6	024695	Corner CFE-1	6
GL1-4	025317	Glide Assembly PFSK-50	4
PCS	023088	P.C.B. Support PCB-4L	1
NPL	030326	Name Plate NP-SKKB-60	1
FL-2	011298	Fender Logo	1
CRB	025301	Cord Bushing 6N-4	1
WSK	030337	Wire Assembly W-SKKB-60	1
OM-1	030334	Owners Manual MA-SKKB60	1

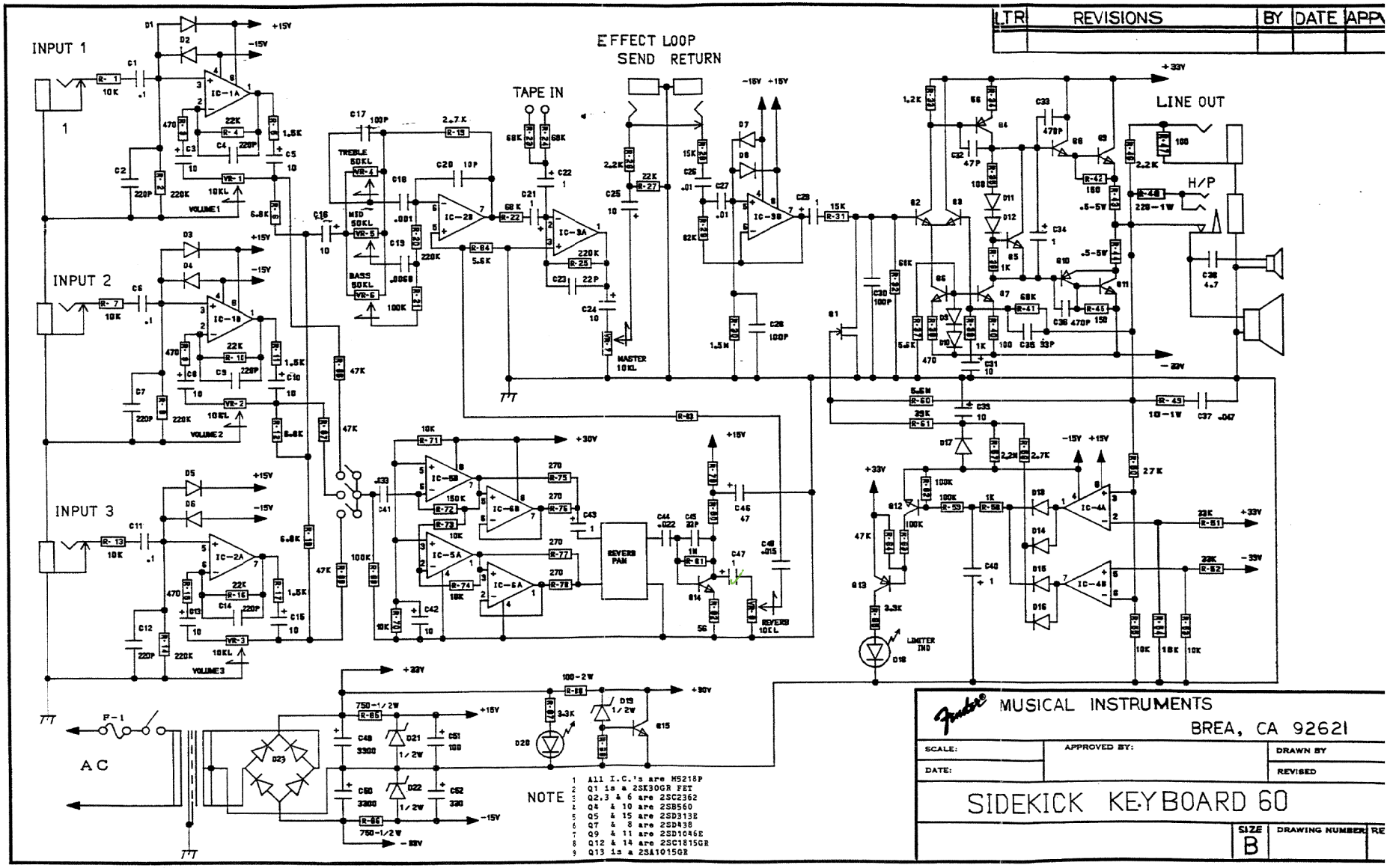
INPUT 1
INPUT 2
INPUT 3
EFFECT LOOP
SEND RETURN
TAPE IN
LINE OUT
H/P
AC
REVERB PAN
MASTER 10KL
REVERB 10KL
LIMITER IND
VOLUME 1
VOLUME 2
VOLUME 3
TREBLE 50KL
MID 50KL
BASS 50KL
LTR
REVISIONS
BY
DATE
APP
MUSICAL INSTRUMENTS
BREA, CA 92621
SCALE:
APPROVED BY:
DRAWN BY
DATE:
REVISED
SIDEKICK KEYBOARD 60
SIZE
B
DRAWING NUMBER
NOTE
1 All I.C.'s are M5218P
2 Q1 is a 2SK30GR FET
3 Q2,3 & 6 are 2SC2362
4 Q4 & 10 are 2SB560
5 Q5 & 15 are 2SD313E
6 Q7 & 8 are 2SD438
7 Q9 & 11 are 2SD1046E
8 Q12 & 14 are 2SC1815GR
9 Q13 is a 2SA1015GR