GOA9C

SERVICE MANUAL

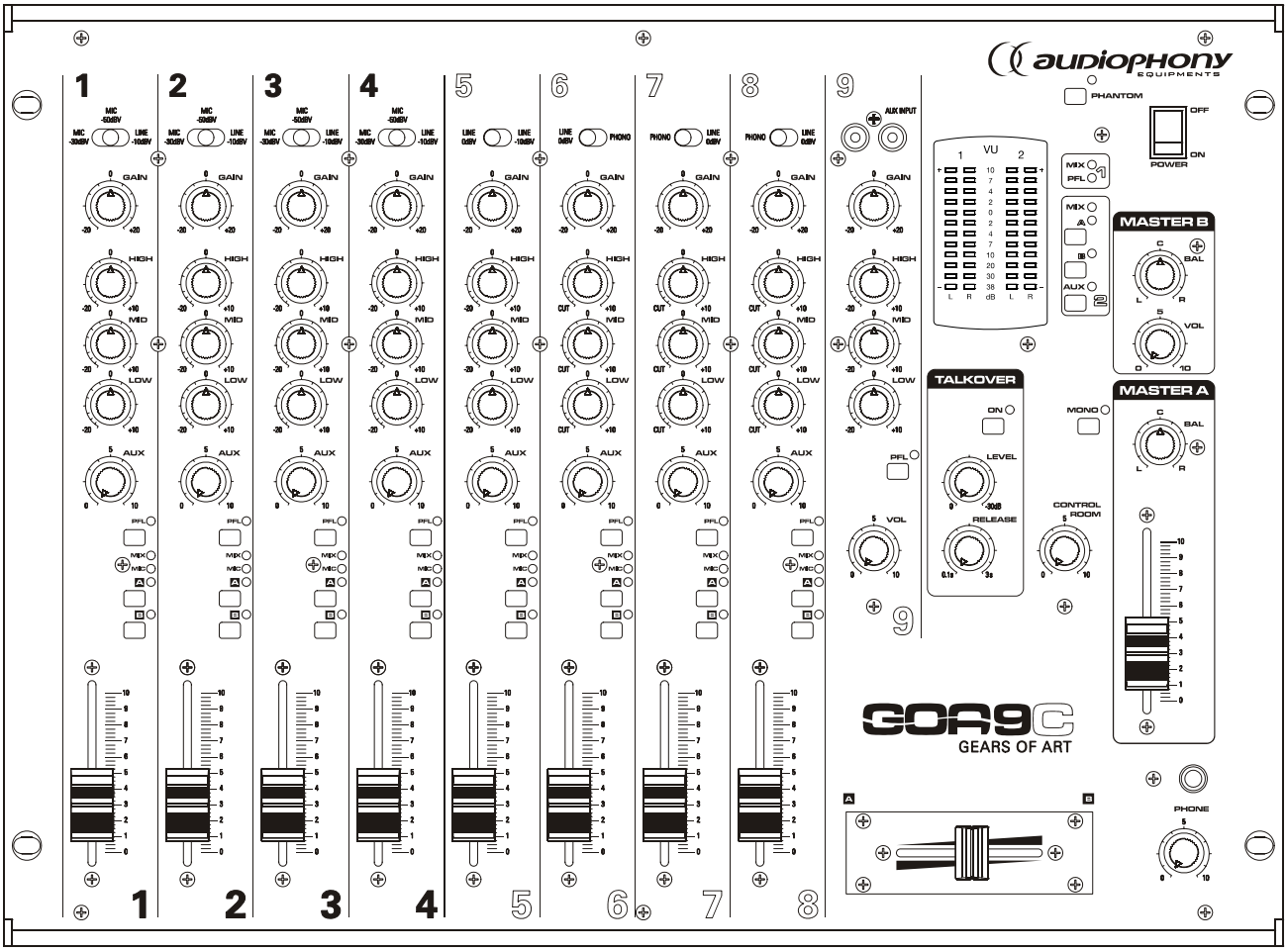

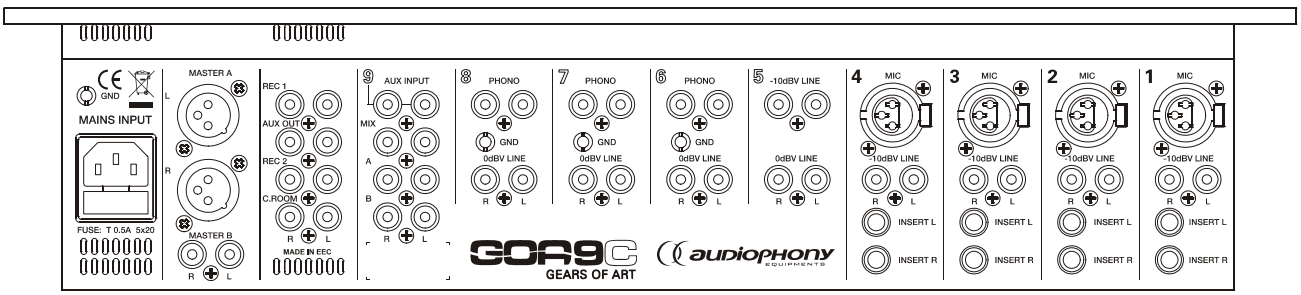

audiophony
EQUIPMENTS

SERVICE MANUAL GOA9C

INDEX

- BLOCK DIAGRAM
- SCHEMATICS
- COMPONENTS LOCATION SCHEMA
- TECHNICAL CHARACTERISTICS
- WIRING DIAGRAM
- CONFIGURATION DIAGRAM
- MECHANICAL DIAGRAM
- PACKING DIAGRAM

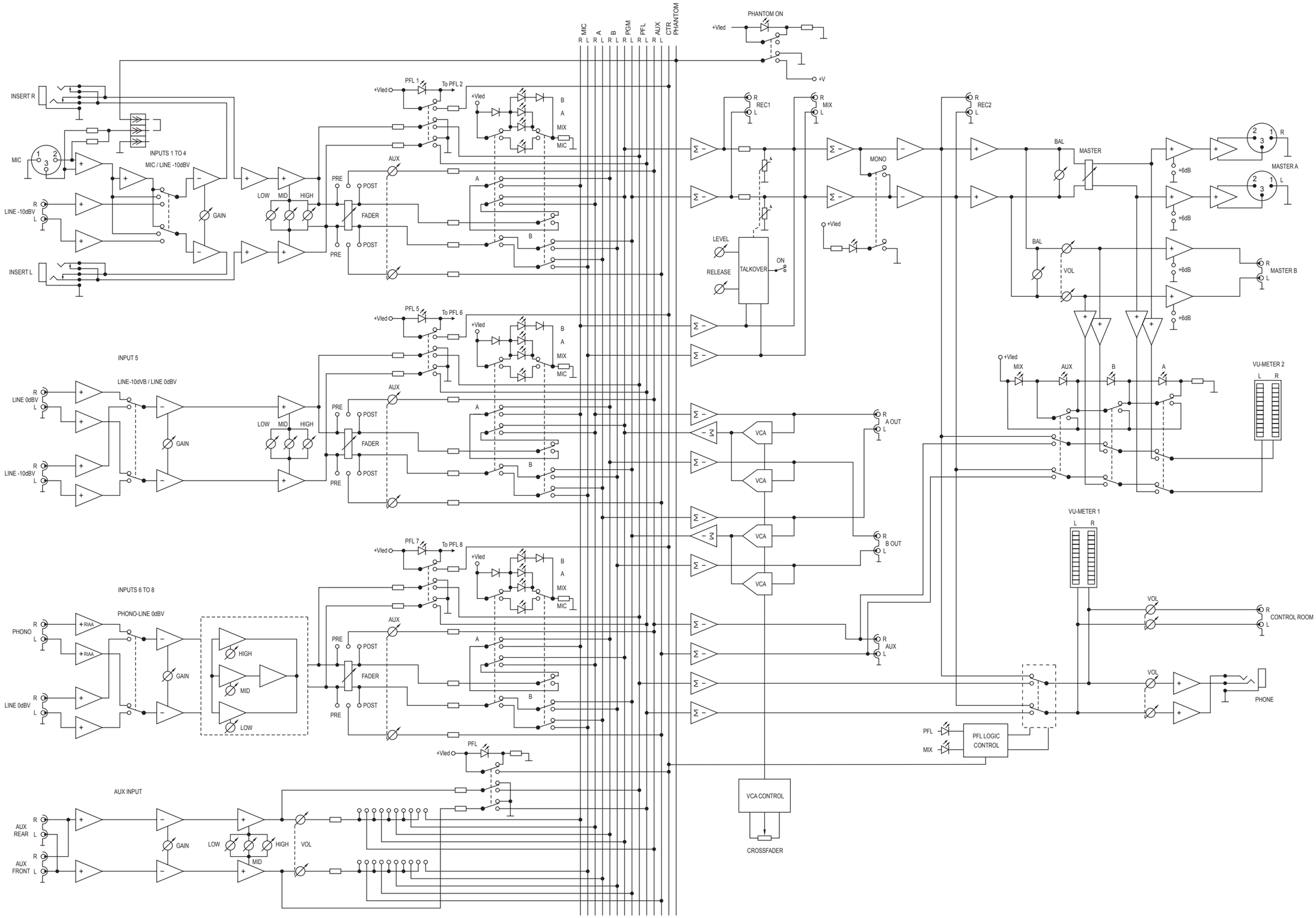

	drawn:	date:	project: M05-01	product:
number: 10.0980 version 01.00	approved:	title: BLOCK DIAGRAM (HIT MUSIC)		

Mic–Line Inputs

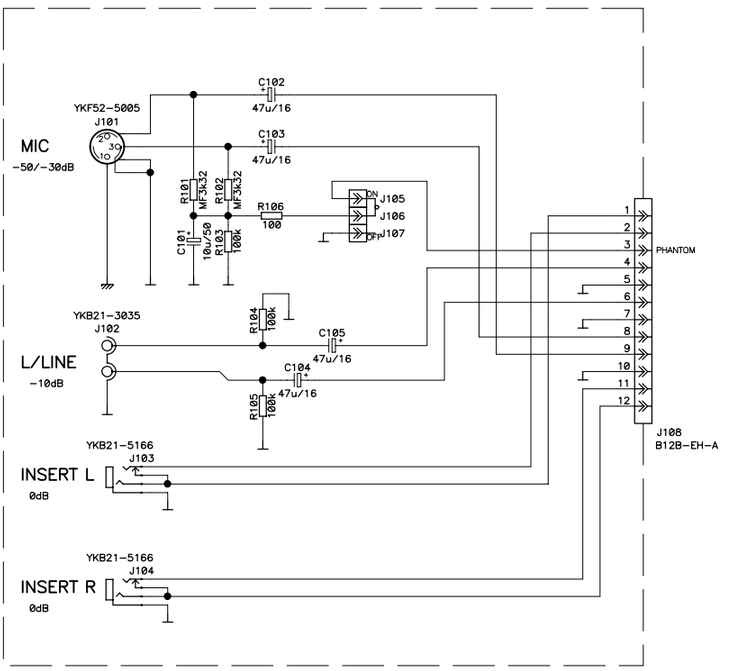

Printed Board 11.0877

		drawn by:	date:	approved:
		project n:	title:	
		product n:	Mic–Line Inputs Sch.	
number: 10.0562	version: 01.02	page:		

Line – Line Inputs

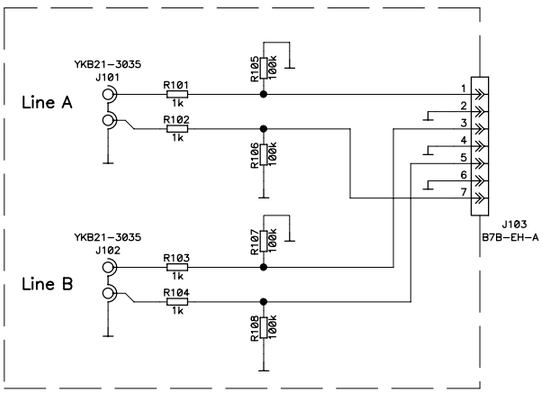

Printed Board 11.0882

		drawn by:	date:	approved:
		project n:	title: Line–Line Input Sch.	
		product n:		
number: 10.0567	version: 01.01	page:		

Phono – Line

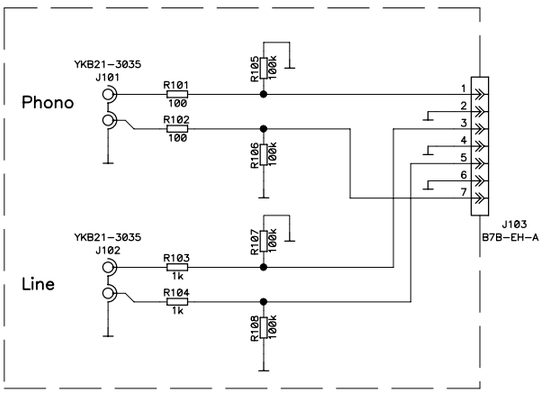

Printed Board 11.0882

		drawn by:	date:	approved:
		project n:	title: Phono–Line Input Sch.	
		product n:		
number: 10.0587	version: 01.01	page:		

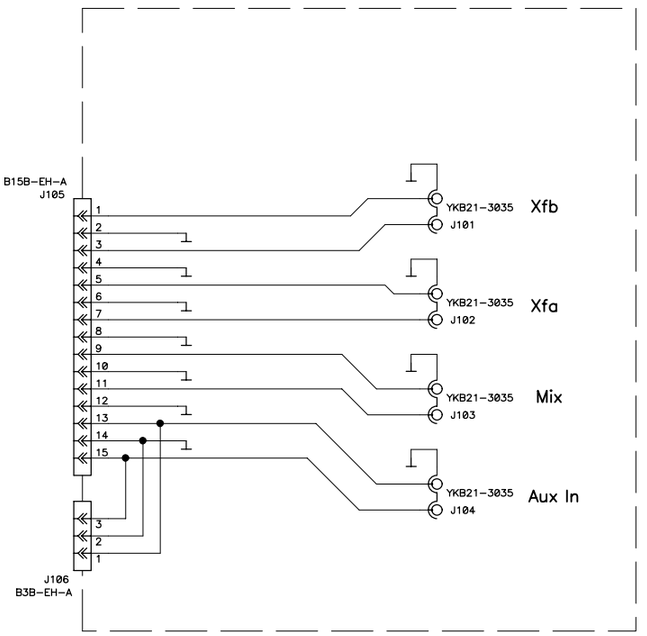

Printed Board 11.0885

		drawn by:	date:	approved:
		project n:	title:	
		product n:	Aux In–Mix–Xfa–Xfb Sch.	
number: 10.0594	version: 01.00	page:		

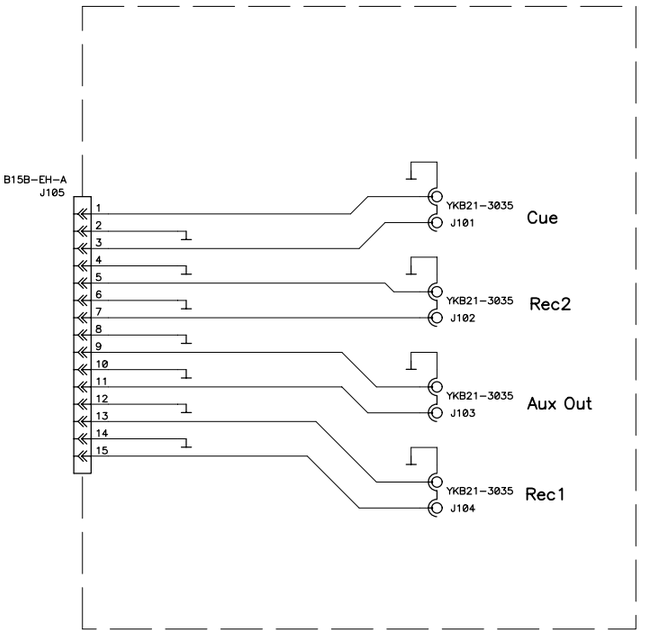

Printed Board 11.0885

		drawn by:	date:	approved:
		project n:	title:	
		product n:	Rec1/2–Aux–Cue Sch.	
number: 10.0595	version: 01.00	page:		

XLR+RCA Outputs

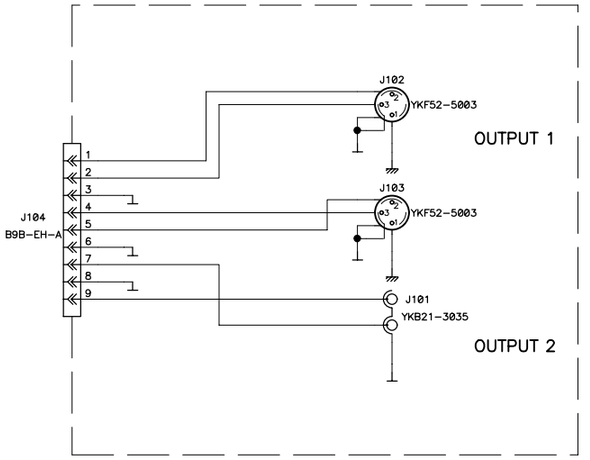

Printed Board 11.0886

		drawn by:	date:	approved:
		project n:	title:	
		product n:	XLR+RCA Outputs Sch.	
number: 10.0571	version: 01.01	page:		

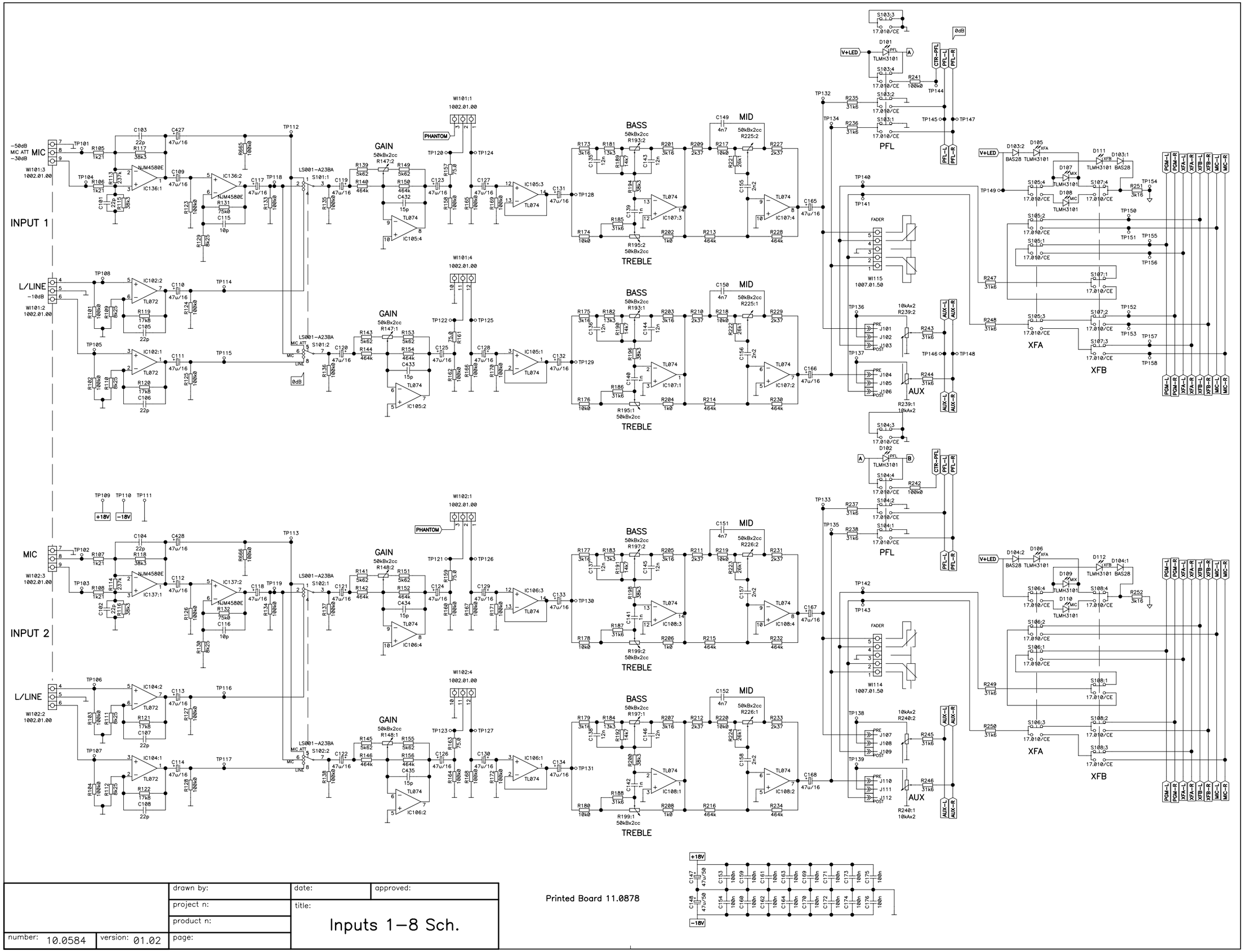

	drawn by:	date:	approved:
	project n:	title: Inputs 1–8 Sch.	
	product n:		
number: 10.0584	version: 01.02	page:	

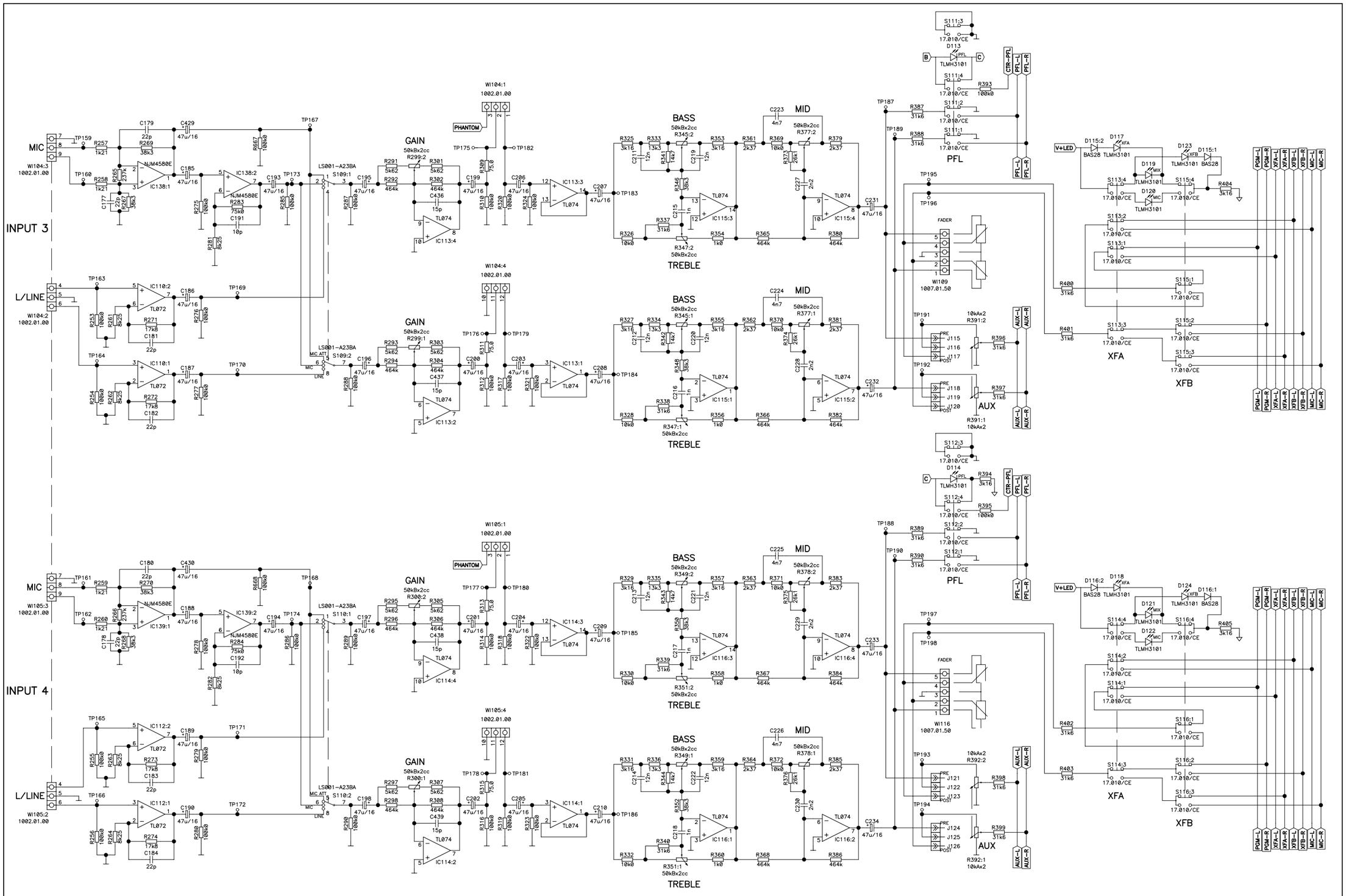

	drawn by:	date:	approved:
	project n:	title: Inputs 1–8 Sch.	
	product n:		
number: 10.0584	version: 01.02	page:	

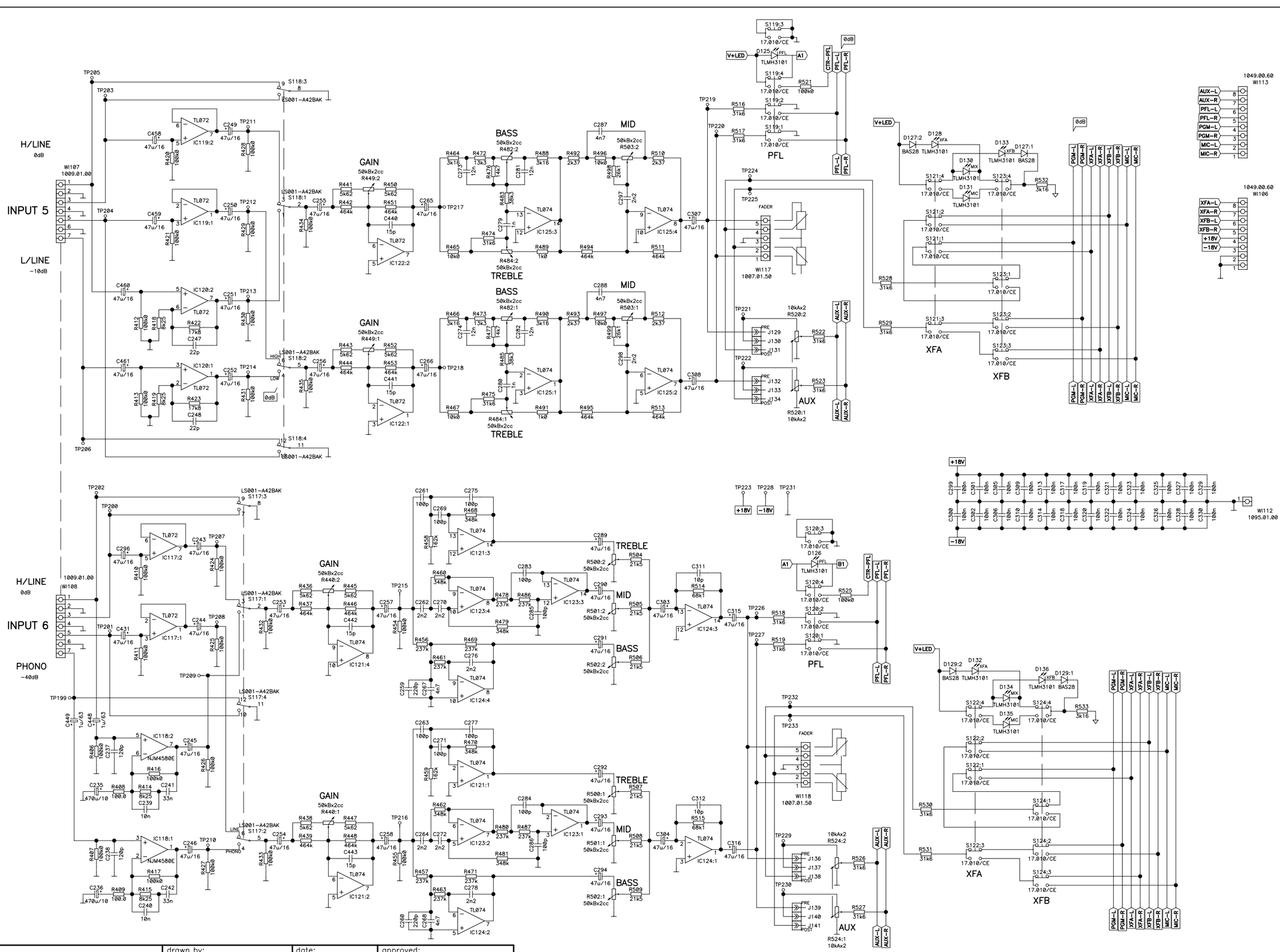

	drawn by:	date:	approved:
	project n:	title: Inputs 1–8 Sch.	
	product n:		
number: 10.0584	version: 01.02	page:	

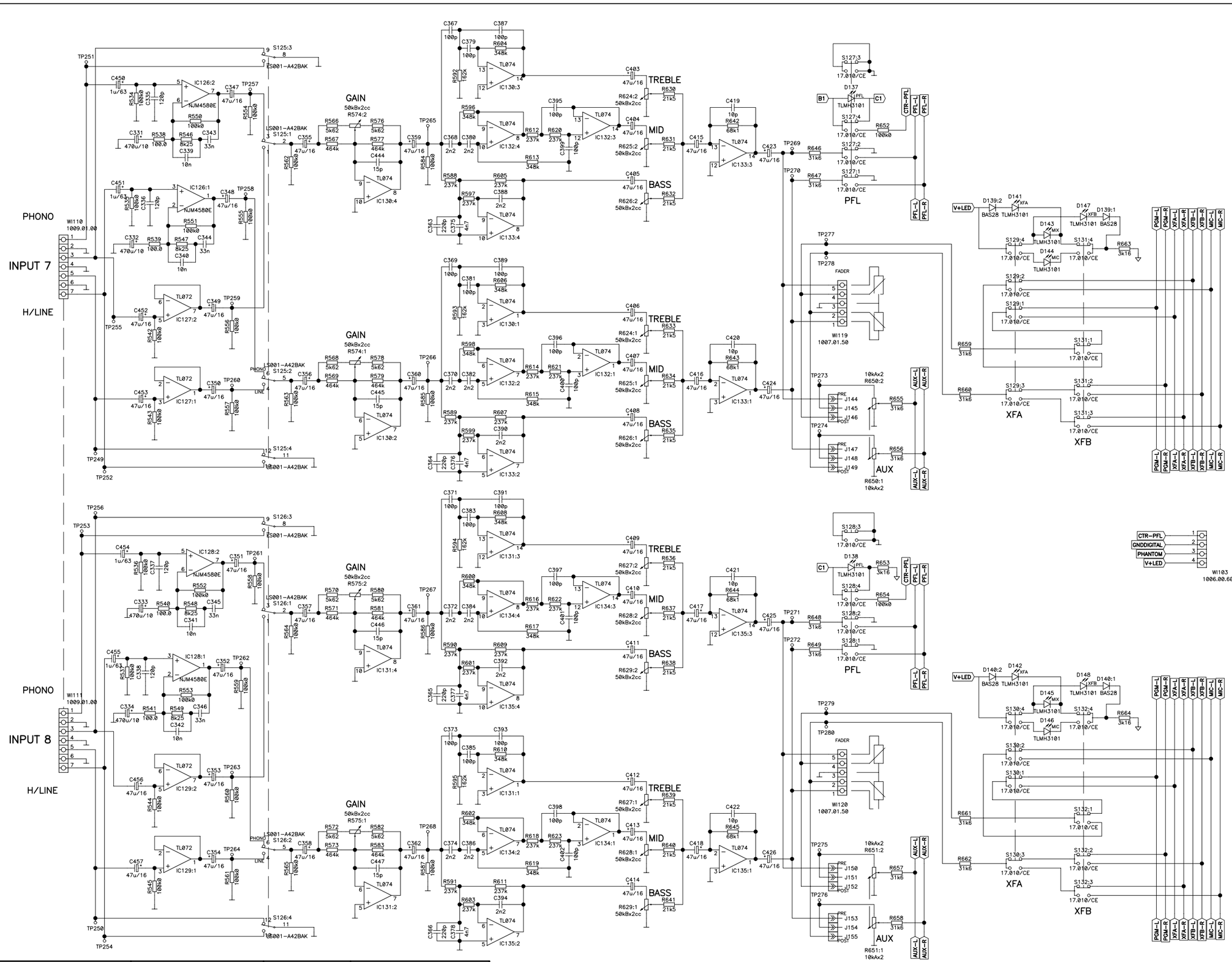

	drawn by:	date:	approved:
	project n:	title: Inputs 1–8 Sch.	
	product n:		
number: 10.0584	version: 01.02	page:	

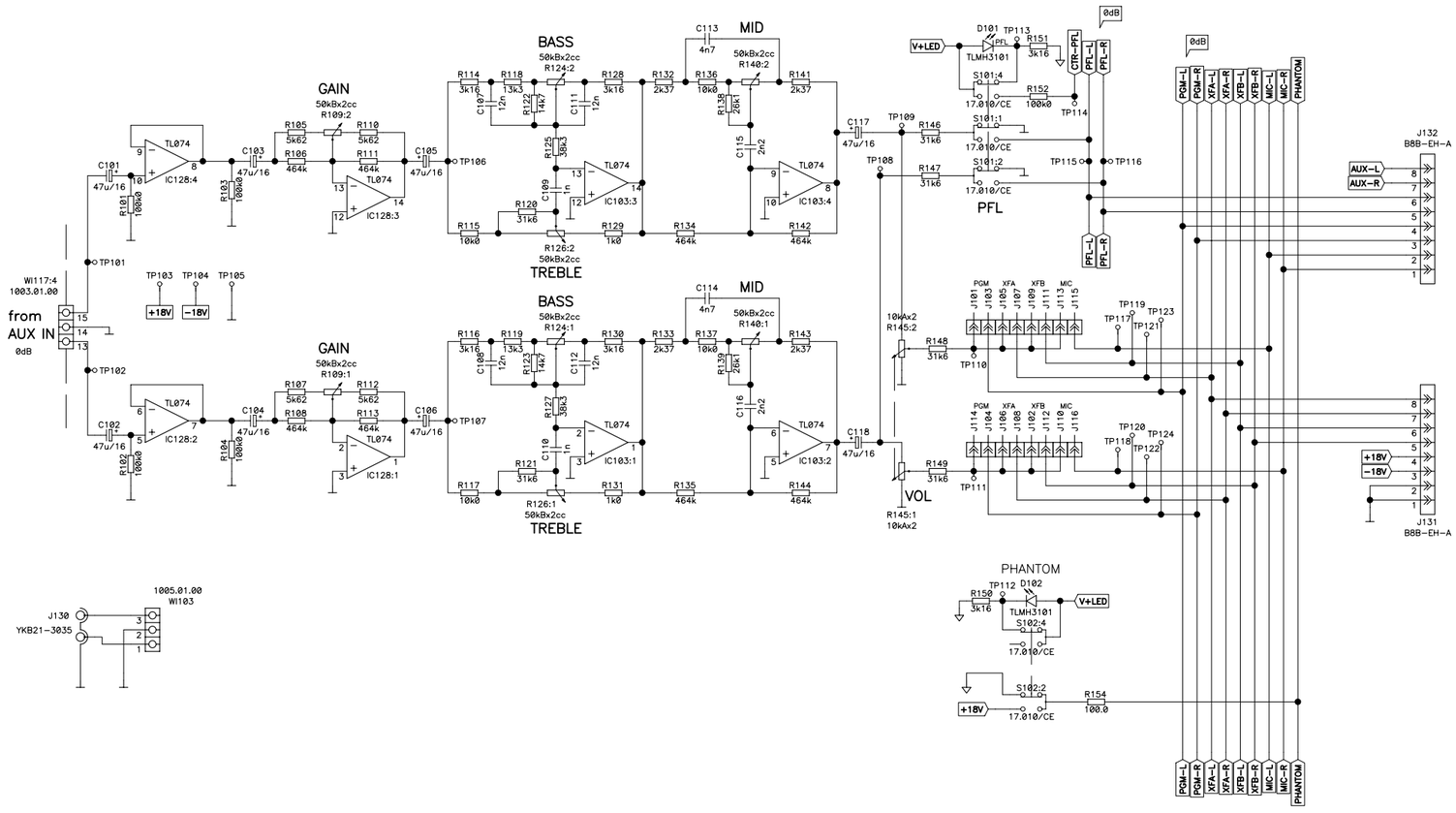

	drawn by:	date:	approved:
	project n:	title: Aux. Input Sch.	
	product n:		
number: 10.0597	version: 01.04	page:	

Printed Board 11.0890

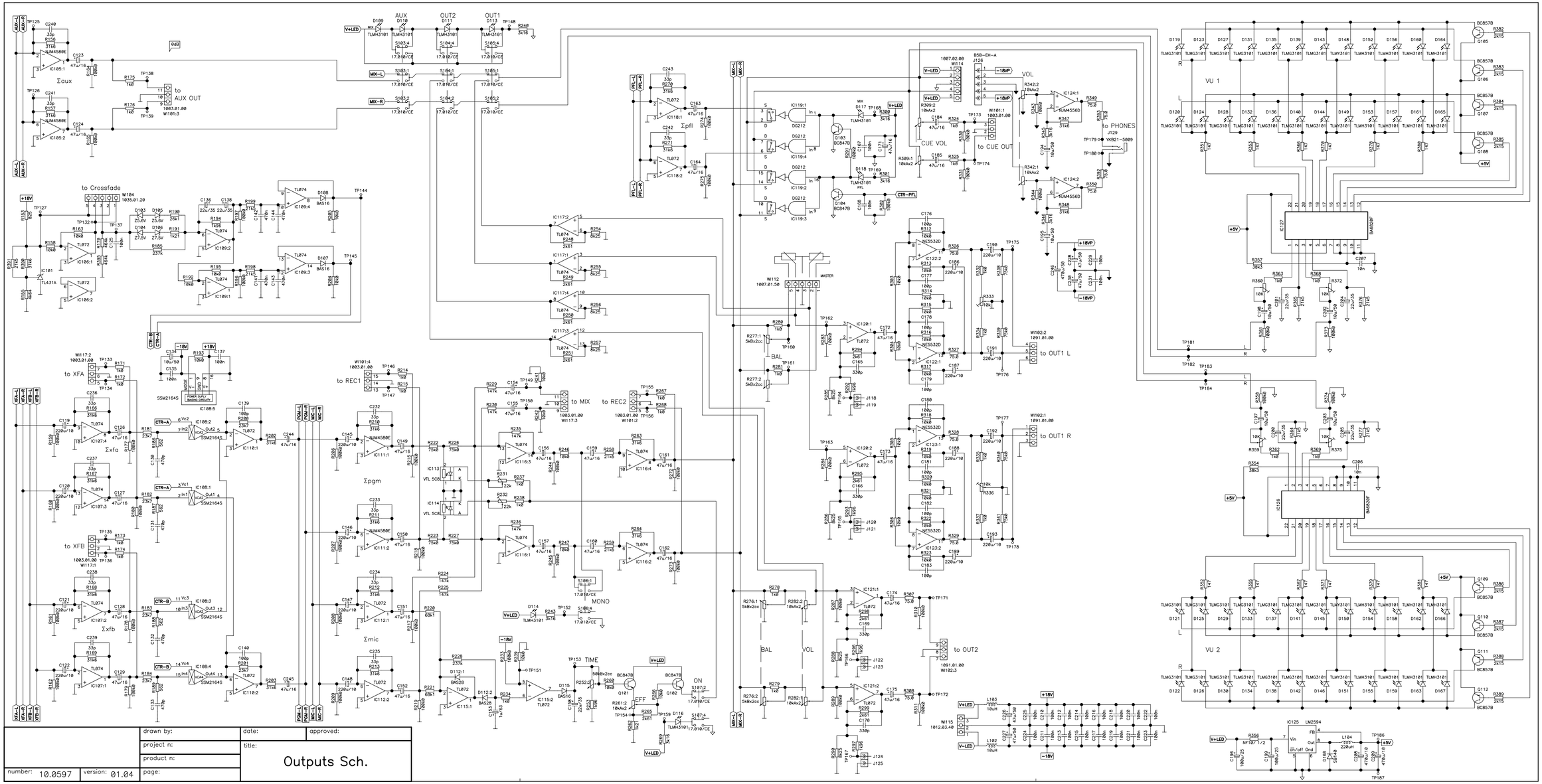

	drawn by:	date:	approved:
	project n:	title:	
	product n:	Outputs Sch.	
number: 10.0597	version: 01.04	page:	

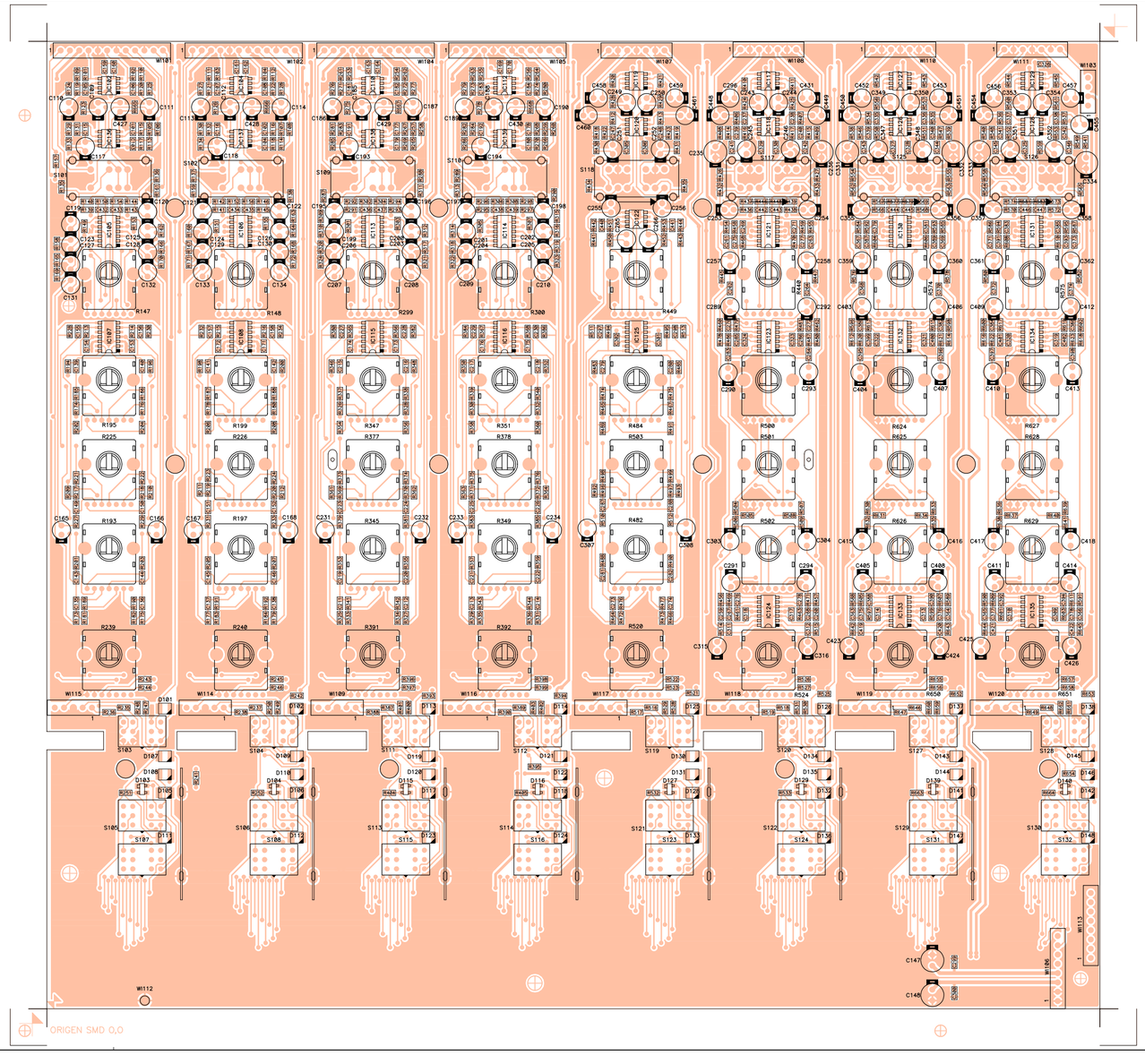

	related to: circuit no: 11.0878-05.00 schema no: 10.0584-01.02 insertion file no: 81.0062-01.02	side: Component view: Reference	
	project n:	title: Inputs Ct.	
number: 33.0678	version: 01.03	product n:	
drawn by: M. Amoros	date: 011105	approved:	

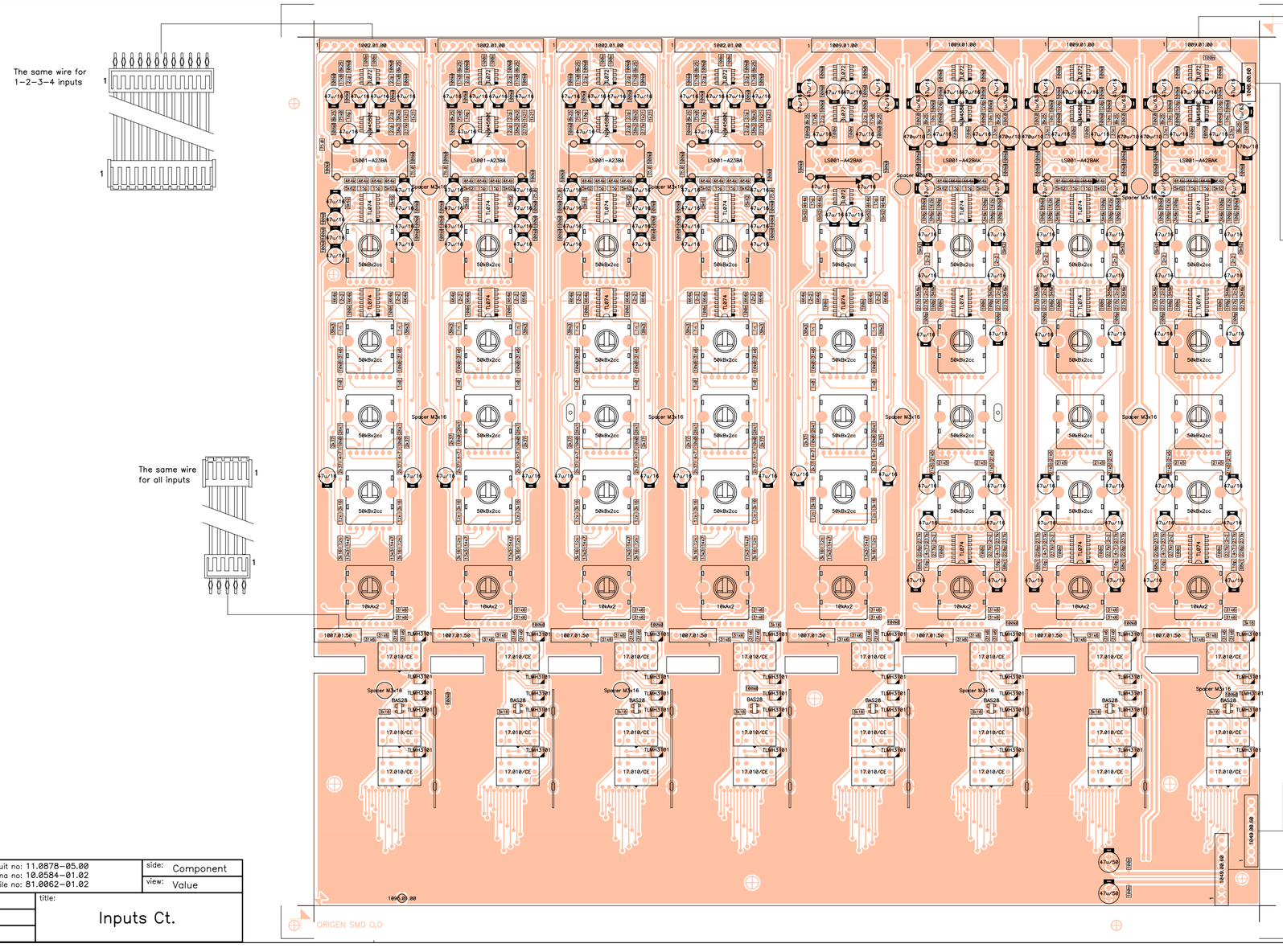

	related to: circuit no: 11.0878-05.00 schema no: 10.0584-01.02 insertion file no: 81.0862-01.02	side: Component view: Value	
	project n:	title: Inputs Ct.	
number: 33.0679	version: 01.03	product n:	
drawn by: M. Amoros	date: 011105	approved:	

PARTS LIST: PRINTED CIRCUIT 11.0878.05.00

Code	Description	Reference
FCXCD12200	22p	C101
FCXCD12200	22p	C102
FCXCD12200	22p	C103
FCXCD12200	22p	C104
FCXCD12200	22p	C105
FCXCD12200	22p	C106
FCXCD12200	22p	C107
FCXCD12200	22p	C108
FCCE100000	47u/16	C109
FCCE100000	47u/16	C110
FCCE100000	47u/16	C111
FCCE100000	47u/16	C112
FCCE100000	47u/16	C113
FCCE100000	47u/16	C114
FCXCD11000	10p	C115
FCXCD11000	10p	C116
FCCE100000	47u/16	C117
FCCE100000	47u/16	C118
FCCE100000	47u/16	C119
FCCE100000	47u/16	C120
FCCE100000	47u/16	C121
FCCE100000	47u/16	C122
FCCE100000	47u/16	C123
FCCE100000	47u/16	C124
FCCE100000	47u/16	C125
FCCE100000	47u/16	C126
FCCE100000	47u/16	C127
FCCE100000	47u/16	C128
FCCE100000	47u/16	C129
FCCE100000	47u/16	C130
FCCE100000	47u/16	C131
FCCE100000	47u/16	C132
FCCE100000	47u/16	C133
FCCE100000	47u/16	C134
FCXCD40120	12n	C135
FCXCD40120	12n	C136
FCXCD40120	12n	C137
FCXCD40120	12n	C138
FCXCD40010	1n	C139
FCXCD40010	1n	C140
FCXCD40010	1n	C141
FCXCD40010	1n	C142
FCXCD40120	12n	C143
FCXCD40120	12n	C144
FCXCD40120	12n	C145
FCXCD40120	12n	C146
FCCE250470	47u/50	C147
FCCE250470	47u/50	C148
FCXCD40047	4n7	C149
FCXCD40047	4n7	C150
FCXCD40047	4n7	C151
FCXCD40047	4n7	C152
FCXCD41000	100n	C153
FCXCD41000	100n	C154
FCXCD40022	2n2	C155
FCXCD40022	2n2	C156

Code	Description	Reference
FCXCD40022	2n2	C157
FCXCD40022	2n2	C158
FCXCD41000	100n	C159
FCXCD41000	100n	C160
FCXCD41000	100n	C161
FCXCD41000	100n	C162
FCXCD41000	100n	C163
FCXCD41000	100n	C164
FCCE100000	47u/16	C165
FCCE100000	47u/16	C166
FCCE100000	47u/16	C167
FCCE100000	47u/16	C168
FCXCD41000	100n	C169
FCXCD41000	100n	C170
FCXCD41000	100n	C171
FCXCD41000	100n	C172
FCXCD41000	100n	C173
FCXCD41000	100n	C174
FCXCD41000	100n	C175
FCXCD41000	100n	C176
FCXCD12200	22p	C177
FCXCD12200	22p	C178
FCXCD12200	22p	C179
FCXCD12200	22p	C180
FCXCD12200	22p	C181
FCXCD12200	22p	C182
FCXCD12200	22p	C183
FCXCD12200	22p	C184
FCCE100000	47u/16	C185
FCCE100000	47u/16	C186
FCCE100000	47u/16	C187
FCCE100000	47u/16	C188
FCCE100000	47u/16	C189
FCCE100000	47u/16	C190
FCXCD11000	10p	C191
FCXCD11000	10p	C192
FCCE100000	47u/16	C193
FCCE100000	47u/16	C194
FCCE100000	47u/16	C195
FCCE100000	47u/16	C196
FCCE100000	47u/16	C197
FCCE100000	47u/16	C198
FCCE100000	47u/16	C199
FCCE100000	47u/16	C200
FCCE100000	47u/16	C201
FCCE100000	47u/16	C202
FCCE100000	47u/16	C203
FCCE100000	47u/16	C204
FCCE100000	47u/16	C205
FCCE100000	47u/16	C206
FCCE100000	47u/16	C207
FCCE100000	47u/16	C208
FCCE100000	47u/16	C209
FCCE100000	47u/16	C210
FCXCD40120	12n	C211
FCXCD40120	12n	C212

Code	Description	Reference
FCXCD40120	12n	C213
FCXCD40120	12n	C214
FCXCD40010	1n	C215
FCXCD40010	1n	C216
FCXCD40010	1n	C217
FCXCD40010	1n	C218
FCXCD40120	12n	C219
FCXCD40120	12n	C220
FCXCD40120	12n	C221
FCXCD40120	12n	C222
FCXCD40047	4n7	C223
FCXCD40047	4n7	C224
FCXCD40047	4n7	C225
FCXCD40047	4n7	C226
FCXCD40022	2n2	C227
FCXCD40022	2n2	C228
FCXCD40022	2n2	C229
FCXCD40022	2n2	C230
FCCE100000	47u/16	C231
FCCE100000	47u/16	C232
FCCE100000	47u/16	C233
FCCE100000	47u/16	C234
FCCE030000	470u/10	C235
FCCE030000	470u/10	C236
FCXCD21200	120p	C237
FCXCD21200	120p	C238
FCXCD40100	10n	C239
FCXCD40100	10n	C240
FCXCD40330	33n	C241
FCXCD40330	33n	C242
FCCE100000	47u/16	C243
FCCE100000	47u/16	C244
FCCE100000	47u/16	C245
FCCE100000	47u/16	C246
FCXCD12200	22p	C247
FCXCD12200	22p	C248
FCCE100000	47u/16	C249
FCCE100000	47u/16	C250
FCCE100000	47u/16	C251
FCCE100000	47u/16	C252
FCCE100000	47u/16	C253
FCCE100000	47u/16	C254
FCCE100000	47u/16	C255
FCCE100000	47u/16	C256
FCCE100000	47u/16	C257
FCCE100000	47u/16	C258
FCXCD22200	220p	C259
FCXCD22200	220p	C260
FCXCD21000	100p	C261
FCXCD40022	2n2	C262
FCXCD21000	100p	C263
FCXCD40022	2n2	C264
FCCE100000	47u/16	C265
FCCE100000	47u/16	C266
FCXCD40047	4n7	C267
FCXCD40047	4n7	C268

Code	Description	Reference
FCXCD21000	100p	C269
FCXCD40022	2n2	C270
FCXCD21000	100p	C271
FCXCD40022	2n2	C272
FCXCD40120	12n	C273
FCXCD40120	12n	C274
FCXCD21000	100p	C275
FCXCD40022	2n2	C276
FCXCD21000	100p	C277
FCXCD40022	2n2	C278
FCXCD40010	1n	C279
FCXCD40010	1n	C280
FCXCD40120	12n	C281
FCXCD40120	12n	C282
FCXCD21000	100p	C283
FCXCD21000	100p	C284
FCXCD21000	100p	C285
FCXCD21000	100p	C286
FCXCD40047	4n7	C287
FCXCD40047	4n7	C288
FCCE100000	47u/16	C289
FCCE100000	47u/16	C290
FCCE100000	47u/16	C291
FCCE100000	47u/16	C292
FCCE100000	47u/16	C293
FCCE100000	47u/16	C294
FCCE100000	47u/16	C296
FCXCD40022	2n2	C297
FCXCD40022	2n2	C298
FCXCD41000	100n	C299
FCXCD41000	100n	C300
FCXCD41000	100n	C301
FCXCD41000	100n	C302
FCCE100000	47u/16	C303
FCCE100000	47u/16	C304
FCXCD41000	100n	C305
FCXCD41000	100n	C306
FCCE100000	47u/16	C307
FCCE100000	47u/16	C308
FCXCD41000	100n	C309
FCXCD41000	100n	C310
FCXCD11000	10p	C311
FCXCD11000	10p	C312
FCXCD41000	100n	C313
FCXCD41000	100n	C314
FCCE100000	47u/16	C315
FCCE100000	47u/16	C316
FCXCD41000	100n	C317
FCXCD41000	100n	C318
FCXCD41000	100n	C319
FCXCD41000	100n	C320
FCXCD41000	100n	C321
FCXCD41000	100n	C322
FCXCD41000	100n	C323
FCXCD41000	100n	C324
FCXCD41000	100n	C325

Code	Description	Reference
FCXCD41000	100n	C326
FCXCD41000	100n	C327
FCXCD41000	100n	C328
FCXCD41000	100n	C329
FCXCD41000	100n	C330
FCCE030000	470u/10	C331
FCCE030000	470u/10	C332
FCCE030000	470u/10	C333
FCCE030000	470u/10	C334
FCXCD21200	120p	C335
FCXCD21200	120p	C336
FCXCD21200	120p	C337
FCXCD21200	120p	C338
FCXCD40100	10n	C339
FCXCD40100	10n	C340
FCXCD40100	10n	C341
FCXCD40100	10n	C342
FCXCD40330	33n	C343
FCXCD40330	33n	C344
FCXCD40330	33n	C345
FCXCD40330	33n	C346
FCCE100000	47u/16	C347
FCCE100000	47u/16	C348
FCCE100000	47u/16	C349
FCCE100000	47u/16	C350
FCCE100000	47u/16	C351
FCCE100000	47u/16	C352
FCCE100000	47u/16	C353
FCCE100000	47u/16	C354
FCCE100000	47u/16	C355
FCCE100000	47u/16	C356
FCCE100000	47u/16	C357
FCCE100000	47u/16	C358
FCCE100000	47u/16	C359
FCCE100000	47u/16	C360
FCCE100000	47u/16	C361
FCCE100000	47u/16	C362
FCXCD22200	220p	C363
FCXCD22200	220p	C364
FCXCD22200	220p	C365
FCXCD22200	220p	C366
FCXCD21000	100p	C367
FCXCD40022	2n2	C368
FCXCD21000	100p	C369
FCXCD40022	2n2	C370
FCXCD21000	100p	C371
FCXCD40022	2n2	C372
FCXCD21000	100p	C373
FCXCD40022	2n2	C374
FCXCD40047	4n7	C375
FCXCD40047	4n7	C376
FCXCD40047	4n7	C377
FCXCD40047	4n7	C378
FCXCD21000	100p	C379
FCXCD40022	2n2	C380
FCXCD21000	100p	C381

Code	Description	Reference
FCXCD40022	2n2	C382
FCXCD21000	100p	C383
FCXCD40022	2n2	C384
FCXCD21000	100p	C385
FCXCD40022	2n2	C386
FCXCD21000	100p	C387
FCXCD40022	2n2	C388
FCXCD21000	100p	C389
FCXCD40022	2n2	C390
FCXCD21000	100p	C391
FCXCD40022	2n2	C392
FCXCD21000	100p	C393
FCXCD40022	2n2	C394
FCXCD21000	100p	C395
FCXCD21000	100p	C396
FCXCD21000	100p	C397
FCXCD21000	100p	C398
FCXCD21000	100p	C399
FCXCD21000	100p	C400
FCXCD21000	100p	C401
FCXCD21000	100p	C402
FCCE100000	47u/16	C403
FCCE100000	47u/16	C404
FCCE100000	47u/16	C405
FCCE100000	47u/16	C406
FCCE100000	47u/16	C407
FCCE100000	47u/16	C408
FCCE100000	47u/16	C409
FCCE100000	47u/16	C410
FCCE100000	47u/16	C411
FCCE100000	47u/16	C412
FCCE100000	47u/16	C413
FCCE100000	47u/16	C414
FCCE100000	47u/16	C415
FCCE100000	47u/16	C416
FCCE100000	47u/16	C417
FCCE100000	47u/16	C418
FCXCD11000	10p	C419
FCXCD11000	10p	C420
FCXCD11000	10p	C421
FCXCD11000	10p	C422
FCCE100000	47u/16	C423
FCCE100000	47u/16	C424
FCCE100000	47u/16	C425
FCCE100000	47u/16	C426
FCCE100000	47u/16	C427
FCCE100000	47u/16	C428
FCCE100000	47u/16	C429
FCCE100000	47u/16	C430
FCCE100000	47u/16	C431
FCXCD11500	15p	C432
FCXCD11500	15p	C433
FCXCD11500	15p	C434
FCXCD11500	15p	C435
FCXCD11500	15p	C436
FCXCD11500	15p	C437

PARTS LIST: PRINTED CIRCUIT 11.0878.05.00

Code	Description	Reference
FCXCD11500	15p	C438
FCXCD11500	15p	C439
FCXCD11500	15p	C440
FCXCD11500	15p	C441
FCXCD11500	15p	C442
FCXCD11500	15p	C443
FCXCD11500	15p	C444
FCXCD11500	15p	C445
FCXCD11500	15p	C446
FCXCD11500	15p	C447
FCCE300010	1u/63	C448
FCCE300010	1u/63	C449
FCCE300010	1u/63	C450
FCCE300010	1u/63	C451
FCCE100000	47u/16	C452
FCCE100000	47u/16	C453
FCCE300010	1u/63	C454
FCCE300010	1u/63	C455
FCCE100000	47u/16	C456
FCCE100000	47u/16	C457
FCCE100000	47u/16	C458
FCCE100000	47u/16	C459
FCCE100000	47u/16	C460
FCCE100000	47u/16	C461
FCCIM08780	Printed Board 11.0878	CI101
FCLEDSMD20	TLMH3101	D101
FCLEDSMD20	TLMH3101	D102
FCXDDBAS28	BAS28	D103
FCXDDBAS28	BAS28	D104
FCLEDSMD20	TLMH3101	D105
FCLEDSMD20	TLMH3101	D106
FCLEDSMD20	TLMH3101	D107
FCLEDSMD20	TLMH3101	D108
FCLEDSMD20	TLMH3101	D109
FCLEDSMD20	TLMH3101	D110
FCLEDSMD20	TLMH3101	D111
FCLEDSMD20	TLMH3101	D112
FCLEDSMD20	TLMH3101	D113
FCLEDSMD20	TLMH3101	D114
FCXDDBAS28	BAS28	D115
FCXDDBAS28	BAS28	D116
FCLEDSMD20	TLMH3101	D117
FCLEDSMD20	TLMH3101	D118
FCLEDSMD20	TLMH3101	D119
FCLEDSMD20	TLMH3101	D120
FCLEDSMD20	TLMH3101	D121
FCLEDSMD20	TLMH3101	D122
FCLEDSMD20	TLMH3101	D123
FCLEDSMD20	TLMH3101	D124
FCLEDSMD20	TLMH3101	D125
FCLEDSMD20	TLMH3101	D126
FCXDDBAS28	BAS28	D127
FCLEDSMD20	TLMH3101	D128
FCXDDBAS28	BAS28	D129
FCLEDSMD20	TLMH3101	D130
FCLEDSMD20	TLMH3101	D131

Code	Description	Reference
FCLEDSMD20	TLMH3101	D132
FCLEDSMD20	TLMH3101	D133
FCLEDSMD20	TLMH3101	D134
FCLEDSMD20	TLMH3101	D135
FCLEDSMD20	TLMH3101	D136
FCLEDSMD20	TLMH3101	D137
FCLEDSMD20	TLMH3101	D138
FCXDDBAS28	BAS28	D139
FCXDDBAS28	BAS28	D140
FCLEDSMD20	TLMH3101	D141
FCLEDSMD20	TLMH3101	D142
FCLEDSMD20	TLMH3101	D143
FCLEDSMD20	TLMH3101	D144
FCLEDSMD20	TLMH3101	D145
FCLEDSMD20	TLMH3101	D146
FCLEDSMD20	TLMH3101	D147
FCLEDSMD20	TLMH3101	D148
FCIC072010	TL072	IC102
FCIC072010	TL072	IC104
FCIC074010	TL074	IC105
FCIC074010	TL074	IC106
FCIC074010	TL074	IC107
FCIC074010	TL074	IC108
FCIC072010	TL072	IC110
FCIC072010	TL072	IC112
FCIC074010	TL074	IC113
FCIC074010	TL074	IC114
FCIC074010	TL074	IC115
FCIC074010	TL074	IC116
FCIC072010	TL072	IC117
FCIC4580E0	NJM4580E	IC118
FCIC072010	TL072	IC119
FCIC072010	TL072	IC120
FCIC074010	TL074	IC121
FCIC072010	TL072	IC122
FCIC074010	TL074	IC123
FCIC074010	TL074	IC124
FCIC074010	TL074	IC125
FCIC4580E0	NJM4580E	IC126
FCIC072010	TL072	IC127
FCIC4580E0	NJM4580E	IC128
FCIC072010	TL072	IC129
FCIC074010	TL074	IC130
FCIC074010	TL074	IC131
FCIC074010	TL074	IC132
FCIC074010	TL074	IC133
FCIC074010	TL074	IC134
FCIC074010	TL074	IC135
FCIC4580E0	NJM4580E	IC136
FCIC4580E0	NJM4580E	IC137
FCIC4580E0	NJM4580E	IC138
FCIC4580E0	NJM4580E	IC139
FCXR551000	100k0	R101
FCXR551000	100k0	R102
FCXR551000	100k0	R103
FCXR551000	100k0	R104

PARTS LIST: PRINTED CIRCUIT 11.0878.05.00

Code	Description	Reference
FCXR531210	1k21	R105
FCXR531210	1k21	R106
FCXR531210	1k21	R107
FCXR531210	1k21	R108
FCXR538250	8k25	R109
FCXR538250	8k25	R110
FCXR538250	8k25	R111
FCXR538250	8k25	R112
FCXR552370	237k	R113
FCXR552370	237k	R114
FCXR543830	38k3	R115
FCXR543830	38k3	R116
FCXR543830	38k3	R117
FCXR543830	38k3	R118
FCXR541780	17k8	R119
FCXR541780	17k8	R120
FCXR541780	17k8	R121
FCXR541780	17k8	R122
FCXR551000	100k0	R123
FCXR551000	100k0	R124
FCXR551000	100k0	R125
FCXR551000	100k0	R126
FCXR551000	100k0	R127
FCXR551000	100k0	R128
FCXR538250	8k25	R129
FCXR538250	8k25	R130
FCXR547500	75k0	R131
FCXR547500	75k0	R132
FCXR551000	100k0	R133
FCXR551000	100k0	R134
FCXR551000	100k0	R135
FCXR551000	100k0	R136
FCXR551000	100k0	R137
FCXR551000	100k0	R138
FCXR535620	5k62	R139
FCXR554640	464k	R140
FCXR535620	5k62	R141
FCXR554640	464k	R142
FCXR535620	5k62	R143
FCXR554640	464k	R144
FCXR535620	5k62	R145
FCXR554640	464k	R146
FCPR217031	50kBx2cc	R147
FCPR217031	50kBx2cc	R148
FCXR535620	5k62	R149
FCXR554640	464k	R150
FCXR535620	5k62	R151
FCXR554640	464k	R152
FCXR535620	5k62	R153
FCXR554640	464k	R154
FCXR535620	5k62	R155
FCXR554640	464k	R156
FCXR517500	75.0	R157
FCXR551000	100k0	R158
FCXR517500	75.0	R159
FCXR551000	100k0	R160

Code	Description	Reference
FCXR517500	75.0	R161
FCXR551000	100k0	R162
FCXR517500	75.0	R163
FCXR551000	100k0	R164
FCXR551000	100k0	R165
FCXR551000	100k0	R166
FCXR551000	100k0	R167
FCXR551000	100k0	R168
FCXR551000	100k0	R169
FCXR551000	100k0	R170
FCXR551000	100k0	R171
FCXR551000	100k0	R172
FCXR533160	3k16	R173
FCXR541000	10k0	R174
FCXR533160	3k16	R175
FCXR541000	10k0	R176
FCXR533160	3k16	R177
FCXR541000	10k0	R178
FCXR533160	3k16	R179
FCXR541000	10k0	R180
FCXR541330	13k3	R181
FCXR541330	13k3	R182
FCXR541330	13k3	R183
FCXR541330	13k3	R184
FCXR543160	31k6	R185
FCXR543160	31k6	R186
FCXR543160	31k6	R187
FCXR543160	31k6	R188
FCXR541470	14k7	R189
FCXR541470	14k7	R190
FCXR541470	14k7	R191
FCXR541470	14k7	R192
FCPR217031	50kBx2cc	R193
FCXR543830	38k3	R194
FCPR217031	50kBx2cc	R195
FCXR543830	38k3	R196
FCPR217031	50kBx2cc	R197
FCXR543830	38k3	R198
FCPR217031	50kBx2cc	R199
FCXR543830	38k3	R200
FCXR533160	3k16	R201
FCXR531000	1k0	R202
FCXR533160	3k16	R203
FCXR531000	1k0	R204
FCXR533160	3k16	R205
FCXR531000	1k0	R206
FCXR533160	3k16	R207
FCXR531000	1k0	R208
FCXR532370	2k37	R209
FCXR532370	2k37	R210
FCXR532370	2k37	R211
FCXR532370	2k37	R212
FCXR554640	464k	R213
FCXR554640	464k	R214
FCXR554640	464k	R215
FCXR554640	464k	R216

PARTS LIST: PRINTED CIRCUIT 11.0878.05.00

Code	Description	Reference
FCXR541000	10k0	R217
FCXR541000	10k0	R218
FCXR541000	10k0	R219
FCXR541000	10k0	R220
FCXR542610	26k1	R221
FCXR542610	26k1	R222
FCXR542610	26k1	R223
FCXR542610	26k1	R224
FCPR217031	50kBx2cc	R225
FCPR217031	50kBx2cc	R226
FCXR532370	2k37	R227
FCXR554640	464k	R228
FCXR532370	2k37	R229
FCXR554640	464k	R230
FCXR532370	2k37	R231
FCXR554640	464k	R232
FCXR532370	2k37	R233
FCXR554640	464k	R234
FCXR543160	31k6	R235
FCXR543160	31k6	R236
FCXR543160	31k6	R237
FCXR543160	31k6	R238
FCPR210051	10kAx2	R239
FCPR210051	10kAx2	R240
FCXR551000	100k0	R241
FCXR551000	100k0	R242
FCXR543160	31k6	R243
FCXR543160	31k6	R244
FCXR543160	31k6	R245
FCXR543160	31k6	R246
FCXR543160	31k6	R247
FCXR543160	31k6	R248
FCXR543160	31k6	R249
FCXR543160	31k6	R250
FCXR533160	3k16	R251
FCXR533160	3k16	R252
FCXR551000	100k0	R253
FCXR551000	100k0	R254
FCXR551000	100k0	R255
FCXR551000	100k0	R256
FCXR531210	1k21	R257
FCXR531210	1k21	R258
FCXR531210	1k21	R259
FCXR531210	1k21	R260
FCXR538250	8k25	R261
FCXR538250	8k25	R262
FCXR538250	8k25	R263
FCXR538250	8k25	R264
FCXR552370	237k	R265
FCXR552370	237k	R266
FCXR543830	38k3	R267
FCXR543830	38k3	R268
FCXR543830	38k3	R269
FCXR543830	38k3	R270
FCXR541780	17k8	R271
FCXR541780	17k8	R272

Code	Description	Reference
FCXR541780	17k8	R273
FCXR541780	17k8	R274
FCXR551000	100k0	R275
FCXR551000	100k0	R276
FCXR551000	100k0	R277
FCXR551000	100k0	R278
FCXR551000	100k0	R279
FCXR551000	100k0	R280
FCXR538250	8k25	R281
FCXR538250	8k25	R282
FCXR547500	75k0	R283
FCXR547500	75k0	R284
FCXR551000	100k0	R285
FCXR551000	100k0	R286
FCXR551000	100k0	R287
FCXR551000	100k0	R288
FCXR551000	100k0	R289
FCXR551000	100k0	R290
FCXR535620	5k62	R291
FCXR554640	464k	R292
FCXR535620	5k62	R293
FCXR554640	464k	R294
FCXR535620	5k62	R295
FCXR554640	464k	R296
FCXR535620	5k62	R297
FCXR554640	464k	R298
FCPR217031	50kBx2cc	R299
FCPR217031	50kBx2cc	R300
FCXR535620	5k62	R301
FCXR554640	464k	R302
FCXR535620	5k62	R303
FCXR554640	464k	R304
FCXR535620	5k62	R305
FCXR554640	464k	R306
FCXR535620	5k62	R307
FCXR554640	464k	R308
FCXR517500	75.0	R309
FCXR551000	100k0	R310
FCXR517500	75.0	R311
FCXR551000	100k0	R312
FCXR517500	75.0	R313
FCXR551000	100k0	R314
FCXR517500	75.0	R315
FCXR551000	100k0	R316
FCXR551000	100k0	R317
FCXR551000	100k0	R318
FCXR551000	100k0	R319
FCXR551000	100k0	R320
FCXR551000	100k0	R321
FCXR551000	100k0	R322
FCXR551000	100k0	R323
FCXR551000	100k0	R324
FCXR533160	3k16	R325
FCXR541000	10k0	R326
FCXR533160	3k16	R327
FCXR541000	10k0	R328

Code	Description	Reference
FCXR533160	3k16	R329
FCXR541000	10k0	R330
FCXR533160	3k16	R331
FCXR541000	10k0	R332
FCXR541330	13k3	R333
FCXR541330	13k3	R334
FCXR541330	13k3	R335
FCXR541330	13k3	R336
FCXR543160	31k6	R337
FCXR543160	31k6	R338
FCXR543160	31k6	R339
FCXR543160	31k6	R340
FCXR541470	14k7	R341
FCXR541470	14k7	R342
FCXR541470	14k7	R343
FCXR541470	14k7	R344
FCPR217031	50kBx2cc	R345
FCXR543830	38k3	R346
FCPR217031	50kBx2cc	R347
FCXR543830	38k3	R348
FCPR217031	50kBx2cc	R349
FCXR543830	38k3	R350
FCPR217031	50kBx2cc	R351
FCXR543830	38k3	R352
FCXR533160	3k16	R353
FCXR531000	1k0	R354
FCXR533160	3k16	R355
FCXR531000	1k0	R356
FCXR533160	3k16	R357
FCXR531000	1k0	R358
FCXR533160	3k16	R359
FCXR531000	1k0	R360
FCXR532370	2k37	R361
FCXR532370	2k37	R362
FCXR532370	2k37	R363
FCXR532370	2k37	R364
FCXR554640	464k	R365
FCXR554640	464k	R366
FCXR554640	464k	R367
FCXR554640	464k	R368
FCXR541000	10k0	R369
FCXR541000	10k0	R370
FCXR541000	10k0	R371
FCXR541000	10k0	R372
FCXR542610	26k1	R373
FCXR542610	26k1	R374
FCXR542610	26k1	R375
FCXR542610	26k1	R376
FCPR217031	50kBx2cc	R377
FCPR217031	50kBx2cc	R378
FCXR532370	2k37	R379
FCXR554640	464k	R380
FCXR532370	2k37	R381
FCXR554640	464k	R382
FCXR532370	2k37	R383
FCXR554640	464k	R384

Code	Description	Reference
FCXR532370	2k37	R385
FCXR554640	464k	R386
FCXR543160	31k6	R387
FCXR543160	31k6	R388
FCXR543160	31k6	R389
FCXR543160	31k6	R390
FCPR210051	10kAx2	R391
FCPR210051	10kAx2	R392
FCXR551000	100k0	R393
FCXR533160	3k16	R394
FCXR551000	100k0	R395
FCXR543160	31k6	R396
FCXR543160	31k6	R397
FCXR543160	31k6	R398
FCXR543160	31k6	R399
FCXR543160	31k6	R400
FCXR543160	31k6	R401
FCXR543160	31k6	R402
FCXR543160	31k6	R403
FCXR533160	3k16	R404
FCXR533160	3k16	R405
FCXR551000	100k0	R406
FCXR551000	100k0	R407
FCXR521000	100.0	R408
FCXR521000	100.0	R409
FCXR551000	100k0	R410
FCXR551000	100k0	R411
FCXR551000	100k0	R412
FCXR551000	100k0	R413
FCXR538250	8k25	R414
FCXR538250	8k25	R415
FCXR551000	100k0	R416
FCXR551000	100k0	R417
FCXR538250	8k25	R418
FCXR538250	8k25	R419
FCXR551000	100k0	R420
FCXR551000	100k0	R421
FCXR541780	17k8	R422
FCXR541780	17k8	R423
FCXR551000	100k0	R424
FCXR551000	100k0	R425
FCXR551000	100k0	R426
FCXR551000	100k0	R427
FCXR551000	100k0	R428
FCXR551000	100k0	R429
FCXR551000	100k0	R430
FCXR551000	100k0	R431
FCXR551000	100k0	R432
FCXR551000	100k0	R433
FCXR551000	100k0	R434
FCXR551000	100k0	R435
FCXR535620	5k62	R436
FCXR554640	464k	R437
FCXR535620	5k62	R438
FCXR554640	464k	R439
FCPR217031	50kBx2cc	R440

Code	Description	Reference
FCXR535620	5k62	R441
FCXR554640	464k	R442
FCXR535620	5k62	R443
FCXR554640	464k	R444
FCXR535620	5k62	R445
FCXR554640	464k	R446
FCXR535620	5k62	R447
FCXR554640	464k	R448
FCPR217031	50kBx2cc	R449
FCXR535620	5k62	R450
FCXR554640	464k	R451
FCXR535620	5k62	R452
FCXR554640	464k	R453
FCXR551000	100k0	R454
FCXR551000	100k0	R455
FCXR552370	237k	R456
FCXR552370	237k	R457
FCXR551620	162k	R458
FCXR551620	162k	R459
FCXR553480	348k	R460
FCXR552370	237k	R461
FCXR553480	348k	R462
FCXR552370	237k	R463
FCXR533160	3k16	R464
FCXR541000	10k0	R465
FCXR533160	3k16	R466
FCXR541000	10k0	R467
FCXR553480	348k	R468
FCXR552370	237k	R469
FCXR553480	348k	R470
FCXR552370	237k	R471
FCXR541330	13k3	R472
FCXR541330	13k3	R473
FCXR543160	31k6	R474
FCXR543160	31k6	R475
FCXR541470	14k7	R476
FCXR541470	14k7	R477
FCXR552370	237k	R478
FCXR553480	348k	R479
FCXR552370	237k	R480
FCXR553480	348k	R481
FCPR217031	50kBx2cc	R482
FCXR543830	38k3	R483
FCPR217031	50kBx2cc	R484
FCXR543830	38k3	R485
FCXR552370	237k	R486
FCXR552370	237k	R487
FCXR533160	3k16	R488
FCXR531000	1k0	R489
FCXR533160	3k16	R490
FCXR531000	1k0	R491
FCXR532370	2k37	R492
FCXR532370	2k37	R493
FCXR554640	464k	R494
FCXR554640	464k	R495
FCXR541000	10k0	R496

Code	Description	Reference
FCXR541000	10k0	R497
FCXR542610	26k1	R498
FCXR542610	26k1	R499
FCPR217031	50kBx2cc	R500
FCPR217031	50kBx2cc	R501
FCPR217031	50kBx2cc	R502
FCPR217031	50kBx2cc	R503
FCXR542150	21k5	R504
FCXR542150	21k5	R505
FCXR542150	21k5	R506
FCXR542150	21k5	R507
FCXR542150	21k5	R508
FCXR542150	21k5	R509
FCXR532370	2k37	R510
FCXR554640	464k	R511
FCXR532370	2k37	R512
FCXR554640	464k	R513
FCXR546810	68k1	R514
FCXR546810	68k1	R515
FCXR543160	31k6	R516
FCXR543160	31k6	R517
FCXR543160	31k6	R518
FCXR543160	31k6	R519
FCPR210051	10kAx2	R520
FCXR551000	100k0	R521
FCXR543160	31k6	R522
FCXR543160	31k6	R523
FCPR210051	10kAx2	R524
FCXR551000	100k0	R525
FCXR543160	31k6	R526
FCXR543160	31k6	R527
FCXR543160	31k6	R528
FCXR543160	31k6	R529
FCXR543160	31k6	R530
FCXR543160	31k6	R531
FCXR533160	3k16	R532
FCXR533160	3k16	R533
FCXR551000	100k0	R534
FCXR551000	100k0	R535
FCXR551000	100k0	R536
FCXR551000	100k0	R537
FCXR521000	100.0	R538
FCXR521000	100.0	R539
FCXR521000	100.0	R540
FCXR521000	100.0	R541
FCXR551000	100k0	R542
FCXR551000	100k0	R543
FCXR551000	100k0	R544
FCXR551000	100k0	R545
FCXR538250	8k25	R546
FCXR538250	8k25	R547
FCXR538250	8k25	R548
FCXR538250	8k25	R549
FCXR551000	100k0	R550
FCXR551000	100k0	R551
FCXR551000	100k0	R552

Code	Description	Reference
FCXR551000	100k0	R553
FCXR551000	100k0	R554
FCXR551000	100k0	R555
FCXR551000	100k0	R556
FCXR551000	100k0	R557
FCXR551000	100k0	R558
FCXR551000	100k0	R559
FCXR551000	100k0	R560
FCXR551000	100k0	R561
FCXR551000	100k0	R562
FCXR551000	100k0	R563
FCXR551000	100k0	R564
FCXR551000	100k0	R565
FCXR535620	5k62	R566
FCXR554640	464k	R567
FCXR535620	5k62	R568
FCXR554640	464k	R569
FCXR535620	5k62	R570
FCXR554640	464k	R571
FCXR535620	5k62	R572
FCXR554640	464k	R573
FCPR217031	50kBx2cc	R574
FCPR217031	50kBx2cc	R575
FCXR535620	5k62	R576
FCXR554640	464k	R577
FCXR535620	5k62	R578
FCXR554640	464k	R579
FCXR535620	5k62	R580
FCXR554640	464k	R581
FCXR535620	5k62	R582
FCXR554640	464k	R583
FCXR551000	100k0	R584
FCXR551000	100k0	R585
FCXR551000	100k0	R586
FCXR551000	100k0	R587
FCXR552370	237k	R588
FCXR552370	237k	R589
FCXR552370	237k	R590
FCXR552370	237k	R591
FCXR551620	162k	R592
FCXR551620	162k	R593
FCXR551620	162k	R594
FCXR551620	162k	R595
FCXR553480	348k	R596
FCXR552370	237k	R597
FCXR553480	348k	R598
FCXR552370	237k	R599
FCXR553480	348k	R600
FCXR552370	237k	R601
FCXR553480	348k	R602
FCXR552370	237k	R603
FCXR553480	348k	R604
FCXR552370	237k	R605
FCXR553480	348k	R606
FCXR552370	237k	R607
FCXR553480	348k	R608

Code	Description	Reference
FCXR552370	237k	R609
FCXR553480	348k	R610
FCXR552370	237k	R611
FCXR552370	237k	R612
FCXR553480	348k	R613
FCXR552370	237k	R614
FCXR553480	348k	R615
FCXR552370	237k	R616
FCXR553480	348k	R617
FCXR552370	237k	R618
FCXR553480	348k	R619
FCXR552370	237k	R620
FCXR552370	237k	R621
FCXR552370	237k	R622
FCXR552370	237k	R623
FCPR217031	50kBx2cc	R624
FCPR217031	50kBx2cc	R625
FCPR217031	50kBx2cc	R626
FCPR217031	50kBx2cc	R627
FCPR217031	50kBx2cc	R628
FCPR217031	50kBx2cc	R629
FCXR542150	21k5	R630
FCXR542150	21k5	R631
FCXR542150	21k5	R632
FCXR542150	21k5	R633
FCXR542150	21k5	R634
FCXR542150	21k5	R635
FCXR542150	21k5	R636
FCXR542150	21k5	R637
FCXR542150	21k5	R638
FCXR542150	21k5	R639
FCXR542150	21k5	R640
FCXR542150	21k5	R641
FCXR546810	68k1	R642
FCXR546810	68k1	R643
FCXR546810	68k1	R644
FCXR546810	68k1	R645
FCXR543160	31k6	R646
FCXR543160	31k6	R647
FCXR543160	31k6	R648
FCXR543160	31k6	R649
FCPR210051	10kAx2	R650
FCPR210051	10kAx2	R651
FCXR551000	100k0	R652
FCXR533160	3k16	R653
FCXR551000	100k0	R654
FCXR543160	31k6	R655
FCXR543160	31k6	R656
FCXR543160	31k6	R657
FCXR543160	31k6	R658
FCXR543160	31k6	R659
FCXR543160	31k6	R660
FCXR543160	31k6	R661
FCXR543160	31k6	R662
FCXR533160	3k16	R663
FCXR533160	3k16	R664

PARTS LIST: PRINTED CIRCUIT 11.0878.05.00

Code	Description	Reference
FCXR551000	100k0	R665
FCXR551000	100k0	R666
FCXR551000	100k0	R667
FCXR551000	100k0	R668
FCINTAP079	LS001-A23BA	S101
FCINTAP079	LS001-A23BA	S102
FCINTAP015	17.010/CE	S103
FCINTAP015	17.010/CE	S104
FCINTAP015	17.010/CE	S105
FCINTAP015	17.010/CE	S106
FCINTAP015	17.010/CE	S107
FCINTAP015	17.010/CE	S108
FCINTAP079	LS001-A23BA	S109
FCINTAP079	LS001-A23BA	S110
FCINTAP015	17.010/CE	S111
FCINTAP015	17.010/CE	S112
FCINTAP015	17.010/CE	S113
FCINTAP015	17.010/CE	S114
FCINTAP015	17.010/CE	S115
FCINTAP015	17.010/CE	S116
FCINTAP077	LS001-A42BAK	S117
FCINTAP077	LS001-A42BAK	S118
FCINTAP015	17.010/CE	S119
FCINTAP015	17.010/CE	S120
FCINTAP015	17.010/CE	S121
FCINTAP015	17.010/CE	S122
FCINTAP015	17.010/CE	S123
FCINTAP015	17.010/CE	S124
FCINTAP077	LS001-A42BAK	S125
FCINTAP077	LS001-A42BAK	S126
FCINTAP015	17.010/CE	S127
FCINTAP015	17.010/CE	S128
FCINTAP015	17.010/CE	S129
FCINTAP015	17.010/CE	S130
FCINTAP015	17.010/CE	S131
FCINTAP015	17.010/CE	S132
FCSEPCI010	Spacer M3x16	SP100
FCSEPCI010	Spacer M3x16	SP101
FCSEPCI010	Spacer M3x16	SP102
FCSEPCI010	Spacer M3x16	SP103
FCSEPCI010	Spacer M3x16	SP104
FCSEPCI010	Spacer M3x16	SP105
FCSEPCI010	Spacer M3x16	SP106
FCSEPCI010	Spacer M3x16	SP107
FCSEPCI010	Spacer M3x16	SP108
FCSEPCI010	Spacer M3x16	SP109
FCSEPCI010	Spacer M3x16	SP110
FCSEPCI010	Spacer M3x16	SP111
FC4R002100	1002.01.00	WI101
FC4R002100	1002.01.00	WI102
FC4J006060	1006.00.60	WI103
FC4R002100	1002.01.00	WI104
FC4R002100	1002.01.00	WI105
FC4N049060	1049.00.60	WI106
FC4M009100	1009.01.00	WI107
FC4M009100	1009.01.00	WI108

PARTS LIST: PRINTED CIRCUIT 11.0878.05.00

Code	Description	Reference
FC4K007150	1007.01.50	WI109
FC4M009100	1009.01.00	WI110
FC4M009100	1009.01.00	WI111
FC0B095100	1095.01.00	WI112
FC4N049060	1049.00.60	WI113
FC4K007150	1007.01.50	WI114
FC4K007150	1007.01.50	WI115
FC4K007150	1007.01.50	WI116
FC4K007150	1007.01.50	WI117
FC4K007150	1007.01.50	WI118
FC4K007150	1007.01.50	WI119
FC4K007150	1007.01.50	WI120

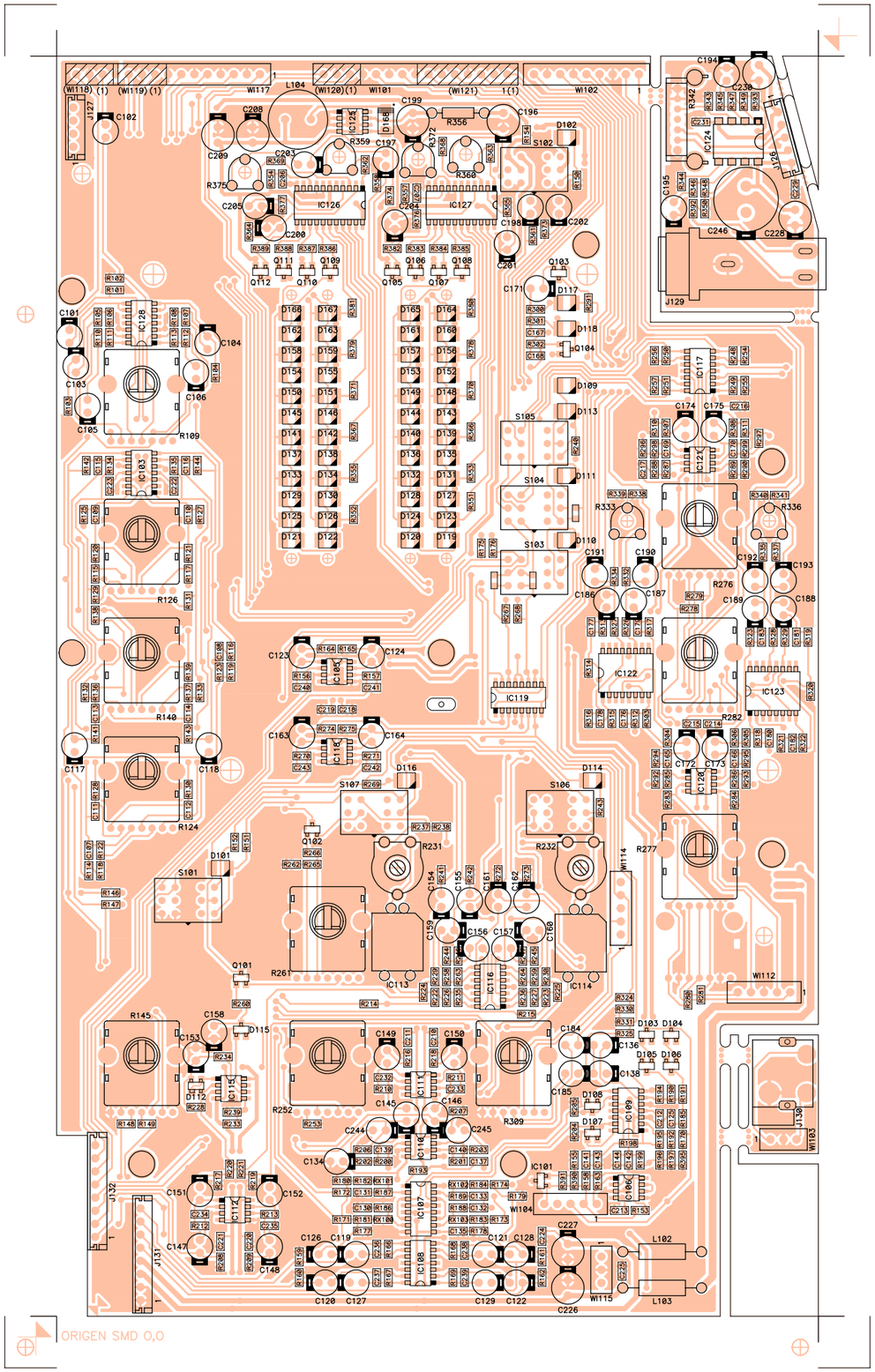

	related to: circuit no: 11.0890-05.00 schema no: 10.0597-01.04 insertion file no: 81.0063-01.03	side: Component	
		view: Reference	
	project n:	title: Outputs Ct.	
number: 33.0682	version: 01.03	product n:	
drawn by: M. Amoros	date: 011105	approved:	

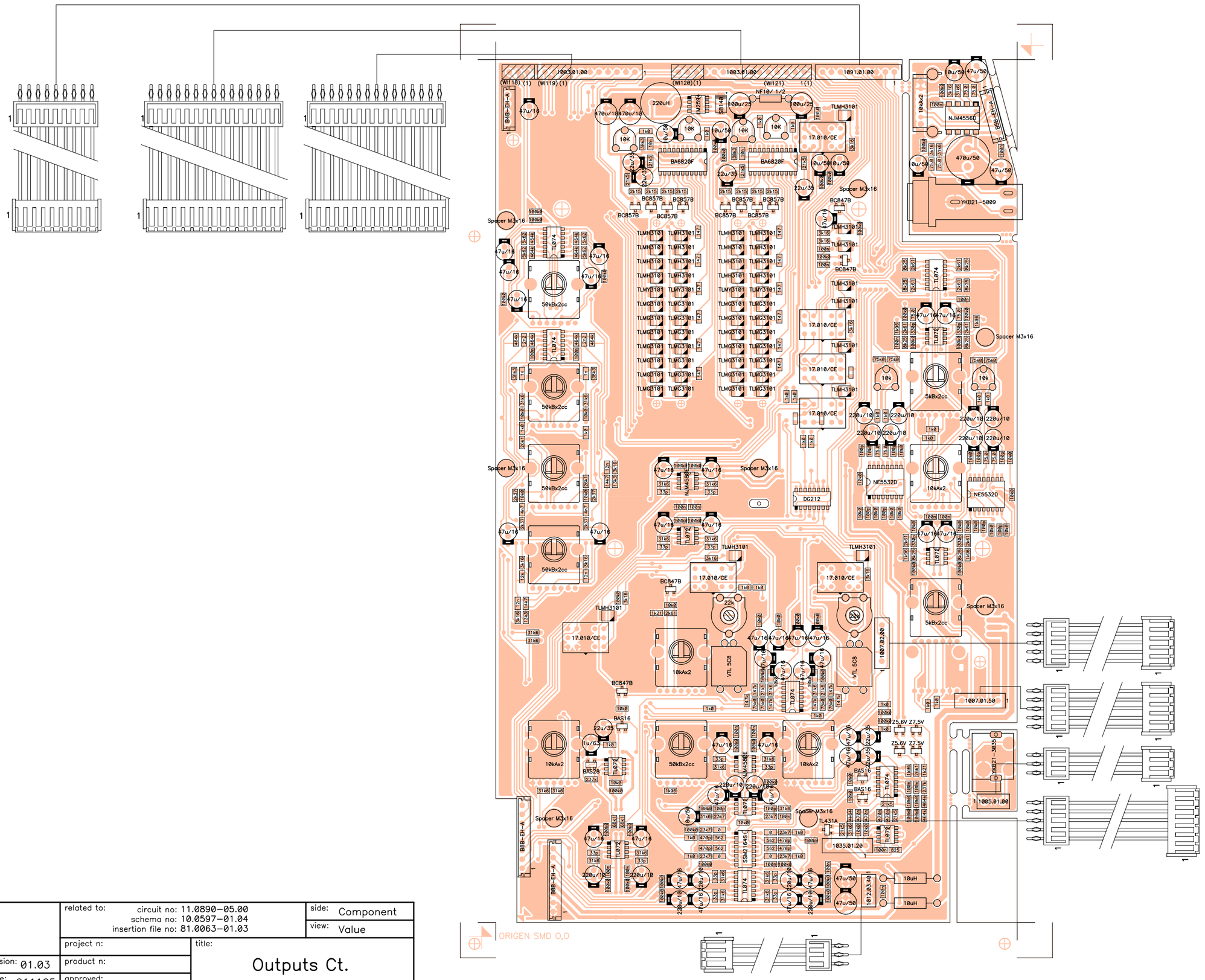

	related to: circuit no: 11.0890-05.00 schema no: 10.0597-01.04 insertion file no: 81.0063-01.03	side: Component	
		view: Value	
	project n:	title: Outputs Ct.	
number: 33.0683	version: 01.03	product n:	
drawn by: M. Amoros	date: 011105	approved:	

PARTS LIST: PRINTED CIRCUIT 11.0890.05.00

Code	Description	Reference
FCCE100000	47u/16	C101
FCCE100000	47u/16	C102
FCCE100000	47u/16	C103
FCCE100000	47u/16	C104
FCCE100000	47u/16	C105
FCCE100000	47u/16	C106
FCXCD40120	12n	C107
FCXCD40120	12n	C108
FCXCD40010	1n	C109
FCXCD40010	1n	C110
FCXCD40120	12n	C111
FCXCD40120	12n	C112
FCXCD40047	4n7	C113
FCXCD40047	4n7	C114
FCXCD40022	2n2	C115
FCXCD40022	2n2	C116
FCCE100000	47u/16	C117
FCCE100000	47u/16	C118
FCCE050000	220u/10	C119
FCCE050000	220u/10	C120
FCCE050000	220u/10	C121
FCCE050000	220u/10	C122
FCCE100000	47u/16	C123
FCCE100000	47u/16	C124
FCXCD41000	100n	C125
FCCE100000	47u/16	C126
FCCE100000	47u/16	C127
FCCE100000	47u/16	C128
FCCE100000	47u/16	C129
FCXCD24700	470p	C130
FCXCD24700	470p	C131
FCXCD24700	470p	C132
FCXCD24700	470p	C133
FCCE250100	10u/50	C134
FCXCD41000	100n	C135
FCCE200220	22u/35	C136
FCXCD41000	100n	C137
FCCE200220	22u/35	C138
FCXCD21000	100p	C139
FCXCD21000	100p	C140
FCXCD44700	470n	C141
FCXCD44700	470n	C142
FCXCD44700	470n	C143
FCXCD44700	470n	C144
FCCE050000	220u/10	C145
FCCE050000	220u/10	C146
FCCE050000	220u/10	C147
FCCE050000	220u/10	C148
FCCE100000	47u/16	C149
FCCE100000	47u/16	C150
FCCE100000	47u/16	C151
FCCE100000	47u/16	C152
FCCE300010	1u/63	C153
FCCE100000	47u/16	C154
FCCE100000	47u/16	C155
FCCE100000	47u/16	C156

PARTS LIST: PRINTED CIRCUIT 11.0890.05.00

Code	Description	Reference
FCCE100000	47u/16	C157
FCCE200220	22u/35	C158
FCCE100000	47u/16	C159
FCCE100000	47u/16	C160
FCCE100000	47u/16	C161
FCCE100000	47u/16	C162
FCCE100000	47u/16	C163
FCCE100000	47u/16	C164
FCXCD23300	330p	C165
FCXCD23300	330p	C166
FCXCD41000	100n	C167
FCXCD41000	100n	C168
FCXCD23300	330p	C169
FCXCD23300	330p	C170
FCCE100000	47u/16	C171
FCCE100000	47u/16	C172
FCCE100000	47u/16	C173
FCCE100000	47u/16	C174
FCCE100000	47u/16	C175
FCXCD21000	100p	C176
FCXCD21000	100p	C177
FCXCD21000	100p	C178
FCXCD21000	100p	C179
FCXCD21000	100p	C180
FCXCD21000	100p	C181
FCXCD21000	100p	C182
FCXCD21000	100p	C183
FCCE100000	47u/16	C184
FCCE100000	47u/16	C185
FCCE050000	220u/10	C186
FCCE050000	220u/10	C187
FCCE050000	220u/10	C188
FCCE050000	220u/10	C189
FCCE050000	220u/10	C190
FCCE050000	220u/10	C191
FCCE050000	220u/10	C192
FCCE050000	220u/10	C193
FCCE250100	10u/50	C194
FCCE250100	10u/50	C195
FCCE151000	100u/25	C196
FCCE250100	10u/50	C197
FCCE250100	10u/50	C198
FCCE151000	100u/25	C199
FCCE200220	22u/35	C200
FCCE200220	22u/35	C201
FCCE250100	10u/50	C202
FCCE250100	10u/50	C203
FCCE200220	22u/35	C204
FCCE200220	22u/35	C205
FCXCD40100	10n	C206
FCXCD40100	10n	C207
FCCE030000	470u/10	C208
FCCE030000	470u/10	C209
FCXCD41000	100n	C210
FCXCD41000	100n	C211
FCXCD41000	100n	C212

PARTS LIST: PRINTED CIRCUIT 11.0890.05.00

Code	Description	Reference
FCXCD41000	100n	C213
FCXCD41000	100n	C214
FCXCD41000	100n	C215
FCXCD41000	100n	C216
FCXCD41000	100n	C217
FCXCD41000	100n	C218
FCXCD41000	100n	C219
FCXCD41000	100n	C220
FCXCD41000	100n	C221
FCXCD41000	100n	C222
FCXCD41000	100n	C223
FCXCD41000	100n	C224
FCXCD41000	100n	C225
FCCE250470	47u/50	C226
FCCE250470	47u/50	C227
FCCE250470	47u/50	C228
FCXCD41000	100n	C229
FCCE250470	47u/50	C230
FCXCD41000	100n	C231
FCXCD13300	33p	C232
FCXCD13300	33p	C233
FCXCD13300	33p	C234
FCXCD13300	33p	C235
FCXCD13300	33p	C236
FCXCD13300	33p	C237
FCXCD13300	33p	C238
FCXCD13300	33p	C239
FCXCD13300	33p	C240
FCXCD13300	33p	C241
FCXCD13300	33p	C242
FCXCD13300	33p	C243
FCCE100000	47u/16	C244
FCCE100000	47u/16	C245
FCCE254700	470u/50	C246
FCCIM08900	Printed Board 11.0890	CI101
FCLEDSMD20	TLMH3101	D101
FCLEDSMD20	TLMH3101	D102
FCXZ000056	Z5.6V	D103
FCXZ000075	Z7.5V	D104
FCXZ000056	Z5.6V	D105
FCXZ000075	Z7.5V	D106
FCXDDBAS16	BAS16	D107
FCXDDBAS16	BAS16	D108
FCLEDSMD20	TLMH3101	D109
FCLEDSMD20	TLMH3101	D110
FCLEDSMD20	TLMH3101	D111
FCXDDBAS28	BAS28	D112
FCLEDSMD20	TLMH3101	D113
FCLEDSMD20	TLMH3101	D114
FCXDDBAS16	BAS16	D115
FCLEDSMD20	TLMH3101	D116
FCLEDSMD20	TLMH3101	D117
FCLEDSMD20	TLMH3101	D118
FCLEDSMD30	TLMG3101	D119
FCLEDSMD30	TLMG3101	D120
FCLEDSMD30	TLMG3101	D121

PARTS LIST: PRINTED CIRCUIT 11.0890.05.00

Code	Description	Reference
FCLEDSMD30	TLMG3101	D122
FCLEDSMD30	TLMG3101	D123
FCLEDSMD30	TLMG3101	D124
FCLEDSMD30	TLMG3101	D125
FCLEDSMD30	TLMG3101	D126
FCLEDSMD30	TLMG3101	D127
FCLEDSMD30	TLMG3101	D128
FCLEDSMD30	TLMG3101	D129
FCLEDSMD30	TLMG3101	D130
FCLEDSMD30	TLMG3101	D131
FCLEDSMD30	TLMG3101	D132
FCLEDSMD30	TLMG3101	D133
FCLEDSMD30	TLMG3101	D134
FCLEDSMD30	TLMG3101	D135
FCLEDSMD30	TLMG3101	D136
FCLEDSMD30	TLMG3101	D137
FCLEDSMD30	TLMG3101	D138
FCLEDSMD30	TLMG3101	D139
FCLEDSMD30	TLMG3101	D140
FCLEDSMD30	TLMG3101	D141
FCLEDSMD30	TLMG3101	D142
FCLEDSMD30	TLMG3101	D143
FCLEDSMD30	TLMG3101	D144
FCLEDSMD30	TLMG3101	D145
FCLEDSMD30	TLMG3101	D146
FCLEDSMD25	TLMY3101	D148
FCLEDSMD25	TLMY3101	D149
FCLEDSMD25	TLMY3101	D150
FCLEDSMD25	TLMY3101	D151
FCLEDSMD20	TLMH3101	D152
FCLEDSMD20	TLMH3101	D153
FCLEDSMD20	TLMH3101	D154
FCLEDSMD20	TLMH3101	D155
FCLEDSMD20	TLMH3101	D156
FCLEDSMD20	TLMH3101	D157
FCLEDSMD20	TLMH3101	D158
FCLEDSMD20	TLMH3101	D159
FCLEDSMD20	TLMH3101	D160
FCLEDSMD20	TLMH3101	D161
FCLEDSMD20	TLMH3101	D162
FCLEDSMD20	TLMH3101	D163
FCLEDSMD20	TLMH3101	D164
FCLEDSMD20	TLMH3101	D165
FCLEDSMD20	TLMH3101	D166
FCLEDSMD20	TLMH3101	D167
FCXDDSB140	SB140	D168
FCIC431010	TL431A	IC101
FCIC074010	TL074	IC103
FCIC4580E0	NJM4580E	IC105
FCIC072010	TL072	IC106
FCIC074010	TL074	IC107
FCIC216410	SSM2164S	IC108
FCIC074010	TL074	IC109
FCIC072010	TL072	IC110
FCIC4580E0	NJM4580E	IC111
FCIC072010	TL072	IC112

PARTS LIST: PRINTED CIRCUIT 11.0890.05.00

Code	Description	Reference
FCOPTVTL50	VTL 5C8	IC113
FCOPTVTL50	VTL 5C8	IC114
FCIC072010	TL072	IC115
FCIC074010	TL074	IC116
FCIC074010	TL074	IC117
FCIC072010	TL072	IC118
FCIC212010	DG212	IC119
FCIC072010	TL072	IC120
FCIC072010	TL072	IC121
FCIC553210	NE5532D	IC122
FCIC553210	NE5532D	IC123
FCIC455600	NJM4556D	IC124
FCIC259410	LM2594	IC125
FCIC682000	BA6820F	IC126
FCIC682000	BA6820F	IC127
FCIC074010	TL074	IC128
FCCTM00050	B5B-EH-A	J126
FCCTM00040	B4B-EH-A	J127
FCBASJ0200	YKB21-5009	J129
FCBASR0600	YKB21-3035	J130
FCCTM00080	B8B-EH-A	J131
FCCTM00080	B8B-EH-A	J132
FCCHK00100	10uH	L102
FCCHK00100	10uH	L103
FCIND00400	220uH	L104
FCXTT08470	BC847B	Q101
FCXTT08470	BC847B	Q102
FCXTT08470	BC847B	Q103
FCXTT08470	BC847B	Q104
FCXTT08570	BC857B	Q105
FCXTT08570	BC857B	Q106
FCXTT08570	BC857B	Q107
FCXTT08570	BC857B	Q108
FCXTT08570	BC857B	Q109
FCXTT08570	BC857B	Q110
FCXTT08570	BC857B	Q111
FCXTT08570	BC857B	Q112
FCXR551000	100k0	R101
FCXR551000	100k0	R102
FCXR551000	100k0	R103
FCXR551000	100k0	R104
FCXR535620	5k62	R105
FCXR554640	464k	R106
FCXR535620	5k62	R107
FCXR554640	464k	R108
FCPR217031	50kBx2cc	R109
FCXR535620	5k62	R110
FCXR554640	464k	R111
FCXR535620	5k62	R112
FCXR554640	464k	R113
FCXR533160	3k16	R114
FCXR541000	10k0	R115
FCXR533160	3k16	R116
FCXR541000	10k0	R117
FCXR541330	13k3	R118
FCXR541330	13k3	R119

PARTS LIST: PRINTED CIRCUIT 11.0890.05.00

Code	Description	Reference
FCXR543160	31k6	R120
FCXR543160	31k6	R121
FCXR541470	14k7	R122
FCXR541470	14k7	R123
FCPR217031	50kBx2cc	R124
FCXR543830	38k3	R125
FCPR217031	50kBx2cc	R126
FCXR543830	38k3	R127
FCXR533160	3k16	R128
FCXR531000	1k0	R129
FCXR533160	3k16	R130
FCXR531000	1k0	R131
FCXR532370	2k37	R132
FCXR532370	2k37	R133
FCXR554640	464k	R134
FCXR554640	464k	R135
FCXR541000	10k0	R136
FCXR541000	10k0	R137
FCXR542610	26k1	R138
FCXR542610	26k1	R139
FCPR217031	50kBx2cc	R140
FCXR532370	2k37	R141
FCXR554640	464k	R142
FCXR532370	2k37	R143
FCXR554640	464k	R144
FCPR210051	10kAx2	R145
FCXR543160	31k6	R146
FCXR543160	31k6	R147
FCXR543160	31k6	R148
FCXR543160	31k6	R149
FCXR533160	3k16	R150
FCXR533160	3k16	R151
FCXR551000	100k0	R152
FCXR528250	825	R153
FCXR521000	100.0	R154
FCXR534640	4k64	R155
FCXR543160	31k6	R156
FCXR543160	31k6	R157
FCXR541000	10k0	R158
FCXR551000	100k0	R159
FCXR551000	100k0	R160
FCXR551000	100k0	R161
FCXR551000	100k0	R162
FCXR541000	10k0	R163
FCXR551000	100k0	R164
FCXR551000	100k0	R165
FCXR543160	31k6	R166
FCXR543160	31k6	R167
FCXR543160	31k6	R168
FCXR543160	31k6	R169
FCXR554640	464k	R170
FCXR531000	1k0	R171
FCXR531000	1k0	R172
FCXR531000	1k0	R173
FCXR531000	1k0	R174
FCXR531000	1k0	R175

PARTS LIST: PRINTED CIRCUIT 11.0890.05.00

Code	Description	Reference
FCXR531000	1k0	R176
FCXR551000	100k0	R177
FCXR551000	100k0	R178
FCXR551000	100k0	R179
FCXR551000	100k0	R180
FCXR542370	23k7	R181
FCXR542370	23k7	R182
FCXR542370	23k7	R183
FCXR542370	23k7	R184
FCXR552370	237k	R185
FCXR525620	562	R186
FCXR525620	562	R187
FCXR525620	562	R188
FCXR525620	562	R189
FCXR542610	26k1	R190
FCXR531210	1k21	R191
FCXR541000	10k0	R192
FCXR541000	10k0	R193
FCXR531960	1k96	R194
FCXR541000	10k0	R195
FCXR551000	100k0	R196
FCXR551000	100k0	R197
FCXR542150	21k5	R198
FCXR542150	21k5	R199
FCXR542370	23k7	R200
FCXR542370	23k7	R201
FCXR543160	31k6	R202
FCXR543160	31k6	R203
FCXR541000	10k0	R204
FCXR541000	10k0	R205
FCXR551000	100k0	R206
FCXR551000	100k0	R207
FCXR551000	100k0	R208
FCXR551000	100k0	R209
FCXR543160	31k6	R210
FCXR543160	31k6	R211
FCXR543160	31k6	R212
FCXR543160	31k6	R213
FCXR531000	1k0	R214
FCXR531000	1k0	R215
FCXR551000	100k0	R216
FCXR551000	100k0	R217
FCXR551000	100k0	R218
FCXR551000	100k0	R219
FCXR546810	68k1	R220
FCXR546810	68k1	R221
FCXR547500	75k0	R222
FCXR547500	75k0	R223
FCXR551470	147k	R224
FCXR551470	147k	R225
FCXR547500	75k0	R226
FCXR547500	75k0	R227
FCXR552370	237k	R228
FCXR551470	147k	R229
FCXR551470	147k	R230
FCRJF52200	22k	R231

PARTS LIST: PRINTED CIRCUIT 11.0890.05.00

Code	Description	Reference
FCRJF52200	22k	R232
FCXR551000	100k0	R233
FCXR531000	1k0	R234
FCXR551470	147k	R235
FCXR551470	147k	R236
FCXR531000	1k0	R237
FCXR531000	1k0	R238
FCXR541000	10k0	R239
FCXR533160	3k16	R240
FCXR541000	10k0	R241
FCXR541000	10k0	R242
FCXR533160	3k16	R243
FCXR551000	100k0	R244
FCXR551000	100k0	R245
FCXR541000	10k0	R246
FCXR541000	10k0	R247
FCXR532610	2k61	R248
FCXR532610	2k61	R249
FCXR532610	2k61	R250
FCXR532610	2k61	R251
FCPR217031	50kBx2cc	R252
FCXR531960	1k96	R253
FCXR538250	8k25	R254
FCXR538250	8k25	R255
FCXR538250	8k25	R256
FCXR538250	8k25	R257
FCXR542150	21k5	R258
FCXR542150	21k5	R259
FCXR541000	10k0	R260
FCPR210051	10kAx2	R261
FCXR531210	1k21	R262
FCXR543160	31k6	R263
FCXR543160	31k6	R264
FCXR532610	2k61	R265
FCXR541000	10k0	R266
FCXR531000	1k0	R267
FCXR531000	1k0	R268
FCXR533160	3k16	R269
FCXR543160	31k6	R270
FCXR543160	31k6	R271
FCXR551000	100k0	R272
FCXR551000	100k0	R273
FCXR551000	100k0	R274
FCXR551000	100k0	R275
FCPR202031	5kBx2cc	R276
FCPR202031	5kBx2cc	R277
FCXR531000	1k0	R278
FCXR531000	1k0	R279
FCXR531000	1k0	R280
FCXR531000	1k0	R281
FCPR210051	10kAx2	R282
FCXR551000	100k0	R283
FCXR551000	100k0	R284
FCXR538250	8k25	R285
FCXR538250	8k25	R286
FCXR551000	100k0	R287

PARTS LIST: PRINTED CIRCUIT 11.0890.05.00

Code	Description	Reference
FCXR538250	8k25	R288
FCXR551000	100k0	R289
FCXR538250	8k25	R290
FCXR551000	100k0	R291
FCXR531960	1k96	R292
FCXR531960	1k96	R293
FCXR532610	2k61	R294
FCXR532610	2k61	R295
FCXR531960	1k96	R296
FCXR531960	1k96	R297
FCXR532610	2k61	R298
FCXR532610	2k61	R299
FCXR533160	3k16	R300
FCXR533160	3k16	R301
FCXR551000	100k0	R302
FCXR541000	10k0	R303
FCXR541000	10k0	R304
FCXR541000	10k0	R305
FCXR541000	10k0	R306
FCXR517500	75.0	R307
FCXR517500	75.0	R308
FCPR210051	10kAx2	R309
FCXR551000	100k0	R310
FCXR551000	100k0	R311
FCXR541000	10k0	R312
FCXR541000	10k0	R313
FCXR541000	10k0	R314
FCXR541000	10k0	R315
FCXR541000	10k0	R316
FCXR541000	10k0	R317
FCXR541000	10k0	R318
FCXR541000	10k0	R319
FCXR541000	10k0	R320
FCXR541000	10k0	R321
FCXR541000	10k0	R322
FCXR541000	10k0	R323
FCXR531000	1k0	R324
FCXR531000	1k0	R325
FCXR517500	75.0	R326
FCXR517500	75.0	R327
FCXR517500	75.0	R328
FCXR517500	75.0	R329
FCXR551000	100k0	R330
FCXR551000	100k0	R331
FCXR531000	1k0	R332
FCRJC51000	10k	R333
FCXR531000	1k0	R334
FCXR531000	1k0	R335
FCRJC51000	10k	R336
FCXR531000	1k0	R337
FCXR547500	75k0	R338
FCXR547500	75k0	R339
FCXR547500	75k0	R340
FCXR547500	75k0	R341
FCPR210040	10kAx2	R342
FCXR551000	100k0	R343

PARTS LIST: PRINTED CIRCUIT 11.0890.05.00

Code	Description	Reference
FCXR551000	100k0	R344
FCXR533160	3k16	R345
FCXR533160	3k16	R346
FCXR543160	31k6	R347
FCXR543160	31k6	R348
FCXR517500	75.0	R349
FCXR517500	75.0	R350
FCXR521470	147	R351
FCXR521470	147	R352
FCXR521470	147	R353
FCXR543830	38k3	R354
FCXR521470	147	R355
FCRF221000	NF10/ 1/2	R356
FCXR543830	38k3	R357
FCXR551000	100k0	R358
FCRJC51000	10K	R359
FCRJC51000	10K	R360
FCXR551000	100k0	R361
FCXR531000	1k0	R362
FCXR531000	1k0	R363
FCXR542150	21k5	R364
FCXR542150	21k5	R365
FCXR521470	147	R366
FCXR521470	147	R367
FCXR531000	1k0	R368
FCXR531000	1k0	R369
FCXR521470	147	R370
FCXR521470	147	R371
FCRJC51000	10K	R372
FCXR551000	100k0	R373
FCXR551000	100k0	R374
FCRJC51000	10K	R375
FCXR542150	21k5	R376
FCXR542150	21k5	R377
FCXR521470	147	R378
FCXR521470	147	R379
FCXR521470	147	R380
FCXR521470	147	R381
FCXR532150	2k15	R382
FCXR532150	2k15	R383
FCXR532150	2k15	R384
FCXR532150	2k15	R385
FCXR532150	2k15	R386
FCXR532150	2k15	R387
FCXR532150	2k15	R388
FCXR532150	2k15	R389
FCXR543160	31k6	R390
FCXR542150	21k5	R391
FCXR517500	75.0	R392
FCXR517500	75.0	R393
FCXR554640	464k	R395
FCXR500000	0	RX100
FCXR500000	0	RX101
FCXR500000	0	RX102
FCXR500000	0	RX103
FCINTAP015	17.010/CE	S101

PARTS LIST: PRINTED CIRCUIT 11.0890.05.00

Code	Description	Reference
FCINTAP015	17.010/CE	S102
FCINTAP015	17.010/CE	S103
FCINTAP015	17.010/CE	S104
FCINTAP015	17.010/CE	S105
FCINTAP015	17.010/CE	S106
FCINTAP015	17.010/CE	S107
FCSEPCI010	Spacer M3x16	SP100
FCSEPCI010	Spacer M3x16	SP101
FCSEPCI010	Spacer M3x16	SP102
FCSEPCI010	Spacer M3x16	SP103
FCSEPCI010	Spacer M3x16	SP104
FCSEPCI010	Spacer M3x16	SP105
FCSEPCI010	Spacer M3x16	SP106
FCSEPCI010	Spacer M3x16	SP107
FC4U003100	1003.01.00	WI101
FC4O091100	1091.01.00	WI102
FC4I005100	1005.01.00	WI103
FC4K035120	1035.01.20	WI104
FC4K007150	1007.01.50	WI112
FC4K007200	1007.02.00	WI114
FC0C012340	1012.03.40	WI115
FC4U003100	1003.01.00	WI117

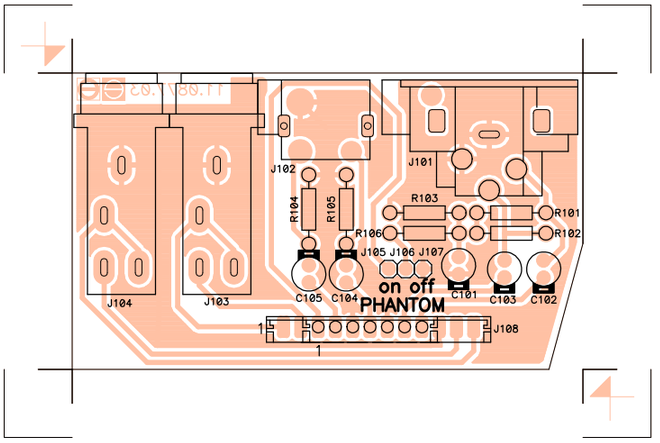

		related to: circuit no: 11.0877–03.00 schema no: 10.0562–01.02 insertion file no:	side: Component view: Reference	
		project n:	title: Input Mic–Line Ct.	
number: 33.0698	version: 01.01	product n:		
drawn by: M. Amoros	date: 011114	approved: Domingo Mele		

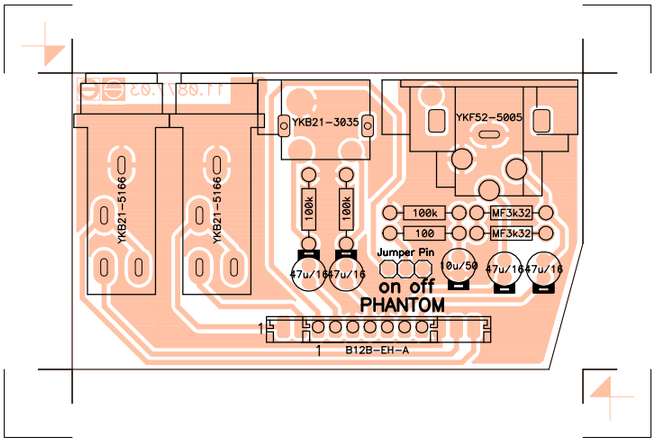

	related to: circuit no: 11.0877-03.00 schema no: 10.0562-01.02 insertion file no:	side: Component view: Value	
	project n:	title: Input Mic-Line Ct.	
number: 33.0699	version: 01.01	product n:	
drawn by: M. Amoros	date: 011114	approved: Domingo Mele	

PARTS LIST: 4 x PRINTED CIRCUIT 11.0877.03.00

Code	Description	Reference
FCCE250470	47u/50	C101
FCCE100000	47u/16	C102
FCCE100000	47u/16	C103
FCCE100000	47u/16	C104
FCCE100000	47u/16	C105
FCCIM08770	Printed Board 11.0877 (Micro-Line)	CI101
FCBASX0900	YKF52-5005	J101
FCBASR0600	YKB21-3035	J102
FCBASJ0100	YKB21-5166	J103
FCBASJ0100	YKB21-5166	J104
FCTERM0100	Jumper Pin	J105
FCTERM0100	Jumper Pin	J106
FCTERM0100	Jumper Pin	J107
FCCTM00120	B12B-EH-A	J108
FCMJ000100	Jumper	MJ101
FCRB043320	MF3k32	R101
FCRB043320	MF3k32	R102
FCRC061000	100k	R103
FCRC061000	100k	R104
FCRC061000	100k	R105
FCRC031000	100	R106
FCCE250100	10u/50	C101
FCCE100000	47u/16	C102
FCCE100000	47u/16	C103
FCCE100000	47u/16	C104
FCCE100000	47u/16	C105
FCCIM08770	Printed Board 11.0877 (Micro-Line)	CI101
FCBASX0900	YKF52-5005	J101
FCBASR0600	YKB21-3035	J102
FCBASJ0100	YKB21-5166	J103
FCBASJ0100	YKB21-5166	J104
FCTERM0100	Jumper Pin	J105
FCTERM0100	Jumper Pin	J106
FCTERM0100	Jumper Pin	J107
FCCTM00120	B12B-EH-A	J108
FCMJ000100	Jumper	MJ101
FCRB043320	MF3k32	R101
FCRB043320	MF3k32	R102
FCRC061000	100k	R103
FCRC061000	100k	R104
FCRC061000	100k	R105
FCRC031000	100	R106
FCCE250470	47u/50	C101
FCCE100000	47u/16	C102
FCCE100000	47u/16	C103
FCCE100000	47u/16	C104
FCCE100000	47u/16	C105
FCCIM08770	Printed Board 11.0877 (Micro-Line)	CI101
FCBASX0900	YKF52-5005	J101
FCBASR0600	YKB21-3035	J102
FCBASJ0100	YKB21-5166	J103
FCBASJ0100	YKB21-5166	J104
FCTERM0100	Jumper Pin	J105
FCTERM0100	Jumper Pin	J106
FCTERM0100	Jumper Pin	J107
FCCTM00120	B12B-EH-A	J108

PARTS LIST: 4 x PRINTED CIRCUIT 11.0877.03.00

Code	Description	Reference
FCMJ000100	Jumper	MJ101
FCRB043320	MF3k32	R101
FCRB043320	MF3k32	R102
FCRC061000	100k	R103
FCRC061000	100k	R104
FCRC061000	100k	R105
FCRC031000	100	R106
FCCE250470	47u/50	C101
FCCE100000	47u/16	C102
FCCE100000	47u/16	C103
FCCE100000	47u/16	C104
FCCE100000	47u/16	C105
FCCIM08770	Printed Board 11.0877 (Micro-Line)	CI101
FCBASX0900	YKF52-5005	J101
FCBASR0600	YKB21-3035	J102
FCBASJ0100	YKB21-5166	J103
FCBASJ0100	YKB21-5166	J104
FCTERM0100	Jumper Pin	J105
FCTERM0100	Jumper Pin	J106
FCTERM0100	Jumper Pin	J107
FCCTM00120	B12B-EH-A	J108
FCMJ000100	Jumper	MJ101
FCRB043320	MF3k32	R101
FCRB043320	MF3k32	R102
FCRC061000	100k	R103
FCRC061000	100k	R104
FCRC061000	100k	R105
FCRC031000	100	R106

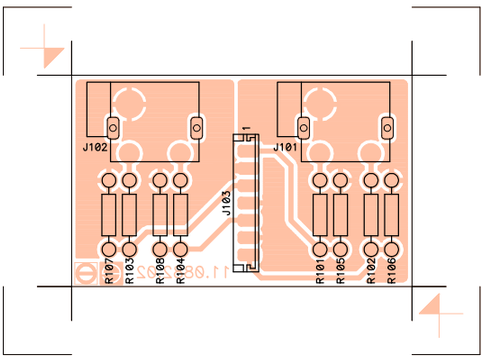

	related to: circuit no: 11.0882-02.00 schema no: 10.0567-01.01 insertion file no:	side: Component view: Reference	
	project n:	title: Line-Line Inputs Ct.	
number: 33.0706	version: 01.00	product n:	
drawn by: M. Amoros	date: 011119	approved: Domingo Mele	

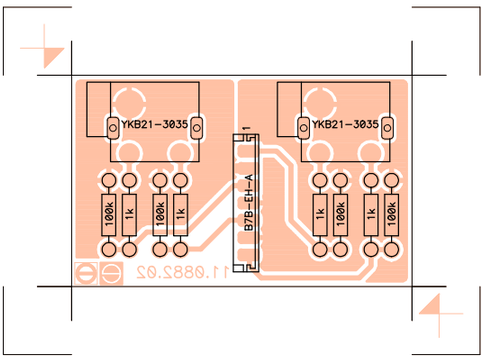

	related to: circuit no: 11.0882-02.00 schema no: 10.0567-01.01 insertion file no:		side: Component view: Value
	project n:	title: Line-Line Inputs Ct.	
number: 33.0707	version: 01.00	product n:	
drawn by: M. Amoros	date: 011119	approved: Domingo Mele	

PARTS LIST: PRINTED CIRCUIT 11.0882.02.00

Code	Description	Reference
FCCIM08820	Printed Board 11.0882 (Line-Line)	CI101
FCBASR0600	YKB21-3035	J101
FCBASR0600	YKB21-3035	J102
FCCTM00070	B7B-EH-A	J103
FCRC041000	1k	R101
FCRC041000	1k	R102
FCRC041000	1k	R103
FCRC041000	1k	R104
FCRC061000	100k	R105
FCRC061000	100k	R106
FCRC061000	100k	R107
FCRC061000	100k	R108

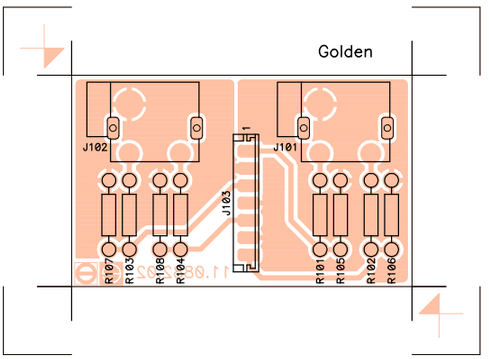

	related to: circuit no: 11.0882-02.00 schema no: 10.0587-01.01 insertion file no:	side: Component view: Reference	
	project n:	title: Phono-Line Inputs Ct.	
number: 33.0708	version: 01.00	product n:	
drawn by: M. Amoros	date: 011119	approved: Domingo Mele	

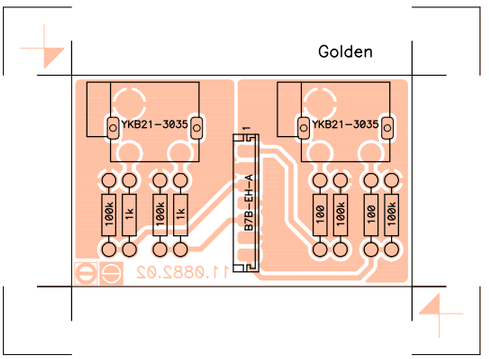

	related to: circuit no: 11.0882-02.00 schema no: 10.0587-01.01 insertion file no:	side: Component view: Value	
	project n:	title: Phono-Line Inputs Ct.	
number: 33.0709	version: 01.00	product n:	
drawn by: M. Amoros	date: 011119	approved: Domingo Mele	

PARTS LIST: 3 x PRINTED CIRCUIT 11.0882.02.00

Code	Description	Reference
FCCIM08820	Printed Board 11.0882 (Phono-Line)	CI101
FCBASR0601	YKB21-3035	J101
FCBASR0600	YKB21-3035	J102
FCCTM00070	B7B-EH-A	J103
FCRC031000	100	R101
FCRC031000	100	R102
FCRC041000	1k	R103
FCRC041000	1k	R104
FCRC061000	100k	R105
FCRC061000	100k	R106
FCRC061000	100k	R107
FCRC061000	100k	R108
FCCIM08820	Printed Board 11.0882 (Phono-Line)	CI101
FCBASR0601	YKB21-3035	J101
FCBASR0600	YKB21-3035	J102
FCCTM00070	B7B-EH-A	J103
FCRC031000	100	R101
FCRC031000	100	R102
FCRC041000	1k	R103
FCRC041000	1k	R104
FCRC061000	100k	R105
FCRC061000	100k	R106
FCRC061000	100k	R107
FCRC061000	100k	R108
FCCIM08820	Printed Board 11.0882 (Phono-Line)	CI101
FCBASR0601	YKB21-3035	J101
FCBASR0600	YKB21-3035	J102
FCCTM00070	B7B-EH-A	J103
FCRC031000	100	R101
FCRC031000	100	R102
FCRC041000	1k	R103
FCRC041000	1k	R104
FCRC061000	100k	R105
FCRC061000	100k	R106
FCRC061000	100k	R107
FCRC061000	100k	R108

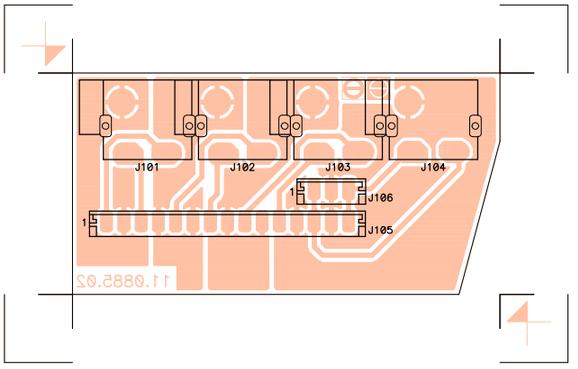

	related to: circuit no: 11.0885-02.00 schema no: 10.0594-01.00 insertion file no:	side: Component view: Reference	
	project n:	title: Aux In-Mix-Xfa-Xfb Ct.	
number: 33.0716	version: 01.00	product n:	
drawn by: M. Amoros	date: 011120	approved: Domingo Mele	

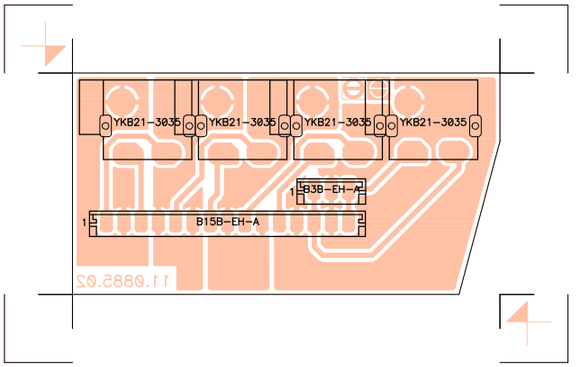

	related to: circuit no: 11.0885-02.00 schema no: 10.0594-01.00 insertion file no:	side: Component view: Value	
	project n:	title: Aux In-Mix-Xfa-Xfb Ct.	
number: 33.0717	version: 01.00	product n:	
drawn by: M. Amoros	date: 011120	approved: Domingo Mele	

PARTS LIST: PRINTED CIRCUIT 11.0885.02.00

Code	Description	Reference
FCCIM08850	Printed Board 11.0885 (Aux In-Mix-Xfa-Xfb)	CI101
FCBASR0600	YKB21-3035	J101
FCBASR0600	YKB21-3035	J102
FCBASR0600	YKB21-3035	J103
FCBASR0600	YKB21-3035	J104
FCCTM00150	B15B-EH-A	J105
FCCTM00030	B3B-EH-A	J106

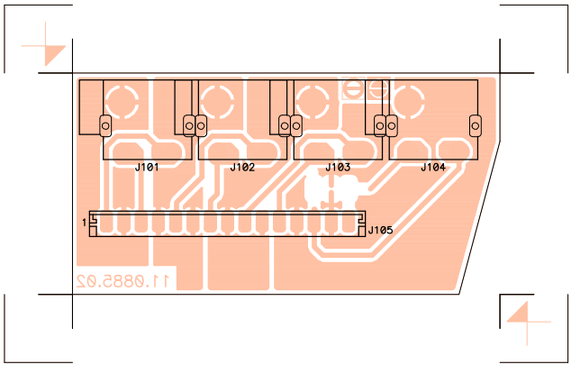

	related to: circuit no: 11.0885–02.00 schema no: 10.0595–01.00 insertion file no:	side: Component view: Reference	
	project n:	title: Rec1/2–Aux–Cue Ct.	
number: 33.0718	version: 01.00	product n:	
drawn by: M. Amoros	date: 011120	approved: Domingo Mele	

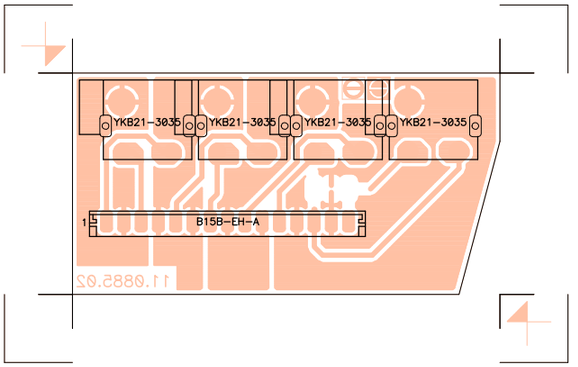

	related to: circuit no: 11.0885-02.00 schema no: 10.0595-01.00 insertion file no:	side: Component view: Value	
	project n:	title: Rec1/2-Aux-Cue Ct.	
number: 33.0719 / version: 01.00	product n:		
drawn by: M. Amoros / date: 011120	approved: Domingo Mele		

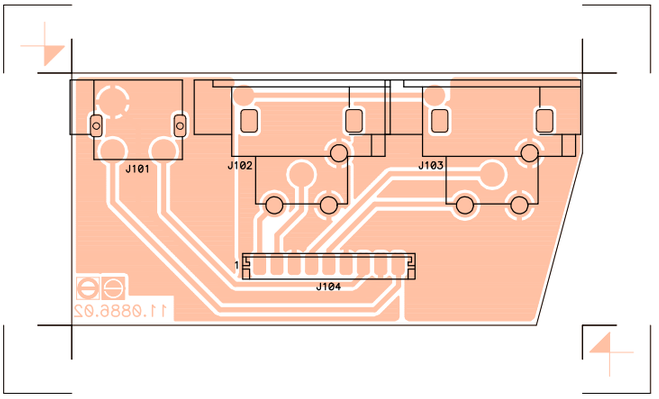

	related to: circuit no: 11.0886-02.00 schema no: 10.0571-01.01 insertion file no:	side: Component view: Reference	
	project n:	title: XLR+RCA Outputs Ct.	
number: 33.0710	version: 01.00	product n:	
drawn by: M. Amoros	date: 011119	approved: Domingo Mele	

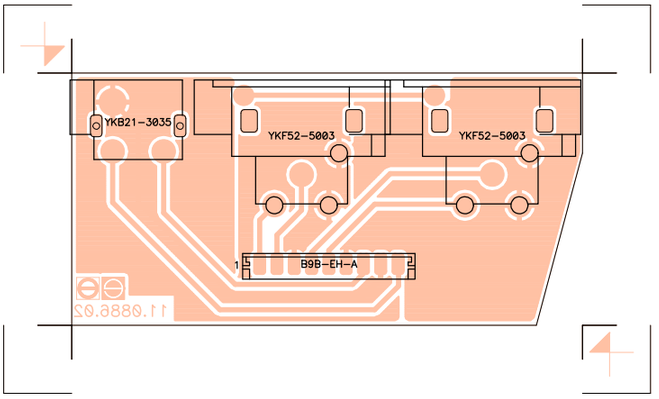

		related to: circuit no: 11.0886-02.00 schema no: 10.0571-01.01 insertion file no:	side: Component view: Value	
		project n:	title: XLR+RCA Outputs Ct.	
number: 33.0711	version: 01.00	product n:		
drawn by: M. Amoros	date: 011119	approved: Domingo Mele		

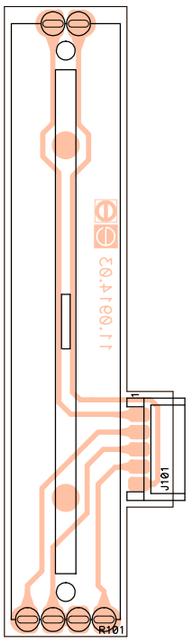

	related to: circuit no: 11.0914-03.00 schema no: insertion file no:	side: Component view: Reference	
	project n:	title: Potentiometer Ct.	
number: 33.0694	version: 01.01	product n:	
drawn by: M. Amoros	date: 011106	approved: Domingo Mele	

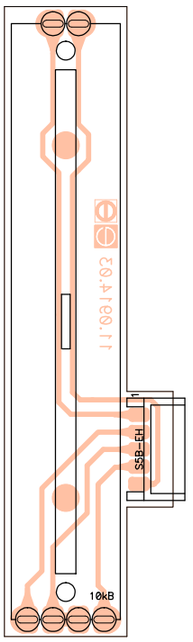

	related to: circuit no: 11.0914-03.00 schema no: insertion file no:	side: Component	
		view: Value	
	project n:	title: Potentiometer Ct.	
number: 33.0695	version: 01.01	product n:	
drawn by: M. Amoros	date: 011106	approved: Domingo Mele	

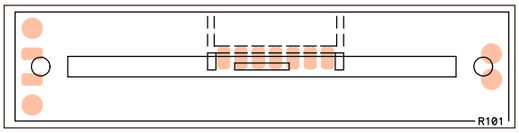

	related to: circuit no: 11.0922-01.00 schema no: 10.0589-01.00 insertion file no:	side: Component view: Reference	
	project n:	title: Crossfader Ct.	
number: 33.0700	version: 01.00	product n:	
drawn by: M. Amoros	date: 011114	approved: Domingo Mele	

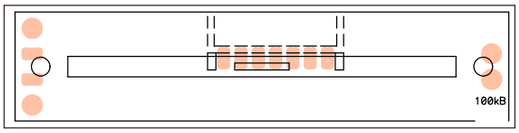

	related to: circuit no: 11.0922-01.00 schema no: 10.0589-01.00 insertion file no:	side: Component	
		view: Value	
	project n:	title: Crossfader Ct.	
number: 33.0701	version: 01.00	product n:	
drawn by: M. Amoros	date: 011114	approved: Domingo Mele	

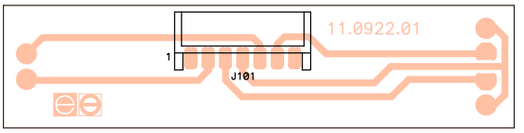

		related to: circuit no: 11.0922-01.00 schema no: 10.0589-01.00 insertion file no:	side: Solder	
			view: Reference	
		project n:	title: Crossfader Ct.	
number: 33.0702	version: 01.00	product n:		
drawn by: M. Amoros	date: 011114	approved: Domingo Mele		

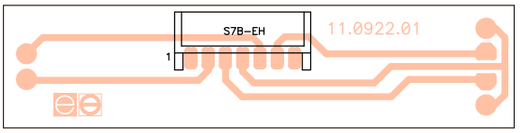

		related to: circuit no: 11.0922-01.00 schema no: 10.0589-01.00 insertion file no:	side: Solder	
			view: Value	
		project n:	title: Crossfader Ct.	
number: 33.0703	version: 01.00	product n:		
drawn by: M. Amoros	date: 011114	approved: Domingo Mele		

PARTS LIST: PRINTED CIRCUIT 11.0885.02.00 + varios

Code	Description	Reference
FCCIM08850	Printed Board 11.0885 (Rec1-Aux out-Rec2-Cue)	CI101
FCBASR0600	YKB21-3035	J101
FCBASR0600	YKB21-3035	J102
FCBASR0600	YKB21-3035	J103
FCBASR0600	YKB21-3035	J104
FCCTM00150	B15B-EH-A	J105
FCCIM08860	Printed Board 11.0886 (Out1L-Out1R-Out2)	CI101
FCBASR0600	YKB21-3035	J101
FCBASX1000	YKF52-5003	J102
FCBASX1000	YKF52-5003	J103
FCCTM00090	B9B-EH-A	J104
FCCIM09140	Printed Board 11.0914.03.00 (Cto. Fader)	CI101
FCCIM09140	Printed Board 11.0914.03.00 (Cto. Fader)	CI101
FCCIM09140	Printed Board 11.0914.03.00 (Cto. Fader)	CI101
FCCIM09140	Printed Board 11.0914.03.00 (Cto. Fader)	CI101
FCCIM09140	Printed Board 11.0914.03.00 (Cto. Fader)	CI101
FCCIM09140	Printed Board 11.0914.03.00 (Cto. Fader)	CI101
FCCIM09140	Printed Board 11.0914.03.00 (Cto. Fader)	CI101
FCCIM09140	Printed Board 11.0914.03.00 (Cto. Fader)	CI101
FCCIM09140	Printed Board 11.0914.03.00 (Cto. Fader)	CI101
FCCTM10050	S5B-EH	J101
FCCTM10050	S5B-EH	J101
FCCTM10050	S5B-EH	J101
FCCTM10050	S5B-EH	J101
FCCTM10050	S5B-EH	J101
FCCTM10050	S5B-EH	J101
FCCTM10050	S5B-EH	J101
FCCTM10050	S5B-EH	J101
FCCTM10050	S5B-EH	J101
FCCIM09220	Printed Board 11.0922.01.00 (Cto. Crossfader)	CI101
FCCTM10070	S7B-EH	J101

author: J. Colomines	date: 100713	project: M05-01	product:
approved:	title:	TECHNICAL CHARACTERISTICS (HIT MUSIC)	
num: 53.0153 version: 01.00 A.S.			

Inputs Sensitivity nom/Impedance	LINE (-10dBV)	-10dBV/50kΩ
	LINE (0dBV)	0dBV/50kΩ
	PHONO	-40dBV/50kΩ
	MICRO (BAL)	-50dBV/>1kΩ
	MICRO ATT. (BAL)	-30dBV/>1kΩ
	MIX	0dBV/>50kΩ
	INSERT	0dBV/50kΩ
Outputs Level/Minimum Load	MASTEWR A (BAL)	0(+6)dBV*/600Ω 1(2)V
	MASTER B	0(+6)dBV*/2.2kΩ 1(2)V
	CONTROL ROOM	0dBV/10kΩ
	REC1	0dBV/10kΩ
	REC2	0dBV/10kΩ
	A	0dBV/2.2kΩ
	B	0dBV/2.2kΩ
	INSERT	0dBV/2.2kΩ
	AUX	0dBV/2.2kΩ
	PHONE	230mW/400Ω
Frequency Response	LINE	15Hz÷35kHz -1dB
	MICRO BAL	20Hz÷25kHz -1dB
	PHONO	RIAA ±0.5dB
THD+N	LINE	<0.03%
	MICRO	<0.09%
	PHONO	<0.2%
CMRR	MICRO	>70dB @ 1kHz
Signal Noise Ratio	LINE	>95dB
	MICRO	>85dB
	PHONO	>80dB
Gain control all inputs	GAIN	± 20dB
Tone control channel 1 to 5	LOW	-20/+10dB
	MID	-20/+10dB
	HIGH	-20/+10dB
Tone control channel 6 to 8	LOW	-30/+10dB
	MID	-25/+10dB
	HIGH	-30/+10dB
Kill Filters channel 6 to 8 (cut frequency at -6dB) Slope 12dB/oct in all the cases	LOW MID HIGH	200Hz 6.5kHz & 200Hz 6.5kHz
Phantom voltage		+18VDC/5mA max.
Mains		90-264VAC 47-63Hz
Power consumption		36VA
Dimensions	Panel	482.6x355mm
	Depth	109mm
Weight		5.6kg.

(*)Internally selectable

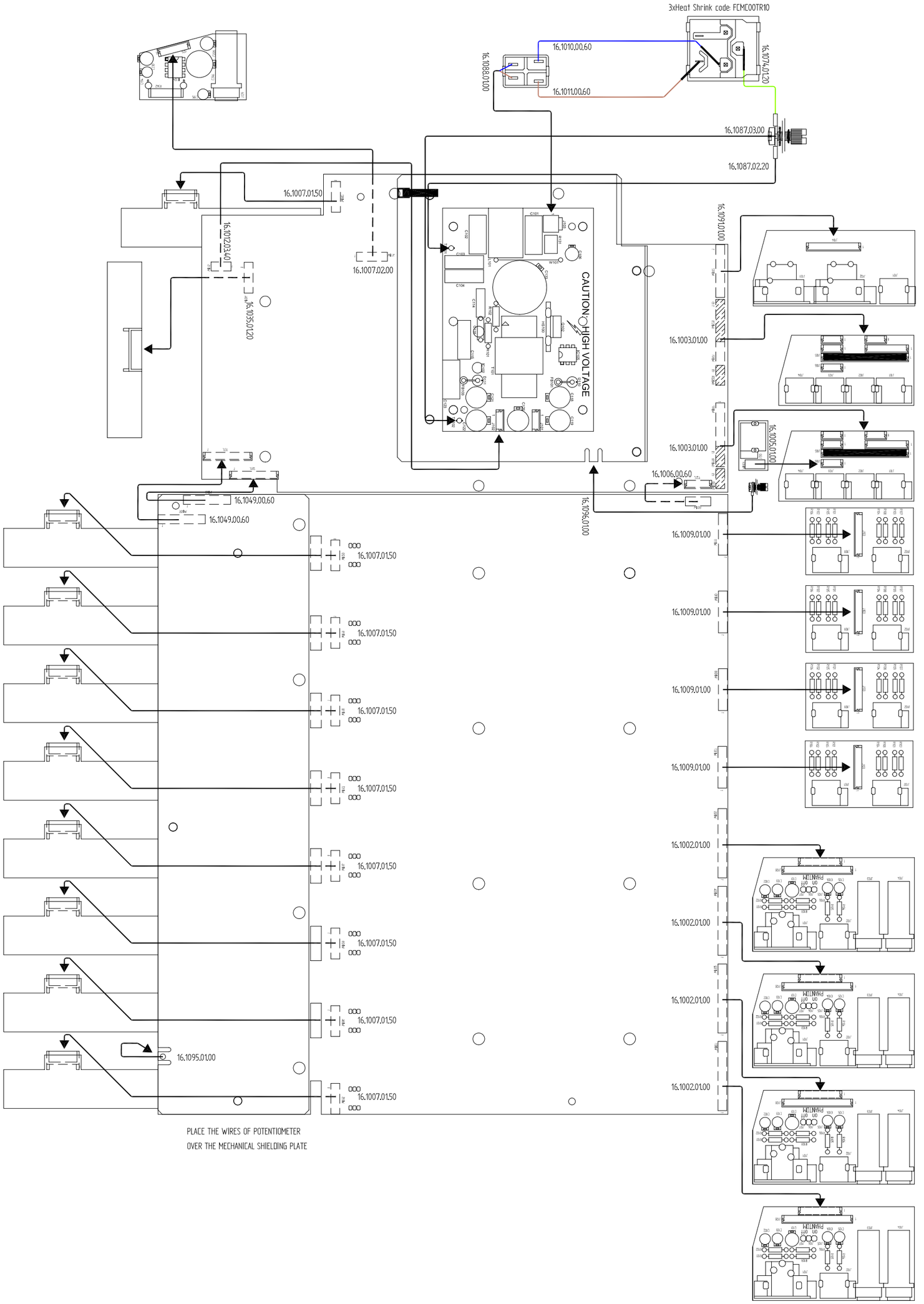
3xHeat Shrink code: FEMC00TR10
16.1010.00.60
16.1074.01.20
16.1083.01.00
16.1011.00.60
16.1087.03.00
16.1087.02.20
16.1007.01.50
16.1007.02.00
16.1012.03.40
16.1035.01.20
16.1091.01.00
CAUTION HIGH VOLTAGE
16.1003.01.00
16.1003.01.00
16.1005.01.00
16.1006.00.60
16.1096.01.00
16.1049.00.60
16.1049.00.60
16.1009.01.00
16.1009.01.00
16.1009.01.00
16.1002.01.00
16.1002.01.00
16.1002.01.00
16.1002.01.00
16.1007.01.50
16.1007.01.50
16.1007.01.50
16.1007.01.50
16.1007.01.50
16.1007.01.50
16.1095.01.00
PLACE THE WIRES OF POTENTIOMETER
OVER THE MECHANICAL SHIELDING PLATE

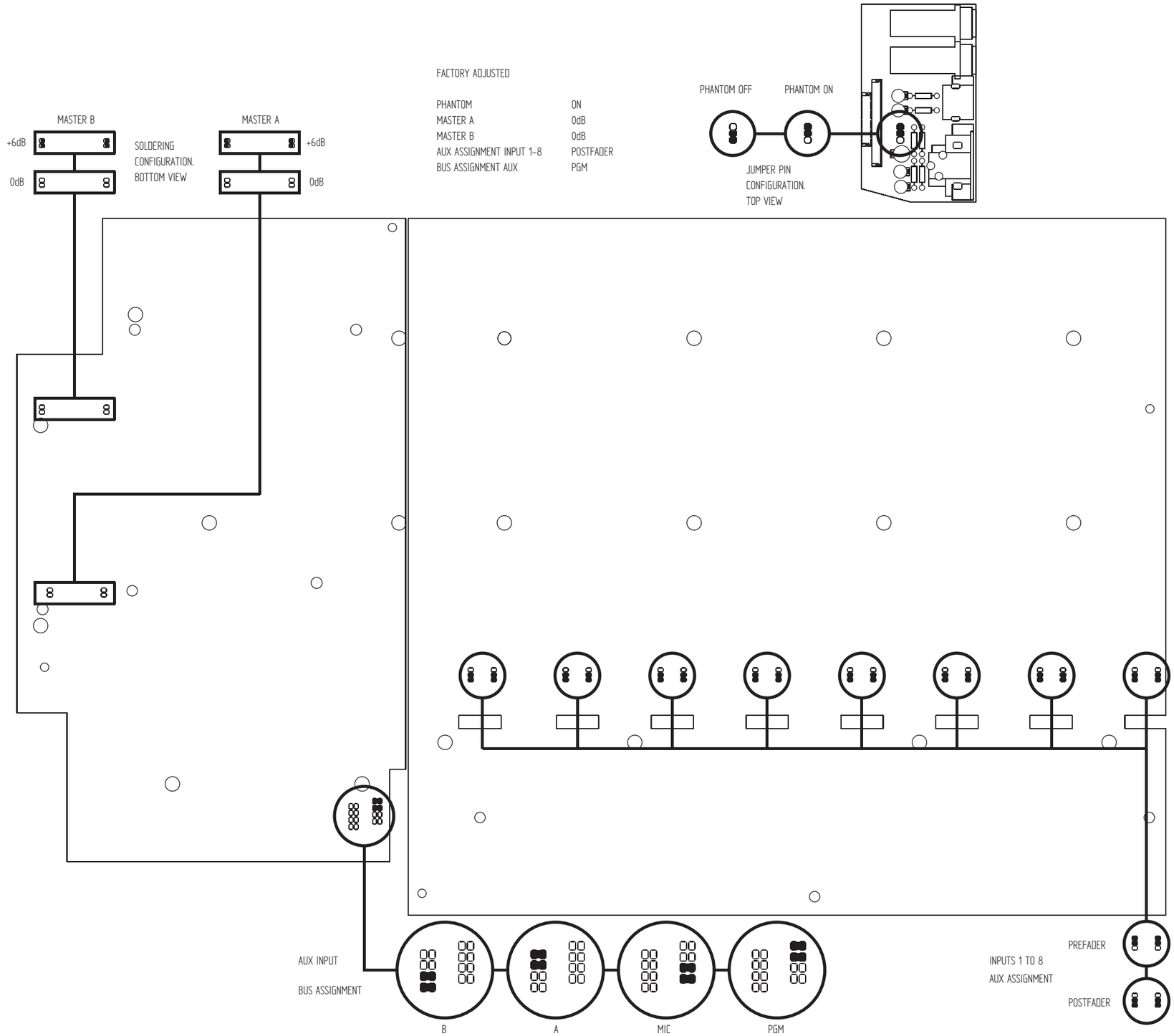
MASTER B
+6dB
0dB
SOLDERING
CONFIGURATION.
BOTTOM VIEW
MASTER A
+6dB
0dB
FACTORY ADJUSTED
PHANTOM ON
MASTER A 0dB
MASTER B 0dB
AUX ASSIGNMENT INPUT 1-8 POSTFADER
BUS ASSIGNMENT AUX PGM
PHANTOM OFF
PHANTOM ON
JUMPER PIN
CONFIGURATION.
TOP VIEW
AUX INPUT
BUS ASSIGNMENT
B
A
MIC
PGM
INPUTS 1 TO 8
AUX ASSIGNMENT
PREFADER
POSTFADER

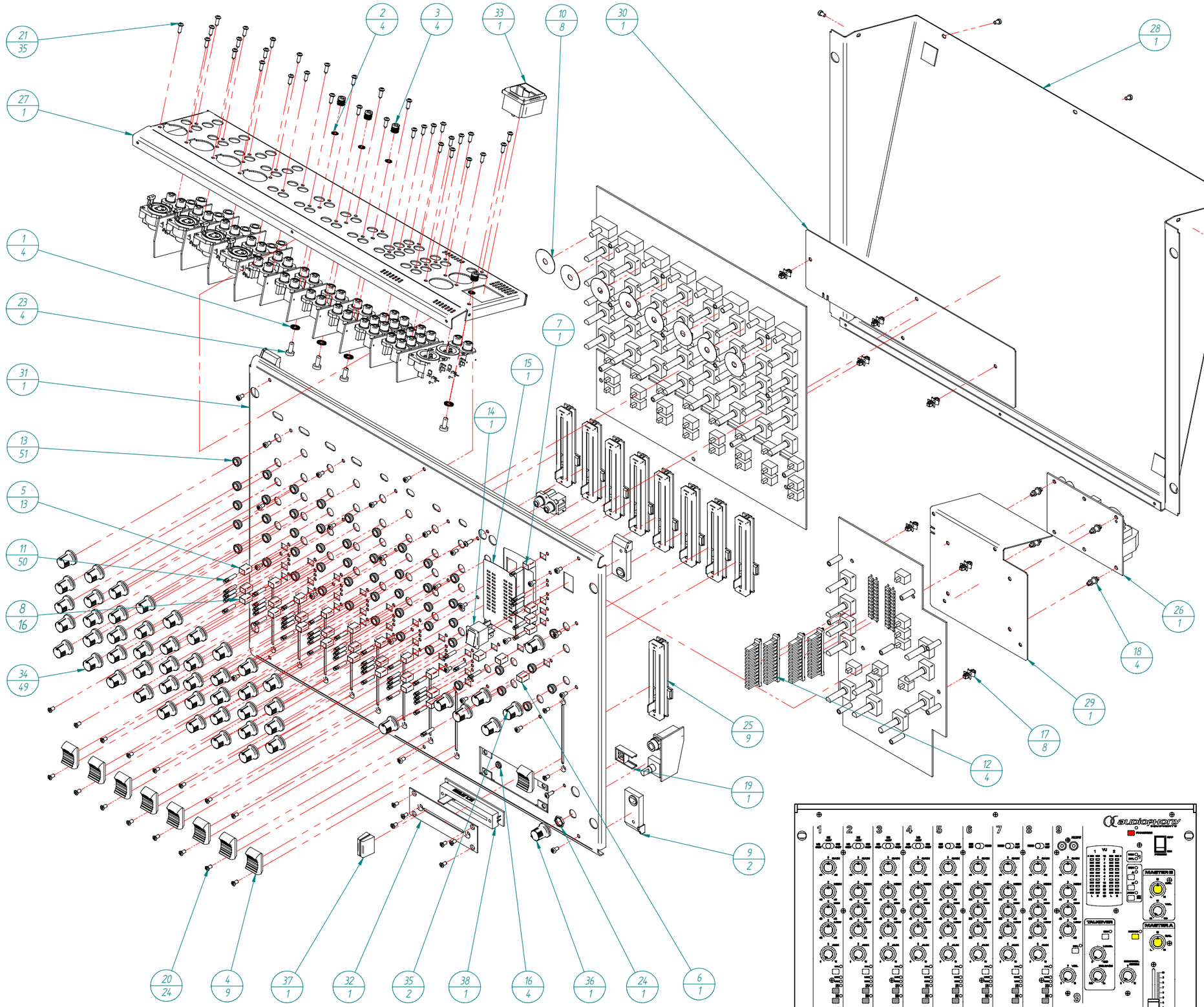

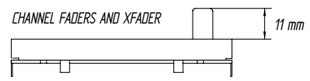

NOTE:
TO VIEW GROUND CABLES POSITION, SEE WIRING DIAGRAM NUMBER 31.0151

N°	Qty	ECLER Code	Description
1	4	FCARDE040000	TOOTHED WASHER M4
2	4	FCARS4000000	SEGMENTED WASHER M4
3	4	FCBOR0030000	GROUND TERMINAL
4	9	FCBOTD092000	FADER KNOB 15x25
5	13	FCBOTRI01000	PUSH BUTTON 5,5 x 7,5 WHITE
6	1	FCBOTRI02000	PUSH BUTTON 5,5 x 7,5 YELLOW
7	1	FCBOTRI03000	PUSH BUTTON 5,5 x 7,5 RED
8	16	FCBOTRI04000	PUSH BUTTON 5,5 x 7,5 GREY
9	2	FCCANTM79000	CORNERPIECE LEFT-RIGHT (COUPLE)
10	8	FCDISC626000	CIRCULAR DUST FILTER
11	50	FCGUIAL10000	LIGHT PIPE GUIDE VERTICAL
12	4	FCGUIAL20000	12 WAY LIGHT PIPE VERTICAL
13	51	FCINSPLA2000	ROTARY POT. PLASTIC GUIDE
14	1	FCINTRED2000	MAINS SWITCH
15	1	FCLXVU012000	VU METER SILKSCREEN STICKER
16	4	FCREM0040000	PS-M3 RIVET
17	8	FCSEPWLS0600	PLASTIC SPACER 6MM
18	4	FCSOPMSP4000	PLASTIC SPACER MSP-4N
19	1	FCSOPRE10000	HEADPHONES PLASTIC SUPPORT
20	24	FCT350300500	SREW DIN966 M3x5 BLACK
21	35	FCT400290900	SCREW 2,9x9,5 D7981F BLACK
22	31	FCT850300500	SCREW M3x5 REDUCED HEAD
23	4	FCT850411000	SCREW M4x10 TRILOB. WHITE
24	1	FCTUPOT00000	ROTARY POT. NUT M9
25	9	FINS01109140	FADER 60MM W/BOARD
26	1	FMFONT40C000	FONT40C POWER SUPPLY
27	1	FP0266900010	CONNECTION PANEL
28	1	FP0267000000	BOTTOM COVER
29	1	FP0267100000	POWER SUPPLY MECHANICAL SUPPORT
30	1	FP0270400000	BUS SHIELDING PLATE
31	1	FP0327200000	FRONT PANEL
32	1	FP0327300000	CROSSFADER PANEL
33	1	FRBASRE20150	MAINS SOCKET
34	49	FRBOT0005000	ROT. KNOB D15 WHITE INFERIOR NEW
35	2	FRBOT0007000	ROT. KNOB D15 YELLOW INFERIOR NEW
36	1	FRBOT0030000	ROTARY KNOB D15 WHITE NEW
37	1	FRBOTD003000	XFADER/FADER KNOB
38	1	GENERIC	FADER/XFADER 2X100K 45MM ECLER

title:

MECHANICAL DIAGRAM

N°	Qty.	Code	Description
1	4	FCARAT300000	SCREW INSULATOR
2	4	FCARN5000000	METAL WASHER 5x11.5x0.8
3	1	FCBOL0010000	PLASTIC SLEEVE 60x80
4	1	FCBOLS050000	STANDARD BAG 43x60
5	1	FCCAJSTA0601	PACKING CARDBOARD BOX
6	2	FCCANT109000	INTERIOR REINFORCEMENT
7	1	FCCONX017500	MAINS CABLE 3x1
8	1	FCETI0951140	PRODUCT LABEL PACK (ONE FOR EACH UNIT)
9	1	FCFUNMAN0000	USER MANUAL BAG
10	1	FCMANMAC90VH	USER MANUAL
11	4	FCPIE1125500	RUBBER FOOT

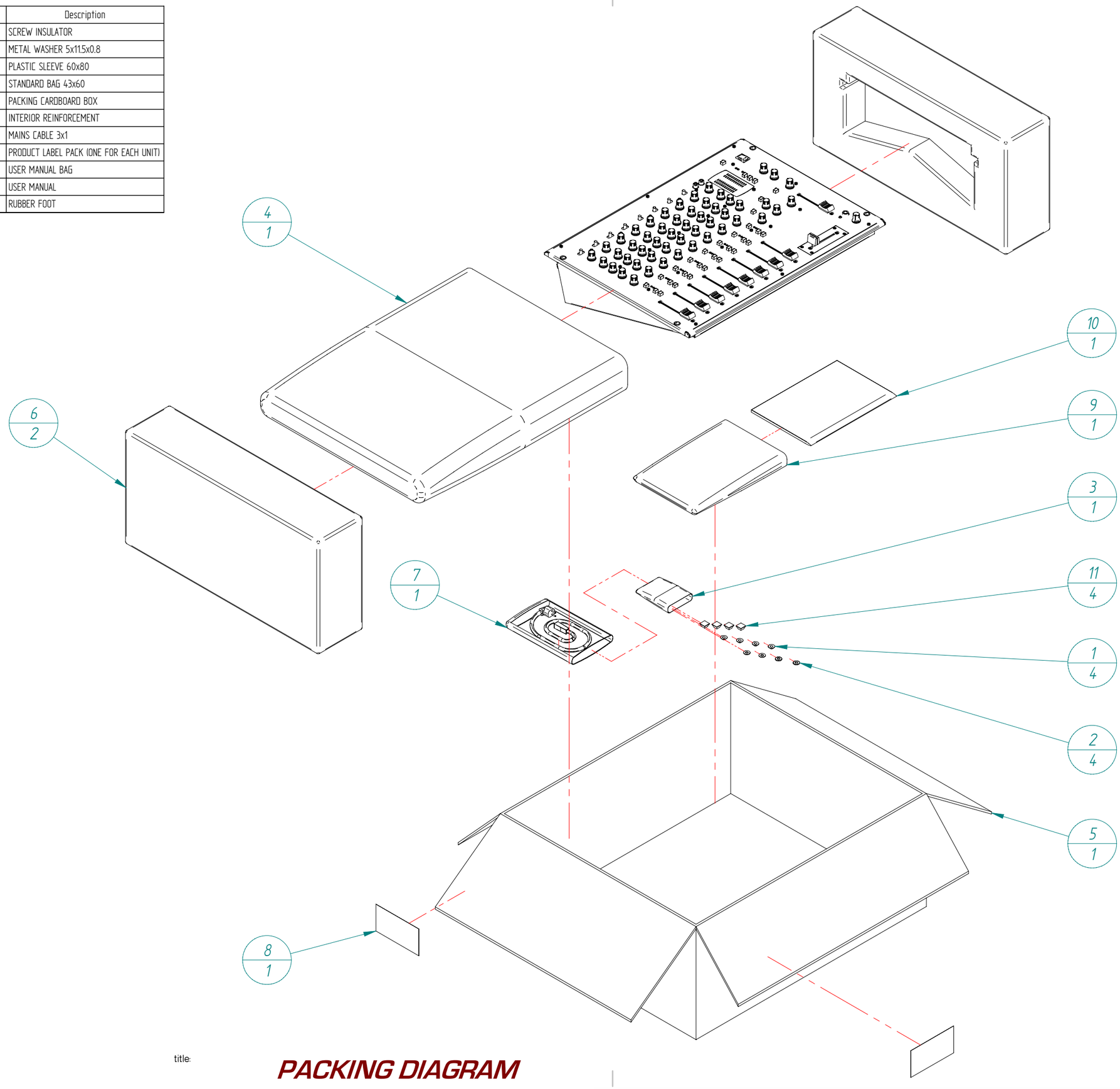

title:

PACKING DIAGRAM