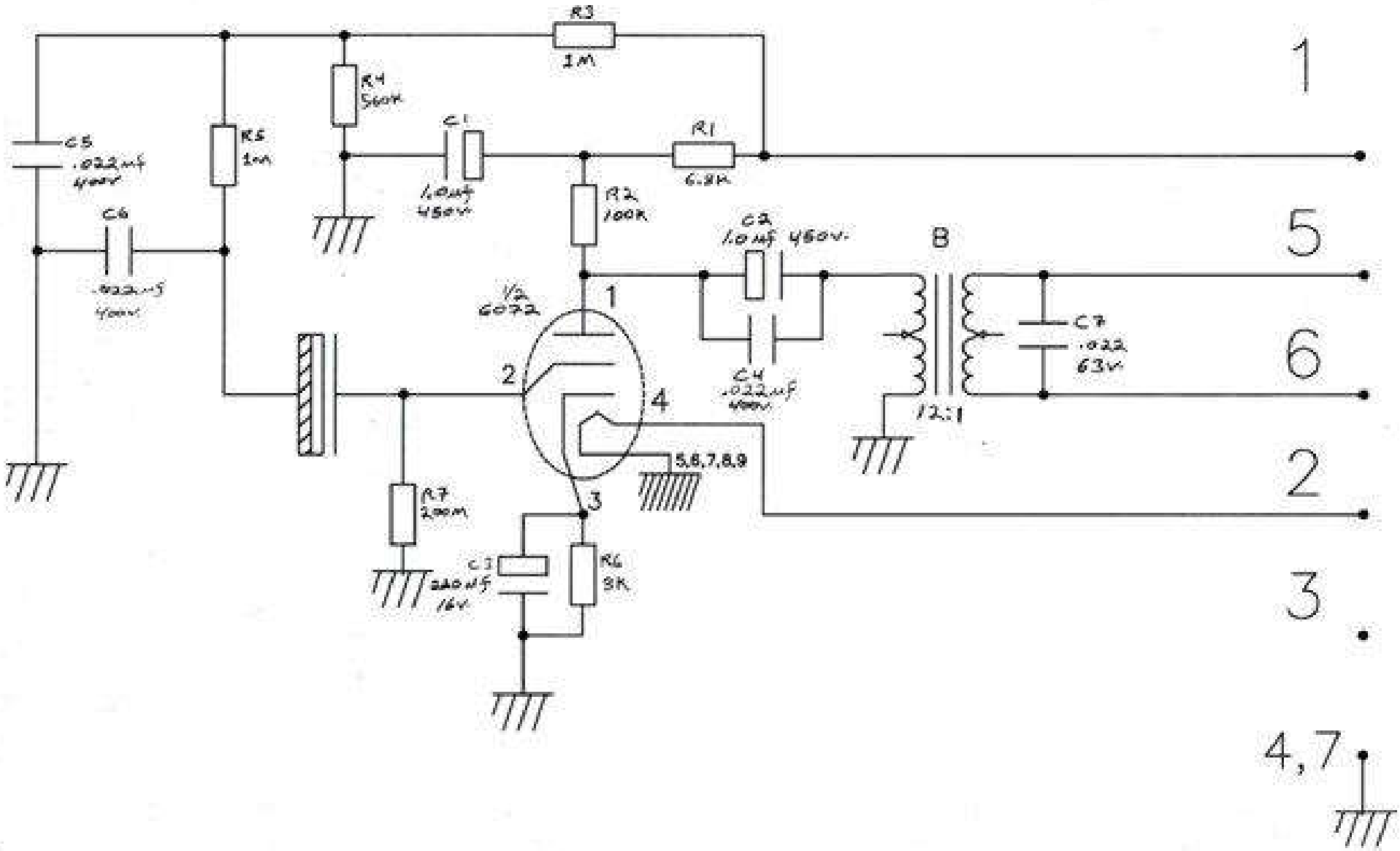
R3
1M
R4
560K
C1
1.0uf
450V
R1
6.8K
R2
100K
C5
.022uf
400V
R5
1M
C6
.022uf
400V
C2
1.0uf 450V.
B
1/2
6072
1
2
4
3
5,6,7,8,9
C4
.022uf
400V
C7
.022
63V
12:1
R7
200M
C3
220uf
16V
R6
3K
1
5
6
2
3
4,7