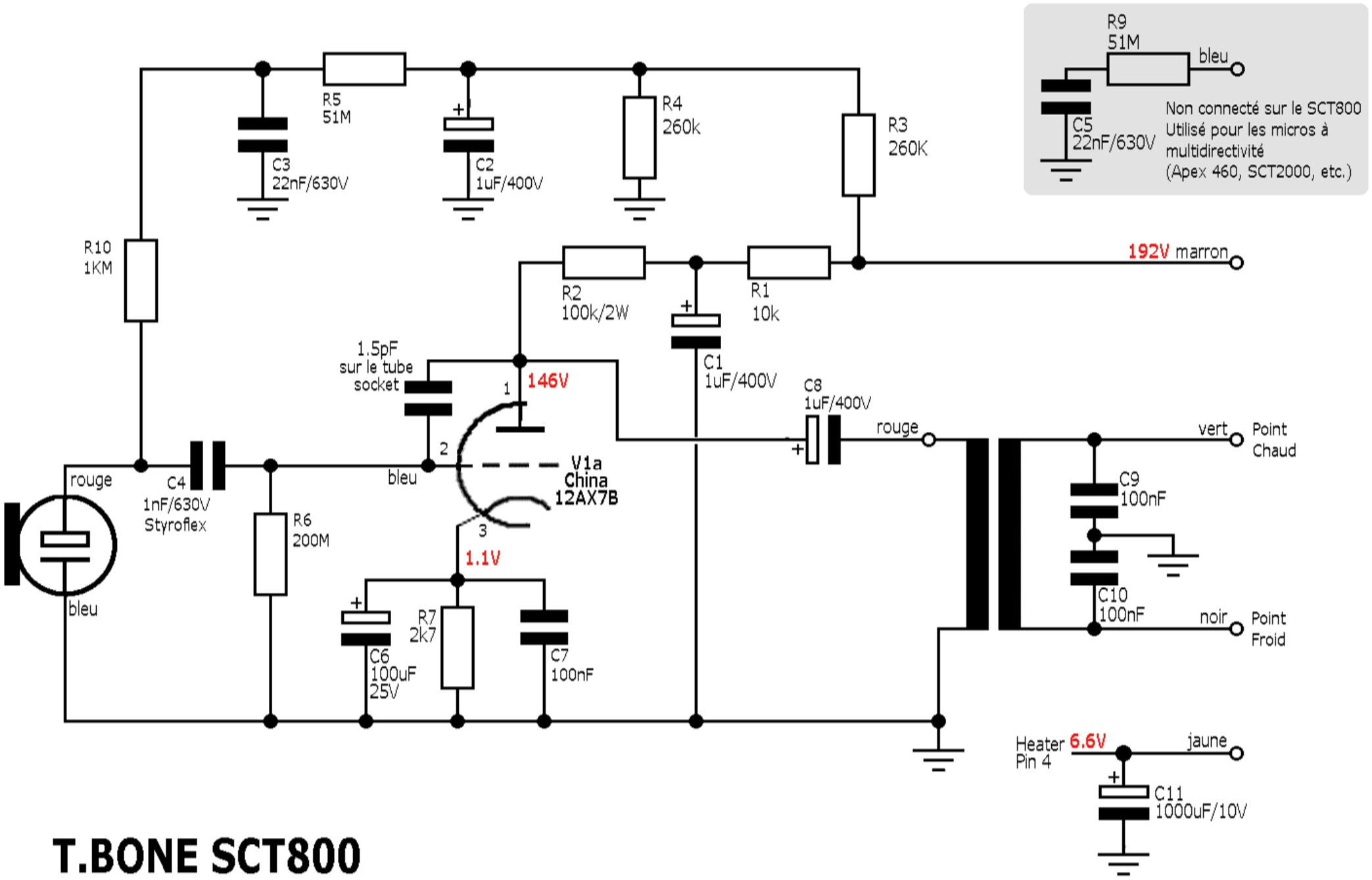

T.BONE SCT800

drawn by Blaise SCOLA-GRIMALDI (2011)