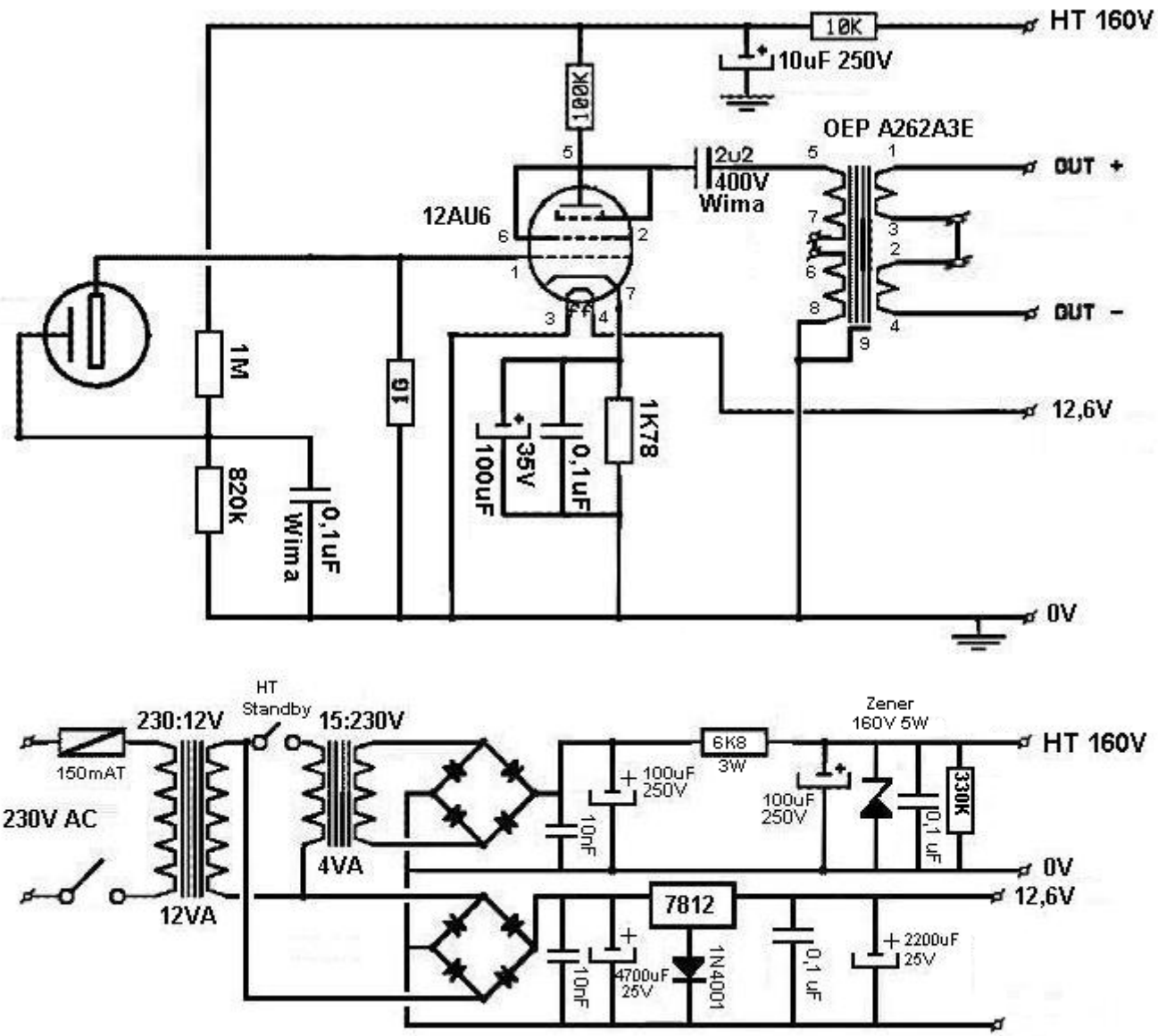
10K
HT 160V
10uF 250V
100K
OEP A262A3E
2u2
400V
Wima
OUT +
12AU6
OUT -
1M
16
1K78
12,6V
100uF
35V
0,1uF
820K
0,1uF
Wima
0V
HT
Standby
230:12V
15:230V
Zener
160V 5W
6K8
3W
HT 160V
150mAT
100uF
250V
100uF
250V
230V AC
10nF
0,1 uF
330K
4VA
0V
12,6V
7812
12VA
1N4001
10nF
4700uF
25V
0,1 uF
2200uF
25V