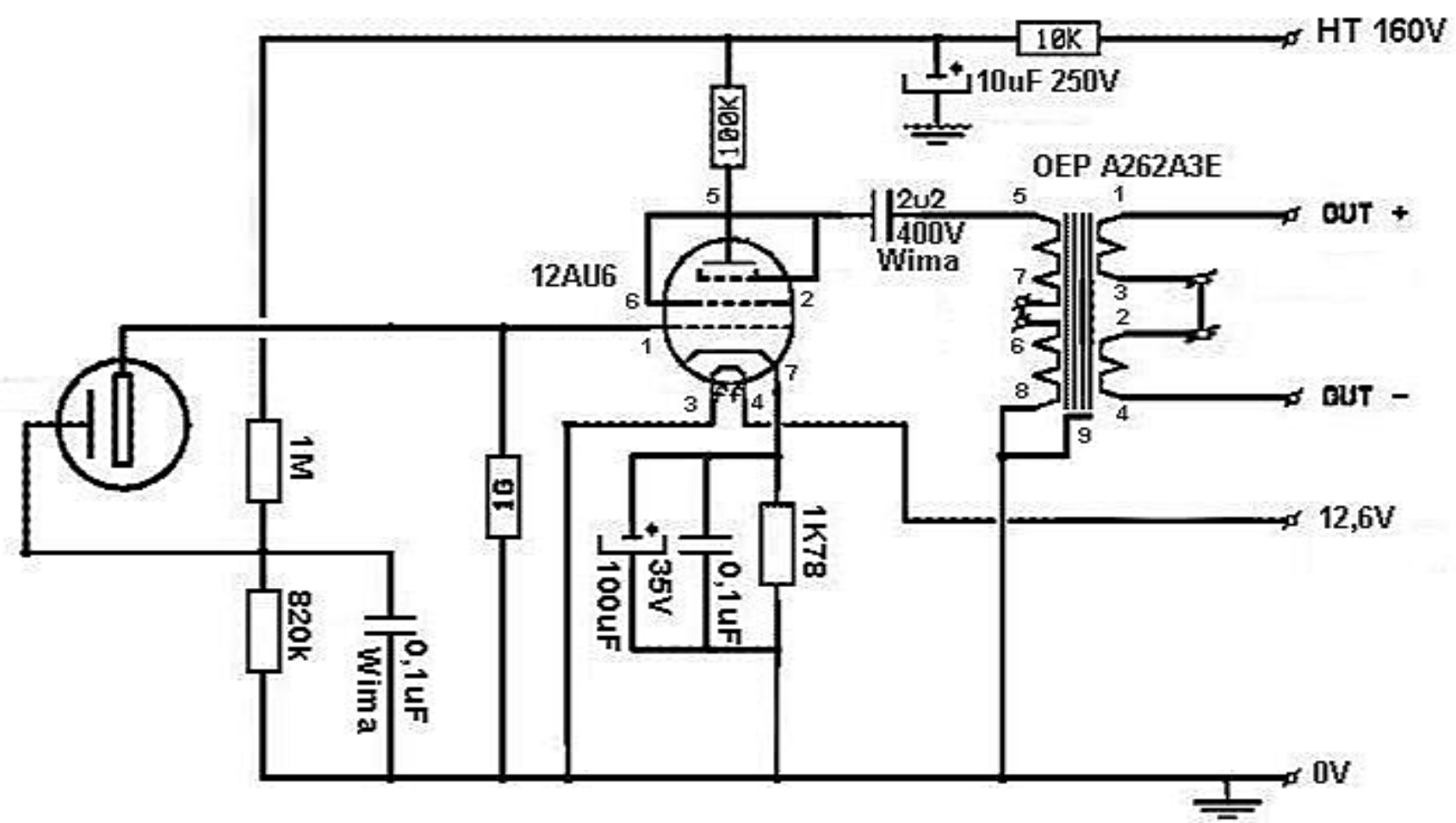
10K
HT 160V
10uF 250V
100K
OEP A262A3E
2u2
400V
Wima
12AU6
OUT +
OUT -
1M
10
820k
0,1uF
Wima
100uF
35V
0,1uF
1K78
12,6V
0V

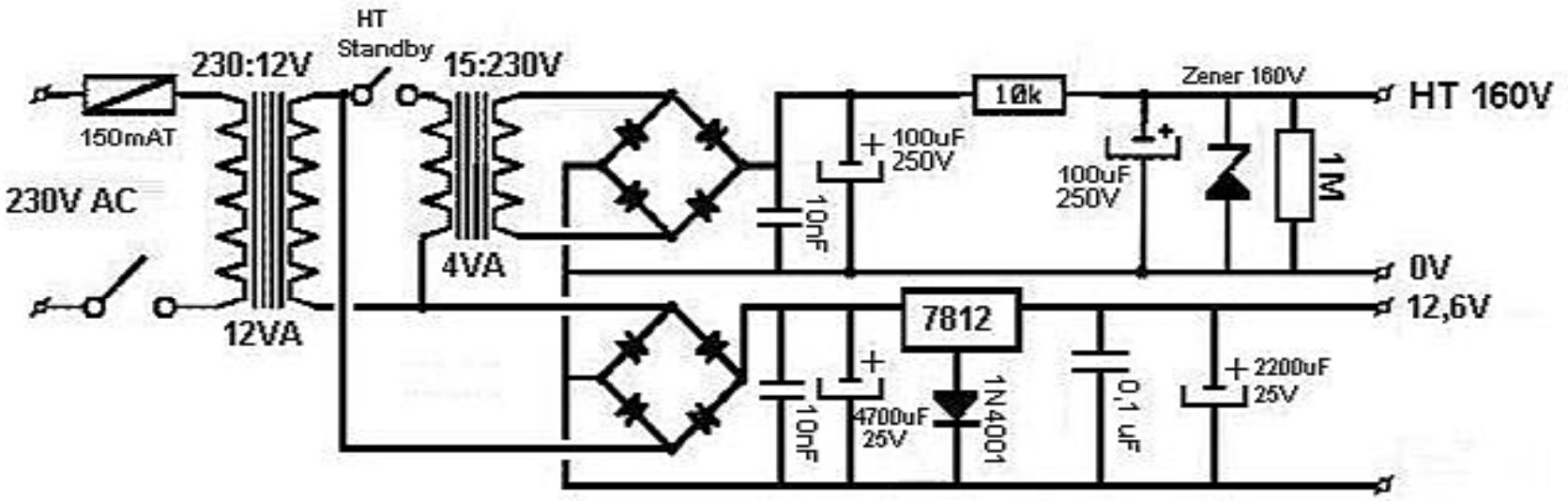
HT
Standby
230:12V
15:230V
150mAT
230V AC
12VA
4VA
10k
Zener 160V
HT 160V
100uF
250V
10nF
100uF
250V
1M
0V
12,6V
7812
10nF
4700uF
25V
1N4001
0,1 uF
2200uF
25V