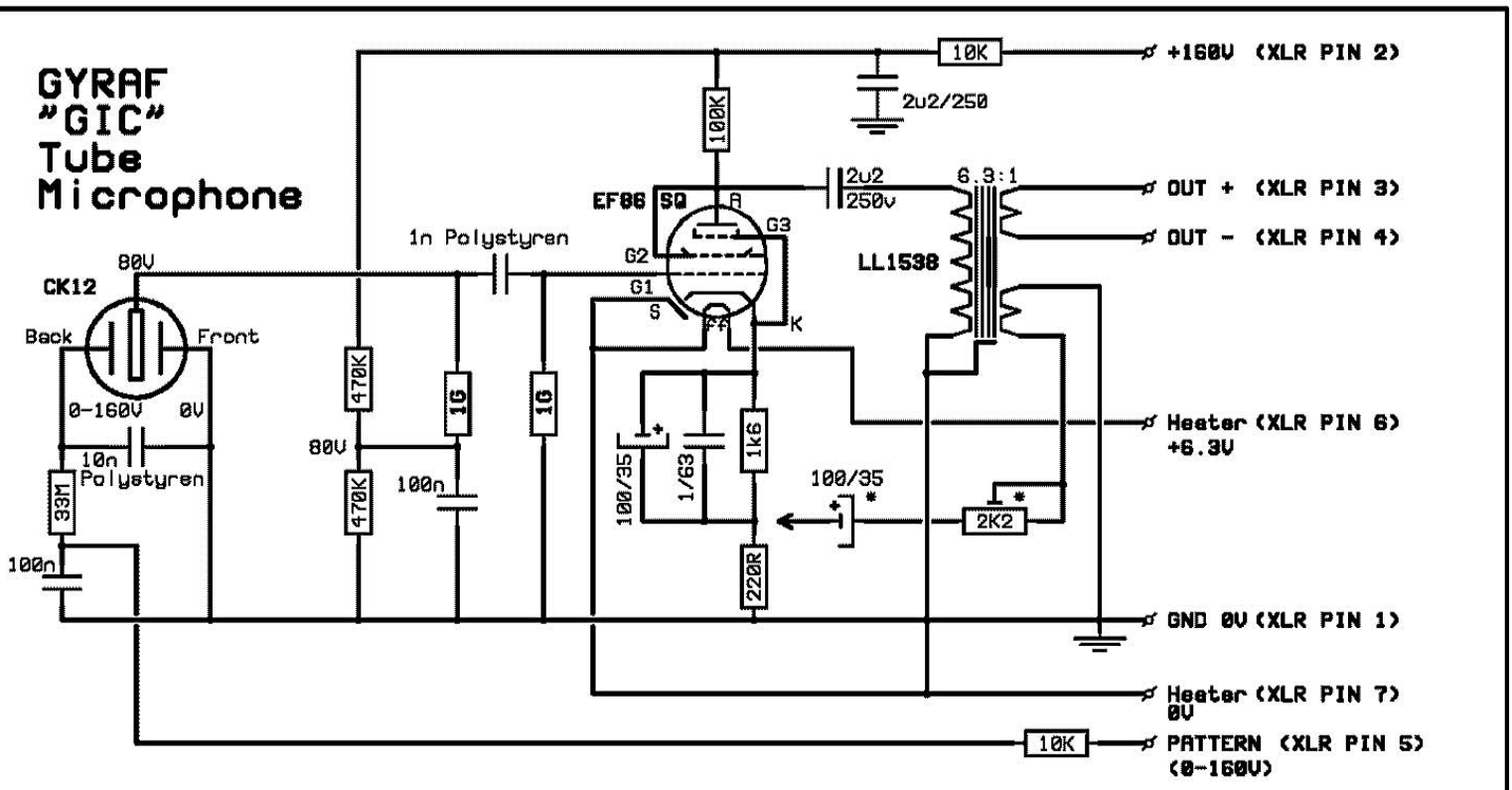

Polarization Voltage:
0V = Omnidirectional
80V = Cardioid
160V = Figure-of-Eight

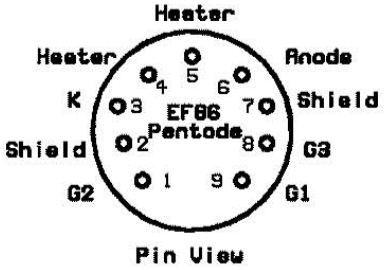

Gyraf Audio	
www.gyraf.dk	
Rev no # 2	Date 20-07-2002
Subject: GYRAF "GIC" TUBE AND TRANSFORMER MICROPHONE	
Filename: GIC.SCH	E=1.17
Size:	Mount:

REV#2: PIN NUMBERS. LM317 REGULATOR

* =Feedback, should be omitted

