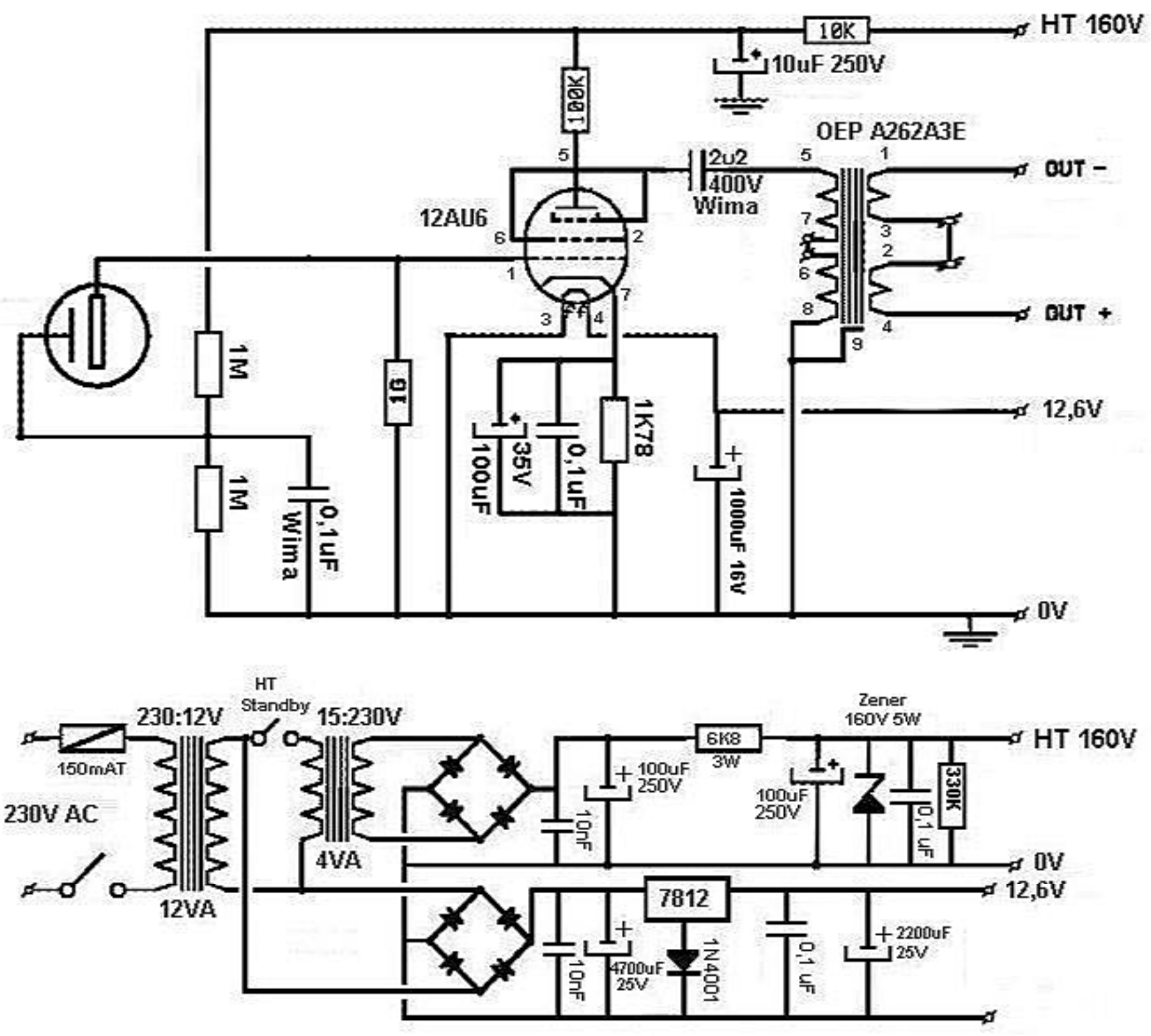
10K
HT 160V
10uF 250V
100K
OEP A262A3E
2u2
400V
Wima
OUT -
12AU6
OUT +
1M
1M
1G
0,1uF
Wima
100uF
35V
0,1uF
1K78
1000uF 16V
12,6V
0V
HT
Standby
230:12V
15:230V
150mAT
230V AC
12VA
4VA
6K8
3W
Zener
160V 5W
HT 160V
100uF
250V
10nF
100uF
250V
330K
0,1 uF
0V
7812
12,6V
10nF
4700uF
25V
1N4001
0,1 uF
2200uF
25V