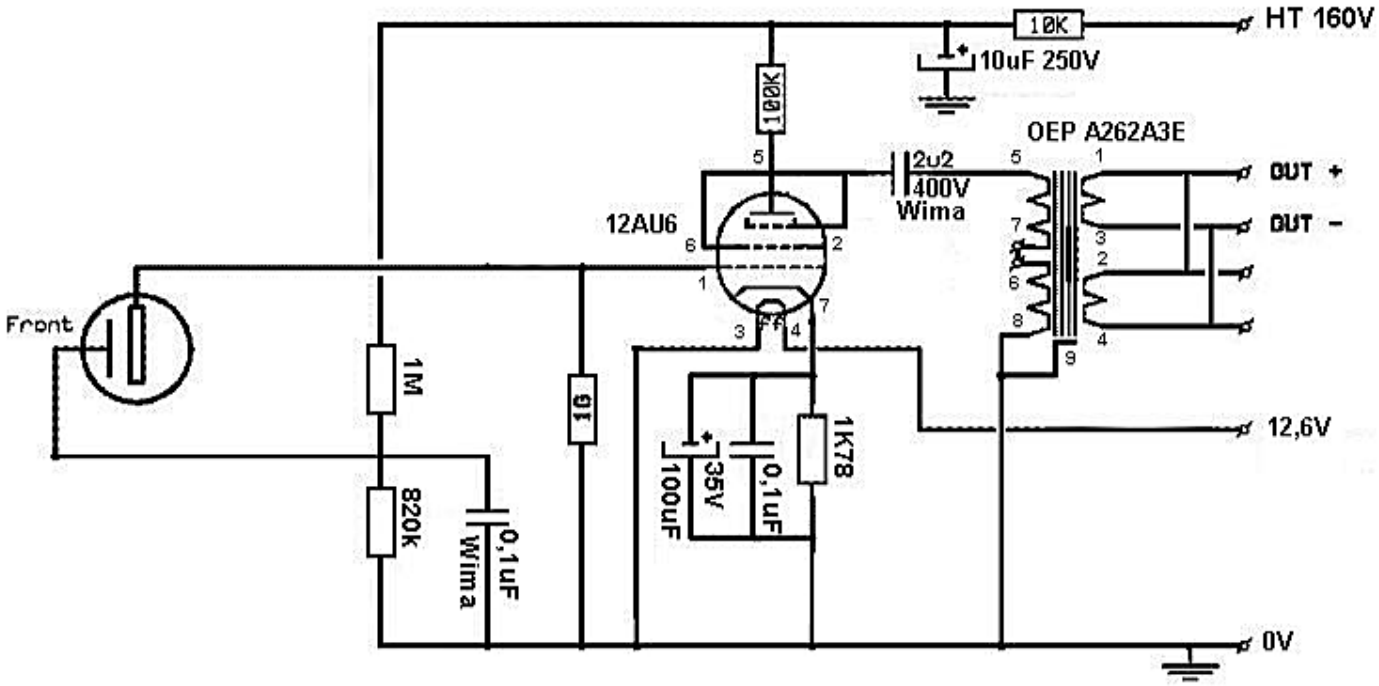
10K
HT 160V
10uF 250V
100K
OEP A262A3E
2u2
400V
Wima
12AU6
OUT +
OUT -
Front
1M
820k
0,1uF
Wima
1K
100uF
35V
0,1uF
1K78
12,6V
0V

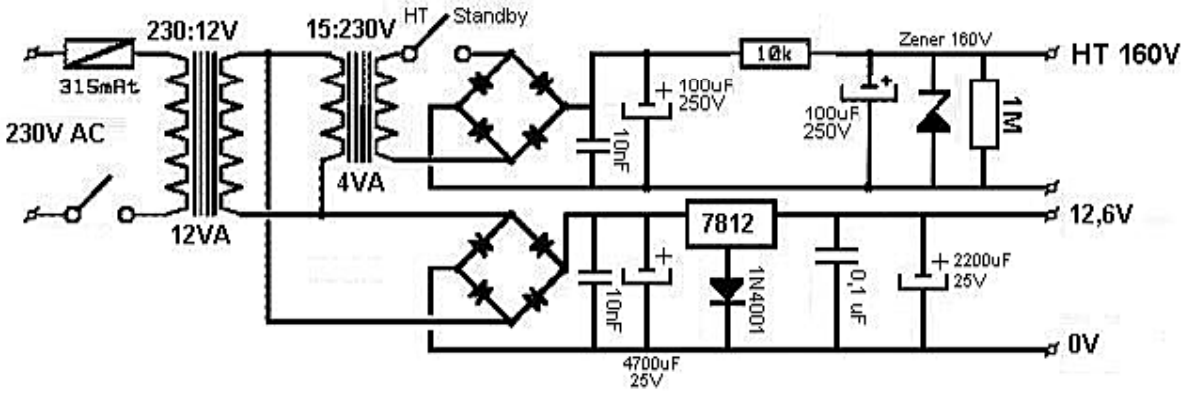
230:12V
15:230V
HT
Standby
315mAt
230V AC
4VA
12VA
10k
Zener 160V
HT 160V
100uF
250V
100uF
250V
10nF
1M
7812
12,6V
10nF
1N4001
0,1 uF
2200uF
25V
0V
4700uF
25V