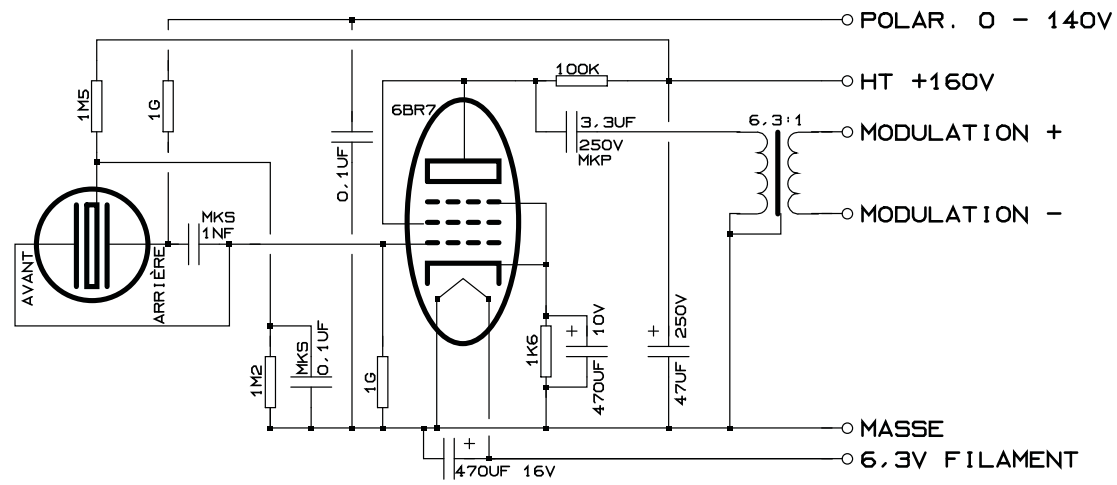
POLAR. 0 - 140V
HT +160V
MODULATION +
MODULATION -
MASSE
6,3V FILAMENT
1M5
1G
100K
6BR7
3,3UF
250V
MKP
6,3:1
0,1UF
MKS
1NF
AVANT
ARRIÈRE
1M2
MKS
0,1UF
1G
1K6
10V
470UF
250V
47UF
470UF 16V

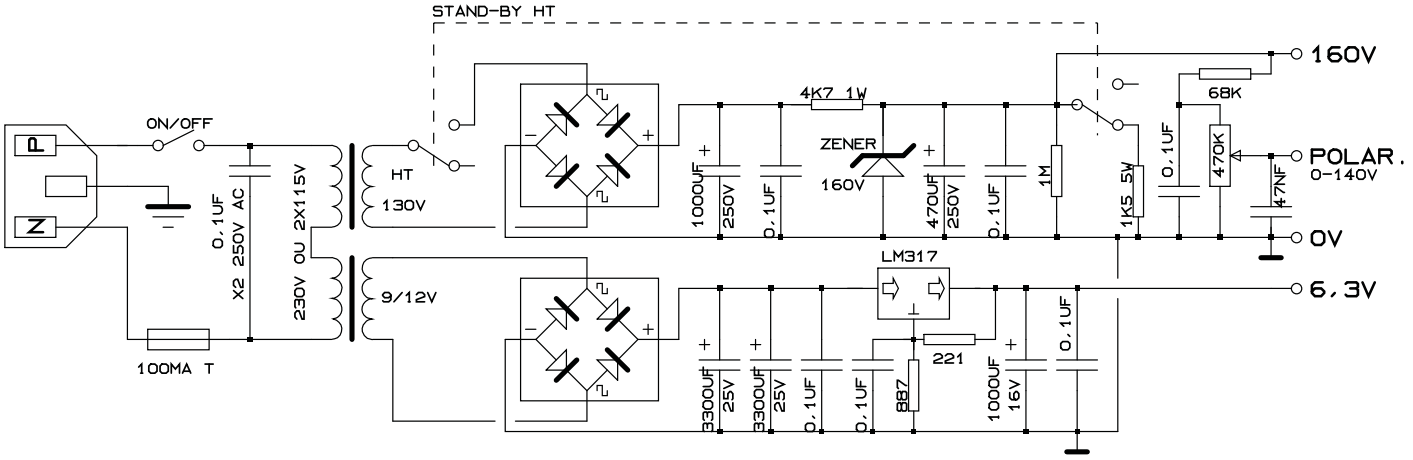
STAND-BY HT
160V
POLAR.
0-140V
0V
6,3V
ON/OFF
P
N
0,1UF
X2 250V AC
230V OU 2X115V
HT
130V
9/12V
100MA T
4K7 1W
ZENER
160V
1000UF
250V
0,1UF
470UF
250V
1M
1K5 5W
68K
470K
47NF
LM317
221
887
3300UF
25V
1000UF
16V