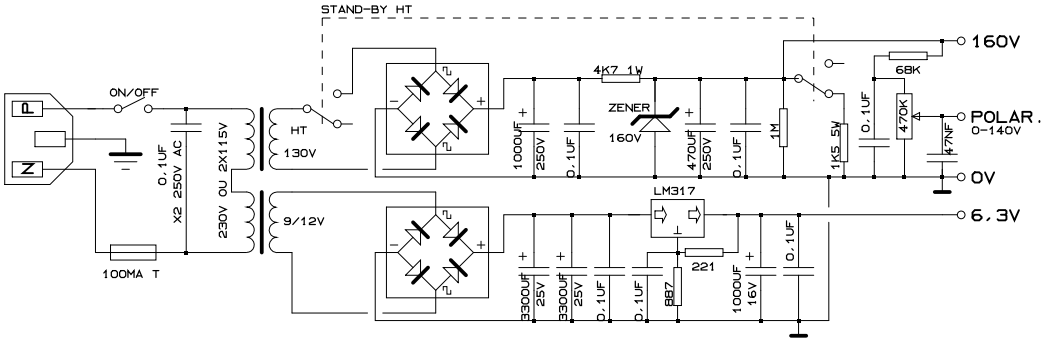
STAND-BY HT
160V
4K7 1W
68K
ON/OFF
ZENER
160V
POLAR.
0-140V
HT
130V
0V
LM317
6.3V
9/12V
221
100MA T