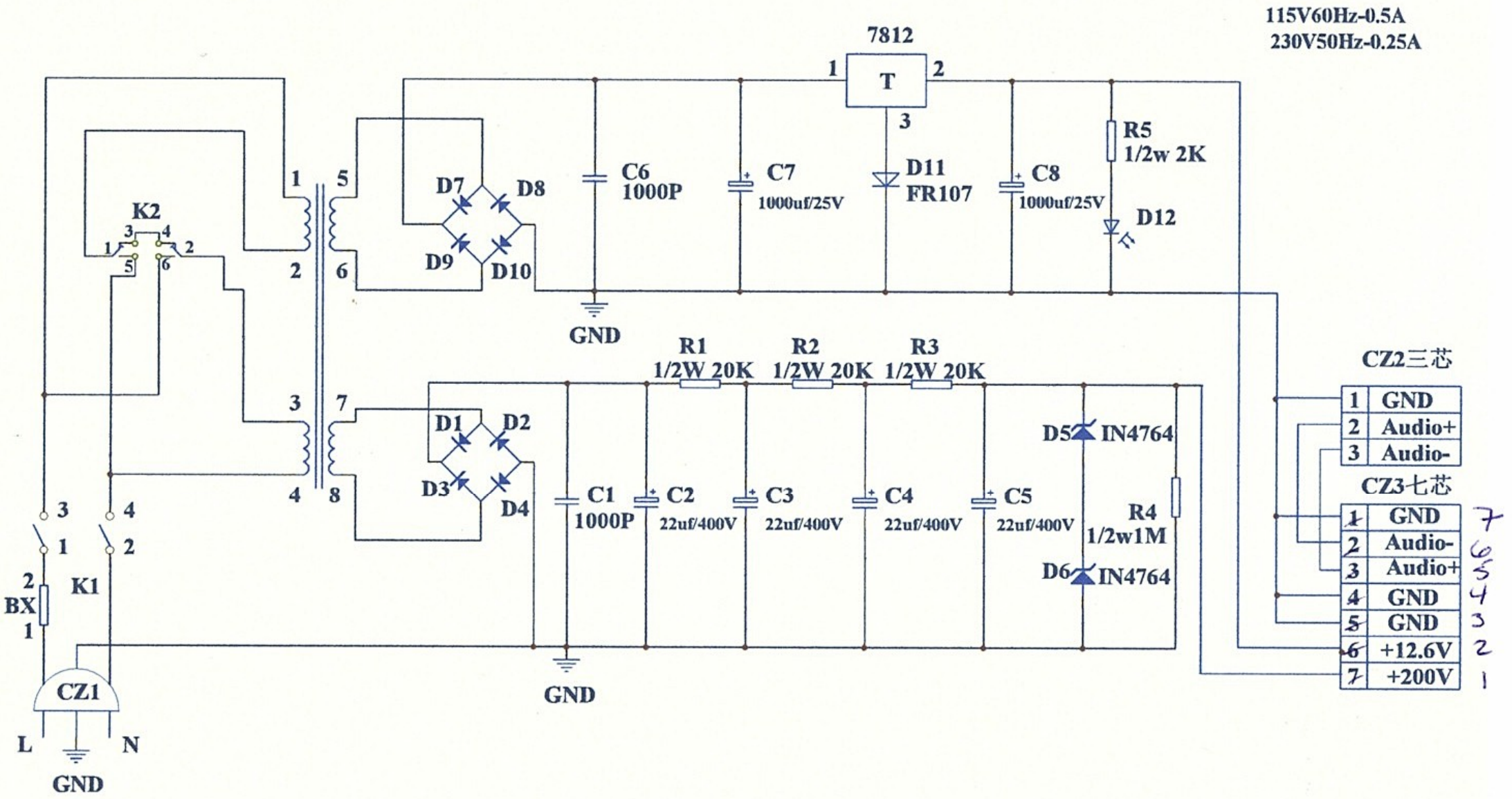
115V60Hz-0.5A
230V50Hz-0.25A
7812
T
K2
K1
BX
CZ1
L
N
GND
D1
D2
D3
D4
D5 IN4764
D6 IN4764
D7
D8
D9
D10
D11 FR107
D12
C1 1000P
C2 22uf/400V
C3 22uf/400V
C4 22uf/400V
C5 22uf/400V
C6 1000P
C7 1000uf/25V
C8 1000uf/25V
R1 1/2W 20K
R2 1/2W 20K
R3 1/2W 20K
R4 1/2w1M
R5 1/2w 2K
CZ2三芯
1 GND
2 Audio+
3 Audio-
CZ3七芯
1 GND
2 Audio-
3 Audio+
4 GND
5 GND
6 +12.6V
7 +200V
7 6 5 4 3 2 1