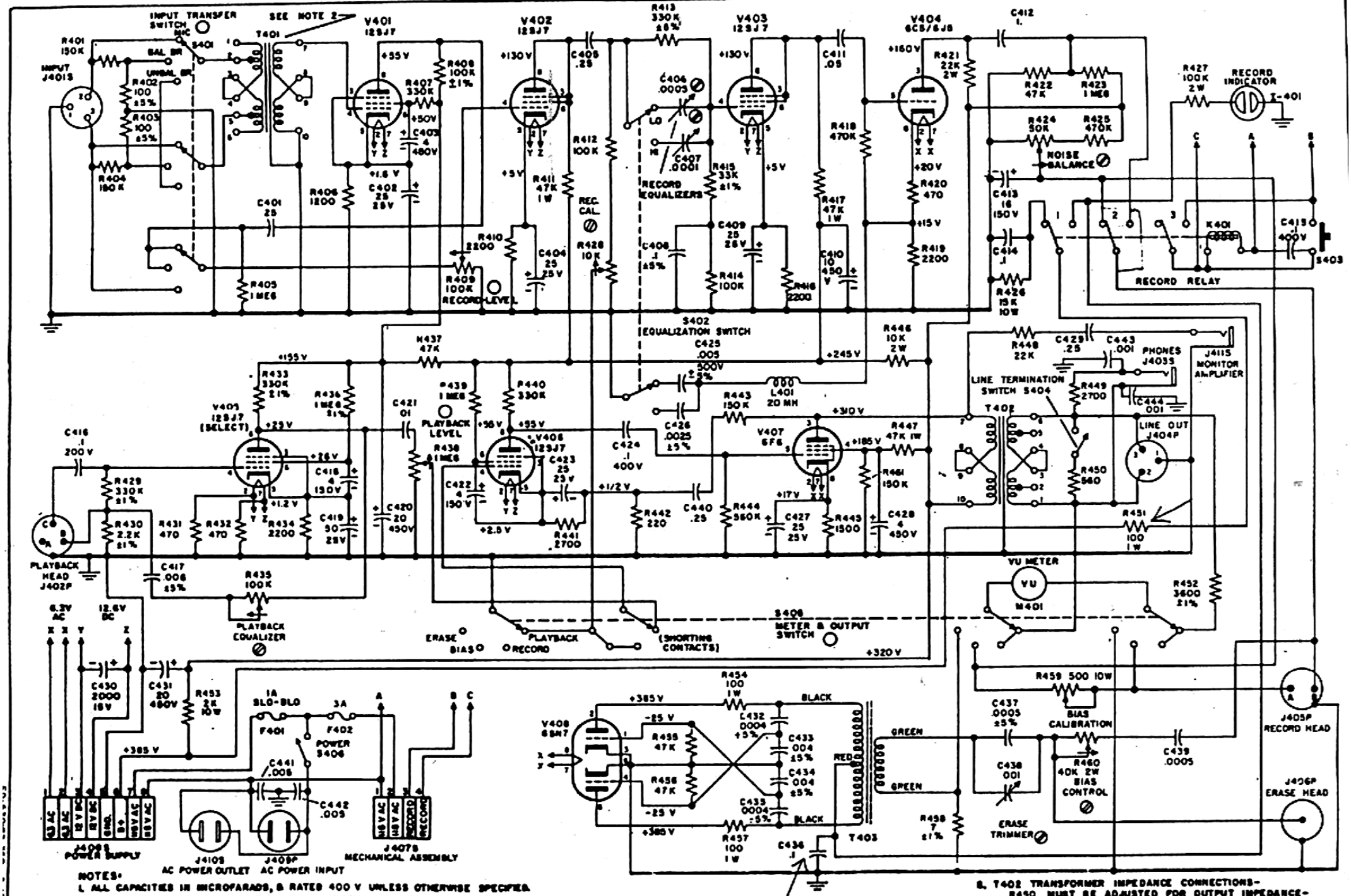

NOTES:

1. ALL CAPACITIES IN MICROFARADS, & RATED 400 V UNLESS OTHERWISE SPECIFIED.
2. FOR 30 & 50 OHMS MICROPHONE, SEE INSTALLATION.
3. ALL VOLTAGES MEASURED WITH 20,000 OHMS PER VOLT METER WITH 115 AC LINE VOLTAGE. ALL READINGS EXCEPT V408 OSCILLATOR VOLTAGES TAKEN WITH K401 DE-ENERGIZED.
4. ALL RESISTORS IN OHMS ±10%, & RATED $\frac{1}{2}$ WATT UNLESS OTHERWISE SPECIFIED.
5. T402 TRANSFORMER IMPEDANCE CONNECTIONS— R450 MUST BE ADJUSTED FOR OUTPUT IMPEDANCE—
   - 500 TO 600 OHMS CONNECT TO 1 & 6, JOIN 3 TO 4
   - 333 OHMS CONNECT TO 1 & 5, JOIN 3 TO 4
   - 200 TO 250 OHMS CONNECT TO 2 & 5, JOIN 3 TO 4
   - 125 TO 150 OHMS CONNECT TO 1 & 4, JOIN 1 TO 3 & 4 TO 6
   - 50 OHMS CONNECT TO 2 & 4, JOIN 2 TO 3 & 4 TO 5
6. ○ FRONT PANEL CONTROL; ⊘ SCREWDRIVER ADJUSTMENT

ELECTRONIC ASSEMBLY
CATALOG NO. 5701R2
AMPEX ELECTRIC CORPORATION
REDWOOD CITY, CALIFORNIA

FIG. 1