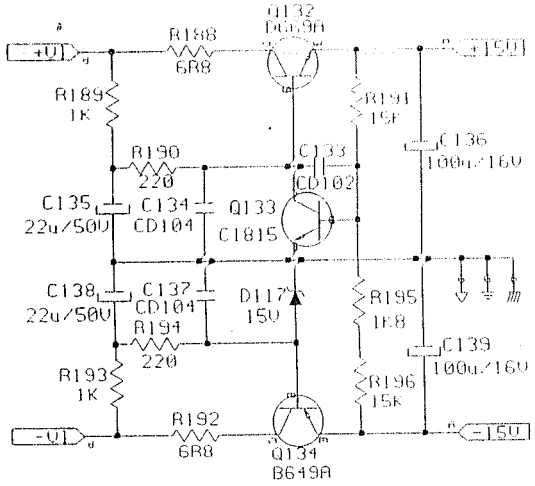

Power Supply

