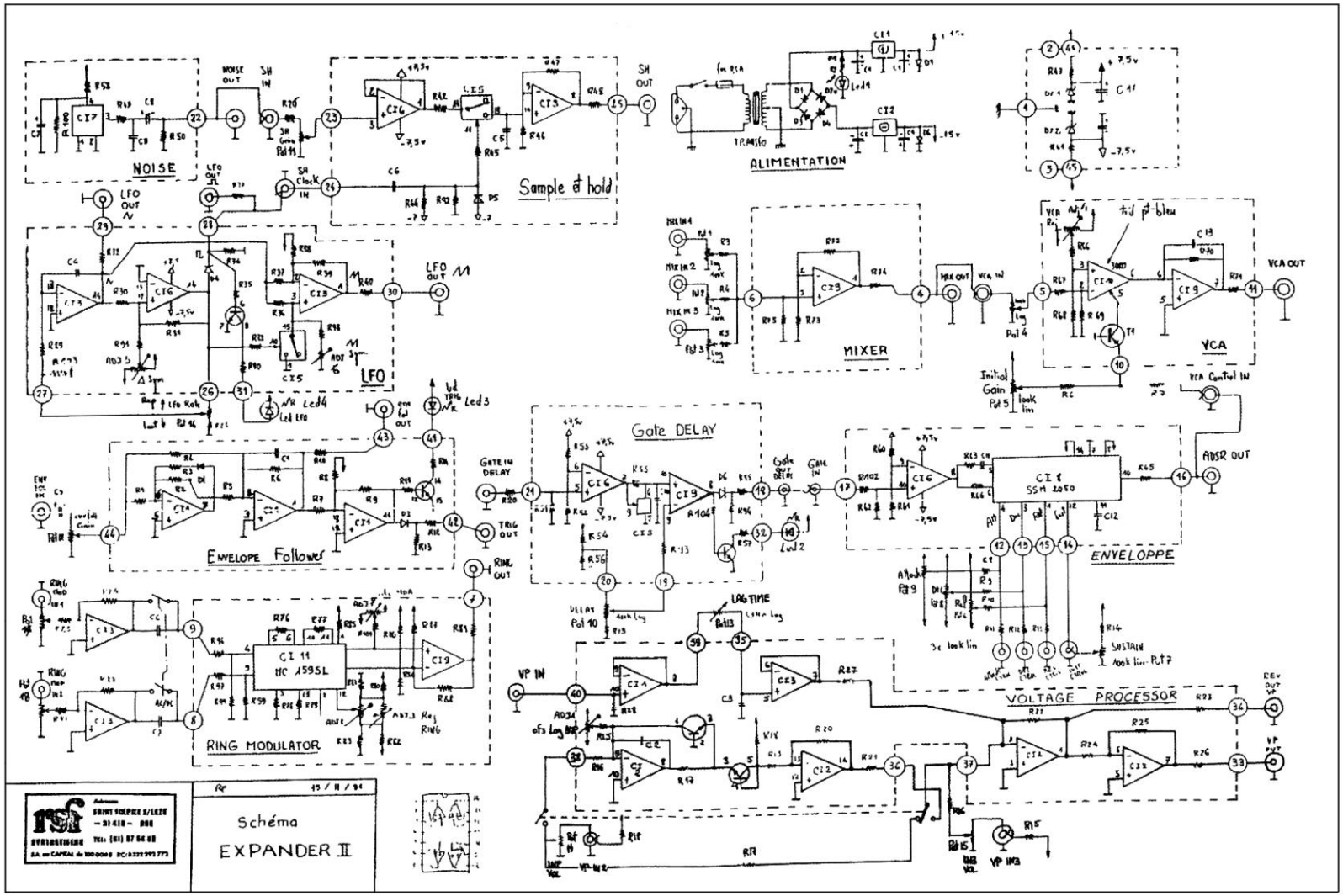
NOISE
Sample et hold
ALIMENTATION
LFO
MIXER
VCA
Gate DELAY
Envelope Follower
ENVELOPPE
RING MODULATOR
VOLTAGE PROCESSOR
Schéma
EXPANDER II